MODEL G0803
9" BENCHTOP BANDSAW
OWNER'S MANUAL
(For models manufactured since 09/15)

#WK17672 PRINTED IN CHINA V1.03.18

⚠ WARNING!

This manual provides critical safety instructions on the proper setup, operation, maintenance, and service of this machine/tool. Save this document, refer to it often, and use it to instruct other operators.

Failure to read, understand and follow the instructions in this manual may result in fire or serious personal injury—including amputation, electrocution, or death.

The owner of this machine/tool is solely responsible for its safe use. This responsibility includes but is not limited to proper installation in a safe environment, personnel training and usage authorization, proper inspection and maintenance, manual availability and comprehension, application of safety devices, cutting/sanding/grinding tool integrity, and the usage of personal protective equipment.

The manufacturer will not be held liable for injury or property damage from negligence, improper training, machine modifications or misuse.

⚠ WARNING!

Some dust created by power sanding, sawing, grinding, drilling, and other construction activities contains chemicals known to the State of California to cause cancer, birth defects or other reproductive harm. Some examples of these chemicals are:

- **Lead from lead-based paints.**
- **Crystalline silica from bricks, cement and other masonry products.**
- **Arsenic and chromium from chemically-treated lumber.**

Your risk from these exposures varies, depending on how often you do this type of work. To reduce your exposure to these chemicals: Work in a well ventilated area, and work with approved safety equipment, such as those dust masks that are specially designed to filter out microscopic particles.

Table of Contents

INTRODUCTION

Contact Info

We stand behind our machines! If you have questions or need help, contact us with the information below. Before contacting, make sure you get the **serial number** and **manufacture date** from the machine ID label. This will help us help you faster.

Grizzly Technical Support
1815 W. Battlefield
Springfield, MO 65807
Phone: (570) 546-9663
Email: techsupport@grizzly.com

We want your feedback on this manual. What did you like about it? Where could it be improved? Please take a few minutes to give us feedback.

Grizzly Documentation Manager
P.O. Box 2069
Bellingham, WA 98227-2069
Email: manuals@grizzly.com

Manual Accuracy

We are proud to provide a high-quality owner's manual with your new machine!

We made every effort to be exact with the instructions, specifications, drawings, and photographs in this manual. Sometimes we make mistakes, but our policy of continuous improvement also means that **sometimes the machine you receive is slightly different than shown in the manual**.

If you find this to be the case, and the difference between the manual and machine leaves you confused or unsure about something, check our website for an updated version. We post current manuals and manual updates for free on our website at **www.grizzly.com**.

Alternatively, you can call our Technical Support for help. Before calling, make sure you write down the **Manufacture Date** and **Serial Number** from the machine ID label (see below). This information is required for us to provide proper tech support, and it helps us determine if updated documentation is available for your machine.

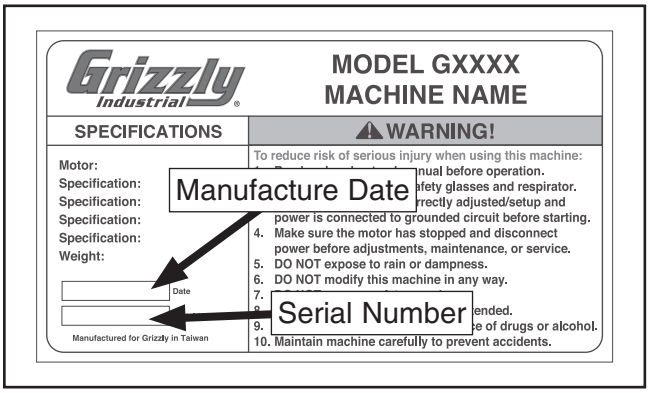

Identification

Become familiar with the names and locations of the controls and features shown below to better understand the instructions in this manual.

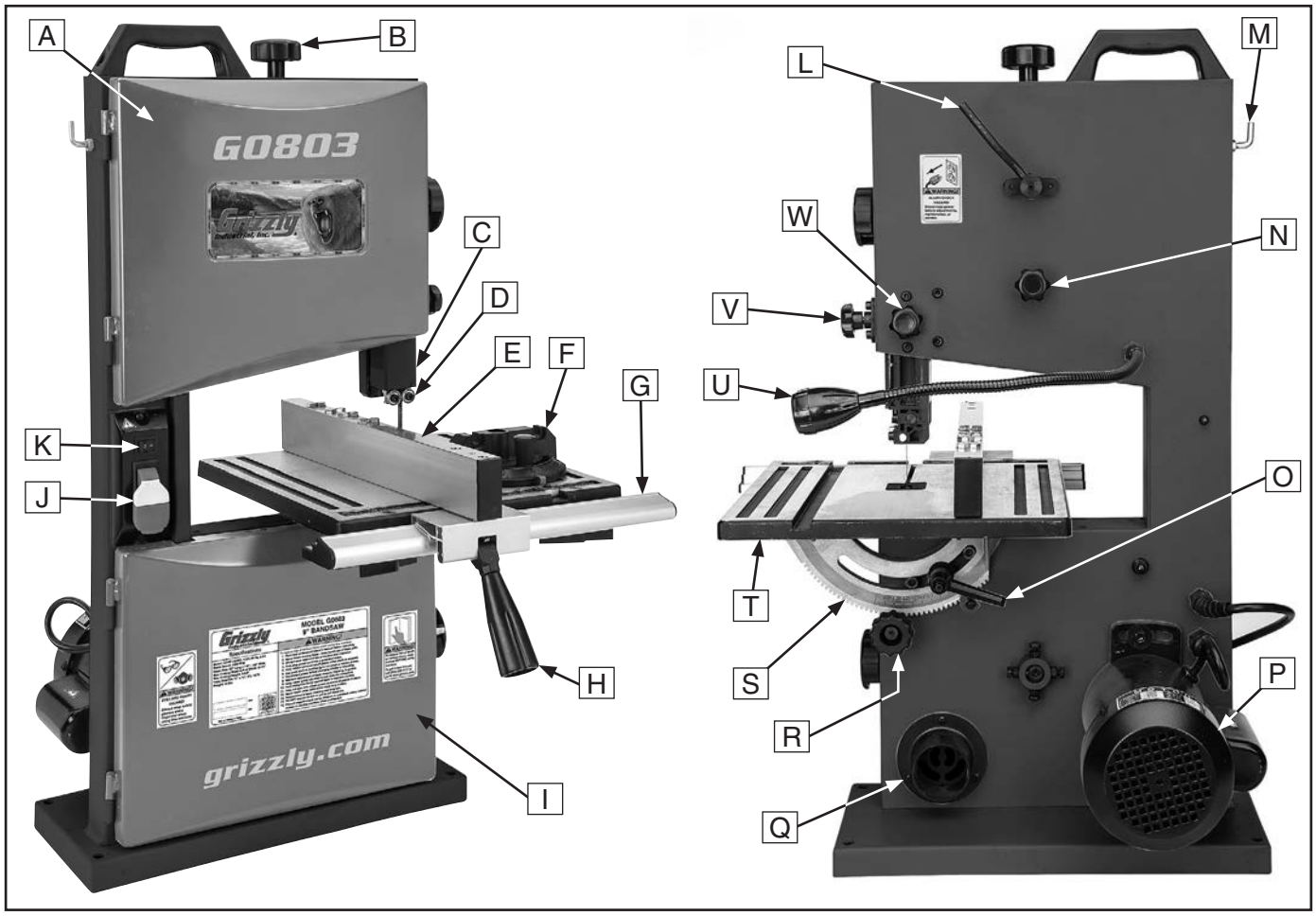

A. Upper Wheel Cover
B. Blade Tension Knob
C. Guide Post
D. Upper Blade Guide Bearings
E. Fence
F. Miter Gauge
G. Fence Rail
H. Fence Lock Handle
I. Lower Wheel Cover
J. ON/OFF Switch w/Key
K. Worklamp Switch
L. Quick-Release Lever
M. Storage Hook for Push Stick
N. Tracking Knob
O. Table Tilt Lock Lever
P. Motor
Q. 2" Dust Port
R. Table Tilt Adjustment Knob
S. Trunnion with Table Tilt Scale
T. Table
U. LED Worklamp
V. Guide Post Adjustment Knob
W. Guide Post Lock Knob

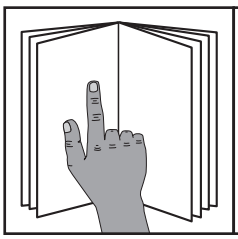

⚠WARNING

To reduce your risk of serious injury, read this entire manual BEFORE using machine.

Controls & Components

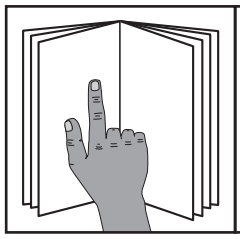

⚠WARNING

To reduce your risk of serious injury, read this entire manual BEFORE using machine.

Refer to **Figures 1–4** and the following descriptions to become familiar with the basic controls and components of this machine. Understanding these items and how they work will help you understand the rest of the manual and stay safe when operating this machine.

Fence and Miter Gauge

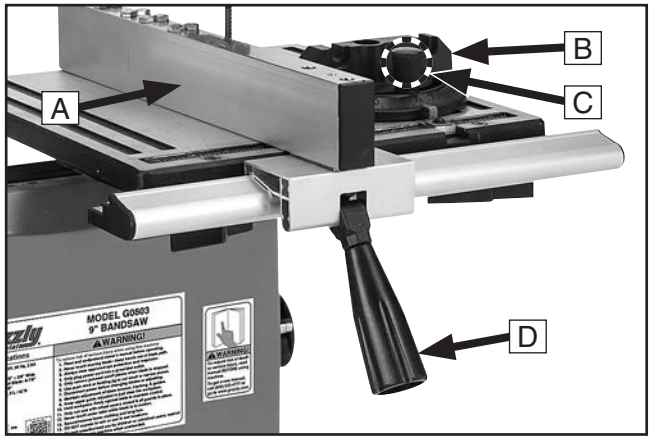

Figure 1. Fence and miter gauge controls.

A. Fence: Used for ripping, resawing, or cutting tenons. distance from blade determines width of cut.

B. Miter Gauge: Used for cross cuts. Can be adjusted 60° left or right.

C. Miter Gauge Lock Knob: Secures angle position of miter gauge.

D. Fence Lock Handle: Secures fence position.

Guide Post

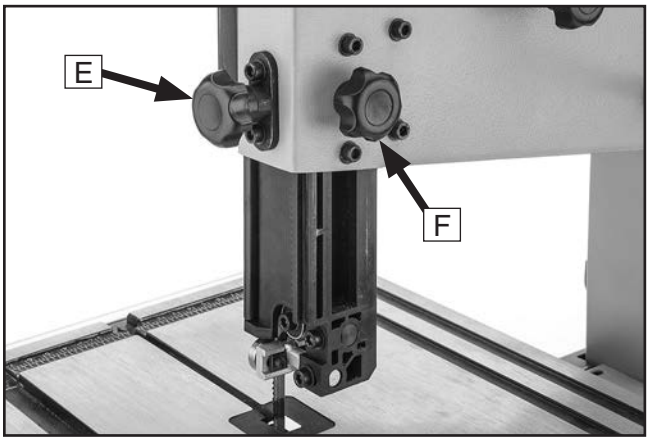

Figure 2. Guide post controls.

E. Guide Post Adjustment Knob: Rotate to adjust height of blade guides above workpiece.

F. Guide Post Lock Knob: Secures height of blade guides.

Blade Tension & Tracking

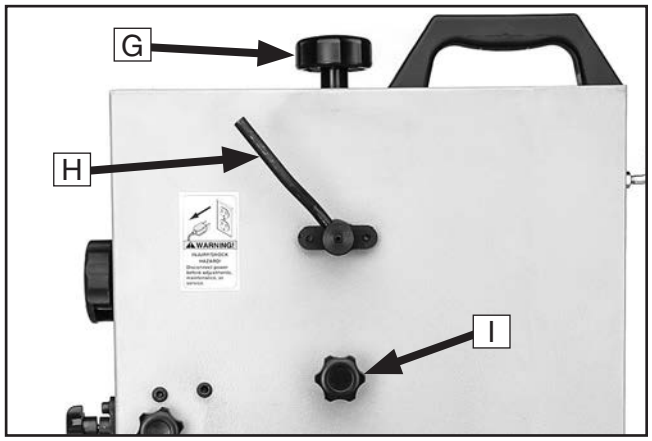

Figure 3. Blade tension and tracking controls.

G. Blade Tension Adjustment Knob: Rotate to adjust blade tension (refer to **Page 20** for more information).

H. Blade Tension Quick-Release Lever: Move counterclockwise (as viewed from rear of machine) to quickly release blade tension. Move clockwise to re-tension blade.

I. Tracking Knob: Rotate to adjust blade tracking (refer to **Page 17** for more information).

Table Tilt

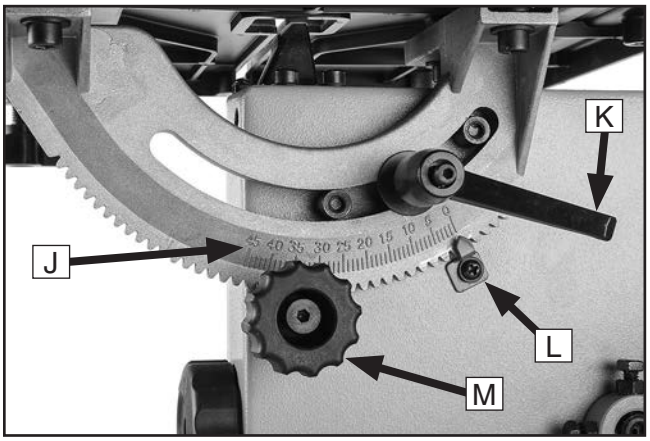

Figure 4. Table tilt controls.

J. Trunnion w/Table Tilt Scale: Functions as a tilting base for table. Graduated in degrees from 0°–45° for setting bevel angle.

K. Table Tilt Lock Lever: Secures table tilt angle setting.

L. Table Tilt Indicator: Shows angle of table tilt.

M. Table Tilt Adjustment Knob: Rotate to adjust angle of table tilt.

MACHINE DATA SHEET

Customer Service #: (570) 546-9663 · To Order Call: (800) 523-4777 · Fax #: (800) 438-5901

MODEL G0803 9" BENCHTOP BANDSAW

Product Dimensions:

Weight..... 42 lbs.
Width (side-to-side) x Depth (front-to-back) x Height..... 20-3/4 x 17 x 29-1/2 in.
Footprint (Length x Width)..... 15-1/4 x 8-3/8 in.

Shipping Dimensions:

Type..... Cardboard Box
Content..... Machine
Weight..... 49 lbs.
Length x Width x Height..... 32 x 18 x 14 in.
Must Ship Upright..... No

Electrical:

Power Requirement..... 120V, Single-Phase, 60 Hz
Full-Load Current Rating..... 2.8A
Minimum Circuit Size..... 15A
Power Cord Included..... Yes
Power Cord Length..... 72 in.
Power Cord Gauge..... 18 AWG
Plug Included..... Yes
Included Plug Type..... 5-15
Switch Type..... Paddle Safety Switch w/Removable Key

Motors:

Main

Horsepower..... 1/3 HP (320W)
Phase..... Single-Phase
Amps..... 2.8A
Speed..... 1720 RPM
Type..... ODP Induction
Power Transfer ..... Belt Drive

Main Specifications:

Main Specifications

Bandsaw Size..... 9 in.
Max Cutting Width (Left of Blade)..... 8-7/8 in.
Max Cutting Width (Left of Blade) w/Fence..... 5 in.
Max Cutting Height (Resaw Height)..... 3-5/8 in.
Blade Speeds..... 2460 FPM

Blade Information

Standard Blade Length..... 62 in.
Blade Length Range..... 61-13/16 – 62-3/16 in.
Blade Width Range..... 1/8 – 3/8 in.
Type of Blade Guides..... Ball Bearing
Guide Post Adjustment Type..... Rack & Pinion
Has Quick-Release..... Yes

Table Information

Table Length	12 in.
Table Width	12 in.
Table Thickness	5/8 in.
Table Tilt	Left 0, Right 45 deg.
Table Tilt Adjustment Type	Rack & Pinion
Floor-to-Table Height	13 in.
Fence Locking Position	Front
Miter Gauge Included	Yes

Construction Materials

Table	Cast Aluminum
Trunnion	Cast Aluminum
Fence	Extruded Aluminum
Base/Stand	Pre-Formed Steel
Frame/Body	Pre-Formed Steel
Wheels	Balanced Aluminum
Tire	Rubber
Wheel Cover	Steel
Paint Type/Finish	Urethane

Other Related Information

Wheel Diameter	9-5/16 in.
Wheel Width	3/4 in.
Number of Dust Ports	1
Dust Port Size	2 in.

Other Specifications:

Country of Origin	China
Warranty	1 Year
Approximate Assembly & Setup Time	30 Minutes
Serial Number Location	ID Label
ISO 9001 Factory	Yes

Features:

Wheels Adjustable for Alignment/Coplanarity
Rack & Pinion Table Tilt
Ball-Bearing Blade Guides
Quick-Release Blade Tension Lever
Extruded Aluminum Rip Fence with Camlock Handle
2" Dust Port
Lower Wheel Brush to Prevent Build-Up of Dust/Pitch on Wheel
Work Light
Made in an ISO 9001 Factory

Accessories Included:

Push Stick
Miter Gauge

SECTION 1: SAFETY

For Your Own Safety, Read Instruction Manual Before Operating This Machine

The purpose of safety symbols is to attract your attention to possible hazardous conditions. This manual uses a series of symbols and signal words intended to convey the level of importance of the safety messages. The progression of symbols is described below. Remember that safety messages by themselves do not eliminate danger and are not a substitute for proper accident prevention measures. Always use common sense and good judgment.

DANGER — **Indicates an imminently hazardous situation which, if not avoided, WILL result in death or serious injury.**

WARNING — **Indicates a potentially hazardous situation which, if not avoided, COULD result in death or serious injury.**

CAUTION — **Indicates a potentially hazardous situation which, if not avoided, MAY result in minor or moderate injury. It may also be used to alert against unsafe practices.**

NOTICE — **This symbol is used to alert the user to useful information about proper operation of the machine.**

Safety Instructions for Machinery

WARNING

OWNER'S MANUAL. Read and understand this owner's manual BEFORE using machine.

TRAINED OPERATORS ONLY. Untrained operators have a higher risk of being hurt or killed. Only allow trained/supervised people to use this machine. When machine is not being used, disconnect power, remove switch keys, or lock-out machine to prevent unauthorized use—especially around children. Make your workshop kid proof!

DANGEROUS ENVIRONMENTS. Do not use machinery in areas that are wet, cluttered, or have poor lighting. Operating machinery in these areas greatly increases the risk of accidents and injury.

MENTAL ALERTNESS REQUIRED. Full mental alertness is required for safe operation of machinery. Never operate under the influence of drugs or alcohol, when tired, or when distracted.

ELECTRICAL EQUIPMENT INJURY RISKS. You can be shocked, burned, or killed by touching live electrical components or improperly grounded machinery. To reduce this risk, only allow qualified service personnel to do electrical installation or repair work, and always disconnect power before accessing or exposing electrical equipment.

DISCONNECT POWER FIRST. Always disconnect machine from power supply BEFORE making adjustments, changing tooling, or servicing machine. This prevents an injury risk from unintended startup or contact with live electrical components.

EYE PROTECTION. Always wear ANSI-approved safety glasses or a face shield when operating or observing machinery to reduce the risk of eye injury or blindness from flying particles. Everyday eyeglasses are NOT approved safety glasses.

⚠WARNING

WEARING PROPER APPAREL. Do not wear clothing, apparel or jewelry that can become entangled in moving parts. Always tie back or cover long hair. Wear non-slip footwear to reduce risk of slipping and losing control or accidentally contacting cutting tool or moving parts.

HAZARDOUS DUST. Dust created by machinery operations may cause cancer, birth defects, or long-term respiratory damage. Be aware of dust hazards associated with each workpiece material. Always wear a NIOSH-approved respirator to reduce your risk.

HEARING PROTECTION. Always wear hearing protection when operating or observing loud machinery. Extended exposure to this noise without hearing protection can cause permanent hearing loss.

REMOVE ADJUSTING TOOLS. Tools left on machinery can become dangerous projectiles upon startup. Never leave chuck keys, wrenches, or any other tools on machine. Always verify removal before starting!

USE CORRECT TOOL FOR THE JOB. Only use this tool for its intended purpose—do not force it or an attachment to do a job for which it was not designed. Never make unapproved modifications—modifying tool or using it differently than intended may result in malfunction or mechanical failure that can lead to personal injury or death!

AWKWARD POSITIONS. Keep proper footing and balance at all times when operating machine. Do not overreach! Avoid awkward hand positions that make workpiece control difficult or increase the risk of accidental injury.

CHILDREN & BYSTANDERS. Keep children and bystanders at a safe distance from the work area. Stop using machine if they become a distraction.

GUARDS & COVERS. Guards and covers reduce accidental contact with moving parts or flying debris. Make sure they are properly installed, undamaged, and working correctly BEFORE operating machine.

FORCING MACHINERY. Do not force machine. It will do the job safer and better at the rate for which it was designed.

NEVER STAND ON MACHINE. Serious injury may occur if machine is tipped or if the cutting tool is unintentionally contacted.

STABLE MACHINE. Unexpected movement during operation greatly increases risk of injury or loss of control. Before starting, verify machine is stable and mobile base (if used) is locked.

USE RECOMMENDED ACCESSORIES. Consult this owner's manual or the manufacturer for recommended accessories. Using improper accessories will increase the risk of serious injury.

UNATTENDED OPERATION. To reduce the risk of accidental injury, turn machine ***OFF*** and ensure all moving parts completely stop before walking away. Never leave machine running while unattended.

MAINTAIN WITH CARE. Follow all maintenance instructions and lubrication schedules to keep machine in good working condition. A machine that is improperly maintained could malfunction, leading to serious personal injury or death.

DAMAGED PARTS. Regularly inspect machine for damaged, loose, or mis-adjusted parts—or any condition that could affect safe operation. Immediately repair/replace BEFORE operating machine. For your own safety, DO NOT operate machine with damaged parts!

MAINTAIN POWER CORDS. When disconnecting cord-connected machines from power, grab and pull the plug—NOT the cord. Pulling the cord may damage the wires inside. Do not handle cord/plug with wet hands. Avoid cord damage by keeping it away from heated surfaces, high traffic areas, harsh chemicals, and wet/damp locations.

EXPERIENCING DIFFICULTIES. If at any time you experience difficulties performing the intended operation, stop using the machine! Contact our Technical Support at (570) 546-9663.

Additional Safety for Bandsaws

⚠WARNING

Serious cuts, amputation, or death can occur from contact with the moving saw blade during operation or if blade breakage occurs. To reduce this risk, anyone operating this machine MUST completely heed the hazards and warnings below.

HAND PLACEMENT. Placing hands or fingers in line with blade during operation may result in serious injury if hands slip or workpiece moves unexpectedly. Do not position fingers or hands in line with blade, and never reach under table while blade is moving.

SMALL/NARROW WORKPIECES. If hands slip during a cut while holding small workpieces with fingers, serious personal injury could occur. Always support/feed small or narrow workpieces with push sticks, push blocks, jig, vise, or some type of clamping fixture.

BLADE SPEED. Cutting workpiece before blade is at full speed could cause blade to grab workpiece and pull hands into blade. Allow blade to reach full speed before starting cut. DO NOT start machine with workpiece contacting blade.

FEED RATE. To avoid risk of workpiece slipping and causing operator injury, always feed stock evenly and smoothly.

BLADE CONDITION. Dull blades require more effort to perform cut, increasing risk of accidents. Do not operate with dirty, dull, cracked or badly worn blades. Inspect blades for cracks and missing teeth before each use. Always maintain proper blade tension and tracking while operating.

CLEARING JAMS AND CUTOFFS. Always stop bandsaw and disconnect power before clearing scrap pieces that get stuck between blade and table insert. Use brush or push stick, not hands, to clean chips/cutoff scraps from table.

BLADE CONTROL. To avoid risk of injury due to blade contact, always allow blade to stop on its own. DO NOT try to stop or slow blade with your hand or the workpiece.

GUARDS/COVERS. Blade guards and covers protect operator from the moving bandsaw blade. The wheel covers protect operator from getting entangled with rotating wheels or other moving parts. ONLY operate this bandsaw with blade guard in proper position and wheel covers completely closed.

BLADE REPLACEMENT. To avoid mishaps that could result in operator injury, make sure blade teeth face down toward table and blade is properly tensioned and tracked before operating.

UPPER BLADE GUIDE SUPPORT. To reduce exposure of operator to blade and provide maximum blade support while cutting, keep upper blade guides adjusted to just clear workpiece.

CUTTING TECHNIQUES. To avoid blade getting pulled off wheels or accidentally breaking and striking operator, always turn bandsaw ***OFF*** and wait for blade to come to a complete stop before backing workpiece out of blade. DO NOT back workpiece away from blade while bandsaw is running. DO NOT force or twist blade while cutting, especially when sawing small curves. This could result in blade damage or breakage.

WORKPIECE SUPPORT. To maintain maximum control and reduce risk of blade contact/breakage, always ensure adequate support of long/large workpieces. Always keep workpiece flat and firm against table/fence when cutting to avoid loss of control. If necessary, use a jig or other workholding device.

WORKPIECE MATERIAL. This machine is intended for cutting natural and man-made wood products, and laminate covered wood products. This machine is NOT designed to cut metal, glass, stone, tile, etc.

SECTION 2: POWER SUPPLY

Availability

Before installing the machine, consider the availability and proximity of the required power supply circuit. If an existing circuit does not meet the requirements for this machine, a new circuit must be installed. To minimize the risk of electrocution, fire, or equipment damage, installation work and electrical wiring must be done by an electrician or qualified service personnel in accordance with all applicable codes and standards.

⚠WARNING

Electrocution, fire, shock, or equipment damage may occur if machine is not properly grounded and connected to power supply.

Full-Load Current Rating

The full-load current rating is the amperage a machine draws at 100% of the rated output power. On machines with multiple motors, this is the amperage drawn by the largest motor or sum of all motors and electrical devices that might operate at one time during normal operations.

Full-Load Current Rating at 120V .... 2.8 Amps

The full-load current is not the maximum amount of amps that the machine will draw. If the machine is overloaded, it will draw additional amps beyond the full-load rating.

If the machine is overloaded for a sufficient length of time, damage, overheating, or fire may result—especially if connected to an undersized circuit. To reduce the risk of these hazards, avoid overloading the machine during operation and make sure it is connected to a power supply circuit that meets the specified circuit requirements.

⚠WARNING

Serious injury could occur if you connect machine to power before completing setup process. DO NOT connect to power until instructed later in this manual.

120V Circuit Requirements

This machine is prewired to operate on a power supply circuit that has a verified ground and meets the following requirements:

Nominal Voltage 110V, 115V, 120V
Cycle .....60 Hz
Phase ..... Single-Phase
Power Supply Circuit ..... 15 Amps

A power supply circuit includes all electrical equipment between the breaker box or fuse panel in the building and the machine. The power supply circuit used for this machine must be sized to safely handle the full-load current drawn from the machine for an extended period of time. (If this machine is connected to a circuit protected by fuses, use a time delay fuse marked D.)

⚠CAUTION

For your own safety and protection of property, consult an electrician if you are unsure about wiring practices or electrical codes in your area.

Note: *Circuit requirements in this manual apply to a dedicated circuit—where only one machine will be running on the circuit at a time. If machine will be connected to a shared circuit where multiple machines may be running at the same time, consult an electrician or qualified service personnel to ensure circuit is properly sized for safe operation.*

Grounding & Plug Requirements

This machine MUST be grounded. In the event of certain malfunctions or breakdowns, grounding reduces the risk of electric shock by providing a path of least resistance for electric current.

This machine is equipped with a power cord that has an equipment-grounding wire and a grounding plug. Only insert plug into a matching receptacle (outlet) that is properly installed and grounded in accordance with all local codes and ordinances. DO NOT modify the provided plug!

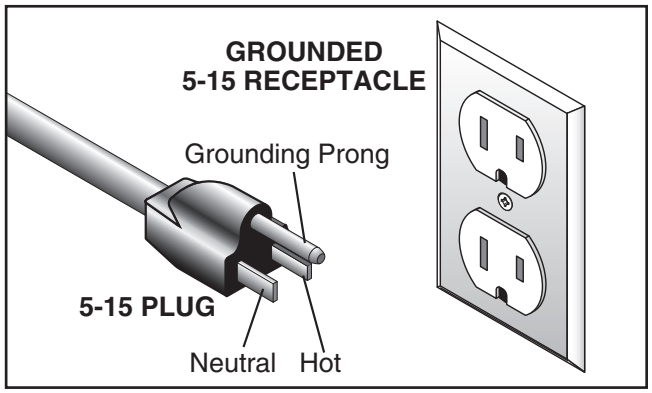

Figure 5. Typical 5-15 plug and receptacle.

⚠CAUTION

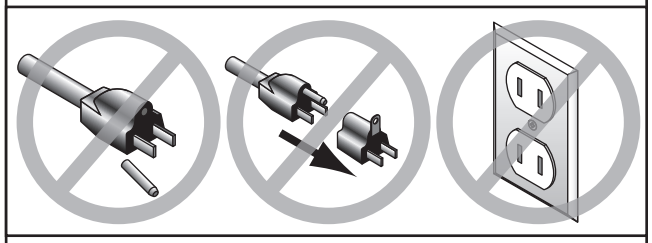

SHOCK HAZARD!
Two-prong outlets do not meet the grounding requirements for this machine. Do not modify or use an adapter on the plug provided—if it will not fit the outlet, have a qualified electrician install the proper outlet with a verified ground.

Improper connection of the equipment-grounding wire can result in a risk of electric shock. The wire with green insulation (with or without yellow stripes) is the equipment-grounding wire. If repair or replacement of the power cord or plug is necessary, do not connect the equipment-grounding wire to a live (current carrying) terminal.

Check with a qualified electrician or service personnel if you do not understand these grounding requirements, or if you are in doubt about whether the tool is properly grounded. If you ever notice that a cord or plug is damaged or worn, disconnect it from power, and immediately replace it with a new one.

Extension Cords

We do not recommend using an extension cord with this machine. If you must use an extension cord, only use it if absolutely necessary and only on a temporary basis.

Extension cords cause voltage drop, which can damage electrical components and shorten motor life. Voltage drop increases as the extension cord size gets longer and the gauge size gets smaller (higher gauge numbers indicate smaller sizes).

Any extension cord used with this machine must be in good condition and contain a ground wire and matching plug/receptacle. Additionally, it must meet the following size requirements:

Minimum Gauge Size .....16 AWG
Maximum Length (Shorter is Better).....50 ft.

SECTION 3: SETUP

Unpacking

This machine was carefully packaged for safe transport. When unpacking, separate all enclosed items from packaging materials and inspect them for shipping damage. ***If items are damaged, please call us immediately at (570) 546-9663.***

IMPORTANT: Save all packaging materials until you are completely satisfied with the machine and have resolved any issues between Grizzly or the shipping agent. *You MUST have the original packaging to file a freight claim. It is also extremely helpful if you need to return your machine later.*

⚠WARNING

SUFFOCATION HAZARD!

Keep children and pets away from plastic bags or packing materials shipped with this machine. Discard immediately.

Needed for Setup

Tools Needed	Qty
Hex Wrench 3mm	1
Hex Wrench 4mm	1
Machinist's Square	1

Inventory

The following is a list of items shipped with your machine. Before beginning setup, lay these items out and inventory them.

If any non-proprietary parts are missing (e.g. a nut or a washer), we will gladly replace them; or for the sake of expediency, replacements can be obtained at your local hardware store.

Inventory (Figure 6)		Qty
A.	Table/Trunnion Assembly	1
B.	Push Stick	1
C.	Miter Gauge Assembly	1
D.	Fence	1
E.	Fence Rail Knobs M6-1 x 16	2
F.	Fence Rail Knob M6-1 x 24	1
G.	"D" Nut M6-1	1
H.	Fence Rail	1
I.	Bandsaw Body (not shown)	1
J.	Rubber Feet (not shown)	4

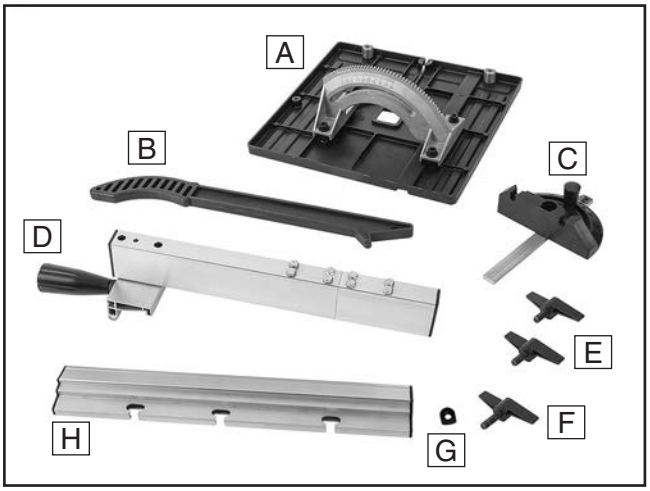

Figure 6. Loose item inventory.

NOTICE

If you cannot find an item on this list, carefully check around/inside the machine and packaging materials. Often, these items get lost in packaging materials while unpacking or they are pre-installed at the factory.

Site Considerations

Workbench Load

Refer to the **Machine Data Sheet** for the weight and footprint specifications of your machine. Some workbenches may require additional reinforcement to support the weight of the machine and workpiece materials.

Placement Location

Consider anticipated workpiece sizes and additional space needed for auxiliary stands, work tables, or other machinery when establishing a location for this machine in the shop. Below is the minimum amount of space needed for the machine.

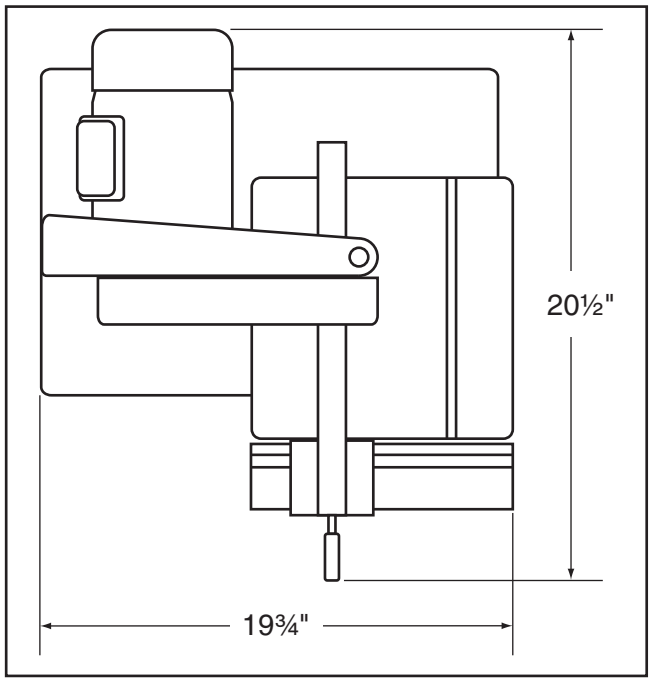

Figure 7. Minimum working clearances.

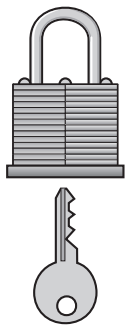

⚠CAUTION

Children and visitors may be seriously injured if unsupervised around this machine. Lock entrances to the shop or disable start switch or power connection to prevent unsupervised use.

Bench Mounting

Number of Mounting Holes 4
Diameter of Mounting Hardware Needed .. ⅜"

The base of this machine has mounting holes that allow it to be fastened to a workbench or other mounting surface to prevent it from moving during operation and causing accidental injury or damage.

The strongest mounting option is a "Through Mount" (see example below) where holes are drilled all the way through the workbench—and hex bolts, washers, and hex nuts are used to secure the machine in place.

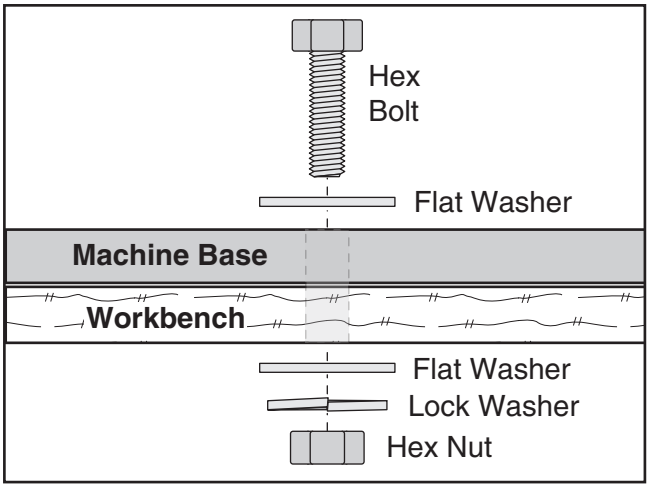

Figure 8. "Through Mount" setup.

Another option is a "direct mount" (see example below) where the machine is secured directly to the workbench with lag screws and washers.

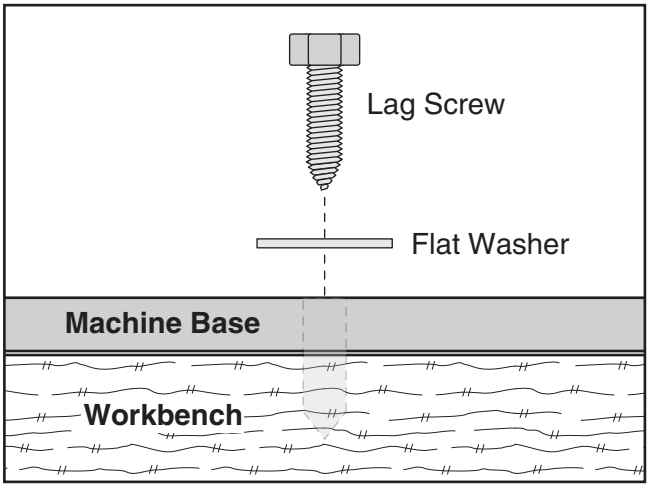

Figure 9. "Direct Mount" setup.

Assembly

⚠CAUTION

LACERATION HAZARD! Bandsaw blades and some sheet metal parts are sharp. Wear heavy leather gloves while handling to reduce risk of being cut.

To assemble bandsaw:

1. Remove table tilt lock lever and adjustment knob, then loosen indicator and position it down, out of the way (see **Figure 10**).

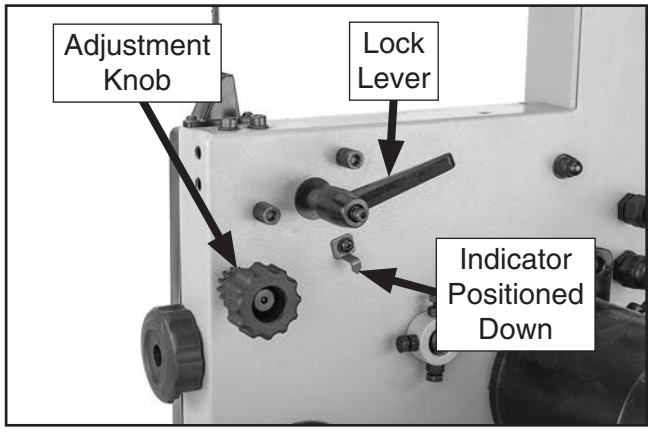

Figure 10. Location of table controls that must be removed or adjusted.

2. Slide gap in table around blade, and mount table/trunnion assembly to main saw body as shown in **Figure 11**.

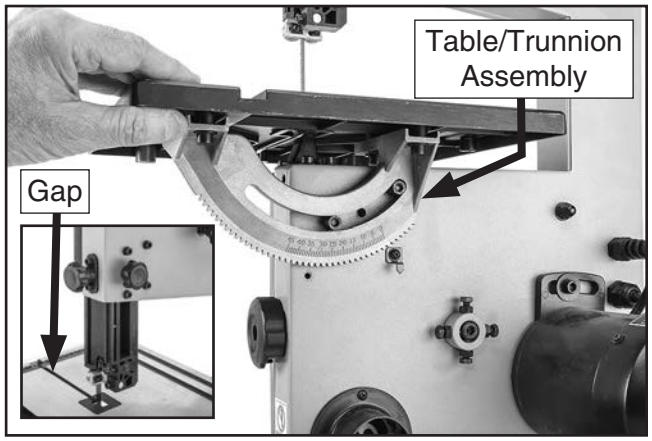

Figure 11. Table/trunnion positioned on saw.

3. Re-install adjustment knob and lock lever. Do not fully tighten yet.

4. Completely raise upper blade guide assembly, then place a 90° square flat on table, against side of blade.

5. Use adjustment knob to tilt table until square is flat against side of blade, as illustrated in **Figure 12**.

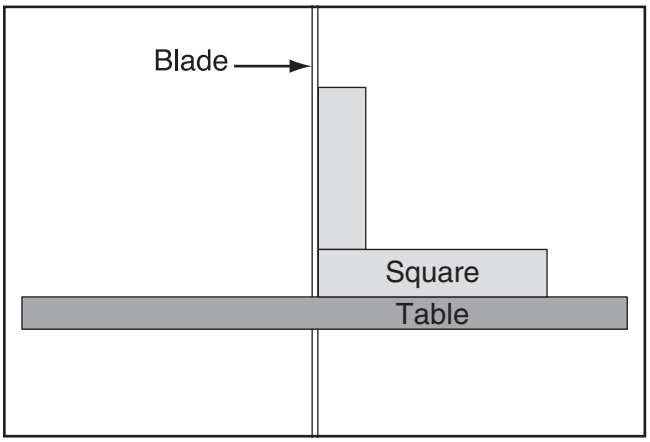

Figure 12. Using a square to adjust table perpendicular to the side of blade.

6. Use lock lever to secure table perpendicular to blade, then aim indicator to "0" on table tilt scale and tighten screw (see **Figure 13**).

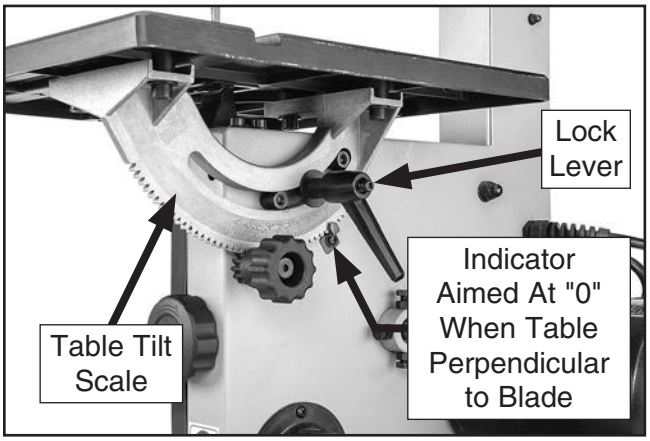

Figure 13. Table tilt controls re-installed.

7. Thread (2) M6-1 x 16 fence rail knobs into table just enough so they will not fall out. Do not tighten yet (see **Figure 14**).

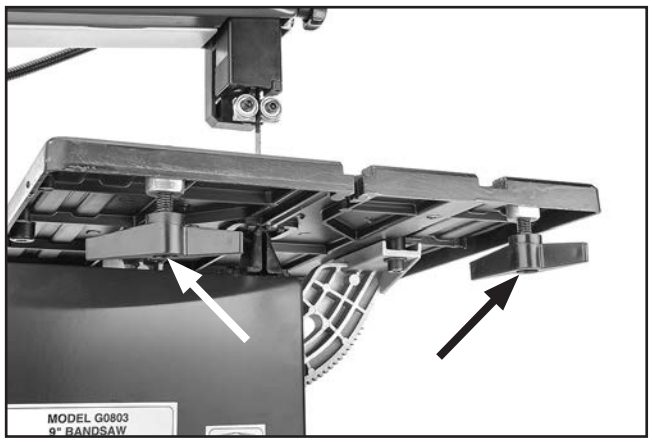

Figure 14. M6-1 x 16 fence rail knobs installed.

8. Slide fence rail notches over knob threads (see **Figure 15**), then tighten knobs to secure fence rail snug against edge of table.

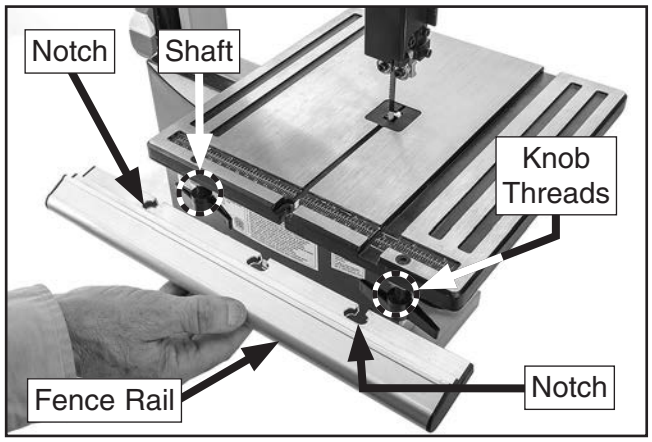

Figure 15. Installing fence rail.

9. Insert "D" nut into slot shown in **Figure 16**.

10. Thread M6-1 x 24 fence rail knob up through middle notch of fence rail, into "D" nut, and tighten.

11. Pull fence lock lever up and place fence assembly onto fence rail, making sure it snaps into place, then push lock lever down to secure fence (see **Figure 16**).

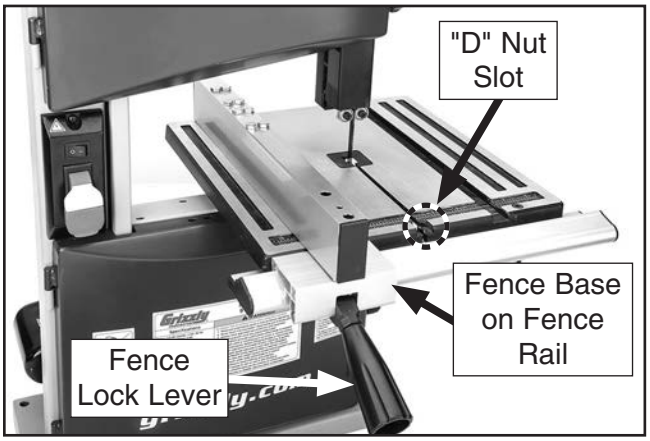

Figure 16. Fence installed on fence rail.

Adjustment Overview

The bandsaw is one of the most versatile woodworking machines. However, it has multiple components that must be properly adjusted for the best cutting results.

For practical and safety reasons, some adjustments and test operations must be performed before performing other necessary adjustments. Below is an overview of all the adjustments and the order in which they should be performed:

1. Blade Tracking
2. Dust Collection
3. Test Run
4. Tension Blade
5. Adjusting Blade Support Bearings
6. Adjusting Blade Guide Bearings
7. Table Tilt Calibration
8. Aligning Table
9. Aligning Fence

Blade Tracking

"Tracking" refers to how the blade rides on the bandsaw wheels. Proper tracking is important for maintaining bandsaw adjustments, achieving correct blade tension, and cutting accurately. Improper tracking reduces cutting accuracy, causes excess vibrations, and places stress on the blade and other bandsaw components. The shape of the wheels and the orientation of the wheels in relation to each other determine how the blade tracks.

Bandsaw wheels are either flat or crowned and both shapes track differently. The G0803 has crowned wheels. As the wheels spin, a properly tracking blade naturally tracks at the center of the wheel (see **Figure 17**).

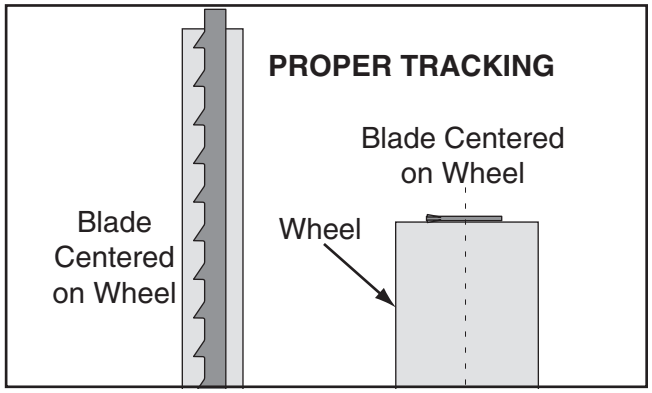

Figure 17. Blade centered on crown of wheel.

The bandsaw wheels must be aligned for optimal machine performance. Properly aligned wheels are parallel and coplanar (see **Figure 18**).

Improper blade tension and cutting practices can negatively affect blade tracking. Familiarizing yourself with the ideas and conditions described in **Figure 18** will help you recognize when your wheel alignment may need to be adjusted (refer to **Wheel Alignment** on **Page 44** for detailed instructions on adjusting the tracking).

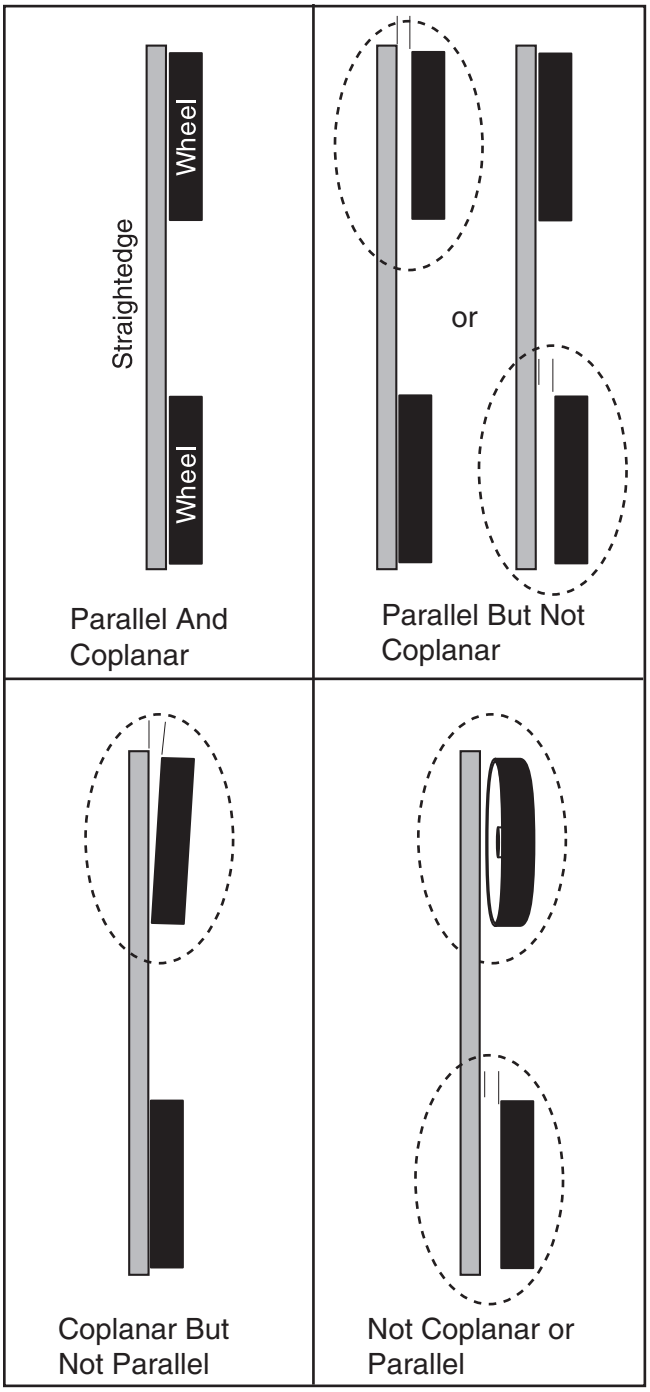

Figure 18. Wheel alignment and misalignment examples.

The wheels on the G0803 were aligned at the factory, so center tracking is the only adjustment that needs to be performed when the saw is new. This adjustment is necessary before turning the saw on or performing other adjustments.

To adjust blade tracking:

1. DISCONNECT MACHINE FROM POWER!

2. Adjust upper and lower blade guides away from blade and raise upper guides all the way up (refer to **Adjusting Blade Guide Bearings** on **Page 23** for detailed instructions).

   Note: *When adjusting the blade tracking for the test run in this procedure, the blade must have approximately the same amount of tension as when under operating conditions. After the test run is successfully completed, you will be instructed on how to more accurately tension the blade for optimum results.*

3. Move quick-release lever all the way clockwise (as viewed from the rear of the machine) to apply tension to blade (see **Figure 19**).

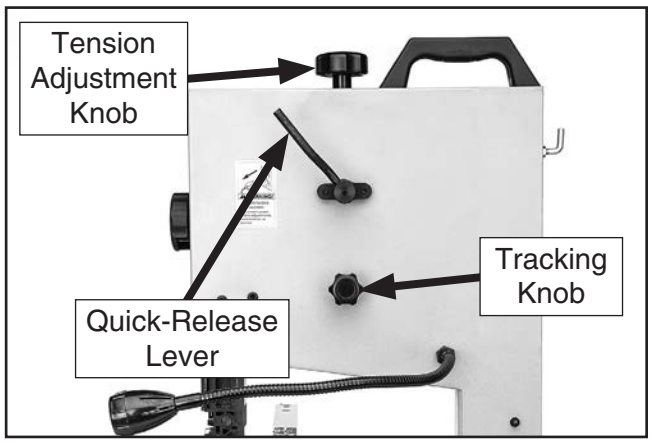

Figure 19. Blade tension and tracking controls.

4. Open upper wheel cover.

5. Rotate tension adjustment knob clockwise until there is approximately ¼" deflection in blade when pushed with moderate pressure.

6. Rotate upper wheel by hand several times and watch how blade rides on wheel (see **Figure 17** on **Page 17** for an illustration of this concept).

   —If the blade rides in the center of the upper wheel, it is properly tracking and you are done with this procedure—proceed to **Dust Collection** on **Page 19**.

   —If the blade does *not* ride in the center of the upper wheel, it is not properly tracking; continue with the next step to adjust it.

7. Spin upper wheel with one hand and slowly adjust tracking knob (see **Figure 19**) with other hand until blade consistently tracks in center of wheel.

8. Close and secure upper wheel cover before operating bandsaw.

Dust Collection

⚠CAUTION

This machine creates a lot of wood chips/dust during operation. Breathing airborne dust on a regular basis can result in permanent respiratory illness. Reduce your risk by wearing a respirator and capturing the dust with a dust collection system.

Recommended CFM at Dust Port: 100 CFM
Do not confuse this CFM recommendation with the rating of the dust collector. To determine the CFM at the dust port, you must consider these variables: (1) CFM rating of the dust collector, (2) hose type and length between the dust collector and the machine, (3) number of branches or wyes, and (4) amount of other open lines throughout the system. Explaining how to calculate these variables is beyond the scope of this manual. Consult an expert or purchase a good dust collection "how-to" book.

To connect a dust collection hose:

1. Fit dust hose over 2" dust port, as shown in **Figure 20**, and secure it in place with a hose clamp.

2. Gently pull hose to make sure it does not come off. A tight fit is necessary for proper performance.

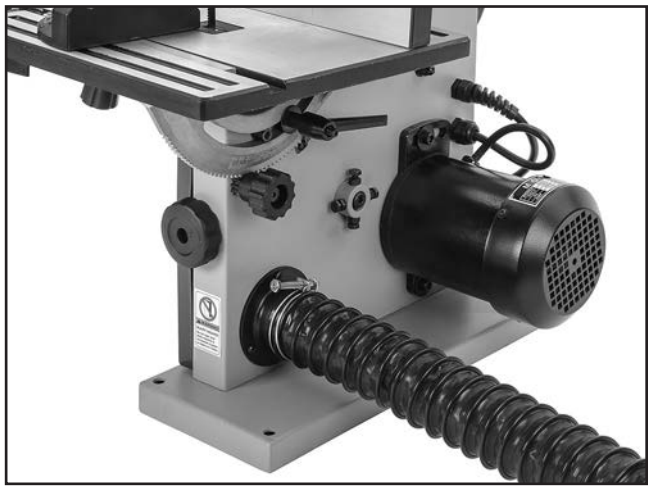

Figure 20. 2" dust hose attached to dust port.

Test Run

Once assembly is complete, test run the machine to ensure it is properly connected to power and safety components are functioning correctly.

If you find an unusual problem during the test run, immediately stop the machine, disconnect it from power, and fix the problem BEFORE operating the machine again. The **Troubleshooting** table in the **SERVICE** section of this manual can help.

The test run consists of verifying the following: 1) The motor powers up and runs correctly, and 2) the safety disabling mechanism on the switch works correctly.

⚠WARNING

Serious injury or death can result from using this machine BEFORE understanding its controls and related safety information. DO NOT operate, or allow others to operate, machine until the information is understood.

⚠WARNING

DO NOT start machine until all preceding setup instructions have been performed. Operating an improperly set up machine may result in malfunction or unexpected results that can lead to serious injury, death, or machine/property damage.

To test run machine:

1. Clear all setup tools away from machine.

2. Connect machine to power supply.

3. Turn machine ***ON***, verify motor operation, then turn machine ***OFF***.

   The motor should run smoothly and without unusual problems or noises.

4. Remove switch disabling key, as shown in **Figure 21**.

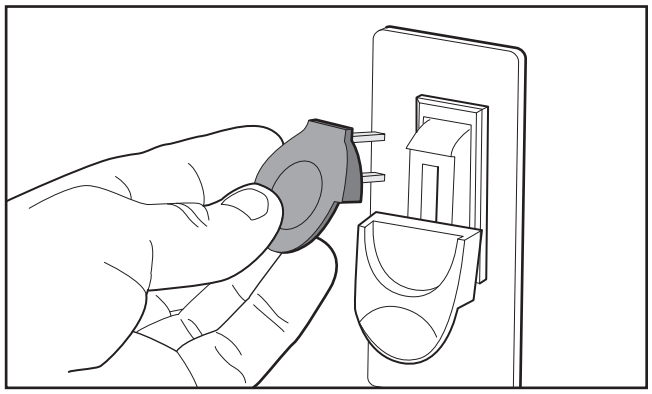

Figure 21. Removing switch key from paddle switch.

5. Try to start machine with paddle switch. The machine should not start.

   —If the machine *does not* start, the switch disabling feature is working as designed.

   —If the machine *does start*, immediately stop the machine. The switch disabling feature is not working correctly. This safety feature must work properly before proceeding with regular operations. Call Tech Support for help.

Tensioning Blade

A properly tensioned blade is essential for making accurate cuts, maximizing the blade life, and making other bandsaw adjustments. However, a properly tensioned blade will not compensate for cutting problems caused by excessive feed rate, hardness variations between workpieces, and improper blade selection.

Optimal cutting results for any type of workpiece are achieved through a combination of correct blade selection, proper blade tension, properly adjusted blade guides and other bandsaw components, and using an appropriate feed rate.

Improper blade tension is unsafe, produces inaccurate and inconsistent results, and introduces unnecessary wear on bandsaw components. Over-tensioning the blade increases the chance of the blade breaking or wheel misalignment. Under-tensioned blades wander excessively while cutting and will not track properly during operation.

The method used to tension the blade is often a matter of preference. This manual describes two methods: the flutter method and the deflection method. Either method will help you properly tension the blade. Experience and personal preference will help you decide which method your prefer.

Note: *Tensioning the blade before the* ***Test Run*** *was an approximate tension. The following procedures fine-tune the blade tension.*

The Flutter Method

Using the flutter method, you intentionally loosen the blade until it just passes the point of being too loose (when it begins to flutter). Then you gradually tighten the blade until proper tension is reached.

To tension bandsaw blade using flutter method.

1. DISCONNECT MACHINE FROM POWER!
2. Make sure blade is properly tracking as instructed in **Blade Tracking** subsection on **Page 17**.
3. Raise guide post all the way, and move upper and lower guide bearings away from blade.
4. Engage blade tension quick-release lever to apply tension to blade.
5. Connect bandsaw to power, then turn it ***ON***.
6. Using blade tension adjustment knob, slowly decrease blade tension until you see the blade start to flutter.
7. Slowly increase tension until blade stops fluttering, then tighten blade tension adjustment knob an additional ⅛ to ¼ of a turn.
8. DISCONNECT MACHINE FROM POWER!
9. Adjust blade guides as described in **Adjusting Blade Support Bearings** and **Adjusting Blade Guide Bearings** on **Pages 22–23**.

The Deflection Method

The deflection method is much more subjective than the flutter method. Each blade will deflect differently and every user will determine what "moderate pressure" means. The following are general guidelines for tensioning the blade with this method.

To tension bandsaw blade using deflection method:

1. DISCONNECT MACHINE FROM POWER!
2. Make sure blade is properly tracking as instructed in **Blade Tracking** subsection on **Page 17**.
3. Raise guide post all the way and move upper and lower guide bearings away from blade.
4. Engage blade tension quick-release lever to apply tension to blade.
5. Using moderate pressure, push center of the blade sideways.

   —If the blade deflects approximately ¼", it is properly tensioned. Proceed to **Step 7**.

   —If the blade deflects less than ¼", it is over-tensioned. Turn the blade tensioning knob counter clockwise two full turns and repeat **Step 6**.

   —If the blade deflects ¼" or more, the blade is not properly tensioned. Apply tension to the blade incrementally and repeat **Step 6** until properly tensioned.
6. Adjust blade guides as described in **Adjusting Blade Support Bearings** and **Adjusting Blade Guide Bearings** on **Pages 22–23**.

Adjusting Blade Support Bearings

The support bearings are positioned behind the blade near the blade guides and prevent the blade from pushing backward during cutting operations. Proper adjustment of the support bearings helps you make accurate cuts and prevents the blade teeth from coming in contact with the blade guides while cutting. If this happens the blade "tooth set" can be ruined, which will greatly reduce the blade's ability to make good cuts.

There are support bearings on the upper and lower blade guide assemblies. Both adjust in the same manner. The following instructions refer to the upper support bearings. To access the lower support bearing, you must open the lower wheel cover (see **Page 3** for reference).

Important: *To ensure best results while cutting, make sure the blade is tracking and tensioned correctly before performing this procedure.*

Tool Needed	**Qty**
Hex Wrench 4mm	1
Feeler Gauge 0.016" (or Dollar Bill)	1

To adjust support bearings:

1. DISCONNECT MACHINE FROM POWER!

2. Open blade cover and loosen support bearing adjustment screw (see **Figure 22**).

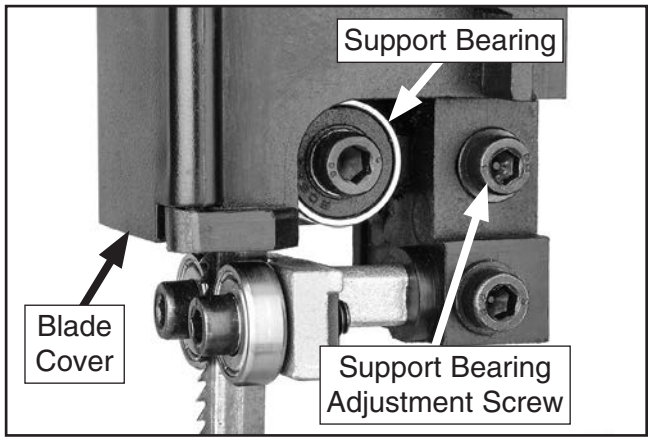

Figure 22. Upper support bearing assembly and controls.

3. Position support bearing approximately 0.016" away from the back of the blade, as illustrated in **Figure 23**. This can be measured with a feeler gauge or a dollar bill.

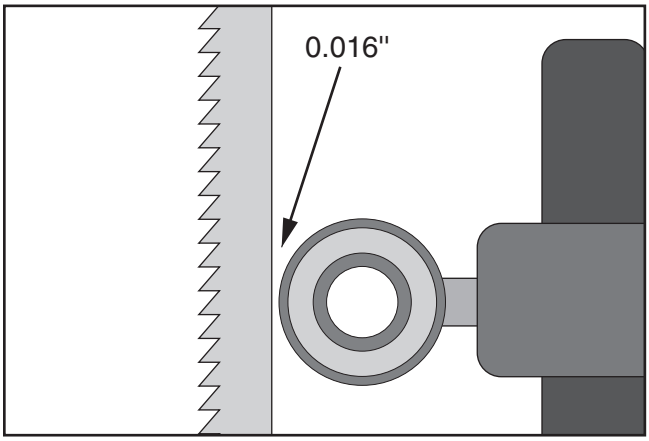

Figure 23. Bearing positioned 0.016" away from back of blade.

Tip: *To quickly measure this setting, fold a crisp dollar bill in half twice (when folded tightly, four thicknesses of a dollar bill is approximately 0.016"). Place the folded dollar bill between the support bearing and the blade, as shown in **Figure 24**.*

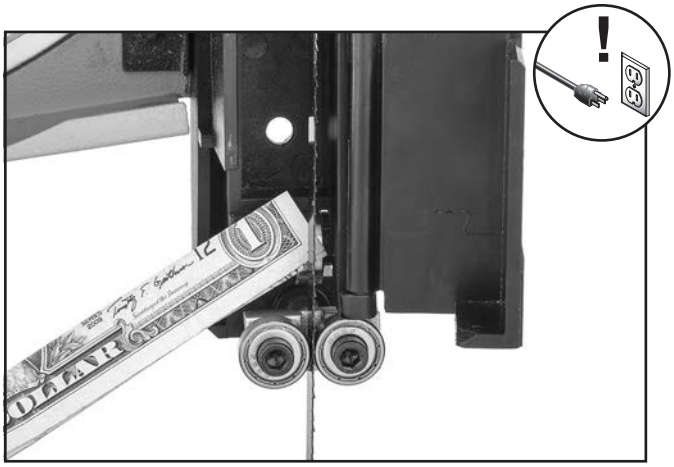

Figure 24. Dollar bill folded twice to make a quick 0.016" gauge.

4. Tighten adjustment cap screw to lock support bearing in place.

Note: *When securing adjustment of lower support bearing, make sure it is parallel to blade.*

Adjusting Blade Guide Bearings

Properly adjusting the blade guides provides side-to-side support to help keep the blade straight while cutting.

There are blade guide bearings on the upper and lower blade guide assemblies. Both adjust in the same manner. The following instructions refer to the upper guide bearings. To access the lower guide bearings, you must open the lower wheel guard (see **Page 3** for reference).

Important: *Make sure the blade is tracking and tensioned correctly before performing this procedure (see **Tensioning Blade** on **Page 20**).*

Tool Needed	Qty
Hex Wrench 4mm	1

To adjust blade guides:

1. DISCONNECT MACHINE FROM POWER!

2. Loosen guide block cap screw shown in **Figure 25**, then laterally position guide bearings just behind blade gullets, as illustrated in **Figure 26**, then re-tighten cap screw to secure setting.

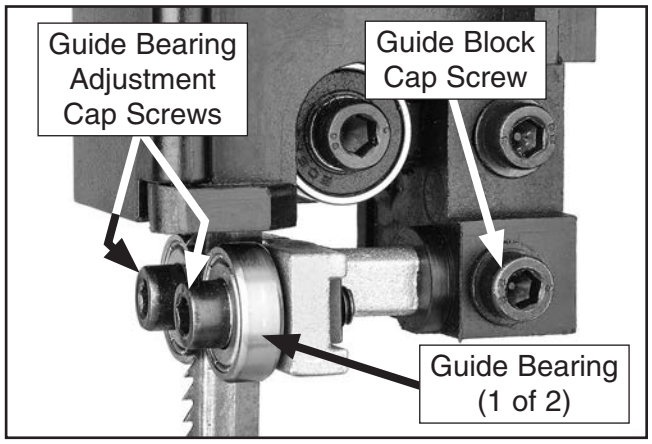

Figure 25. Upper guide bearing components.

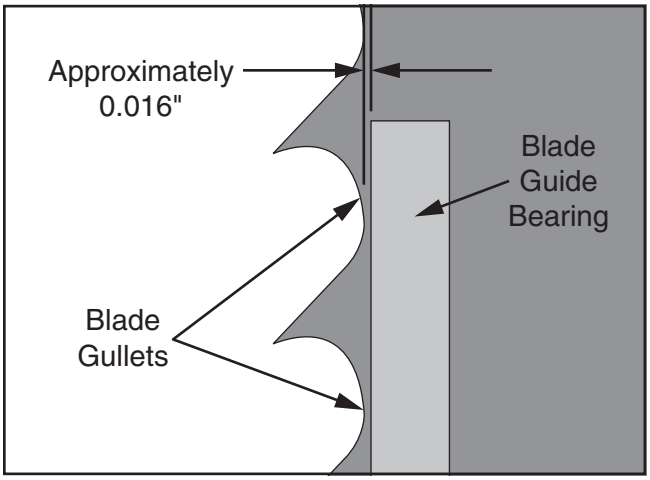

Figure 26. Blade guide bearing positioned just behind blade gullets.

Note: *With wider blades, it may not be possible to bring the guide bearings just behind the blade gullets. Position them as far forward as possible without allowing the guide bearing housing to touch the back of the blade.*

NOTICE

Blade teeth are angled out slightly, protruding wider than the blade thickness; this is known as blade "tooth set" (see Figure 27). If teeth contact guide bearings during operation, damage may occur. Therefore, the support bearing must be set to prevent teeth from contacting guide bearings during operation (refer to Page 22 for details).

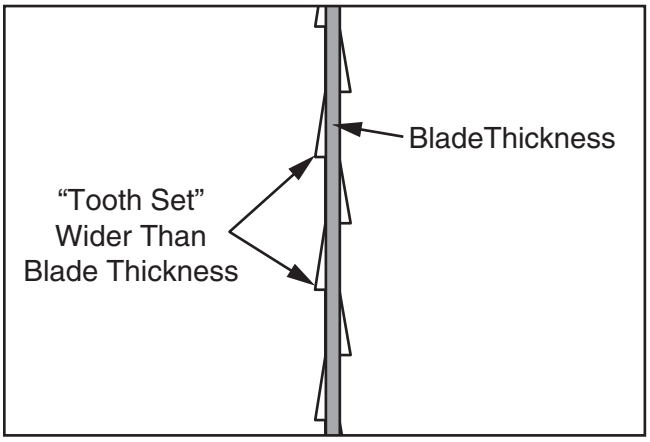

Figure 27. Illustration of blade "tooth set".

3. Loosen both guide bearing adjustment cap screws (see **Figure 25**), then position guide bearings so they evenly and lightly touch sides of blade (see illustration in **Figure 28**) without deflecting it one way or the other.

   Note: *When the blade guide bearings are properly adjusted against the blade, they should lightly rotate as the blade moves.*

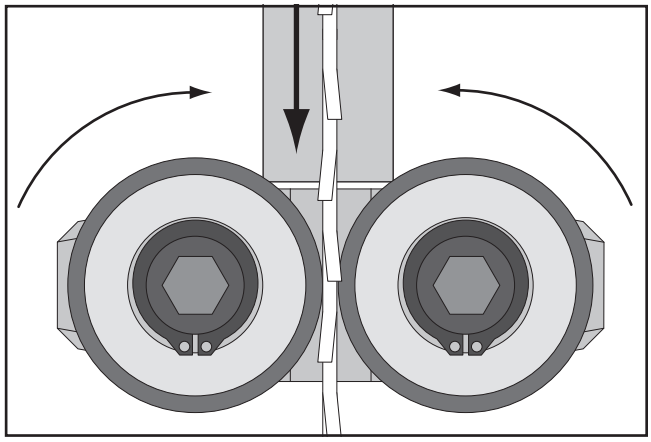

Figure 28. Blade guide bearings evenly and lightly touching the sides of the blade.

4. Re-tighten cap screws to secure settings. Re-check the setting after tightening.

NOTICE

Whenever changing blade or adjusting blade tension or tracking, the support and guide bearings must be re-adjusted before resuming operation to ensure proper blade support.

Calibrating Miter Slot with Blade

To ensure cutting accuracy, the table must be carefully positioned so the miter slot is parallel with the bandsaw blade.

Before beginning this procedure, make sure blade is correctly tensioned as described in the **Tensioning Blade** subsection earlier in this manual.

Tip: *This procedure is easier if done with the widest possible blade installed.*

Tools Needed	**Qty**
Straightedge or Carpenter's Square	1
Fine Ruler	1
Hex Wrench 6mm	1

To align table miter slot parallel to blade:

1. DISCONNECT MACHINE FROM POWER!

2. Make sure table is perpendicular to side of blade and is locked in place.

3. Place an accurate straightedge along blade. The straightedge should lightly touch both front and back of blade (see **Figure 29**).

   Note: *Make sure straightedge does not go across a tooth while performing this step.*

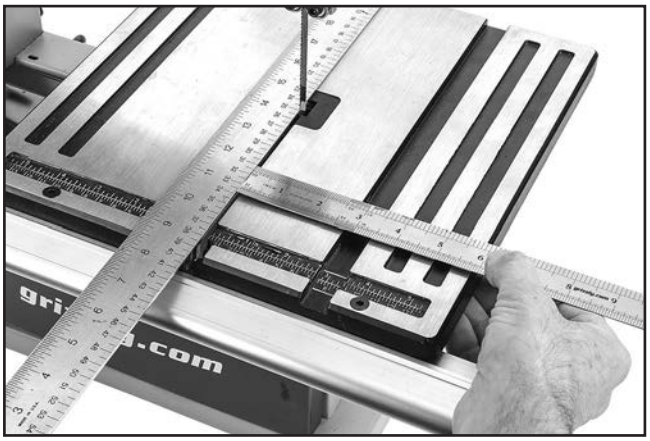

Figure 29. Placing a straightedge along the blade and measuring to the miter slot.

4. Use fine ruler to measure distance between straightedge and miter slot at front and back of table (see **Figure 29** on **Page 24**).

   —If the distances are the same, no further adjustments are required.

   —If the distances are different, continue with **Step 6**.

5. Loosen the four cap screws securing table to trunnion brackets (see **Figure 30**).

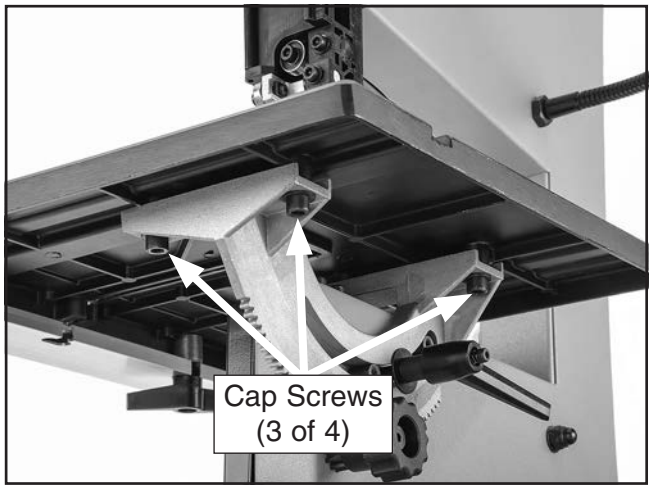

Figure 30. Location of trunnion bracket flange bolts.

6. Position table so distances are equal between straightedge and miter slot at front and back of table.

7. Taking care not to move table, re-tighten cap screws.

8. Verify setting and, if necessary, repeat this procedure until you are satisfied with adjustment.

Calibrating Fence with Miter Slot

To ensure accurate cutting when using the fence, the face of the fence must be parallel to the table miter slot and, thus, to the side of the blade.

Before beginning this procedure, make sure miter slot is parallel with blade, as instructed in previous **Aligning Table** procedure.

Tools Needed	**Qty**
Hex Wrench 4mm	1

To align fence parallel with miter slot:

1. DISCONNECT MACHINE FROM POWER!

2. Install fence on right side of blade, even with edge of miter slot, then lock it in place.

   —If the fence is parallel with the miter slot, no additional adjustment is necessary.

   —If the fence is not parallel with the miter slot, proceed to **Step 4**.

3. Loosen two fence adjustment cap screws shown in **Figure 31**, adjust fence parallel with miter slot, then re-tighten cap screws to secure setting.

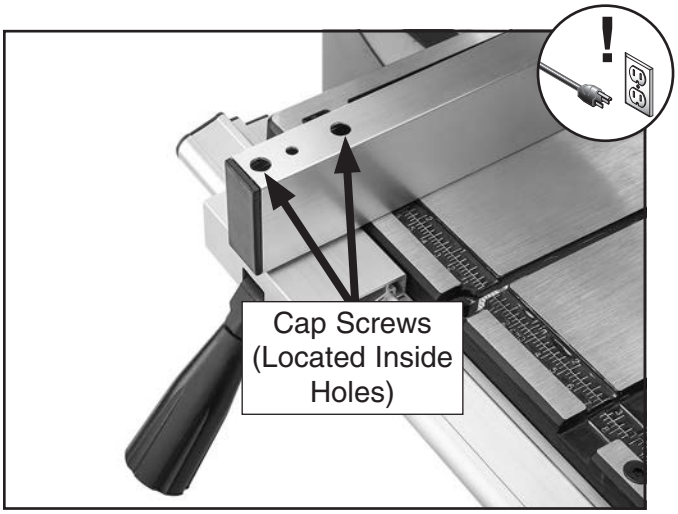

Figure 31. Location of the fence adjustment cap screws.

SECTION 4: OPERATIONS

Operation Overview

The purpose of this overview is to provide the novice machine operator with a basic understanding of how the machine is used during operation, so the machine controls/components discussed later in this manual are easier to understand.

Due to the generic nature of this overview, it is **not** intended to be an instructional guide. To learn more about specific operations, read this entire manual, seek additional training from experienced machine operators, and do additional research outside of this manual by reading "how-to" books, trade magazines, or websites.

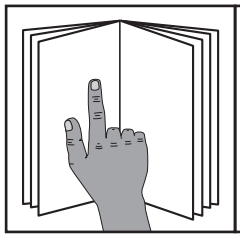

WARNING

To reduce your risk of serious injury, read this entire manual BEFORE using machine.

WARNING

To reduce risk of eye injury from flying chips or lung damage from breathing dust, always wear safety glasses and a respirator when operating this machine.

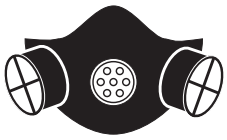

NOTICE

If you are not experienced with this type of machine, WE STRONGLY RECOMMEND that you seek additional training outside of this manual. Read books/magazines or get formal training before beginning any projects. Regardless of the content in this section, Grizzly Industrial will not be held liable for accidents caused by lack of training.

To complete a typical operation, the operator does the following:

1. Examines the workpiece to make sure it is suitable for cutting.

2. Adjusts the table tilt, if necessary, to the correct angle of the desired cut.

3. If using the fence, adjusts it for the width of the cut and then locks it in place. If using the miter gauge, adjusts the angle and locks it in place.

4. Loosens the guide post lock knob, adjusts the upper blade guide height to just clear the workpiece (no more than ¼"), then retightens the guide post lock knob.

5. Checks to make sure the workpiece can safely pass all the way through the blade without interference from other objects.

6. Puts on safety glasses and a respirator.

7. Starts the dust collector and bandsaw.

8. Holds the workpiece firmly and flatly against both the table and fence (or miter gauge), and then pushes the workpiece into the blade at a steady and controlled rate until the cut is complete.

   The operator is very careful to keep fingers away from the blade and uses a push stick to feed narrow workpieces.

9. Stops the bandsaw.

A properly adjusted bandsaw can be safer to operate than most other saws and performs many types of cuts with ease and accuracy. It is capable of performing the following types of cuts:

Straight Cuts

- Miters
- Angles
- Compound Angles
- Resawing
- Ripping
- Crosscutting

Irregular Cuts

- Simple and Complex Curves
- Duplicate Parts
- Circles
- Beveled Curves

Basic Cutting Tips

Here are some basic tips to follow when operating the bandsaw:

- Replace, sharpen, and clean blades often for best performance. Check guides, tension, and alignment settings periodically and adjust when necessary to keep the saw running in top condition.

- Use light and even pressure while cutting. Light feeding pressure makes it easier to cut straight and prevents undue friction or strain on the bandsaw components and the blade.

- Avoid twisting the blade when cutting around tight corners. Allow the blade to saw its way around the corners. Always use relief cuts when possible.

- Misusing the saw or using incorrect techniques (e.g. twisting the blade with the workpiece, incorrect feed rate, etc.) is unsafe and results in poor cuts.

Disabling Switch

The switch can be disabled by removing the key, as shown below. Disabling the switch in this manner can prevent unauthorized operation of the machine, which is important if it is not kept inside an access-restricted building or in a location where children may be present.

IMPORTANT: Disabling the switch only restricts its function. It is not a substitute for disconnecting machine from power when adjusting or servicing.

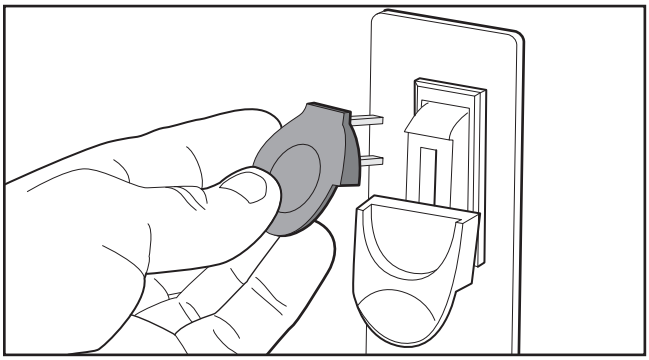

Figure 32. Disabling switch by removing key.

⚠WARNING

Children or untrained people can be seriously injured by this machine. This risk increases with unsupervised operation. To help prevent unsupervised operation, always disable switch before leaving machine unattended. Make sure to place key in a well-hidden or secure location!

Workpiece Inspection

Some workpieces are not safe to cut or may require modification before they are safe to cut. **Before cutting, inspect all workpieces for the following:**

- ***Material Type:*** This machine is intended for cutting natural and man-made wood products, laminate covered wood products, and some plastics. Cutting drywall or cementious backer board creates extremely fine dust and may reduce the life of the bearings. This machine is NOT designed to cut metal, glass, stone, tile, etc.; cutting these materials with a table saw may lead to injury.

- ***Foreign Objects:*** Nails, staples, dirt, rocks and other foreign objects are often embedded in wood. While cutting, these objects can become dislodged and hit the operator, cause kickback, or break the blade, which might then fly apart. Always visually inspect your workpiece for these items. If they can't be removed, DO NOT cut the workpiece.

- ***Large/Loose Knots:*** Loose knots can become dislodged during the cutting operation. Large knots can cause kickback and machine damage. Choose workpieces that do not have large/loose knots or plan ahead to avoid cutting through them.

- ***Wet or "Green" Stock:*** Cutting wood with a moisture content over 20% causes unnecessary wear on the blades, increases the risk of kickback, and yields poor results.

- ***Excessive Warping:*** Workpieces with excessive cupping, bowing, or twisting are dangerous to cut because they are unstable and often unpredictable when being cut. DO NOT use workpieces with these characteristics!

- ***Minor Warping:*** Workpieces with slight cupping can be safely supported if the cupped side is facing the table or the fence. On the contrary, a workpiece supported on the bowed side will rock during a cut and could cause kickback or severe injury.

Setting Upper Blade Guide Height

When cutting, the blade guides must always be positioned so they just clear (no more than ¼") the workpiece. The guide post, shown in **Figure 33**, allows the upper blade guide assembly to be quickly adjusted for height.

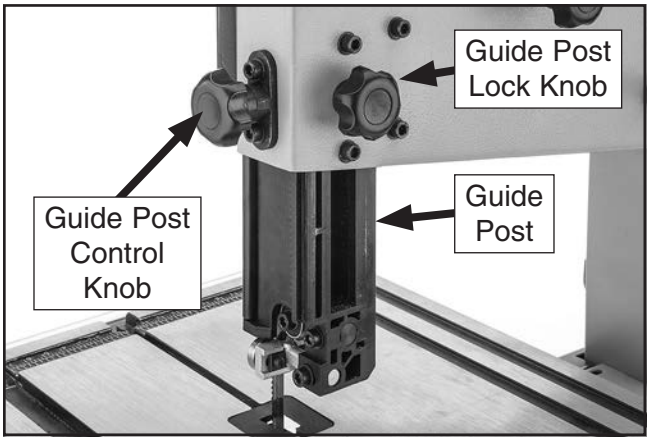

Figure 33. Guide post, lock, and control knobs.

To adjust height of upper blade guides:

1. DISCONNECT MACHINE FROM POWER!

2. Loosen guide post lock knob.

3. Using guide post control knob, adjust height of the guide post so that blade guide assembly just clears (no more than ¼") workpiece.

4. Re-tighten lock knob to secure setting.

Tilting Table

The table can be tilted to make angled or beveled cuts. A simple tilt scale is provided on the trunnion for a quick gauge (see **Figure 34**). For more accurate results use a protractor.

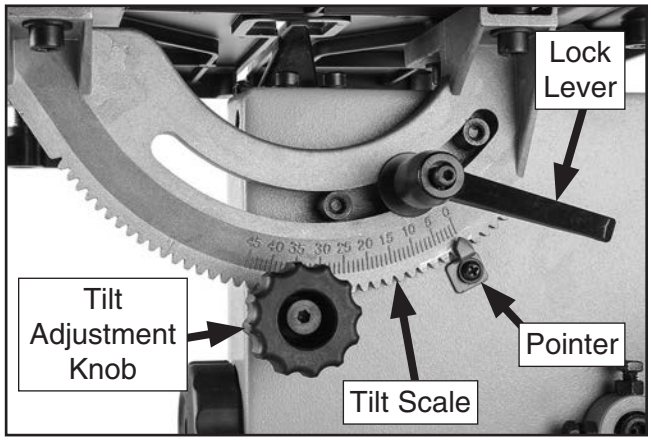

Figure 34. Table tilt controls.

To tilt the table:

1. DISCONNECT MACHINE FROM POWER!
2. Loosen table lock lever shown in **Figure 34**.
3. Rotate tilt adjustment knob until table reaches desired angle, then re-tighten lock lever.

Choosing Blades

Blade Dimensions

Length Range..... $61\frac{13}{16}$–$62\frac{3}{16}$"
Width Range..... $\frac{1}{8}$"–$\frac{3}{8}$"

Selecting the right blade requires a knowledge of the various blade characteristics to match the blade with the particular cutting operation.

Blade Length

Measured by the circumference, blade lengths are usually unique to the brand of your bandsaw and the distance between wheels. Blades will vary slightly even in the same length because of how they are welded. Refer to the **Accessories** section later in this manual for blade replacements from Grizzly.

Blade Width

Measured from the back of the blade to the tip of the blade tooth (the widest point), blade width is often the first consideration given to blade selection. Blade width dictates the largest and smallest curve that can be cut, as well as how accurately it can cut a straight line.

Always pick the size of blade that best suits your application.

- **Curve Cutting:** Use the chart in **Figure 35** to determine the correct blade for curve cutting. Determine the smallest radius curve that will be cut on your workpiece and use the corresponding blade width.

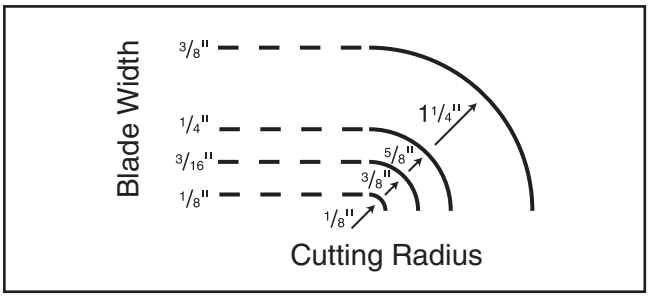

Figure 35. Recommended cutting radius per blade width.

- **Straight Cutting:** Use the largest width blade that you own. Large blades excel at cutting straight lines and are less prone to wander.

Tooth Style

Figure 36 illustrates the three main blade tooth styles:

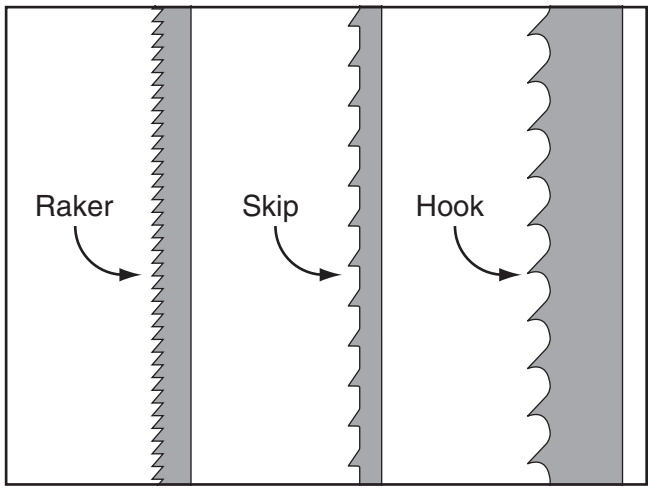

Figure 36. Main blade tooth styles.

- **Raker**: Considered to be the standard because the tooth size and shape are the same as the tooth gullet. The teeth on raker blades usually are very numerous, have no angle, and produce cuts by scraping the material. As a result, smooth cuts can be achieved without cutting fast or generating more heat than other tooth types.

- **Skip**: Similar to a raker blade that is missing every other tooth. Because of the design, skip toothed blades have a much larger gullet than raker blades, and therefore, cut faster and generate less heat. However, these blades also leave a rougher cut than raker blades.

- **Hook**: The teeth have a positive angle (downward) which makes them dig into the material, and the gullets are usually rounded for easier waste removal. These blades are excellent for the tough demands of resawing and ripping thick material.

Tooth Pitch

Measured as TPI (teeth per inch), tooth pitch determines the number of teeth. More teeth per inch (fine pitch) will cut slower, but smoother; while fewer teeth per inch (coarse pitch) will cut rougher, but faster. As a general rule, choose blades that will have at least three teeth in the material at all times. Use fine-pitched blades on harder woods and coarse-pitched blades on softer woods.

Blade Care

A bandsaw blade is a thin piece of steel that is subjected to tremendous stresses when cutting. You can obtain longer use from a bandsaw blade if you give it fair treatment and always use the appropriate feed rate for your operation. Be sure to select blades with the proper width, style, and pitch for each application. The wrong choice of blades will often produce unnecessary heat which will shorten the life of your blade.

A clean blade will perform much better than a dirty blade. Dirty or gummed up blades pass through the cutting material with much more resistance than clean blades. This extra resistance also causes unnecessary heat. Resin/pitch cleaners are excellent for cleaning dirty blades.

Blade Breakage

Many conditions may cause a bandsaw blade to break. Blade breakage is unavoidable, in some cases, since it is the natural result of the peculiar stresses that bandsaw blades are subjected to. Blade breakage is also due to avoidable circumstances. Avoidable breakage is most often the result of poor care or judgement on the part of the operator when mounting or adjusting the blade or blade guides.

The most common causes of blade breakage are:

- Faulty alignment/adjustment of the guides.
- Forcing/twisting a wide blade around a short radius.
- Feeding the workpiece too fast.
- Dull teeth or damaged tooth set.
- Over-tensioned blade.
- Upper blade guide assembly set too high above the workpiece.
- Using a blade with a lumpy or improperly finished braze or weld.
- Continuously running the bandsaw when not in use.
- Leaving blade tensioned when not in use.
- Using the wrong TPI for the workpiece thickness. (The general rule of thumb is three teeth in the workpiece at all times.)

Changing Blade

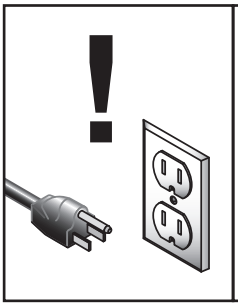

WARNING

Disconnect bandsaw from power BEFORE changing blade. Serious personal injury could occur if machine is started during this procedure.

CAUTION

LACERATION HAZARD! Bandsaw blades are sharp and difficult to handle. Wear heavy leather gloves while handling to reduce the risk of being cut.

To change the blade:

1. DISCONNECT MACHINE FROM POWER!

2. Move blade tension quick-release lever to left to release blade tension.

3. Adjust upper blade guide assembly all the way up, and move blade guides completely away from blade.

4. Remove miter gauge, fence, and fence rail from table (see **Page 16** for details).

5. Open upper and lower wheel covers.

6. Put on heavy leather gloves.

7. Slip blade off of wheels, slide it through table slot (see **Figure 37**), and remove it from machine.

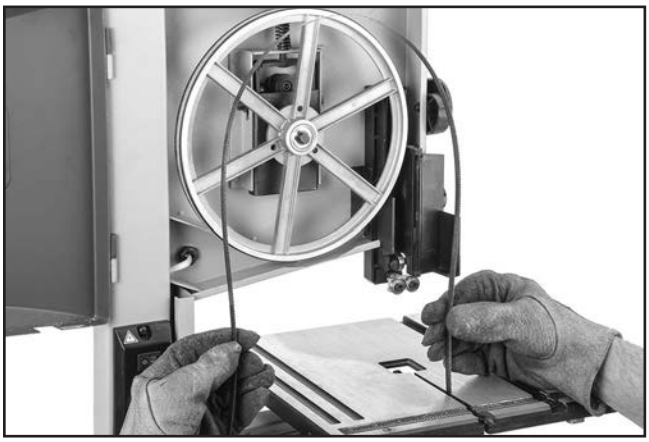

Figure 37. Removing blade.

8. Position new blade so teeth are facing you and pointing down in your right hand, then slide it through table slot.

   Note: *If the teeth will not point downward in any orientation, the blade is inside out. Remove the blade and twist it right-side out.*

9. Slip blade over wheels while making sure it is properly positioned between blade guards and guides.

10. Engage blade tension quick-release lever, then tension blade (see **Tensioning Blade** on **Page 20** for details).

11. Adjust blade tracking (see **Blade Tracking** on **Page 17**).

12. Adjust upper/lower support bearings and blade guides (see **Adjusting Blade Support Bearings** on **Page 22**).

13. Close wheel covers then re-install fence rail and fence (see **Pages 16–16**).

14. Make sure fence is parallel to miter slot and, if necessary, adjust alignment (see **Page 25**).

Ripping

"Ripping" means cutting with the grain of the wood stock. For plywood and other processed wood, ripping simply means cutting down the length of the workpiece. Beveled rip cuts may be performed by tilting the table.

To make a rip cut:

1. Adjust fence to match width of cut on your workpiece, then lock fence in place.

2. Adjust blade guide assembly to proper height above workpiece.

3. After all safety precautions have been met, turn bandsaw ***ON*** and wait for it to come to full speed. Slowly feed workpiece into blade until blade is completely through workpiece. **Figure 38** shows an example of a ripping operation.

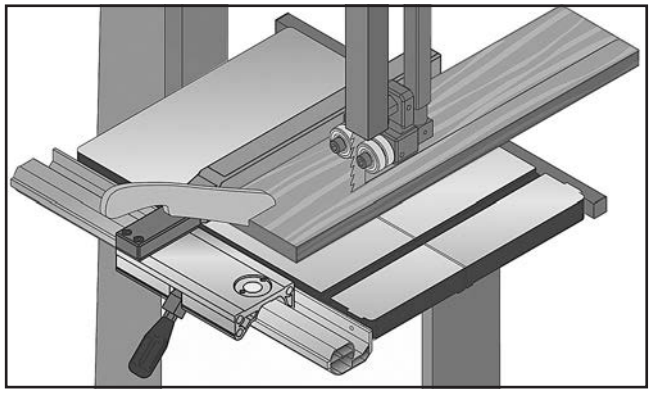

Figure 38. Example of a ripping operation.

⚠WARNING

ALWAYS use a push stick when ripping narrow pieces. Failure to follow these warnings may result in amputation or laceration injuries!

⚠WARNING

NEVER place fingers or hands in the line of cut. If you slip, your hands or fingers may go into the blade and may be cut.

Crosscutting

Crosscutting is the process of cutting across the grain of wood. For plywood and other processed wood, crosscutting simply means cutting across the width of the material. Crosscuts can be 90° or angled using the miter gauge. Compound crosscuts are those where the miter is angled and the table tilted.

To make a crosscut:

1. Mark workpiece on edge where you want to begin cut.

2. Adjust the blade guide assembly to the correct height.

3. Adjust the miter gauge to the correct angle needed for cut.

4. Move fence out of the way. Place workpiece evenly against miter gauge, then line up mark with blade.

5. After all safety precautions have been met, turn bandsaw ***ON*** and wait for it to come to full speed. Slowly feed workpiece into the blade until blade is all the way through workpiece. **Figure 39** shows an example of a crosscutting operation.

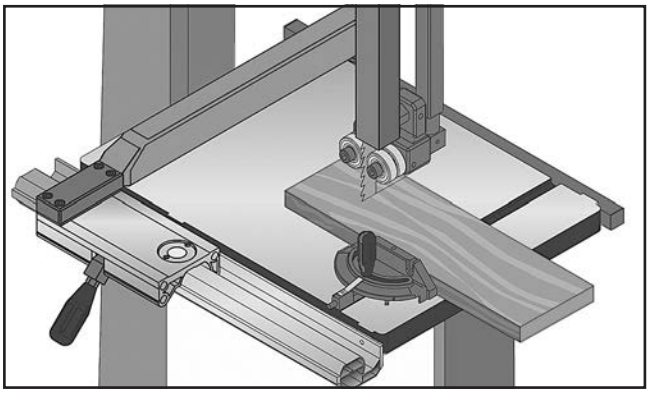

Figure 39. Example of a crosscutting operation with the miter gauge.

Resawing

"Resawing" means cutting the thickness of a board into two or more thinner boards (see **Figure 40** for an example). The maximum height of a board that can be resawn is limited by the maximum cutting height of the bandsaw.

One of the most important considerations for resawing is blade selection—a wide blade cuts straighter and is less prone to blade lead (see the **Blade Lead** subsection later in this manual for more information).

For most applications, use a blade with a hook or a skip tooth style. Choose blades with fewer teeth-per-inch (from 3 to 6 TPI), because they offer larger gullet capacities for clearing sawdust, which reduces heat buildup and strain on the motor.

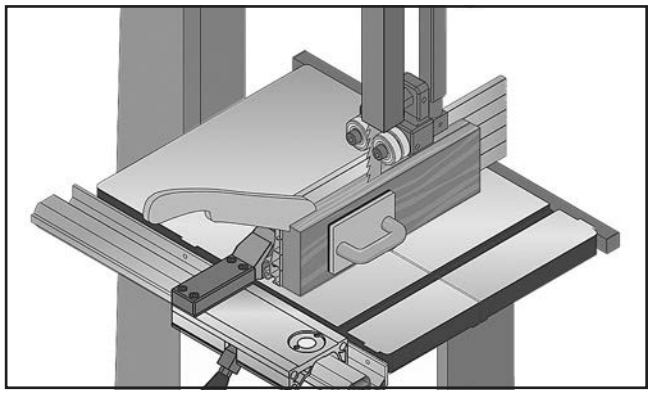

Figure 40. Example of a resawing operation.

⚠WARNING

When resawing thin pieces, a wandering blade (blade lead) can tear through the side of the workpiece, exposing your hands to the blade teeth. Always use push blocks when resawing and keep your hands clear of the blade.

Cutting Curves

When cutting curves, simultaneously feed and turn the stock carefully so the blade follows the layout line without twisting. If curves are sharp or tight, use a narrower blade with more TPI (teeth per inch) and make relief cuts to avoid having to back the workpiece away from the blade.

Always make short cuts first, then proceed to the longer cuts. Relief cuts reduce the chance of the blade being pinched or twisted. Relief cuts are cuts made through the waste portion of the workpiece and are stopped at the layout line, so when you're cutting along the layout line, waste wood is released from the workpiece, alleviating any pressure on the back of the blade. Relief cuts also make it easier to back the workpiece out once the saw blade has come to a stop, if needed.

NOTICE

The list below displays blade widths and the corresponding minimum radii for those blade widths.

Width	Min. Radius
1/8"	1/8"
3/16"	3/8"
1/4"	5/8"
3/8"	1 1/4"
1/2"	2 1/2"
5/8"	3 3/4"
3/4"	5 1/2"

Stacked Cuts

One of the benefits of a bandsaw is its ability to cut multiple copies of a particular shape by stacking a number of workpieces together. However, before making stacked cuts, ensure that the table is perpendicular (90°) to the blade—otherwise, any error in this setting will be compounded in the workpieces.

To complete a stacked cut:

1. Align workpieces from top to bottom.

2. Secure all pieces together in a manner that will not interfere with cutting. Hot glue on the edges works well, as do brad nails through the waste portion. (Be careful not to cut into the brads or you may break the blade!)

3. Lay out the shape you intend to cut on face of top piece.

4. Make relief cuts perpendicular to outline of your intended shape in areas where changes in blade direction could strain woodgrain or cause blade to bind.

5. Cut stack of pieces as though you were cutting a single piece. Follow your layout line with blade kerf on the waste side of your line (see **Figure 41** for an example of a stacked cut setup).

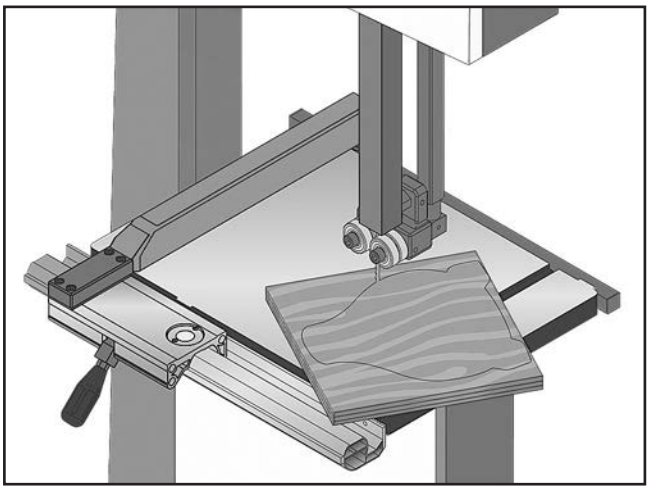

Figure 41. Example of a stacked cut setup.

SECTION 5: ACCESSORIES

⚠WARNING

Installing unapproved accessories may cause machine to malfunction, resulting in serious personal injury or machine damage. To reduce this risk, only install accessories recommended for this machine by Grizzly.

NOTICE

Refer to our website or latest catalog for additional recommended accessories.

Grizzly 62" Bandsaw Blades

MODEL	LENGTH	WIDTH	TPI	GAUGE
G9170	62"	¼"	6 Hook	0.014
G9171	62"	¼"	14 Raker	0.014
G9172	62"	¼"	24 Raker	0.014
G9173	62"	⅜"	6 Hook	0.014
G9174	62"	⅜"	14 Raker	0.014

T26403—The Missing Shop Manual: Bandsaw
Dedicated to providing integral information about woodworking tools and techniques that other manuals overlook, the books in this series contain safety facts, explanations about basic project set up, and tips for maximizing tool performance. In Bandsaw, you will learn how to best utilize this essential workshop tool. Filled with clear diagrams and instructions, this pocket sized durable manual is ideal for quick reference in the workshop. 112 pages, soft cover.

Figure 42. The Missing Shop Manual: Bandsaw.

Timberwolf® 62" Bandsaw Blades

Timber Wolf® Band Mill Blades are high performance bands. The exclusive use of low tensioned, high ductile Swedish silicon steel, unique geometric gullet designs and sets, unique manufacturing processes and quality control has resulted in the production of the finest bandsaw blades in the world. High Performance (HP) and Raker (RK) blades are specifically designed for detail work in 1" and smaller kiln dried wood when a very clean finish is required. They are also effective in plywood and other woods where tear-out is a concern as well as the cutting of soft metals. Positive Claw (PC) blades are everything a wood cutting blade was meant to be. They have over 60% of the speed capabilities of a hook style blade with "hook" style gullet geometry and fast chip removal, while giving you the great finish of a skip. Alternate set (AS-S) blades are specifically designed for straight-line resawing in very expensive, thick woods. These blades utilize the thinnest kerf possible and provide a super finish when speed is not a concern. You cannot go wrong with these blades.

MODEL	LENGTH	WIDTH	TPI	GAUGE
H8501	62"	¼"	4 Pos Claw	0.025
H8502	62"	¼"	6 Pos Claw	0.025
H8503	62"	¼"	10 Raker	0.025
H8504	62"	⅜"	4 Pos Claw	0.025
H8505	62"	⅜"	6 Pos Claw	0.025
H8506	62"	⅜"	10 Raker	0.025

G0710—1HP Wall-Mount Dust Collector
G1163P—1HP Floor Model Dust Collector
G3591—30 Micron Replacement Bag
H4340—3.0 Micron Upgrade Bag
Excellent point-of-use dust collectors that can be used next to the machine with only a small amount of ducting. Specifications: 450 CFM, 7.2" static pressure, 2 cubic foot bag, and 30 micron filter. Motor is 1HP, 110V/220V, 14A/7A.

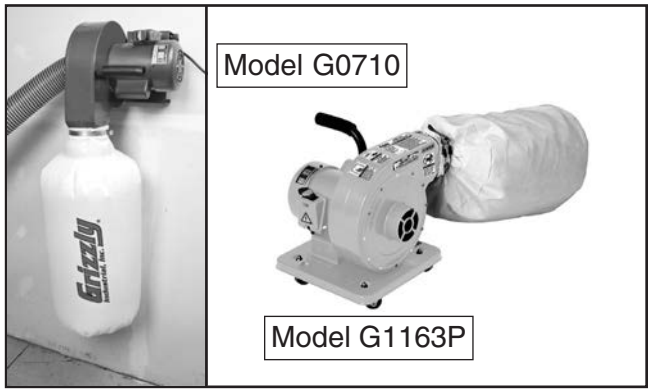

Figure 43. Point-of-use dust collectors.

W1315—Wire Hose Clamp 2"
W1317—Wire Hose Clamp 4"
D4226—Dust Collection Reducer 2" x 4" OD
D4206—4" x 10' Clear Hose
D4202—2' x 10' Clear Hose
W1007—Plastic Blast Gate 4"
W1053—Anti-Static Grounding Kit
We've hand picked a selection of dust collection components commonly needed to connect your new machine to basic dust collection.

Figure 44. Dust collection accessories.

Basic Eye Protection

T20501—Face Shield Crown Protector 4"
T20502—Face Shield Crown Protector 7"
T20503—Face Shield Window
T20451—"Kirova" Clear Safety Glasses
T20452—"Kirova" Anti-Reflective S. Glasses
H7194—Bifocal Safety Glasses 1.5
H7195—Bifocal Safety Glasses 2.0
H7196—Bifocal Safety Glasses 2.5

Figure 45. Assortment of basic eye protection.

D3197—24" Aluminum Ruler with Handle
D2828—12" Stainless Steel Ruler
T25676—6" Stainless Steel Rule
G9639—90° Wide Base Square 2¾" x 4"
These high-quality, precision measuring tools are perfect for squaring and aligning your bandsaw table, calibrating the tilt scale, and wheel alignment adjustments.

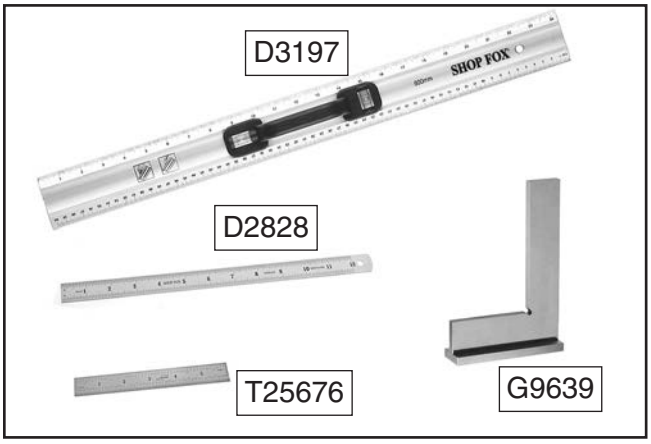

Figure 46. Measuring tools.

D2054—Roller Stand
T26979—3-in-1 Workpiece Support Stand
Support long workpieces with a roller-type stand (D2054), featuring a 13" wide ball bearing roller—perfect for making straight cuts. If you need a hand making long, curved cuts, try a workpiece support stand (T26979) which features 8 rolling balls, allowing for lateral movement while feeding your workpiece.

Figure 47. Roller and workpiece support stands.

D2056—Tool Table
Get that bench-top tool off your bench and put it on this sturdy stand instead! Flared legs and adjustable rubber feet ensure stability and reduce machine vibration. Butcher block finish table top measures 1" x 13" x 23" and is 30-1/2" from the floor. Bottom measures 21" x 32". 700 lb. Capacity!

Figure 48. D2056 Tool Table.

T26480—Angle Master
Know all the angles, do better work. Whether you like geometry or not, it's a regular part of a woodworker's job. Now here's a tool that makes it easier. The Angle Master will turn complex miters and bevels into simple cuts. This flexible angle duplicating tool allows you to easily transfer angles to your band saw, miter saw or table saw. Now you can duplicate any angle and make perfect cuts every time.

Figure 49. T26480 Angle Master.

SECTION 6: MAINTENANCE

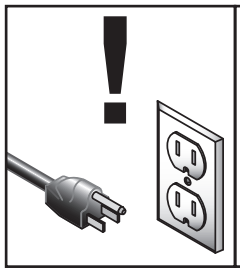

⚠WARNING

To reduce risk of shock or accidental startup, always disconnect machine from power before adjustments, maintenance, or service.

Schedule

For optimum performance from your machine, follow this maintenance schedule:

Daily

- Check/correct loose mounting bolts.
- Check/correct damaged saw blade.
- Check/correct worn or damaged wires.
- Correct any other unsafe condition.

Monthly

- Check for V-belt tension, damage, or wear.
- Remove blade and thoroughly clean all built-up sawdust from the rubber tires on the wheels.
- Clean/vacuum dust buildup from inside cabinet and off motor.

Cleaning & Lubricating

Vacuum excess wood chips and sawdust, and wipe off the remaining dust with a dry cloth. If resin has built up, use a resin dissolving cleaner to remove it.

Once a month, remove the blade and thoroughly clean all built-up sawdust from the rubber tires on the wheels.

If the table becomes difficult to tilt, lubricate the trunnion gear and the slide in the trunnion base.

Redressing Rubber Tires

As the bandsaw ages, the rubber tires on the wheels may need to be redressed if they harden or glaze over. Redressing the rubber tires improves blade tracking and reduces vibration/blade lead.

If the rubber tires become too worn, then blade tracking will become extremely difficult because wheel crown will lose their proper shape. At that point, redressing will no longer be effective and the rubber tires must be replaced.

To redress the rubber tires:

1. DISCONNECT MACHINE FROM POWER!
2. Put on heavy leather gloves.
3. Remove blade.
4. Clean any built-up sawdust from rubber tires.
5. Hold 100-grit sandpaper against the rubber tire and rotate the wheel by hand. Only redress the rubber enough to expose a fresh rubber surface.

SECTION 7: SERVICE

Review the troubleshooting and procedures in this section if a problem develops with your machine. If you need replacement parts or additional help with a procedure, call our Technical Support. **Note:** *Please gather the serial number and manufacture date of your machine before calling.*

Troubleshooting

Symptom	Possible Cause	Possible Solution
Machine does not start or a breaker trips.	1. Switch disabling key removed. 2. Incorrect power supply voltage or circuit size. 3. Power supply circuit breaker tripped or fuse blown. 4. Wiring open/has high resistance. 5. ON/OFF switch at fault. 6. Motor at fault.	1. Install switch disabling key. 2. Ensure correct power supply voltage and circuit size. 3. Ensure circuit is sized correctly and free of shorts. Reset circuit breaker or replace fuse. 4. Check/fix broken, disconnected, or corroded wires. 5. Replace switch. 6. Test/repair/replace.
Machine stalls or is underpowered.	1. Workpiece material not suitable for machine. 2. Feed rate/cutting speed too fast. 3. Dull blades. 4. Incorrect blade for task. 5. Workpiece crooked; fence loose or misadjusted. 6. Blade slipping on wheels. 7. Belt slipping. 8. Motor overheated. 9. Run capacitor at fault. 10. Pulley/sprocket slipping on shaft.	1. Only cut wood/ensure moisture is below 20%. 2. Decrease feed rate/cutting speed. 3 Sharpen/replace blades (**Page 31**). 4. Use correct blade. 5. Straighten or replace workpiece/adjust fence. 6. Increase blade tension (**Page 20**). Clean tires/blade. 7. Clean oil/grease from belt. Tension/replace belt (**Pages 42–43**); ensure pulleys are aligned. 8. Clean motor, let cool, and reduce workload. 9. Test/repair/replace. 10. Replace loose pulley/shaft.
Machine has vibration or noisy operation.	1. Blade weld at fault/teeth broken. 2. Belt worn or loose. 3. Motor fan rubbing on fan cover. 4. Motor mount loose/broken. 5. Pulley loose. 6. Motor or machine component loose. 7. Machine mounted incorrectly. 8. Motor bearings at fault.	1. Replace blade (**Page 31**). 2. Inspect/replace belt (**Page 43**). 3. Fix/replace fan cover; replace loose/damaged fan. 4. Tighten/replace. 5. Re-align/replace shaft, pulley set screw, and key. 6. Inspect/replace damaged bolts/nuts, and retighten with thread locking fluid. 7. Tighten mounting bolts; relocate/shim machine. 8. Test by rotating shaft; rotational grinding/loose shaft requires bearing replacement.

Symptom	Possible Cause	Possible Solution
Blade or teeth break/crack.	1. Blade tension incorrect. 2. Blade incorrect for application. 3. Excessive feed rate/pressure. 4. Cutting corners too sharply. 5. Blade dull. 6. Blade tracking wrong. 7. Blade guides adjusted too far forward. 8. Blade guide height in wrong position. 9. Blade weld at fault. 10. Wheel tires worn or incorrectly installed. 11. Fence or miter slot out of alignment with blade. 12. Bad bearings on wheels or guide bearings.	1. Adjust blade tension (**Page 20**). 2. Use correct blade for application. 3. Reduce feed rate/pressure. 4. Use a wider arc on outside cuts, or use relief cuts to make tight inside cuts. 5. Replace blade (**Page 31**). 6. Adjust blade tracking (**Page 17**). 7. Adjust blade guides for correct blade support (**Pages 22–23**). 8. Adjust upper blade guide so blade is as close to workpiece as possible (**Pages 22–23**). 9. Replace blade (**Page 31**). 10. Replace or re-install tire. 11. Align table and fence with blade (**Page 24**). 12. Replace wheels and/or guide bearings.
Blade slows, smokes, shows overheating or wears on one side.	1. Too much side pressure when feeding workpiece. 2. Blade contacting table insert. 3. Blade guides worn or misadjusted. 4. Blade has insufficient support. 5. Blade installed backwards or inside out. 6. Wheels out of alignment. 7. Dull or incorrect blade. 8. Blade is bell-mouthed. 9. Fence not parallel with blade.	1. Feed workpiece straight into blade. 2. Adjust blade guide bearings to eliminate excess side pressure (**Pages 22–23**). 3. Adjust blade guide bracket. 4. Adjust blade guides as close to workpiece as possible (**Pages 22–23**). 5. Check blade installation; make sure teeth face front of machine and point down in table throat. Re-install blade if necessary (**Page 31**). 6. Adjust wheels so they are coplanar (**Page 44**). 7. Replace blade (**Page 31**). 8. Replace blade (**Page 31**). 9. Adjust fence parallelism with blade (**Page 24**).
Finished workpieces are rough or show scoring.	1. Blade overloaded and twists while cutting. 2. Blade TPI too coarse. 3. Blade loose and fluttering. 4. Blade tracking incorrect. 5. Blade has missing or bent teeth. 6. Blade has a faulty weld.	1. Decrease feed rate. 2. Use correct blade for material and type of cut. 3. Increase blade tension as required (**Page 20**). 4. Adjust blade tracking (**Page 17**). 5. Replace blade (**Page 31**). 6. Replace blade (**Page 31**).
Table is hard to tilt.	1. Table tilt lock lever tightened. 2. Sawdust or pitch trapped between trunnion and base. 3. Metal burrs on trunnion.	1. Loosen table tilt lock lever. 2. Remove sawdust or pitch. 3. Remove burrs.
Miter bar binds in miter slot.	1. Miter slot dirty or gummed up. 2. Miter bar bent.	1. Carefully clean miter slot. 2. Replace.
Blade tracks incorrectly, or comes off wheels.	1. Tracking is not adjusted properly. 2. Wheels are not coplanar. 3. Blade tension too loose. 4. Blade guides too tight against blade. 5. Feeding workpiece too fast. 6. Incorrect blade for bandsaw. 7. Blade is bell-mouthed, worn, or dull. 8. Wheel tire damaged or worn.	1. Adjust tracking (**Page 17**). 2. Adjust wheel coplanarity (**Page 44**). 3. Increase blade tension (**Page 20**). 4. Adjust blade guides (**Pages 22–23**). 5. Feed workpiece slower. 6. Install correct blade. 7. Install new blade (**Page 31**) and remove tension from blade when not in use. 8. Redress or replace wheel tires (**Page 38**).

Symptom	Possible Cause	Possible Solution
Cut is crooked or blade wanders (blade lead).	1. Feeding pressure too high or cutting too fast. 2. Blade tension too loose. 3. Blade dull or damaged. 4. Inadequate blade support. 5. Blade too narrow for cut type. 6. Blade tracking incorrect. 7. Table loose. 8. Fence or miter slot out of alignment with blade. 9. Blade guides or support bearing incorrectly adjusted. 10. Tooth set uneven or teeth sharper on one side than the other. 11. Wrong blade TPI. 12. Blade is following grain of wood.	1. Adjust feed rate and cutting speed as required. 2. Increase blade tension (**Page 20**). 3. Replace blade (**Page 31**). 4. Adjust upper blade guide as close to workpiece as possible (**Pages 22–23**). 5. Use wider blade. 6. Adjust blade tracking (**Page 17**). 7. Tighten table trunnion mounting bolts or tilt lock lever. 8. Align table and fence with blade (**Page 24**). 9. Adjust blade guide bearings and support bearing for correct blade support (**Pages 22–23**). 10. Replace blade (**Page 31**). 11. Use a blade with fewer TPI. 12. Increase blade tension (**Page 29**).
Blade dulls prematurely.	1. Wrong blade TPI. 2. Improper feed pressure. 3. Blade is twisted. 4. Blade is slipping on wheel. 5. Guides hitting teeth.	1. Use blade with correct TPI. 2. Use correct feed pressure. 3. Replace blade (**Page 31**). 4. Increase blade tension (**Page 29**). Clean wheel tire. 5. Adjust blade guide bearings and support bearing (**Pages 22–23**).
Backside of blade deformation/ cracking.	1. Feed pressure too high. 2. Blade tension too high. 3. Incorrect blade guide alignment. 4. Guides are worn. 5. Blade tracking too far back and hitting lip of wheels.	1. Reduce feed pressure. 2. Adjust blade tension (**Page 29**). 3. Correct blade guide alignment (**Pages 22–23**). 4. Replace guides. 5. Adjust tracking (**Page 17**).
Sawdust buildup inside cabinet.	1. Clogged dust port.	1. Clean dust port.

Checking/Adjusting Belt Tension

To ensure optimum power transmission from the motor to the blade, the belt must be in good condition and operate under proper tension.

Belt tension should be checked at least every month—more often if the bandsaw is used daily. If the belt shows signs of cracks, fraying, and excessive wear, replace it as instructed in **Replacing Belt** on **Page 43**.

Checking Belt Tension

1. DISCONNECT MACHINE FROM POWER!

2. Open lower wheel cover.

3. Check belt condition and deflection. The belt is properly tensioned if there is approximately ¼" deflection. Deflection is checked by pushing belt with moderate pressure, as shown in **Figure 50**, and noting how much it moves.

   —If the belt is not properly tensioned, perform the **Tensioning Belt** procedure.

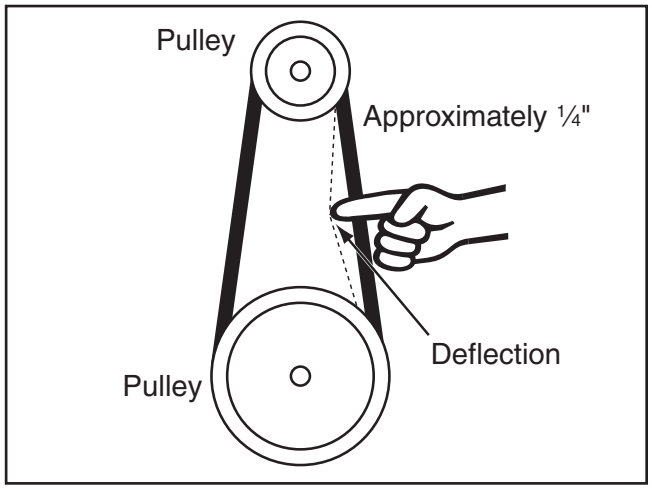

Figure 50. Checking belt tension.

Tensioning Belt

Tool Needed **Qty**
Hex Wrench 6mm..... 1

To properly tension the belt:

1. DISCONNECT MACHINE FROM POWER!

2. Loosen motor mount cap screws shown in **Figure 51**.

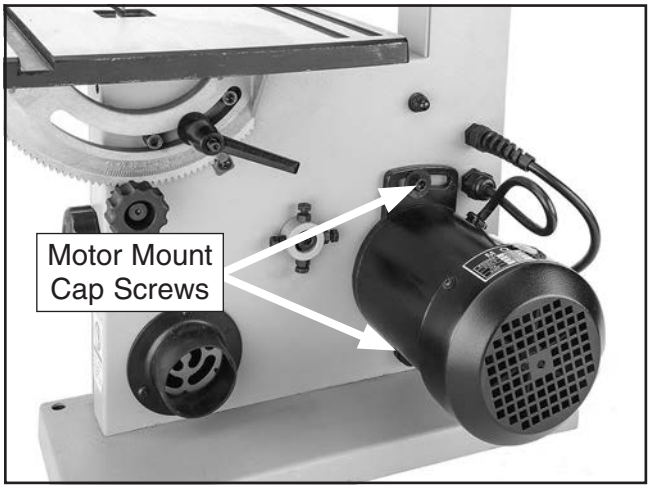

Figure 51. Location of motor mount cap screws used for adjusting belt tension.

3. Push motor to the right (as viewed from back of machine) until you feel moderate tension, then re-tighten both cap screws.

4. Check belt tension. If necessary, repeat **Steps 2–3** until there is approximately ¼" deflection in the belt.

5. Close wheel cover.

Replacing Belt

To ensure optimum power transmission from the motor to the blade, the belt must be in good condition and be properly tensioned.

Replace the belt if it shows signs of cracking, fraying, and excessive wear.

Tools Needed	**Qty**
Hex Wrench 6mm	1
Retaining Ring Pliers	1
Replacement Belt (Part No. P0803048)	1

To replace the belt:

1. DISCONNECT MACHINE FROM POWER!

2. Put on heavy leather gloves and remove blade from machine (refer to **Changing Blade** on **Page 31**).

3. Loosen motor mount cap screws (see **Figure 51** on **Page 42**).

4. Pivot motor to the left (as viewed from back of bandsaw) to release belt tension.

5. Open lower wheel cover and remove belt from motor pulley.

6. Remove external retaining ring from lower wheel shaft (see **Figure 52**) and remove lower wheel.

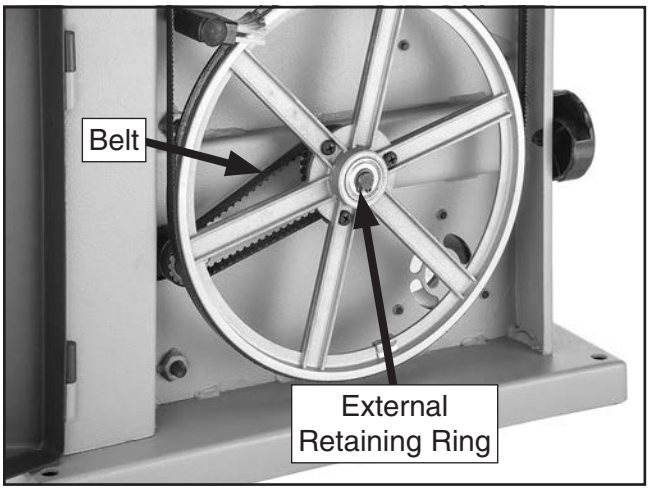

Figure 52. Belt change components inside lower wheel cover.

7. Install new belt on both pulleys, and then reinstall wheel and retaining ring.

8. Properly tension belt, as instructed in **Belt Tension** on **Page 42**.

9. Replace blade, properly track and tension it (see **Pages 17** and **20**), and then adjust guide and support bearings.

Wheel Alignment

Wheel alignment is important for optimal performance from your bandsaw. Wheels are properly aligned when they are parallel with each other and in the same plane or "coplanar" (see the illustration in the figure to the right).

When wheels are coplanar, the bandsaw is more likely to cut straight without wandering; and vibration, heat, and blade wear are considerably decreased because the blade is automatically balanced on the wheel.

Bringing the wheel into alignment may require a combination of shimming a wheel and adjusting the position of the lower wheel shaft.

Tools Needed	**Qty**
Straightedge 2'	1
Fine Ruler	1
Wrench Open-End 10mm	1

Checking Wheel Alignment

1. DISCONNECT MACHINE FROM POWER!

2. Remove table.

3. With blade on and properly tensioned, hold a straightedge close to center of both wheels. Make sure straightedge fully extends across the rims of both wheels, as shown in **Figure 53**.

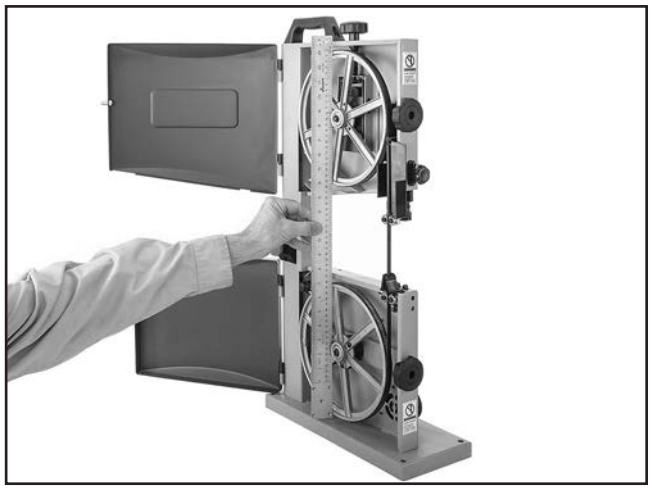

Figure 53. Checking if the wheels are coplanar.

4. Check wheel alignment, and adjust tracking knob to bring both wheels into alignment as much as possible. If wheels cannot be adjusted coplanar, use **Figure 54** to determine how to proceed with alignment adjustments.

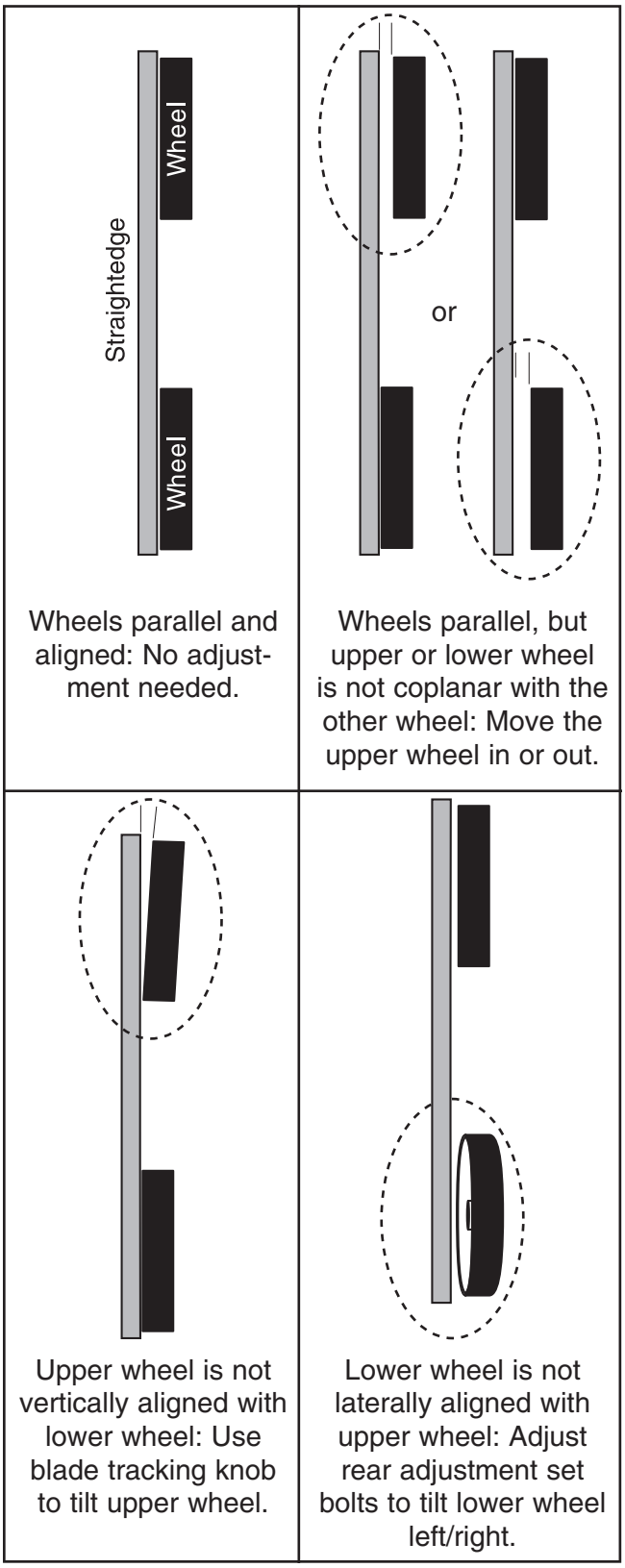

Figure 54. Wheel alignment illustration.

Shimming a Wheel

A wheel that is parallel with the other wheel, but is not coplanar, must be shimmed by the distance that it is not in the same plane with the other wheel.

Tip: *Standard washers work well for shimming the wheel because they can easily be stacked to get the desired height.*

To shim a wheel:

1. DISCONNECT MACHINE FROM POWER!

2. Adjust upper wheel tracking so that it is parallel with lower wheel.

3. With straightedge touching both rims of wheel that does not need to be adjusted, measure the distance away from the other wheel with a fine ruler, as shown in **Figure 55**. The distance measured with the ruler is the distance this wheel must be shimmed.

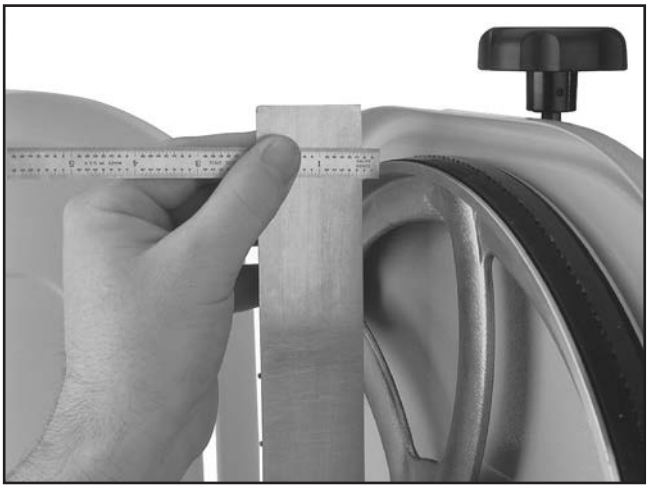

Figure 55. Example of measuring the distance to shim the wheel to be coplanar.

4. Remove blade.

5. Remove wheel to be shimmed. Place as many shims as necessary to correct gap measured in **Step 3** onto wheel shaft.

6. Re-install wheel and secure it in place.

7. Re-install blade and properly tension it.

8. Perform previous **Checking Wheel Alignment** procedure. If necessary to make the wheels parallel, repeat this procedure.

9. The first time you get the wheels coplanar, place a mark on each wheel where you held the straightedge, then use this position again in the future if you need to repeat the procedure. This assures repeated accuracy every time you adjust the wheels.

10. Close wheel covers.

Adjusting Lower Wheel Shaft Position

If the lower wheel is tilted laterally (side to side), perform the following procedure to make it coplanar with the upper wheel.

There are four adjustment bolts with hex nuts in the lower wheel bracket, shown in **Figure 56**, that adjust the wheel tilt from side-to-side and up-and-down.

Note: *If you make a mistake during the following procedure, it can be very difficult to correct. Therefore, it is important to double check wheel alignment (see **Page 44**), and troubleshoot all other possible solutions (see **Troubleshooting** on **Page 39**) prior to adjusting the lower wheel shaft position.*

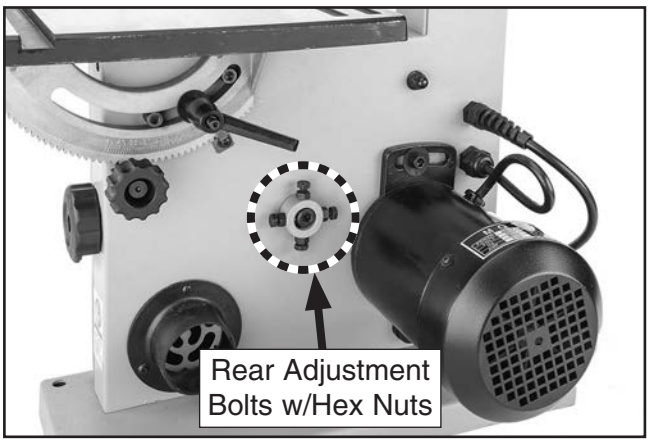

Figure 56. Location of rear lateral adjustment components.

Tools Needed **Qty**
Wrench or Socket 10mm 1

To adjust lower wheel laterally:

1. DISCONNECT MACHINE FROM POWER!

2. Remove fence and table from machine.

3. Use a straightedge to check wheels at A and B locations (see **Figure 57**). The wheels should align

   —If the wheels do not align, they require lateral adjustment (see **Figure 58**); proceed to **Step 4**.

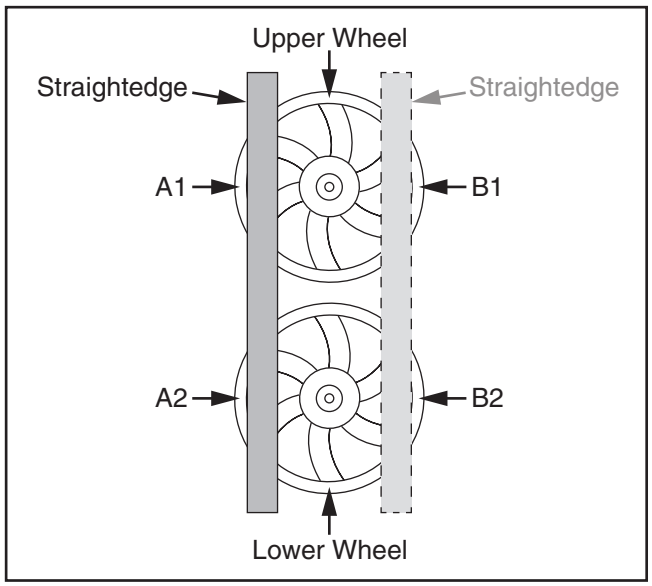

Figure 57. Example of using a straightedge to check lateral wheel alignment.

4. Mark upper and lower wheels with a pencil or marker to indicate measuring locations (see **Figure 57**).

   Note: *Marking the wheels ensures more accurate results in case there are irregularities in the wheels.*

5. Using 10mm wrench, loosen hex nuts on rear left and right adjustment bolts (see **Figure 56 on Page 45**.

6. Rotate left and right adjustment bolts until lower wheel is coplanar with upper wheel, see **Figure 58**.

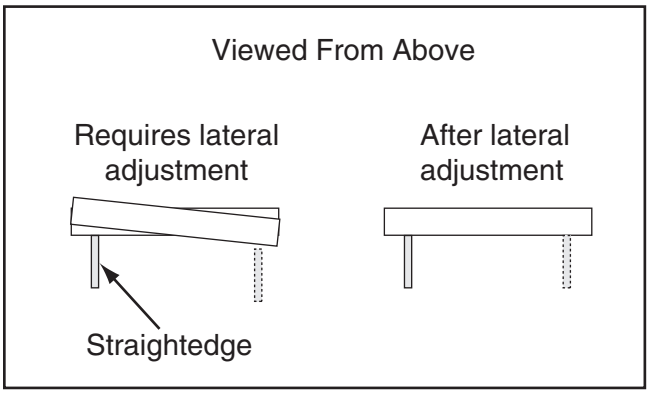

Figure 58. Before and after lateral wheel alignment (viewed from above).

7. Re-tighten hex nuts loosened in **Step 6**.

Blade Lead

Bandsaw blades may wander off the cut line when sawing, as shown in **Figure 59**. This is called blade lead.

Blade lead is usually caused by too fast of a feed rate, a dull or abused blade, or improper blade tension. If your blade is sharp/undamaged, properly tensioned, and you still have blade lead, perform the following procedures.

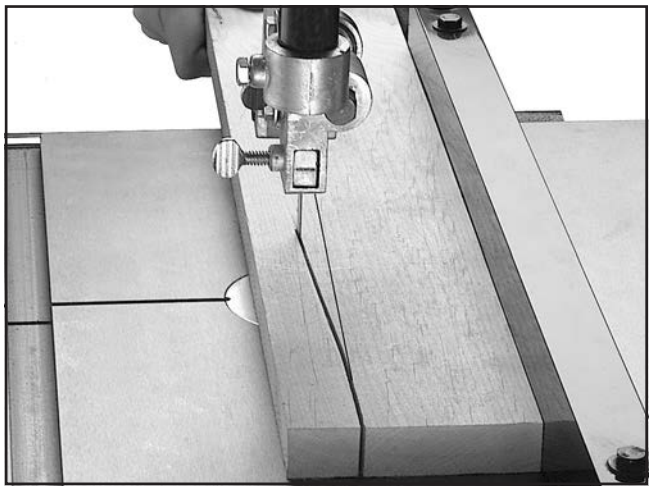

Figure 59. Example of blade lead.

To correct blade lead:

1. Make sure blade is properly tensioned and blade guides are adjusted correctly.

2. Use less pressure when feeding workpiece through cut.

3. Make sure miter slot and fence are parallel to blade line (see **Aligning Table** and **Aligning Fence** procedures for detailed information).

4. Perform test cut with bandsaw.

   —If there is still blade lead present, compensate for this condition by skewing the fence or shifting the table, as instructed in the following procedures.

To skew your fence:

1. Cut a piece of scrap wood approximately ¾" thick x 3" wide x 17" long. On wide face of board, draw a straight line parallel to long edge.

2. Slide bandsaw fence out of way and cut along the line halfway through the board. Turn bandsaw ***OFF*** and wait for blade to stop. Do not move board.

3. Clamp board to bandsaw table, then slide fence over to board so it barely touches one end of board.

4. Use a 4mm hex wrench to loosen the two fence adjustment cap screws, skew fence so that it is parallel with scrap piece, then re-tighten cap screws.

5. Make a few cuts using fence.

   —If blade lead is still present, repeat **Steps 1–4** until blade and fence are parallel with each other.

SECTION 8: WIRING

These pages are current at the time of printing. However, in the spirit of improvement, we may make changes to the electrical systems of future machines. Compare the manufacture date of your machine to the one stated in this manual, and study this section carefully.

If there are differences between your machine and what is shown in this section, call Technical Support at (570) 546-9663 for assistance BEFORE making any changes to the wiring on your machine. An updated wiring diagram may be available. **Note:** *Please gather the serial number and manufacture date of your machine before calling. This information can be found on the main machine label.*

⚠WARNING
Wiring Safety Instructions

SHOCK HAZARD. Working on wiring that is connected to a power source is extremely dangerous. Touching electrified parts will result in personal injury including but not limited to severe burns, electrocution, or death. Disconnect the power from the machine before servicing electrical components!

MODIFICATIONS. Modifying the wiring beyond what is shown in the diagram may lead to unpredictable results, including serious injury or fire. This includes the installation of unapproved aftermarket parts.

WIRE CONNECTIONS. All connections must be tight to prevent wires from loosening during machine operation. Double-check all wires disconnected or connected during any wiring task to ensure tight connections.

CIRCUIT REQUIREMENTS. You MUST follow the requirements at the beginning of this manual when connecting your machine to a power source.

WIRE/COMPONENT DAMAGE. Damaged wires or components increase the risk of serious personal injury, fire, or machine damage. If you notice that any wires or components are damaged while performing a wiring task, replace those wires or components.

MOTOR WIRING. The motor wiring shown in these diagrams is current at the time of printing but may not match your machine. If you find this to be the case, use the wiring diagram inside the motor junction box.

CAPACITORS/INVERTERS. Some capacitors and power inverters store an electrical charge for up to 10 minutes after being disconnected from the power source. To reduce the risk of being shocked, wait at least this long before working on capacitors.

EXPERIENCING DIFFICULTIES. If you are experiencing difficulties understanding the information included in this section, contact our Technical Support at (570) 546-9663.

NOTICE

The photos and diagrams included in this section are best viewed in color. You can view these pages in color at www.grizzly.com.

COLOR KEY

BLACK	Bk	BLUE	Bl	YELLOW	Yl	LIGHT BLUE	Lb
WHITE	Wt	BROWN	Br	YELLOW GREEN	Yg	BLUE WHITE	Bw
GREEN	Gn	GRAY	Gy	PURPLE	Pu	TUR-QUOISE	Tu
RED	Rd	ORANGE	Or	PINK	Pk		

Wiring Diagram

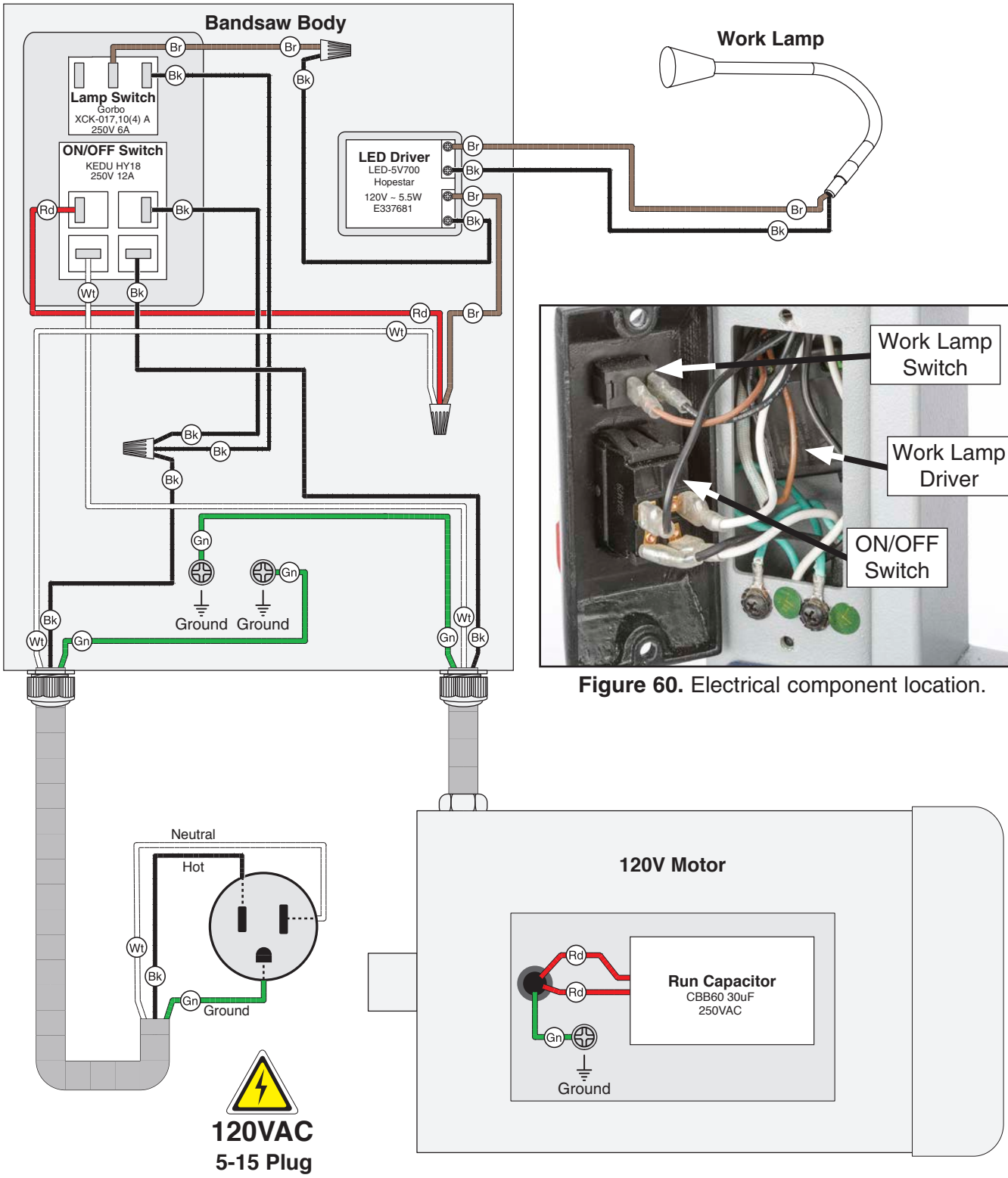

Figure 60. Electrical component location.

SECTION 9: PARTS

We do our best to stock replacement parts when possible, but we cannot guarantee that all parts shown are available for purchase. Call **(800) 523-4777** or visit **www.grizzly.com/parts** to check for availability.

Main

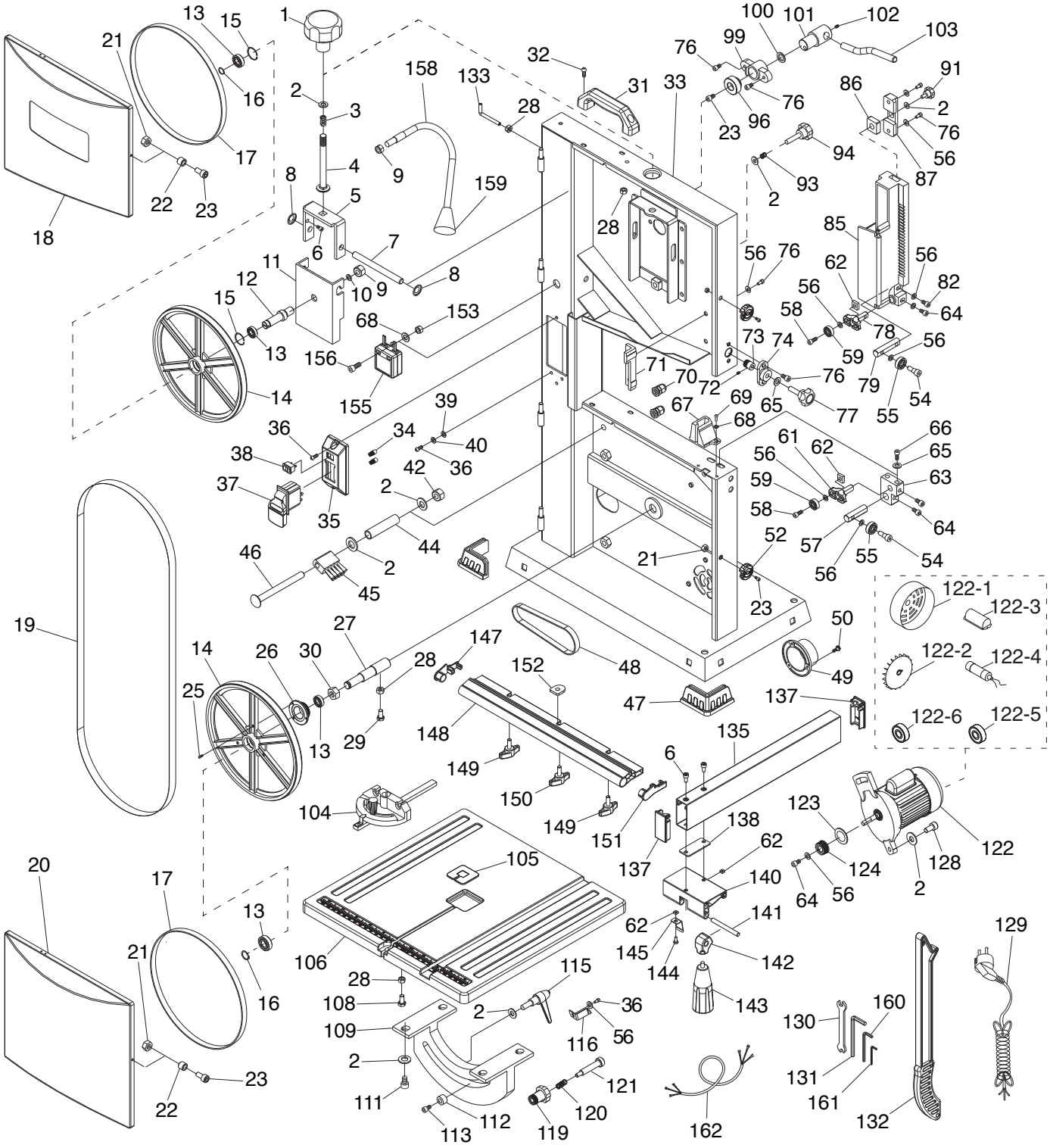

Main Parts List

REF	PART #	DESCRIPTION
1	P0803001	KNOB M8-1.25 X 25, DIA 50, 5-LOBE
2	P0803002	FLAT WASHER 8MM
3	P0803003	COMPRESSION SPRING 2.5 X 14 X 64
4	P0803004	CARRIAGE BOLT M8-1.25 X 80
5	P0803005	WHEEL ADJUSTMENT BRACKET
6	P0803006	CAP SCREW M5-.8 X 8
7	P0803007	QUICK-RELEASE PIVOT SHAFT 8 X 90
8	P0803008	EXT RETAINING RING 8MM SELF-LOCKING
9	P0803009	HEX NUT M10-1.5
10	P0803010	LOCK WASHER 10MM
11	P0803011	WHEEL MOUNT PLATE
12	P0803012	WHEEL SHAFT (UPPER)
13	P0803013	BALL BEARING 6000ZZ
14	P0803014	WHEEL 9"
15	P0803015	INT RETAINING RING 26MM
16	P0803016	EXT RETAINING RING 10MM
17	P0803017	TIRE 9"
18	P0803018	WHEEL COVER (UPPER)
19	P0803019	BLADE 62" X 3/8" X 0.025" 10 TPI RAKER
20	P0803020	WHEEL COVER (LOWER)
21	P0803021	LOCK NUT M6-1
22	P0803022	BUSHING
23	P0803023	CAP SCREW M6-1 X 16
25	P0803025	TAP SCREW M5 X 14
26	P0803026	WHEEL PULLEY
27	P0803027	WHEEL SHAFT (LOWER)
28	P0803028	HEX NUT M6-1
29	P0803029	HEX BOLT M6-1 X 16
30	P0803030	LOCK NUT M12-1.75
31	P0803031	LIFTING HANDLE
32	P0803032	PHLP HD SCR M6-1 X 10
33	P0803033	FRAME
34	P0803034	WIRE CONNECTOR
35	P0803035	SWITCH MOUNTING PLATE
36	P0803036	PHLP HD SCR M5-.8 X 10
37	P0803037	PADDLE SWITCH W/KEY GRIZZLY G8988
38	P0803038	ROCKER SWITCH GORBO XCK-017 10(4) A
39	P0803039	LOCK WASHER 5MM
40	P0803040	EXT TOOTH WASHER 5MM
42	P0803042	HEX NUT M8-1.25
44	P0803044	SPACER

REF	PART #	DESCRIPTION
45	P0803045	WHEEL BRUSH
46	P0803046	CARRIAGE BOLT M8-1.25 X 65
47	P0803047	RUBBER FOOT
48	P0803048	TIMING BELT 130L036
49	P0803049	DUST PORT 2"
50	P0803050	PHLP HD SCR M5-.8 X 8
52	P0803052	DOOR LOCK CAM KNOB
54	P0803054	BEARING RETAINER SCREW M5-.8 X 15
55	P0803055	BALL BEARING 606ZZ
56	P0803056	FENDER WASHER 5MM
57	P0803057	LOWER GUIDE ROD
58	P0803058	CAP SCREW M5-.8 X 14
59	P0803059	BALL BEARING 605ZZ
61	P0803061	LOWER GUIDE
62	P0803062	SQUARE NUT M5-.8
63	P0803063	LOWER GUIDE BLOCK
64	P0803064	CAP SCREW M5-.8 X 12
65	P0803065	FLAT WASHER 6MM
66	P0803066	CAP SCREW M6-1 X 10
67	P0803067	LOWER BLADE COVER
68	P0803068	FLAT WASHER 4MM
69	P0803069	PHLP HD SCR M4-.7 X 10
70	P0803070	STRAIN RELIEF M16-2 TYPE-3
71	P0803071	GUIDE PLATE
72	P0803072	SET SCREW M4-.7 X 6
73	P0803073	PINION
74	P0803074	ADJUSTMENT KNOB SEAT
76	P0803076	CAP SCREW M5-.8 X 10
77	P0803077	KNOB W/SHAFT 6 X 22, DIA 32, 6-LOBE
78	P0803078	UPPER GUIDE
79	P0803079	UPPER GUIDE ROD
82	P0803082	CAP SCREW M5-.8 X 16
85	P0803085	UPPER BLADE COVER ASSEMBLY
86	P0803086	SQUARE NUT M8-1.25
87	P0803087	UPPER GUIDE BLOCK
91	P0803091	KNOB BOLT M8-1.25 X 14, DIA 32, 6-LOBE
93	P0803093	COMPRESSION SPRING 1 X 13 X 18
94	P0803094	KNOB BOLT M8-1.25 X 35, DIA 32, 6-LOBE
96	P0803096	RELEASE WHEEL
99	P0803099	QUICK-RELEASE MOUNT BRACKET
100	P0803100	WAVY WASHER 19MM

Main Parts List (Continued)

REF	PART #	DESCRIPTION
101	P0803101	QUICK-RELEASE LEVER HUB
102	P0803102	SET SCREW M5-.8 X 6
103	P0803103	QUICK-RELEASE LEVER 8 X 95
104	P0803104	MITER GAUGE ASSEMBLY
105	P0803105	TABLE INSERT
106	P0803106	TABLE
108	P0803108	HEX BOLT M6-1 X 22
109	P0803109	BEVEL CASTING
111	P0803111	CAP SCREW M8-1.25 X 14
112	P0803112	GUIDE BUSHING
113	P0803113	CAP SCREW M6-1 X 12
115	P0803115	ADJUSTABLE HANDLE M8-1.25 X 25
116	P0803116	BEVEL INDICATOR
119	P0803119	GEARED KNOB 12T, 12L X 40D
120	P0803120	COMPRESSION SPRING 0.7 X 9.8 X 25
121	P0803121	SHOULDER SCREW M5-.8 X 10, 8 X 39
122	P0803122	MOTOR 1/3 HP 120V 1-PH
122-1	P0803122-1	MOTOR FAN COVER
122-2	P0803122-2	MOTOR FAN
122-3	P0803122-3	CAPACITOR COVER
122-4	P0803122-4	R CAPACITOR 30M 250V 1-1/2 X 2
122-5	P0803122-5	BALL BEARING 6201ZZ (REAR)
122-6	P0803122-6	BALL BEARING 6202ZZ (FRONT)
123	P0803123	GASKET
124	P0803124	MOTOR PULLEY
128	P0803128	CAP SCREW M8-1.25 X 25
129	P0803129	POWER CORD 18G 3W 72" 5-15P

REF	PART #	DESCRIPTION
130	P0803130	WRENCH 8 X 10MM OPEN-ENDS
131	P0803131	HEX WRENCH 6MM
132	P0803132	PUSH STICK
133	P0803133	STORAGE HOOK M6-1
135	P0803135	FENCE BODY
137	P0803137	END CAP 25 X 52
138	P0803138	SPACER PLATE
140	P0803140	FENCE BASE
141	P0803141	SHAFT 8 X 77
142	P0803142	FENCE HANDLE LOCKING CAM
143	P0803143	FENCE HANDLE M6-1 X 10
144	P0803144	PHLP HD SCR M5-.8 X 6
145	P0803145	SPRING PLATE
147	P0803147	GUIDE RAIL CAP (LEFT)
148	P0803148	GUIDE RAIL
149	P0803149	FENCE RAIL KNOB M6-1 X 16
150	P0803150	FENCE RAIL KNOB M6-1 X 24
151	P0803151	GUIDE RAIL CAP (RIGHT)
152	P0803152	"D" NUT M6-1
153	P0803153	HEX NUT M4-.7
155	P0803155	LED DRIVER HOPESTAR LED-5V700 120V 5.5W
156	P0803156	CAP SCREW M4-.7 X 12
158	P0803158	WORK LAMP ASSEMBLY
159	P0803159	BULB LED 5.5W 2V PUSH-IN
160	P0803160	HEX WRENCH 4MM
161	P0803161	HEX WRENCH 2.5MM
162	P0803162	MOTOR CORD 18G 3W 12"

Labels

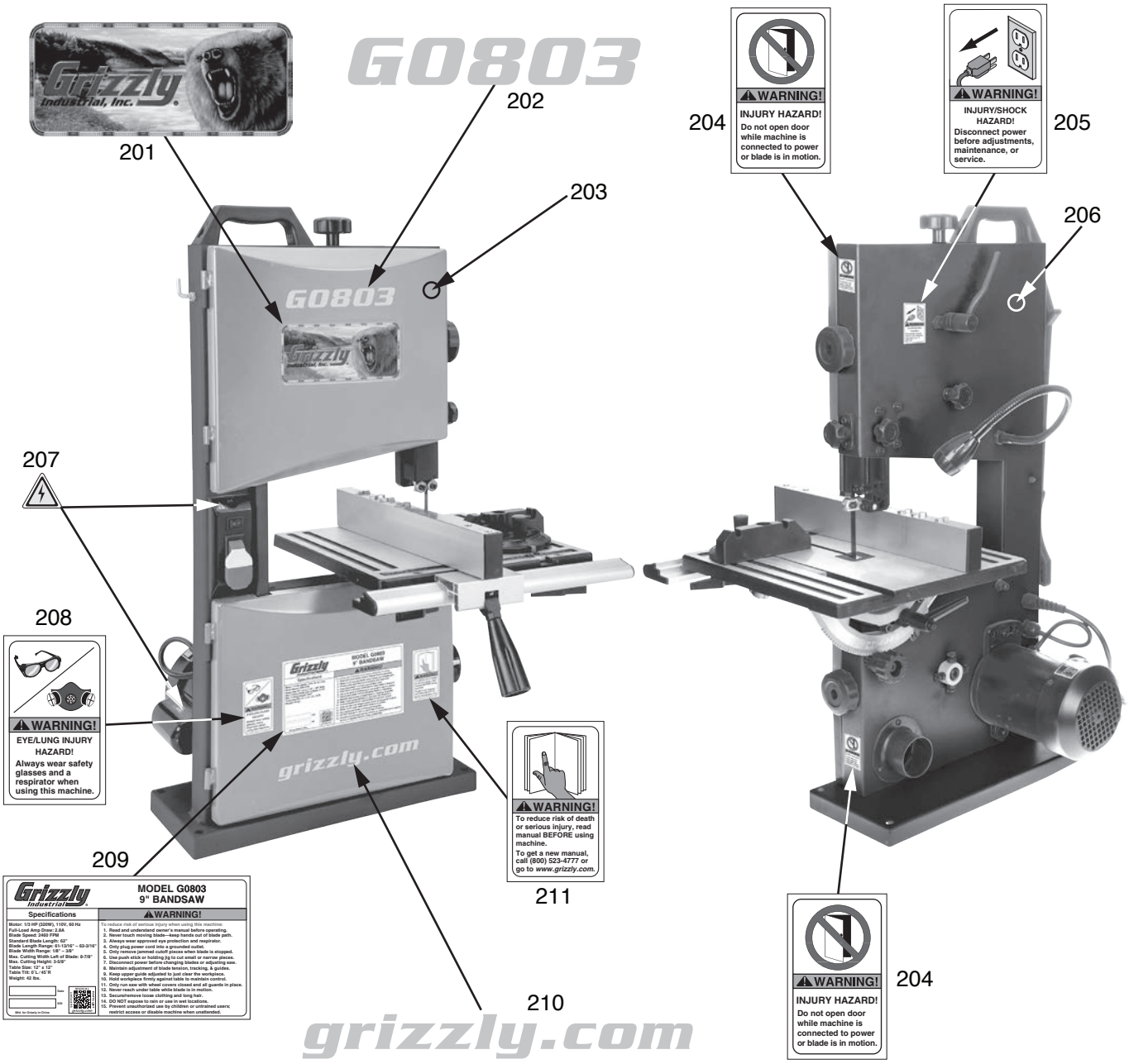

REF	PART #	DESCRIPTION
201	P0803201	GRIZZLY INDUSTRIAL LOGO LABEL
202	P0803202	MODEL NUMBER LABEL
203	P0803203	GRIZZLY GREEN TOUCH-UP PAINT
204	P0803204	DO NOT OPEN DOOR LABEL
205	P0803205	DISCONNECT POWER LABEL
206	P0803206	GRIZZLY BLACK TOUCH-UP PAINT

REF	PART #	DESCRIPTION
207	P0803207	ELECTRICITY LABEL
208	P0803208	EYE/LUNG INJURY HAZARD LABEL
209	P0803209	MACHINE ID LABEL
210	P0803210	GRIZZLY.COM LABEL
211	P0803211	READ MANUAL LABEL

⚠WARNING

Safety labels help reduce the risk of serious injury caused by machine hazards. If any label comes off or becomes unreadable, the owner of this machine MUST replace it in the original location before resuming operations. For replacements, contact (800) 523-4777 or www.grizzly.com.

Grizzly Industrial, Inc. WARRANTY CARD

Name _____

Street _____

City _____ State _____ Zip _____

Phone # _____ Email _____

Model # _____ Order # _____ Serial # _____

The following information is given on a voluntary basis. It will be used for marketing purposes to help us develop better products and services. ***Of course, all information is strictly confidential.***

1. How did you learn about us?

____ Advertisement ____ Friend ____ Catalog
____ Card Deck ____ Website ____ Other:

2. Which of the following magazines do you subscribe to?

____ Cabinetmaker & FDM
____ Family Handyman
____ Hand Loader
____ Handy
____ Home Shop Machinist
____ Journal of Light Cont.
____ Live Steam
____ Model Airplane News
____ Old House Journal
____ Popular Mechanics
____ Popular Science
____ Popular Woodworking
____ Precision Shooter
____ Projects in Metal
____ RC Modeler
____ Rifle
____ Shop Notes
____ Shotgun News
____ Today's Homeowner
____ Wood
____ Wooden Boat
____ Woodshop News
____ Woodsmith
____ Woodwork
____ Woodworker West
____ Woodworker's Journal
____ Other:

3. What is your annual household income?

____ $20,000-$29,000 ____ $30,000-$39,000 ____ $40,000-$49,000
____ $50,000-$59,000 ____ $60,000-$69,000 ____ $70,000+

4. What is your age group?

____ 20-29 ____ 30-39 ____ 40-49
____ 50-59 ____ 60-69 ____ 70+

5. How long have you been a woodworker/metalworker?

____ 0-2 Years ____ 2-8 Years ____ 8-20 Years ____ 20+ Years

6. How many of your machines or tools are Grizzly?

____ 0-2 ____ 3-5 ____ 6-9 ____ 10+

7. Do you think your machine represents a good value? _____Yes _____No

8. Would you recommend Grizzly Industrial to a friend? _____Yes _____No

9. Would you allow us to use your name as a reference for Grizzly customers in your area?
Note: *We never use names more than 3 times.* _____Yes _____No

10. Comments: _____

_____

_____

CUT ALONG DOTTED LINE

FOLD ALONG DOTTED LINE

Place
Stamp
Here

GRIZZLY INDUSTRIAL, INC.
P.O. BOX 2069
BELLINGHAM, WA 98227-2069

FOLD ALONG DOTTED LINE

Send a Grizzly Catalog to a friend:

Name_____

Street_____

City_____State_____Zip_____

TAPE ALONG EDGES--PLEASE DO NOT STAPLE

WARRANTY AND RETURNS

Grizzly Industrial, Inc. warrants every product it sells for a period of **1 year** to the original purchaser from the date of purchase. This warranty does not apply to defects due directly or indirectly to misuse, abuse, negligence, accidents, repairs or alterations or lack of maintenance. This is Grizzly's sole written warranty and any and all warranties that may be implied by law, including any merchantability or fitness, for any particular purpose, are hereby limited to the duration of this written warranty. We do not warrant or represent that the merchandise complies with the provisions of any law or acts unless the manufacturer so warrants. In no event shall Grizzly's liability under this warranty exceed the purchase price paid for the product and any legal actions brought against Grizzly shall be tried in the State of Washington, County of Whatcom.

We shall in no event be liable for death, injuries to persons or property or for incidental, contingent, special, or consequential damages arising from the use of our products.

To take advantage of this warranty, contact us by mail or phone and give us all the details. We will then issue you a "Return Number," which must be clearly posted on the outside as well as the inside of the carton. We will not accept any item back without this number. Proof of purchase must accompany the merchandise.

The manufacturers reserve the right to change specifications at any time because they constantly strive to achieve better quality equipment. We make every effort to ensure that our products meet high quality and durability standards and we hope you never need to use this warranty.

Please feel free to write or call us if you have any questions about the machine or the manual.

Thank you again for your business and continued support. We hope to serve you again soon.