MODEL G0835
24" X 24" BOWL TURNING LATHE
MANUAL INSERT

For Machines Mfd. Since 11/17
and Owner's Manual Revised 03/18

The Model G0835 is the same machine as the Model G0800 except it has a shorter bed and a different motor. Except for the differences noted in this insert, all other content in the Model G0800 owner's manual applies to this machine.

⚠WARNING: To reduce the risk of serious injury, you MUST read and understand this insert—and the entire Model G0800 manual—BEFORE assembling, installing, or operating this machine!

If you have any further questions about this manual insert or the differences between the Model G0835 and the Model G0800, contact our Technical Support at ***(570) 546-9663*** *or email* ***techsupport@grizzly.com****.*

G0835 Specifications

Product Dimensions:

Weight ..... 706 lbs.
Width (side-to-side) x Depth (front-to-back) x Height ..... 66 x 28 x 58 in.
Footprint (Length x Width) ..... 43-1/2 x 24-1/2 in.

Shipping Dimensions:

Weight ..... 780 lbs.

Operation Information:

Distance Between Centers ..... 24 in.
Max. Distance Tool Rest to Spindle Center ..... 15-1/2 in.
Spindle Speed Range ..... 60–2300 RPM

Features:
Low Spindle Speed Range of 60 to 1200 RPM and a High Speed Range of 120–2300 RPM

G0835 Parts

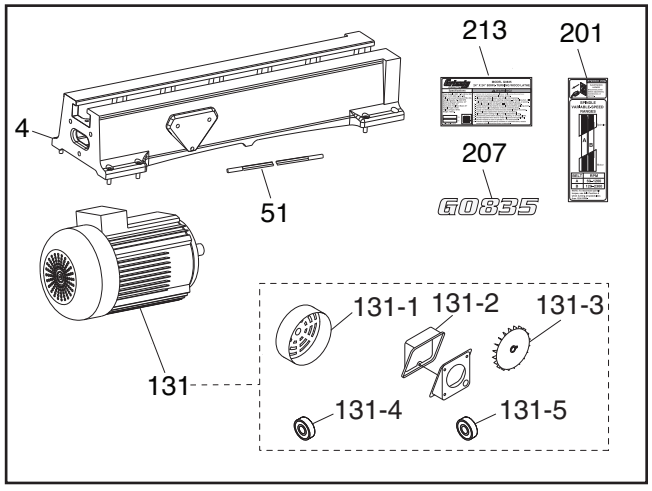

REF	PART #	DESCRIPTION
4	P0835004	BED
51	P0835051	CHISEL PAN MOUNTING ROD
131	P0835131	MOTOR 3HP 220V 3-PH
131-1	P0835131-1	MOTOR FAN COVER
131-2	P0835131-2	MOTOR JUNCTION BOX
131-3	P0835131-3	MOTOR FAN
131-4	P0835131-4	BALL BEARING 6205ZZ (FRONT)
131-5	P0835131-5	BALL BEARING 6205ZZ (BACK)
201	P0835201	SPINDLE RANGE LABEL
207	P0835207	SPINDLE PIN NOTICE
213	P0835213	MACHINE ID LABEL

COPYRIGHT © MARCH, 2018 BY GRIZZLY INDUSTRIAL, INC.
WARNING: NO PORTION OF THIS MANUAL MAY BE REPRODUCED IN ANY SHAPE OR FORM WITHOUT THE WRITTEN APPROVAL OF GRIZZLY INDUSTRIAL, INC.
#BL19470 PRINTED IN CHINA

MACHINE DATA SHEET

Customer Service #: (570) 546-9663 · To Order Call: (800) 523-4777 · Fax #: (800) 438-5901

MODEL G0835 24" X 24" BOWL TURNING WOOD LATHE

Product Dimensions:

Weight	706 lbs.
Width (side-to-side) x Depth (front-to-back) x Height	66 x 28 x 58 in.
Footprint (Length x Width)	43-1/2 x 24-1/2 in.

Shipping Dimensions:

Type	Cardboard Box on Wood Skids
Content	Machine
Weight	780 lbs.
Length x Width x Height	58 x 31 x 30 in.
Must Ship Upright	Yes

Electrical:

Power Requirement	220V, Single-Phase, 60Hz
Full-Load Current Rating	15.8A
Minimum Circuit Size	20A
Connection Type	Cord & Plug
Power Cord Included	Yes
Power Cord Length	6 ft.
Power Cord Gauge	14 AWG
Plug Included	Yes
Included Plug Type	6-20
Switch Type	Push Button
Inverter (VFD) Type	Delta VFD022E21A
Inverter (VFD) Size	3 HP

Motors:

Main

Horsepower	3 HP
Phase	3-Phase
Amps	8.5A
Speed	1720 RPM
Type	TEFC Induction
Power Transfer	Belt Drive
Bearings	Sealed & Permanently Lubricated
Centrifugal Switch/Contacts Type	N/A

Main Specifications:

Operation Information

Swing Over Bed	24 in.
Swing Over Tool Rest Base	20 in.
Distance Between Centers	24 in.
Max. Distance Tool Rest to Spindle Center	15-1/2 in.
No of Spindle Speeds	Variable
Spindle Speed Range	60–2300 RPM
Floor to Center Height	46 in.
Headstock Rotation	Fixed

Spindle Information

Spindle Taper	MT#2
Spindle Thread Size	1-1/4 in. x 8 TPI
Spindle Thread Direction	Right-Hand
Spindle Bore	0.625 in.
Type of Included Spindle Center	Spur
Indexed Spindle Increments	7.5 deg.
No of Indexes	48
Outboard Spindle Thread Direction	Right
Outboard Spindle Size	1-1/4 in.
Outboard Spindle TPI	8 TPI

Tool Rest Information

Tool Rest Width	14-1/4 in.
Tool Rest Post Diameter	1 in.
Tool Rest Post Length	5-5/16 in.
Tool Rest Base Height	2-5/16 in.

Tailstock Information

Tailstock Taper	MT#2
Type of Included Tailstock Center	Live

Construction

Bed	Cast Iron
Frame	Cast Iron
Stand	Cast Iron
Headstock	Cast Iron
Tailstock	Cast Iron
Paint Type/Finish	Enamel

Other Related Information

Bed Width	8-5/16 in.
Faceplate Size	3-1/4 in.

Other Specifications:

Country of Origin	China
Warranty	1 Year
Approximate Assembly & Setup Time	1 Hour
Serial Number Location	ID Label
ISO 9001 Factory	Yes
Certified by a Nationally Recognized Testing Laboratory (NRTL)	No

Features:

Electronic Variable-Speed Spindle Control with Digital RPM Readout
Forward/Reverse Switch
15" Maximum Distance from Tool Rest to Spindle Centerline
Low Spindle Speed Range of 60-1200 RPM and High Spindle Speed Range of 120-2300 RPM
Capability to Position Headstock Anywhere Along the Bed
7.5 Degree Spindle Indexing
Tailstock, Headstock, and Tool Rest Support have Lever-Action Cam-Locks for Quick Positioning
Adjustable Leveling Feet
4-1/2" Tailstock Quill Travel
Built-In Tool Holder

SECTION 2: POWER SUPPLY

Availability

Before installing the machine, consider the availability and proximity of the required power supply circuit. If an existing circuit does not meet the requirements for this machine, a new circuit must be installed. To minimize the risk of electrocution, fire, or equipment damage, installation work and electrical wiring must be done by an electrician or qualified service personnel in accordance with all applicable codes and standards.

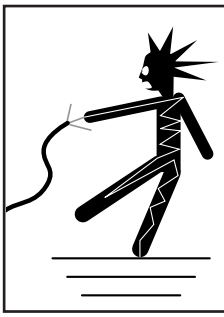

⚠WARNING

Electrocution, fire, shock, or equipment damage may occur if machine is not properly grounded and connected to power supply.

Full-Load Current Rating

The full-load current rating is the amperage a machine draws at 100% of the rated output power. On machines with multiple motors, this is the amperage drawn by the largest motor or sum of all motors and electrical devices that might operate at one time during normal operations.

Full-Load Current Rating at 220V .. 15.8 Amps

The full-load current is not the maximum amount of amps that the machine will draw. If the machine is overloaded, it will draw additional amps beyond the full-load rating.

If the machine is overloaded for a sufficient length of time, damage, overheating, or fire may result—especially if connected to an undersized circuit. To reduce the risk of these hazards, avoid overloading the machine during operation and make sure it is connected to a power supply circuit that meets the specified circuit requirements.

Circuit Information

A power supply circuit includes all electrical equipment between the breaker box or fuse panel in the building and the machine. The power supply circuit used for this machine must be sized to safely handle the full-load current drawn from the machine for an extended period of time. (If this machine is connected to a circuit protected by fuses, use a time delay fuse marked D.)

⚠CAUTION

For your own safety and protection of property, consult an electrician if you are unsure about wiring practices or electrical codes in your area.

Note: *Circuit requirements in this manual apply to a dedicated circuit—where only one machine will be running on the circuit at a time. If machine will be connected to a shared circuit where multiple machines may be running at the same time, consult an electrician or qualified service personnel to ensure circuit is properly sized for safe operation.*

Circuit Requirements

This machine is prewired to operate on a power supply circuit that has a verified ground and meets the following requirements:

Nominal Voltage 208V, 220V, 230V, 240V
Cycle ..... 60 Hz
Phase ..... Single-Phase
Power Supply Circuit ..... 20 Amps
Plug/Receptacle ..... NEMA 6-20

Grounding Requirements

This machine MUST be grounded. In the event of certain malfunctions or breakdowns, grounding reduces the risk of electric shock by providing a path of least resistance for electric current.

This machine is equipped with a power cord that has an equipment-grounding wire and a grounding plug. Only insert plug into a matching receptacle (outlet) that is properly installed and grounded in accordance with all local codes and ordinances. DO NOT modify the provided plug!

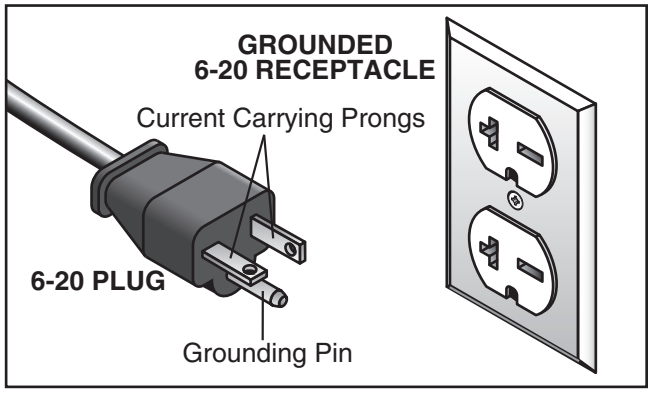

Figure 1. Typical 6-20 plug and receptacle.

⚠CAUTION

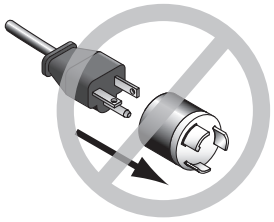

No adapter should be used with plug. If plug does not fit available receptacle, or if machine must be reconnected for use on a different type of circuit, reconnection must be performed by an electrician or qualified service personnel, and it must comply with all local codes and ordinances.

⚠WARNING

Serious injury could occur if you connect machine to power before completing setup process. DO NOT connect to power until instructed later in this manual.

Improper connection of the equipment-grounding wire can result in a risk of electric shock. The wire with green insulation (with or without yellow stripes) is the equipment-grounding wire. If repair or replacement of the power cord or plug is necessary, do not connect the equipment-grounding wire to a live (current carrying) terminal.

Check with a qualified electrician or service personnel if you do not understand these grounding requirements, or if you are in doubt about whether the tool is properly grounded. If you ever notice that a cord or plug is damaged or worn, disconnect it from power, and immediately replace it with a new one.

Extension Cords

We do not recommend using an extension cord with this machine. If you must use an extension cord, only use it if absolutely necessary and only on a temporary basis.

Extension cords cause voltage drop, which can damage electrical components and shorten motor life. Voltage drop increases as the extension cord size gets longer and the gauge size gets smaller (higher gauge numbers indicate smaller sizes).

Any extension cord used with this machine must be in good condition and contain a ground wire and matching plug/receptacle. Additionally, it must meet the following size requirements:

Minimum Gauge Size .....12 AWG
Maximum Length (Shorter is Better).....50 ft.

Site Considerations

Weight Load

Refer to the **Machine Data Sheet** for the weight of your machine. Make sure that the surface upon which the machine is placed will bear the weight of the machine, additional equipment that may be installed on the machine, and the heaviest workpiece that will be used. Additionally, consider the weight of the operator and any dynamic loading that may occur when operating the machine.

Space Allocation

Consider the largest size of workpiece that will be processed through this machine and provide enough space around the machine for adequate operator material handling or the installation of auxiliary equipment. With permanent installations, leave enough space around the machine to open or remove doors/covers as required by the maintenance and service described in this manual. **See below for required space allocation.**

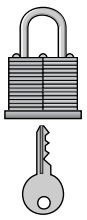

⚠CAUTION

Children or untrained people may be seriously injured by this machine. Only install in an access restricted location.

Physical Environment

The physical environment where the machine is operated is important for safe operation and longevity of machine components. For best results, operate this machine in a dry environment that is free from excessive moisture, hazardous chemicals, airborne abrasives, or extreme conditions. Extreme conditions for this type of machinery are generally those where the ambient temperature range exceeds 41°–104°F; the relative humidity range exceeds 20%–95% (non-condensing); or the environment is subject to vibration, shocks, or bumps.

Electrical Installation

Place this machine near an existing power source. Make sure all power cords are protected from traffic, material handling, moisture, chemicals, or other hazards. Make sure to leave enough space around machine to disconnect power supply or apply a lockout/tagout device, if required.

Lighting

Lighting around the machine must be adequate enough that operations can be performed safely. Shadows, glare, or strobe effects that may distract or impede the operator must be eliminated.

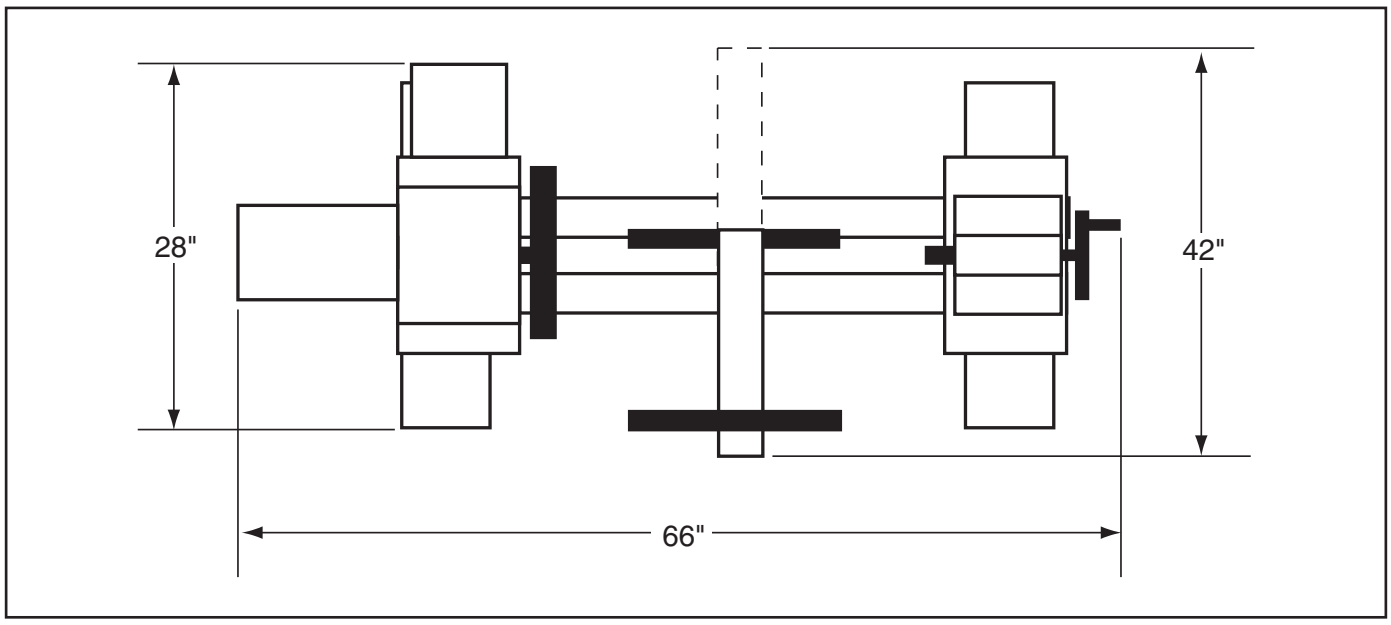

Figure 2. Minimum working clearances.

Assembly

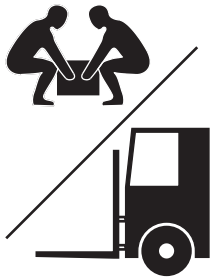

⚠WARNING

HEAVY LIFT!

Straining or crushing injury may occur from improperly lifting machine or some of its parts. To reduce this risk, get help from other people and use a forklift (or other lifting equipment) rated for weight of this machine.

The machine must be fully assembled before it can be operated. Before beginning the assembly process, refer to **Needed for Setup** and gather all listed items. To ensure the assembly process goes smoothly, first clean any parts that are covered or coated in heavy-duty rust preventative (if applicable).

To assemble lathe:

1. Position stand legs upright approximately 37¾" apart, and align them reasonably well (see **Figure 3**).

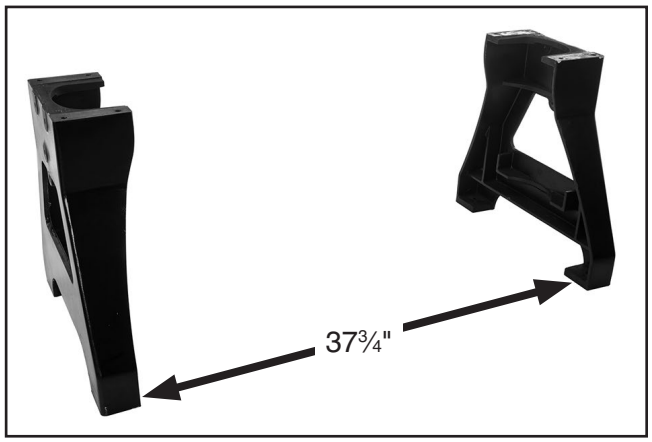

Figure 3. Stand legs aligned and correctly positioned 37¾" apart.

2. Follow **Assembly Steps 2–20** in the G0799/G0800 Owner's Manual to complete the assembly process. Disregard **Steps 21–25**, as they do not apply.

Changing Speed Ranges

The pulley belt configurations on this lathe provide two speed ranges (see **Figure 4**).

Note: *To maximize spindle torque, use low spindle speed range for spindle speeds of 1200 RPM or less.*

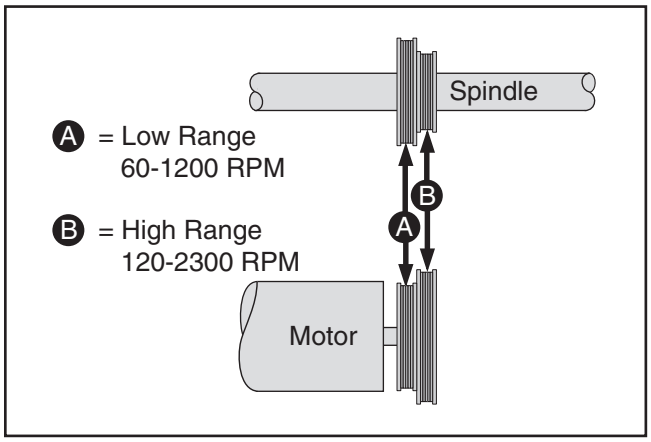

Figure 4. Speed range belt positions.

Refer to **Pages 35–36** in the G0799/G0800 Owner's Manual for all other information on changing speed ranges.

SECTION 8: WIRING

These pages are current at the time of printing. However, in the spirit of improvement, we may make changes to the electrical systems of future machines. Compare the manufacture date of your machine to the one stated in this manual, and study this section carefully.

If there are differences between your machine and what is shown in this section, call Technical Support at (570) 546-9663 for assistance BEFORE making any changes to the wiring on your machine. An updated wiring diagram may be available. **Note:** *Please gather the serial number and manufacture date of your machine before calling. This information can be found on the main machine label.*

⚠WARNING
Wiring Safety Instructions

SHOCK HAZARD. Working on wiring that is connected to a power source is extremely dangerous. Touching electrified parts will result in personal injury including but not limited to severe burns, electrocution, or death. Disconnect the power from the machine before servicing electrical components!

MODIFICATIONS. Modifying the wiring beyond what is shown in the diagram may lead to unpredictable results, including serious injury or fire. This includes the installation of unapproved aftermarket parts.

WIRE CONNECTIONS. All connections must be tight to prevent wires from loosening during machine operation. Double-check all wires disconnected or connected during any wiring task to ensure tight connections.

CIRCUIT REQUIREMENTS. You MUST follow the requirements at the beginning of this manual when connecting your machine to a power source.

WIRE/COMPONENT DAMAGE. Damaged wires or components increase the risk of serious personal injury, fire, or machine damage. If you notice that any wires or components are damaged while performing a wiring task, replace those wires or components.

MOTOR WIRING. The motor wiring shown in these diagrams is current at the time of printing but may not match your machine. If you find this to be the case, use the wiring diagram inside the motor junction box.

CAPACITORS/INVERTERS. Some capacitors and power inverters store an electrical charge for up to 10 minutes after being disconnected from the power source. To reduce the risk of being shocked, wait at least this long before working on capacitors.

EXPERIENCING DIFFICULTIES. If you are experiencing difficulties understanding the information included in this section, contact our Technical Support at (570) 546-9663.

NOTICE

The photos and diagrams included in this section are best viewed in color. You can view these pages in color at www.grizzly.com.

COLOR KEY

BLACK	Bk	BLUE	Bl	YELLOW	Yl	LIGHT BLUE	Lb
WHITE	Wt	BROWN	Br	YELLOW GREEN	Yg	BLUE WHITE	Bw
GREEN	Gn	GRAY	Gy	PURPLE	Pu	TURQUOISE	Tu
RED	Rd	ORANGE	Or	PINK	Pk		

G0835 Electrical Components

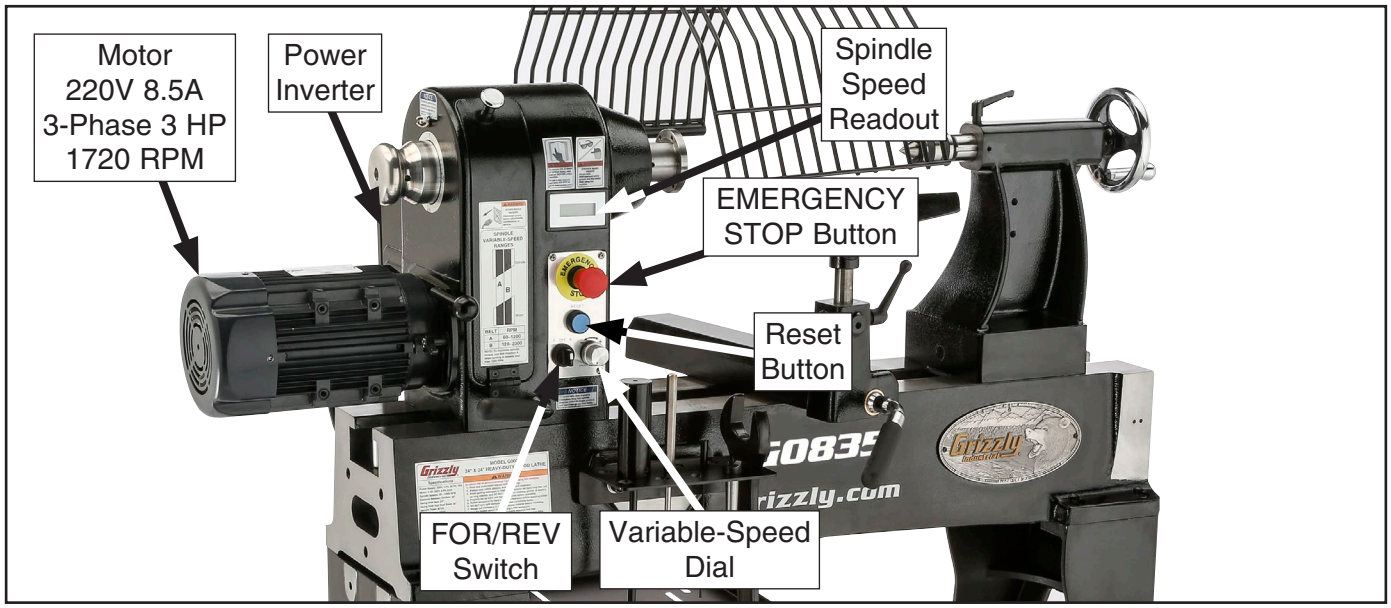

Figure 5. Location of electrical components.

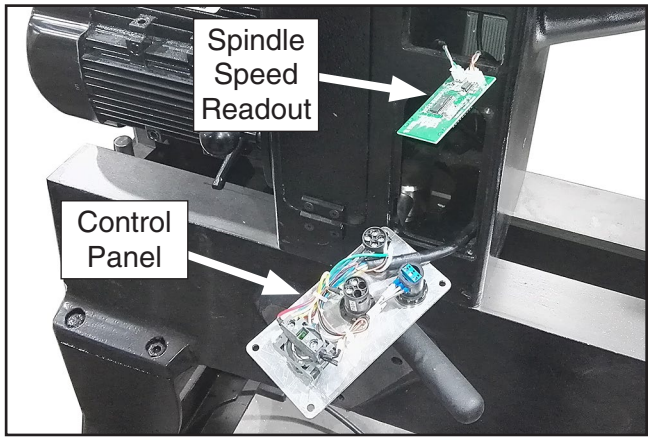

Figure 6. Control panel and spindle speed readout components.

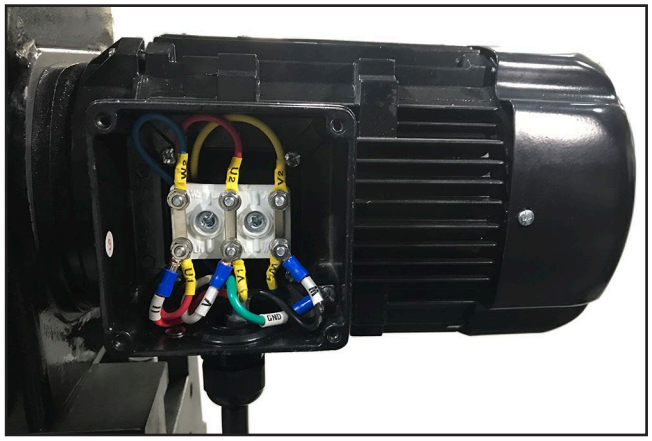

Figure 7. Motor ID label and junction box.

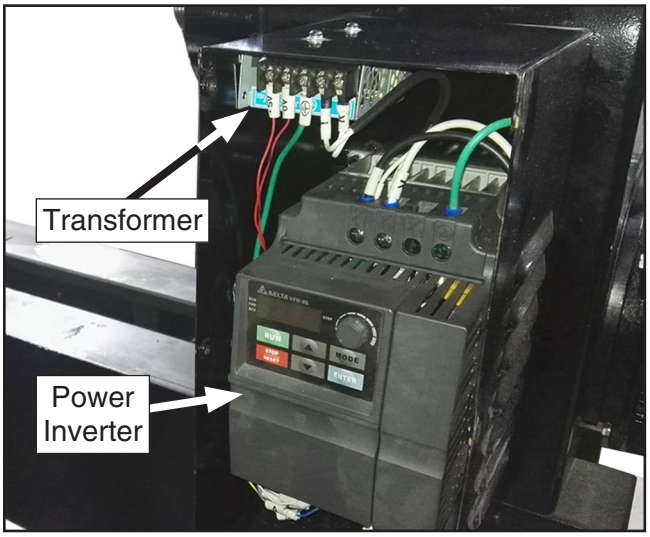

Figure 8. Power inverter electrical box.

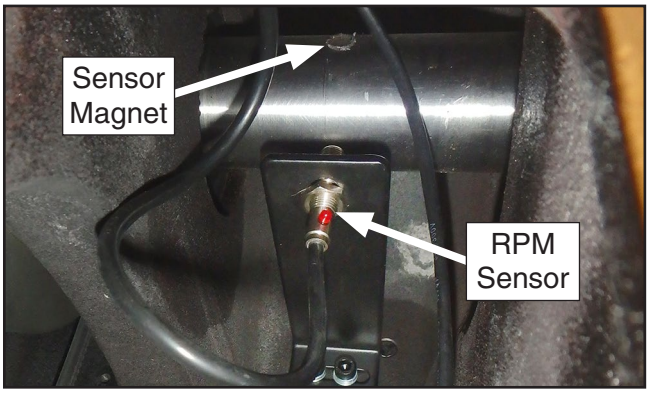

Figure 9. RPM sensor and sensor magnet.

STOP *READ ELECTRICAL SAFETY ON PAGE 8!*

G0835 Wiring Diagram

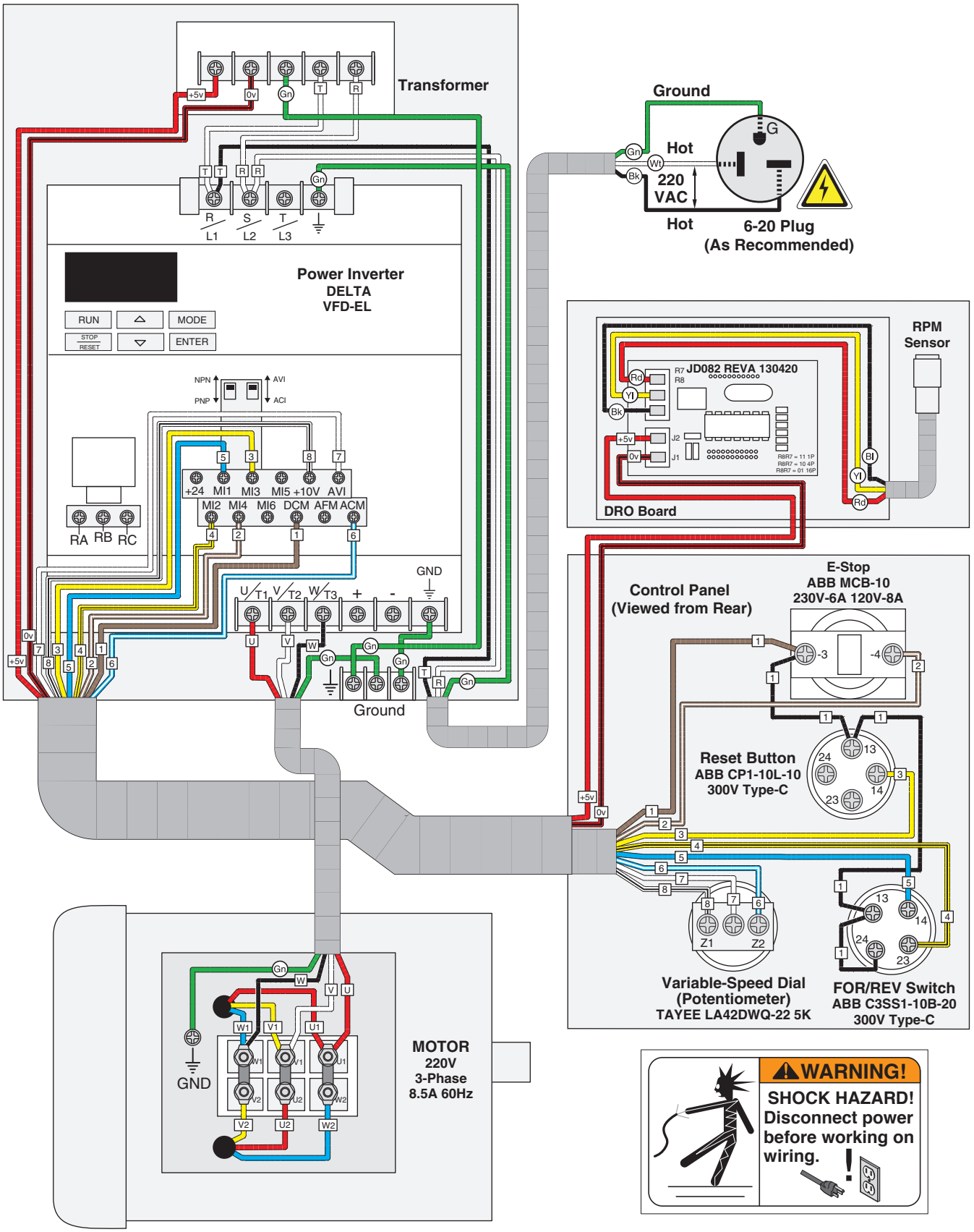

STOP *READ ELECTRICAL SAFETY ON PAGE 8!*

SECTION 9: PARTS

Main

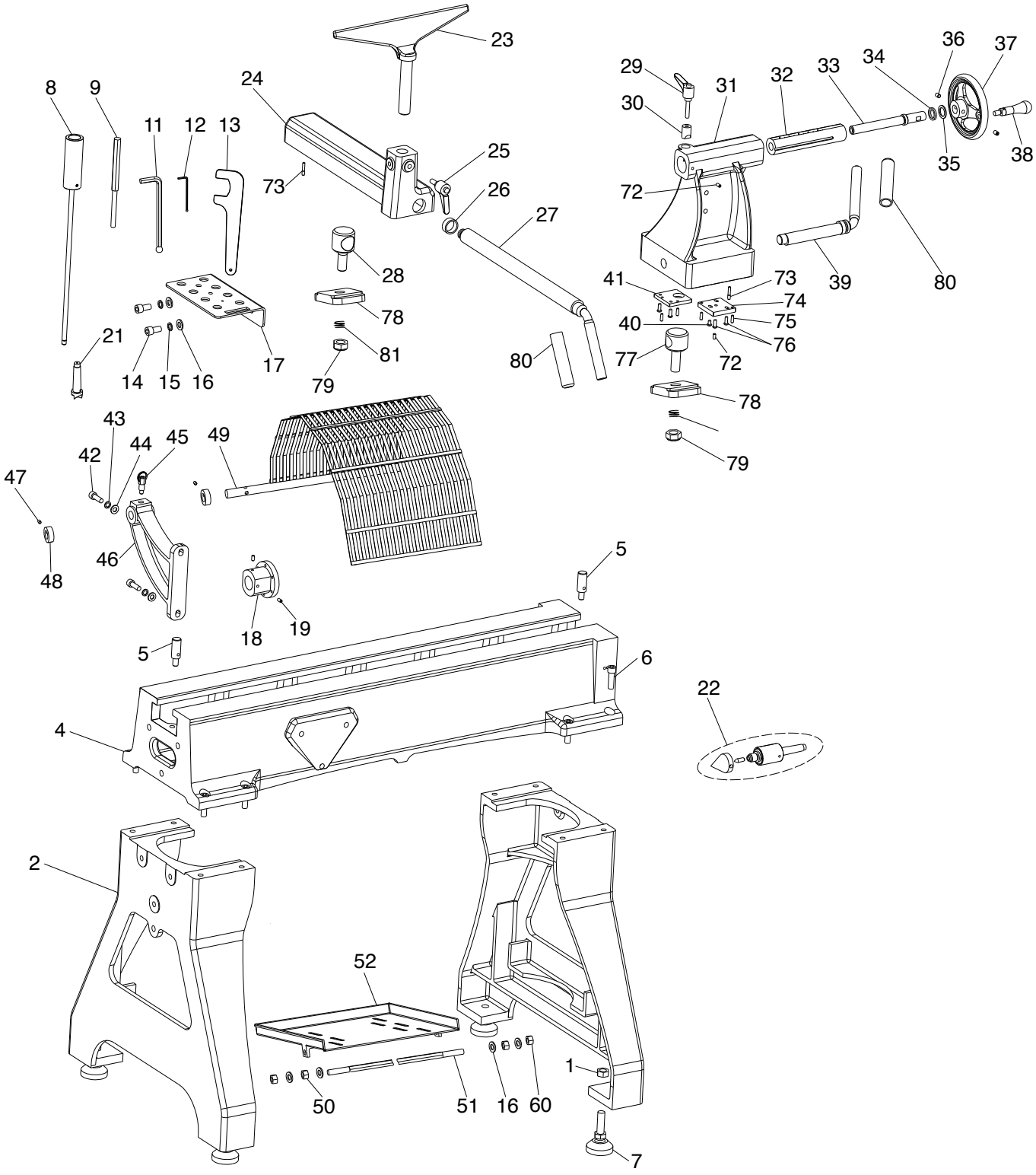

Please Note: *We do our best to stock replacement parts whenever possible, but we cannot guarantee that all parts shown here are available for purchase. Call* ***(800) 523-4777*** *or visit our online parts store at* ***www.grizzly.com*** *to check for availability.*

Main Parts List

REF	PART #	DESCRIPTION
1	P0835001	HEX NUT M16-2
2	P0835002	STAND
4	P0835004	BED
5	P0835005	BED STOP M12-1.75 X 20, 66L
6	P0835006	CAP SCREW M12-1.75 X 35
7	P0835007	LEVELING FOOT M16-2 X 65
8	P0835008	KNOCKOUT ROD
9	P0835009	LOCATING ROD
11	P0835011	HEX WRENCH 10MM
12	P0835012	HEX WRENCH 3MM
13	P0835013	WRENCH 50MM OPEN-END
14	P0835014	CAP SCREW M12-1.75 X 20
15	P0835015	LOCK WASHER 12MM
16	P0835016	FLAT WASHER 12MM
17	P0835017	TOOL HOLDER
18	P0835018	FACEPLATE 3"
19	P0835019	SET SCREW M6-1 X 10
21	P0835021	SPUR CENTER MT#2
22	P0835022	LIVE CENTER MT#2
23	P0835023	TOOL REST
24	P0835024	TOOL REST BASE
25	P0835025	ADJUSTABLE HANDLE 80L, M10-1.5 X 25
26	P0835026	BRASS SLEEVE
27	P0835027	TOOL REST LOCK HANDLE
28	P0835028	TOOL REST CLAMP BOLT
29	P0835029	ADJUSTABLE HANDLE 80L, M10-1.5 X 45
30	P0835030	LOCK SLEEVE
31	P0835031	TAILSTOCK
32	P0835032	TAILSTOCK QUILL
33	P0835033	LEADSCREW

REF	PART #	DESCRIPTION
34	P0835034	SPACER
35	P0835035	WASHER 20 X 35 X 2.5MM (PLASTIC)
36	P0835036	SET SCREW M8-1.25 X 10
37	P0835037	HANDWHEEL TYPE-3 150D X 20B X M10-1.5
38	P0835038	HANDWHEEL HANDLE M10-1.5, 28 X 80L
39	P0835039	TAILSTOCK LOCK HANDLE
40	P0835040	BUTTON HD CAP SCR M6-1 X 12
41	P0835041	TAILSTOCK MOUNTING BLOCK
42	P0835042	CAP SCREW M10-1.5 X 30
43	P0835043	LOCK WASHER 10MM
44	P0835044	FLAT WASHER 10MM
45	P0835045	SPRING PIN BOLT M12-1.75 X 18, 8 X 8
46	P0835046	CHUCK GUARD MOUNTING ARM
47	P0835047	SET SCREW M6-1 X 8
48	P0835048	CHUCK GUARD LOCK COLLAR
49	P0835049	CHUCK GUARD
50	P0835050	HEX NUT M12-1.75
51	P0835051	CHISEL PAN MOUNTING ROD
52	P0835052	CHISEL PAN
60	P0835060	LOCK NUT M12-1.75
72	P0835072	SET SCREW M6-1 X 12, 30L
73	P0835073	DOWEL PIN M6-1 X 10
74	P0835074	MOUNTING BLOCK
75	P0835075	TAPER PIN 6 X 20
76	P0835076	BUTTON HD CAP SCR M6-1 X 16
77	P0835077	CLAMP BOLT
78	P0835078	CLAMP BLOCK
79	P0835079	LOCK NUT M20-2.5
80	P0835080	HANDLE GRIP 22ID X 120L X 3T (RUBBER)
81	P0835081	COMPRESSION SPRING 1.4 X 25.8 X 12

BUY PARTS ONLINE AT GRIZZLY.COM!
Scan QR code to visit our Parts Store.

Headstock

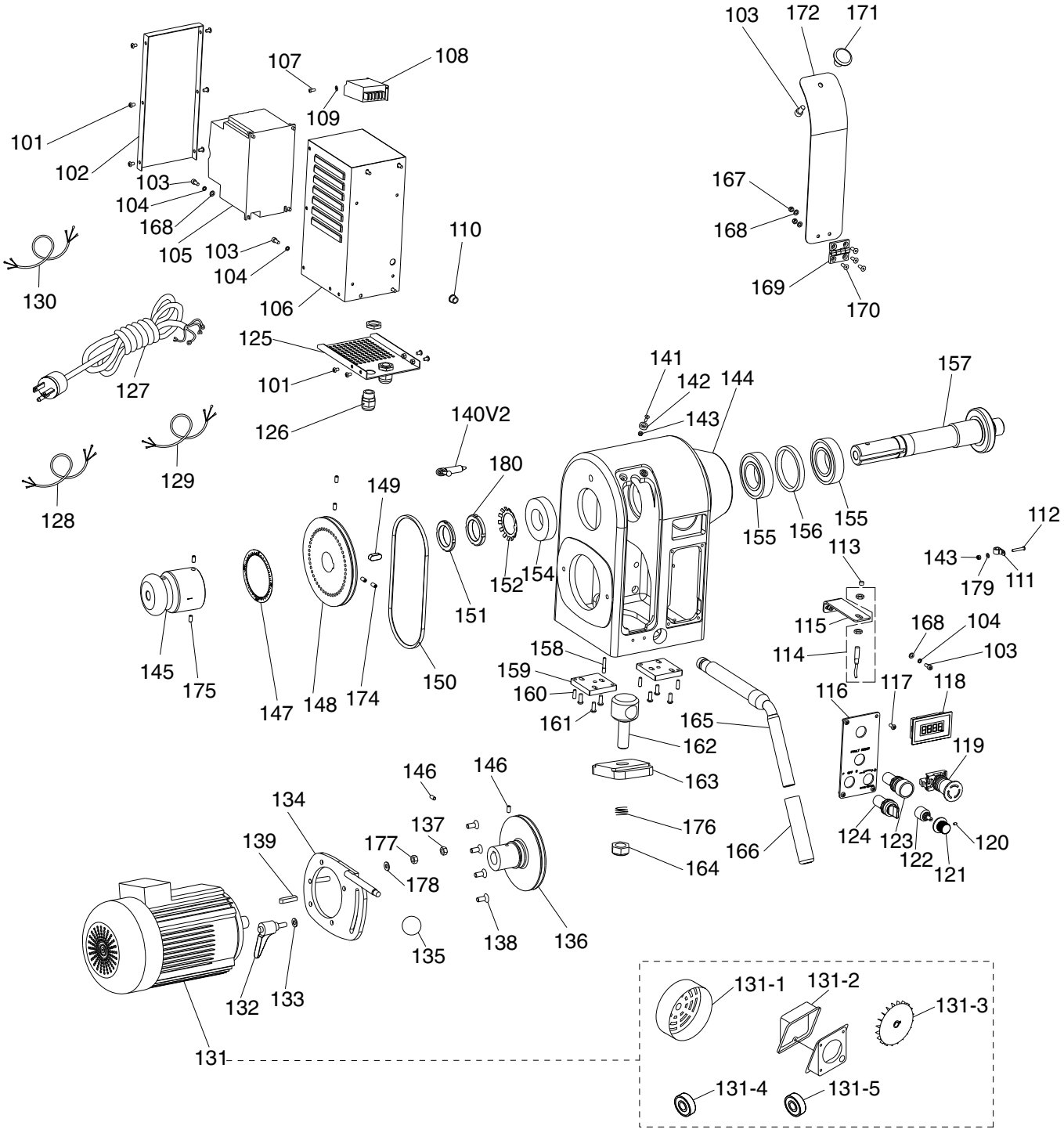

BUY PARTS ONLINE AT GRIZZLY.COM!
Scan QR code to visit our Parts Store.

Headstock Parts List

REF	PART #	DESCRIPTION
101	P0835101	BUTTON HD CAP SCR M5-.8 X 8
102	P0835102	INVERTER BOX COVER
103	P0835103	CAP SCREW M5-.8 X 12
104	P0835104	LOCK WASHER 5MM
105	P0835105	INVERTER DELTA VFD-EL 240V
106	P0835106	INVERTER BOX
107	P0835107	CAP SCREW M3-.5 X 5
108	P0835108	TACHOMETER POWER SUPPLY 5VDC
109	P0835109	FLAT WASHER 3MM
110	P0835110	GROMMET 15MM (PLASTIC)
111	P0835111	CABLE CLAMP 3/8"
112	P0835112	BUTTON HD CAP SCR M4-.7 X 25
113	P0835113	MAGNET 8 X 5MM
114	P0835114	TACHOMETER SENSOR
115	P0835115	DRO SENSOR BRACKET
116	P0835116	CONTROL PANEL PLATE
117	P0835117	BUTTON HD CAP SCR M5-.8 X 12
118	P0835118	DIGITAL READOUT, RPM
119	P0835119	E-STOP BUTTON ABB MCB-10 22MM
120	P0835120	SET SCREW M4-.7 X 6
121	P0835121	SPEED CONTROL DAIL
122	P0835122	POTENTIOMETER TAYEE LA42DWQ 22MM
123	P0835123	BUTTON SWITCH ABB CP1-10L-10 22MM (RED)
124	P0835124	ROTARY SWITCH ABB C3SS1-10B-20 F-O-R 22MM
125	P0835125	INVERTER BOX BOTTOM
126	P0835126	STRAIN RELIEF TYPE-3 PG13.5
127	P0835127	POWER CORD 12G 3W 72" 6-20P
128	P0835128	MOTOR CORD 12G 4W 18"
129	P0835129	CONTROL PANEL CORD 9W 21G 18"
130	P0835130	TACHOMETER CORD 18G 2W 18"
131	P0835131	MOTOR 3HP 220V 3-PH
131-1	P0835131-1	MOTOR FAN COVER
131-2	P0835131-2	MOTOR JUNCTION BOX
131-3	P0835131-3	MOTOR FAN
131-4	P0835131-4	BALL BEARING 6205ZZ (FRONT)
131-5	P0835131-5	BALL BEARING 6205ZZ (BACK)
132	P0835132	ADJUSTABLE HANDLE M10-1.5 X 20L
133	P0835133	FLAT WASHER 10MM
134	P0835134	MOTOR MOUNT PLATE
135	P0835135	ROUND KNOB M10-1.5 X 30 OD (PLASTIC)
136	P0835136	MOTOR PULLEY
137	P0835137	LOCK NUT M4-.7

REF	PART #	DESCRIPTION
138	P0835138	FLAT HD CAP SCR M8-1.25 X 20
139	P0835139	KEY 6 X 6 X 50
140V2	P0835140V2	SPINDLE LOCK PIN M16-1.5 X 48
141	P0835141	FLAT HD CAP SCR M4-.7 X 12
142	P0835142	MAGNET 4 X 15 X 5
143	P0835143	LOCK NUT M4-.7
144	P0835144	HEADSTOCK CASTING
145	P0835145	SPINDLE HANDWHEEL
146	P0835146	SET SCREW M6-1 X 12
147	P0835147	DEGREE SCALE
148	P0835148	SPINDLE PULLEY
149	P0835149	KEY 10 X 10 X 25
150	P0835150	V-BELT 7M750
151	P0835151	SPANNER NUT M40-1.5 X 5
152	P0835152	TABBED WASHER 40MM
154	P0835154	BALL BEARING 6208-2RS
155	P0835155	BALL BEARING 6209-2RS
156	P0835156	SPACER
157	P0835157	SPINDLE MT#2
158	P0835158	POSITIONING PIN M6-1 X 12, 30L
159	P0835159	MOUNTING BLOCK
160	P0835160	TAPER PIN 6 X 20
161	P0835161	BUTTON HD CAP SCR M6-1 X 16
162	P0835162	CLAMP BOLT
163	P0835163	CLAMP BLOCK
164	P0835164	LOCK NUT M20-2.5
165	P0835165	HEADSTOCK LOCK HANDLE 22 X 135
166	P0835166	HANDLE GRIP 22ID X 120L X 3T (RUBBER)
167	P0835167	LOCK NUT M5-.8
168	P0835168	FLAT WASHER 5MM
169	P0835169	HINGE
170	P0835170	FLAT HD CAP SCREW M5-.8 X 16
171	P0835171	KNOB M8-1.25, 36OD X 26L
172	P0835172	BELT COVER
174	P0835174	SET SCREW M6-1 X 6
175	P0835175	SET SCREW M8-1.25 X 20 DOG-PT
176	P0835176	COMPRESSION SPRING 1.4 X 25.8 X 12
177	P0835177	HEX NUT M8-1.25
178	P0835178	FLAT WASHER 8MM
179	P0835179	FLAT WASHER 4MM
180	P0835180	SPANNER NUT M40-1.5 X 10

BUY PARTS ONLINE AT GRIZZLY.COM!
Scan QR code to visit our Parts Store.

Labels & Cosmetics

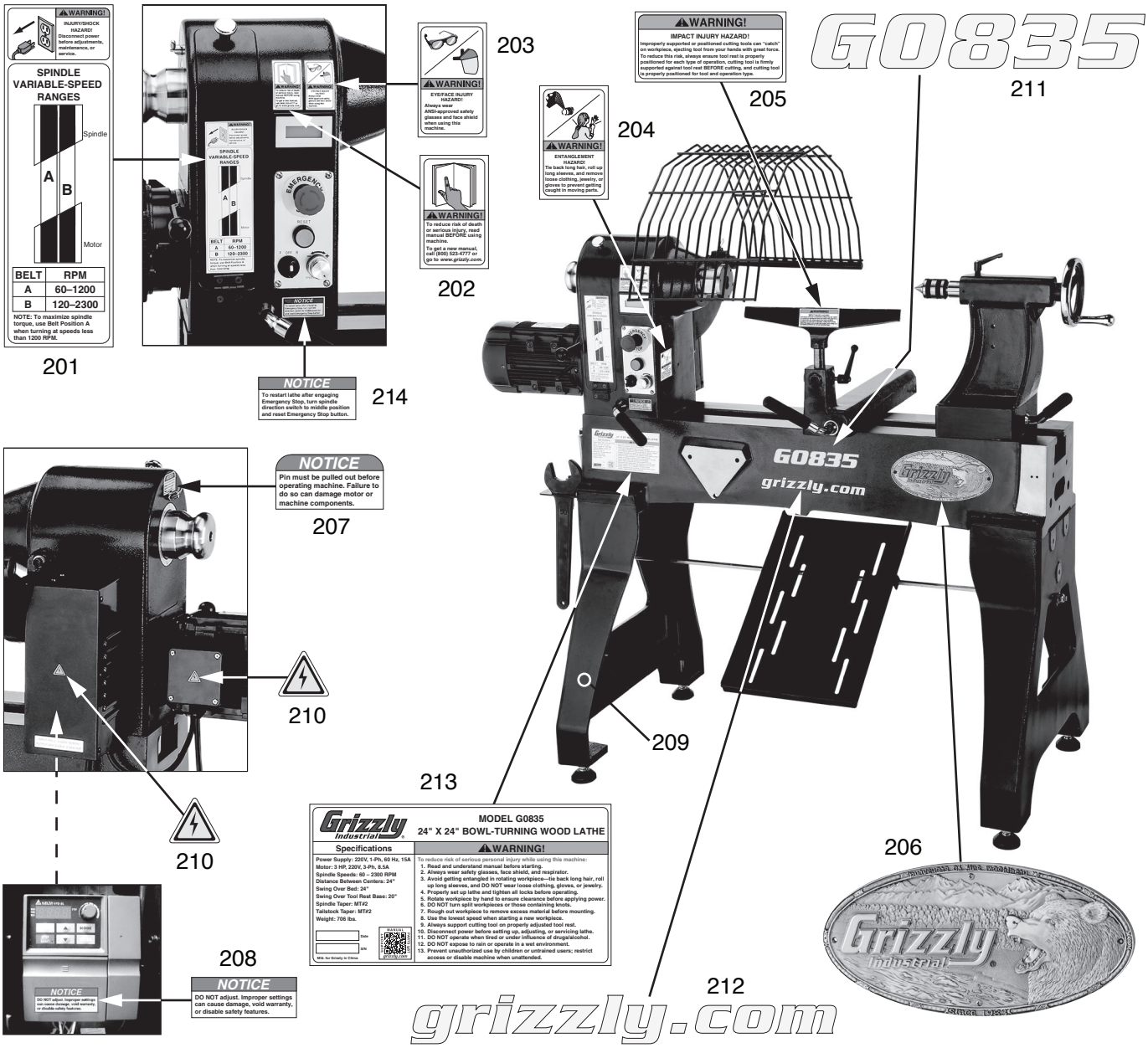

REF	PART #	DESCRIPTION
201	P0835201	SPINDLE RANGE LABEL
202	P0835202	READ MANUAL LABEL
203	P0835203	EYE/FACE INJURY LABEL
204	P0835204	ENTANGLEMENT LABEL
205	P0835205	IMPACT WARNING LABEL
206	P0835206	GRIZZLY NAMEPLATE (SMALL)
207	P0835207	SPINDLE PIN NOTICE

REF	PART #	DESCRIPTION
208	P0835208	DO NOT ADJUST VFD NOTICE
209	P0835209	TOUCH-UP PAINT, GLOSSY BLACK
210	P0835210	ELECTRICITY LABEL
211	P0835211	MODEL NUMBER LABEL
212	P0835212	GRIZZLY.COM LABEL
213	P0835213	MACHINE ID LABEL
214	P0835214	RESTART LATHE NOTICE

⚠WARNING

Safety labels help reduce the risk of serious injury caused by machine hazards. If any label comes off or becomes unreadable, the owner of this machine MUST replace it in the original location before resuming operations. For replacements, contact (800) 523-4777 or www.grizzly.com.

Grizzly Industrial, Inc.®

MODELS G0799 & G0800
20" & 24" VARIABLE-SPEED WOOD LATHES
OWNER'S MANUAL
(For models manufactured since 11/17)

COPYRIGHT © MARCH, 2016 BY GRIZZLY INDUSTRIAL, INC. REVISED MARCH, 2018 (BL)
WARNING: NO PORTION OF THIS MANUAL MAY BE REPRODUCED IN ANY SHAPE OR FORM WITHOUT THE WRITTEN APPROVAL OF GRIZZLY INDUSTRIAL, INC.
#MN17816 PRINTED IN CHINA
V2.03.18

⚠ WARNING!

This manual provides critical safety instructions on the proper setup, operation, maintenance, and service of this machine/tool. Save this document, refer to it often, and use it to instruct other operators.

Failure to read, understand and follow the instructions in this manual may result in fire or serious personal injury—including amputation, electrocution, or death.

The owner of this machine/tool is solely responsible for its safe use. This responsibility includes but is not limited to proper installation in a safe environment, personnel training and usage authorization, proper inspection and maintenance, manual availability and comprehension, application of safety devices, cutting/sanding/grinding tool integrity, and the usage of personal protective equipment.

The manufacturer will not be held liable for injury or property damage from negligence, improper training, machine modifications or misuse.

⚠ WARNING!

Some dust created by power sanding, sawing, grinding, drilling, and other construction activities contains chemicals known to the State of California to cause cancer, birth defects or other reproductive harm. Some examples of these chemicals are:

- **Lead from lead-based paints.**
- **Crystalline silica from bricks, cement and other masonry products.**
- **Arsenic and chromium from chemically-treated lumber.**

Your risk from these exposures varies, depending on how often you do this type of work. To reduce your exposure to these chemicals: Work in a well ventilated area, and work with approved safety equipment, such as those dust masks that are specially designed to filter out microscopic particles.

Table of Contents

INTRODUCTION 2
Contact Info 2
Manual Accuracy 2
Identification 3
Controls & Components 4
Glossary Of Terms 6
G0799 Machine Data Sheet 7
G0800 Machine Data Sheet 9

SECTION 1: SAFETY 11
Safety Instructions for Machinery 11
Additional Safety for Wood Lathes 13

SECTION 2: POWER SUPPLY 14

SECTION 3: SETUP 16
Needed for Setup 16
Unpacking 16
Hardware Recognition Chart 17
Inventory 18
Cleanup 20
Site Considerations 21
Assembly 22
Test Run 26
Anchoring to Floor 27

SECTION 4: OPERATIONS 28
Operation Overview 28
Workpiece Inspection 29
Adjusting Headstock 29
Adjusting Tailstock 30
Adjusting Tool Rest 30
Installing/Removing Headstock Center 32
Installing/Removing Tailstock Center 33
Installing Faceplate 34
Changing Speed Ranges 35
Indexing 36
Spindle Turning 37
Faceplate Turning 39
Outboard Turning 40
Sanding/Finishing 41
Selecting Turning Tools 42

SECTION 5: ACCESSORIES 43

SECTION 6: MAINTENANCE 45
Schedule 45
Cleaning & Protecting 45
Lubrication 45

SECTION 7: SERVICE 46
Troubleshooting 46
Tensioning/Replacing Belt 48
Aligning Pulleys 49
Removing End Play 50

SECTION 8: WIRING 51
Wiring Safety Instructions 51
G0799 & G0800 Electrical Components 52
G0799 & G0800 Wiring Diagram 53

SECTION 9: PARTS 54
Main 54
Headstock 56
Labels 58

WARRANTY & RETURNS 61

INTRODUCTION

Contact Info

We stand behind our machines! If you have questions or need help, contact us with the information below. Before contacting, make sure you get the **serial number** and **manufacture date** from the machine ID label. This will help us help you faster.

Grizzly Technical Support
1815 W. Battlefield
Springfield, MO 65807
Phone: (570) 546-9663
Email: techsupport@grizzly.com

We want your feedback on this manual. What did you like about it? Where could it be improved? Please take a few minutes to give us feedback.

Grizzly Documentation Manager
P.O. Box 2069
Bellingham, WA 98227-2069
Email: manuals@grizzly.com

Manual Accuracy

We are proud to provide a high-quality owner's manual with your new machine!

We made every effort to be exact with the instructions, specifications, drawings, and photographs in this manual. Sometimes we make mistakes, but our policy of continuous improvement also means that **sometimes the machine you receive is slightly different than shown in the manual**.

If you find this to be the case, and the difference between the manual and machine leaves you confused or unsure about something, check our website for an updated version. We post current manuals and manual updates for free on our website at **www.grizzly.com**.

Alternatively, you can call our Technical Support for help. Before calling, make sure you write down the **Manufacture Date** and **Serial Number** from the machine ID label (see below). This information is required for us to provide proper tech support, and it helps us determine if updated documentation is available for your machine.

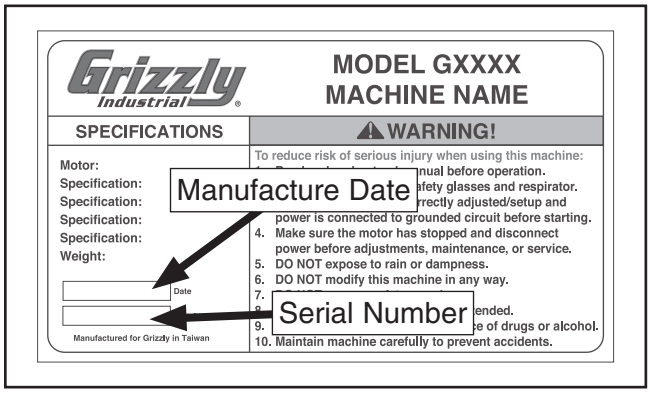

Identification

Become familiar with the names and locations of the controls and features shown below to better understand the instructions in this manual.

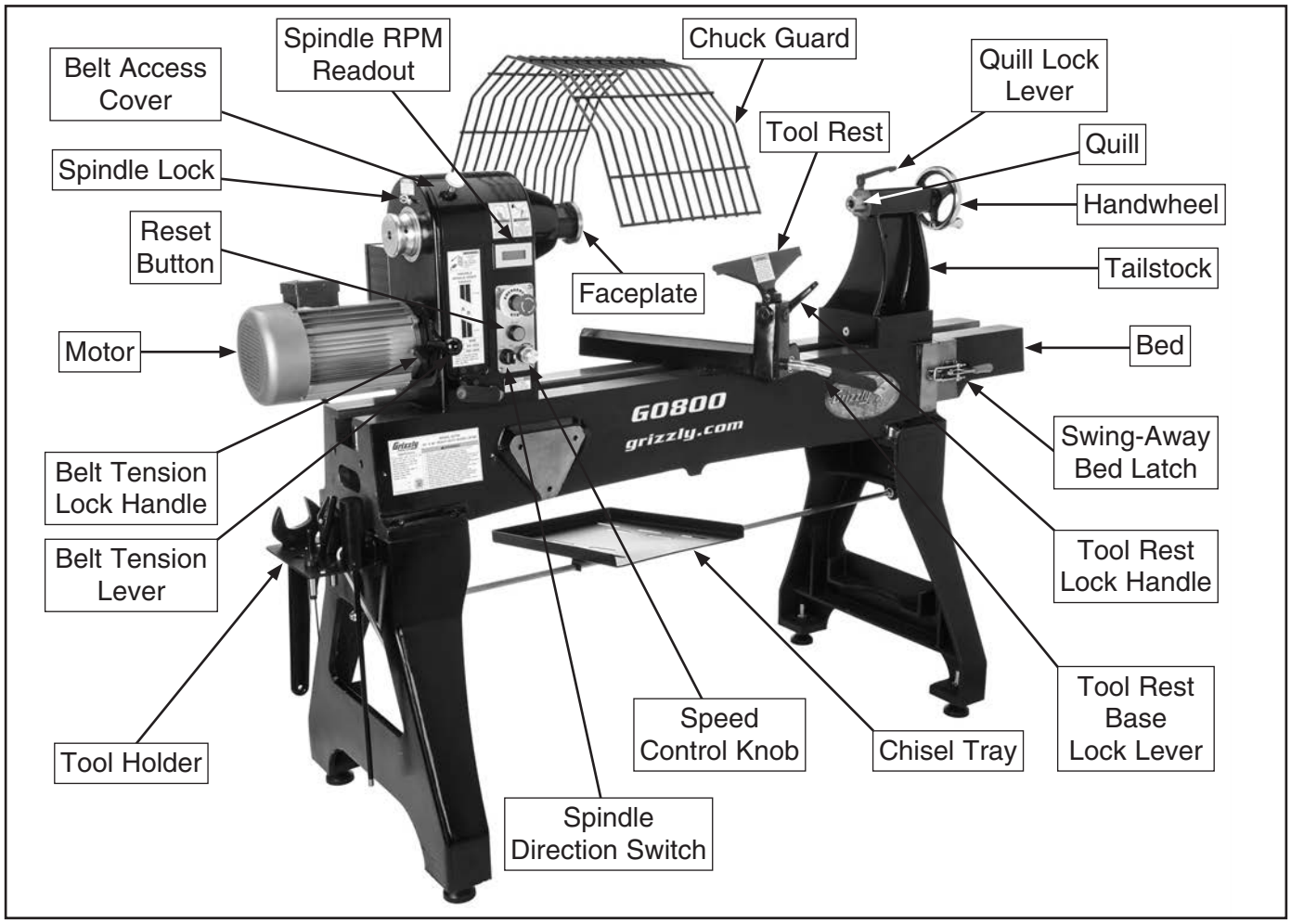

⚠CAUTION

For Your Own Safety Read Instruction Manual Before Operating Lathe

a) Wear eye protection.
b) Do not wear gloves, necktie, or loose clothing.
c) Tighten all locks before operating.
d) Rotate workpiece by hand before applying power.
e) Rough out workpiece before installing on faceplate.
f) Do not mount split workpiece or one containing knot.
g) Use lowest speed when starting new workpiece.

Controls & Components

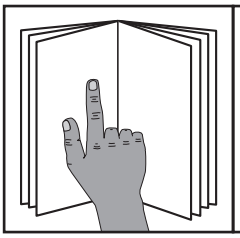

⚠WARNING

To reduce your risk of serious injury, read this entire manual BEFORE using machine.

Refer to **Figures 1–5** and the following descriptions to become familiar with the basic controls of this machine.

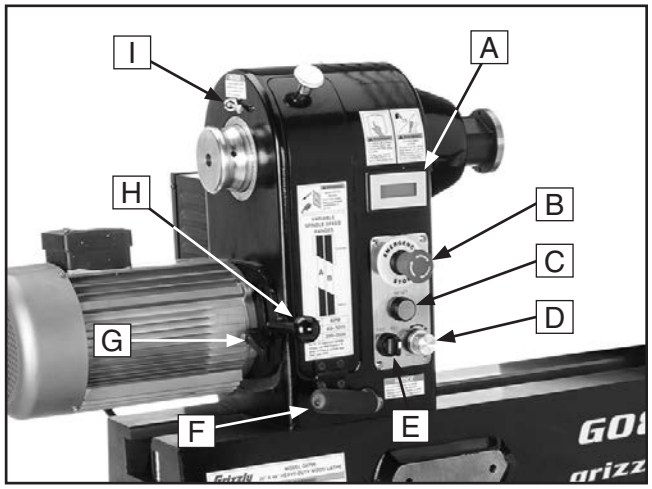

Figure 1. Headstock controls.

A. Spindle RPM Readout: Indicates spindle speed in revolutions per minute (RPM).

B. Emergency Stop Button: Stops spindle rotation. Twist clockwise to reset.

C. Reset Button: Enables spindle rotation after Emergency Stop button has been disengaged or power has been lost.

D. Speed Control Knob: Adjusts spindle speed from low to high within range governed by pulley belt position.

E. Spindle Direction Switch: Toggles spindle direction between forward (FWD) and reverse (REV).

F. Headstock Lock Lever: Secures headstock in position along bed.

G. Belt Tension Lock Handle: Locks belt tension lever in place.

H. Belt Tension Lever: Increases and decreases amount of tension on belt.

I. Spindle Lock: Locks spindle in place for indexing operations.

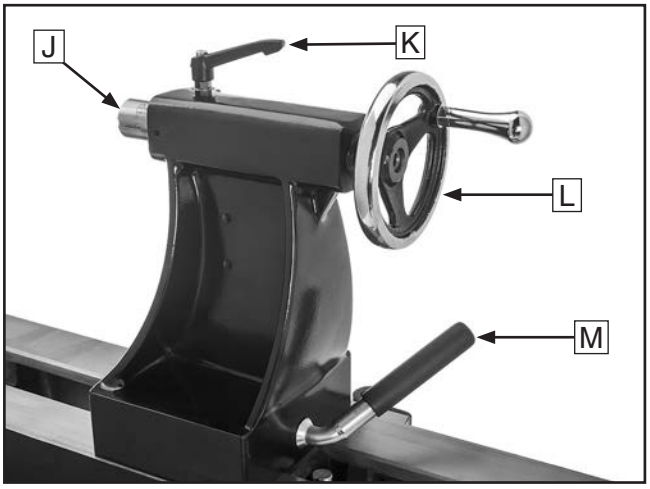

Figure 2. Tailstock controls.

J. Quill: Holds centers or tooling. Can be moved toward and away from spindle.

K. Quill Lock Handle: Secures quill in position.

L. Tailstock Handwheel: Moves quill toward and away from spindle.

M. Tailstock Lock Lever: Secures tailstock in position along bed.

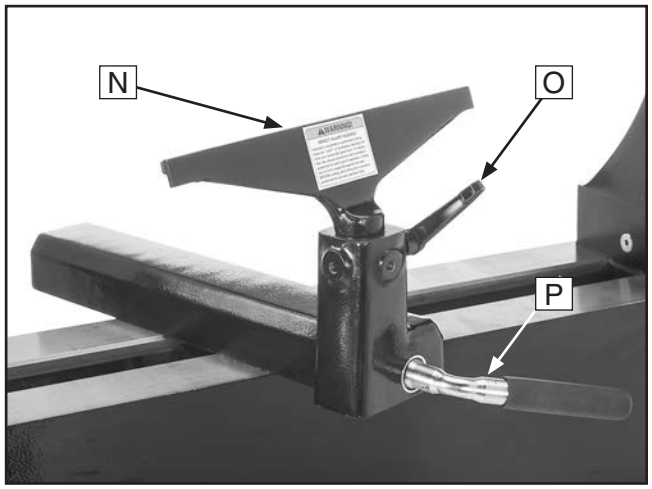

Figure 3. Tool rest controls.

N. Tool Rest: Provides stable platform for cutting tools.

O. Tool Rest Lock Handle: Secures tool rest in position.

P. Tool Rest Base (Banjo) Lock Lever: Secures tool rest base (banjo) in position along bed.

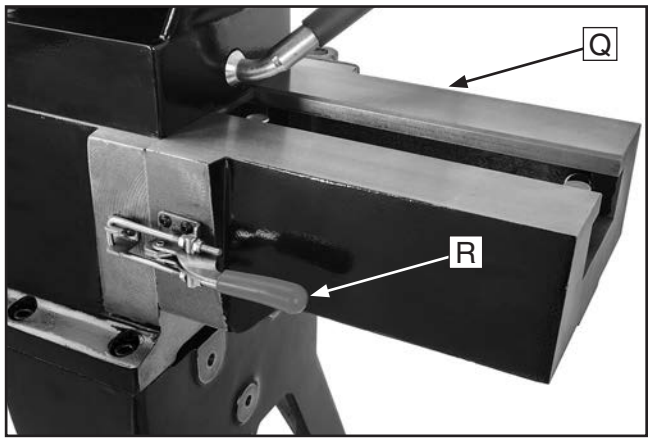

Figure 4. Swing-away bed components.

Q. Swing-Away Bed: Provides extended bed length for turning operations, and swings around side of bed to store tailstock during outboard turning operations.

R. Swing-Away Bed Latch: Locks swing-away bed securely against lathe bedway.

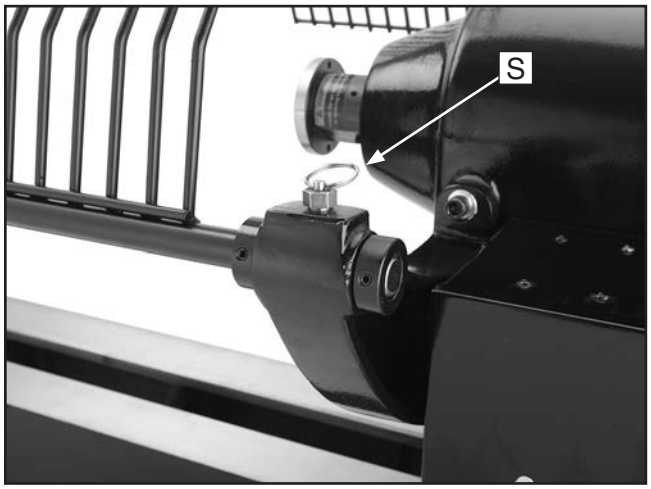

Figure 5. Locking pin used to secure chuck guard.

S. Chuck Guard Locking Pin: Secures chuck guard in position. Pull pin up to release locking mechanism and allow guard to rotate.

Glossary Of Terms

The following is a list of common definitions, terms and phrases used throughout this manual as they relate to this wood lathe and turning in general. Become familiar with these terms for assembling, adjusting or operating this machine. Your safety is **VERY** important to us at Grizzly!

Bed: The long, rail-like metal base to which the tailstock, tool base, and headstock are attached.

Chuck: A mechanical device that attaches to the spindle and holds the workpiece using clamping force from attached jaws.

Faceplate: The metal disc that threads onto the headstock spindle and is used as an alternate means of holding a workpiece, such as a bowl, that can't be mounted between centers.

Faceplate Turning: Turning situation in which the grain of the turning stock is at right angles to the lathe bed axis, or for workpieces that can't be held between centers, such as bowls.

Backing Block: A sacrificial piece of wood glued to the base of the workpiece and screwed to the faceplate. Often used to prevent mounting marks from appearing on the completed workpiece.

Headstock: The cast metal box to which the motor is attached and contains the spindle, bearings, belts, and electrical components for operating the lathe.

Index Head: The mechanism that allows the headstock spindle to be locked at specific intervals for layout or other auxiliary tasks.

Offset Turning: A turning situation where the center of the workpiece is offset at various stages of the work to produce different shapes.

Outboard Turning: Turning of workpiece with the headstock situated at the far end of the lathe so the work done is not over the bed of the lathe.

Roughing Out: Taking stock from square billet to round blank.

Spindle: This term has two meanings. First, it refers to the threaded shaft in the headstock to which the faceplate is attached. Second, it refers to any work that is spindle-turned.

Spindle-Turning: Work performed where the grain and length of the workpiece are parallel to the axis of the bed, or the workpiece is held between the spindle center and tailstock center.

Swing: The capacity of the lathe, measured by doubling the distance from the bed to the spindle center.

Tailstock: The metal component at the opposite end of the bed from the headstock containing a quill and live or dead centers. It maintains pressure on the spindle-turned workpiece.

Tool Rest Base (a.k.a. Banjo): The movable metal fixture attached to the bed upon which the tool rest is fixed.

Tool Rest: The adjustable metal arm upon which the tool rests during a turning operation.

Way: One of the metal rails that make up the bed of the lathe.

MACHINE DATA SHEET

Customer Service #: (570) 546-9663 · To Order Call: (800) 523-4777 · Fax #: (800) 438-5901

MODEL G0799 20" X 48" HEAVY-DUTY WOOD LATHE

Product Dimensions:

Weight	749 lbs.
Width (side-to-side) x Depth (front-to-back) x Height	26 x 89 x 54 in.
Footprint (Length x Width)	55-1/2 x 26 in.

Shipping Dimensions:

Type	Cardboard w/Wood Skids
Content	Machine
Weight	826 lbs.
Length x Width x Height	58 x 31 x 30 in.
Must Ship Upright	Yes

Electrical:

Power Requirement	220V, Single-Phase, 60 Hz
Prewired Voltage	220V
Full-Load Current Rating	13.6A
Minimum Circuit Size	15A
Connection Type	Cord & Plug
Power Cord Included	Yes
Power Cord Length	6 ft.
Power Cord Gauge	14 AWG
Plug Included	Yes
Included Plug Type	6-15
Switch Type	Push Button
Inverter (VFD) Type	Delta VFD015EL21A
Inverter (VFD) Size	2 HP

Motors:

Main

Horsepower	2 HP
Phase	3-Phase
Amps	6.5A
Speed	1720 RPM
Type	TEFC Induction
Power Transfer	Belt Drive
Bearings	Shielded & Permanently Lubricated

Main Specifications:

Operation Information

Swing Over Bed	20 in.
Swing Over Tool Rest Base	16 in.
Distance Between Centers	48 in.
Max. Distance Tool Rest to Spindle Center	15 in.
No of Spindle Speeds	Variable
Spindle Speed Range	60 – 3500 RPM
Floor to Center Height	44 in.
Headstock Rotation	Fixed

Spindle Information

Spindle Taper	MT#2
Spindle Thread Size	1-1/4 in. x 8 TPI
Spindle Thread Direction	Right-Hand
Spindle Bore	0.625 in.
Type of Included Spindle Center	Spur
Indexed Spindle Increments	7-1/2 deg.
No of Indexes	48
Outboard Spindle Thread Direction	Right-Hand
Outboard Spindle Size	1-1/4 in.
Outboard Spindle TPI	8 TPI

Tool Rest Information

Tool Rest Width	14-1/4 in.
Tool Rest Post Diameter	1 in.
Tool Rest Post Length	5-5/16 in.
Tool Rest Base Height	2-5/16 in.

Tailstock Information

Tailstock Taper	MT#2
Type of Included Tailstock Center	Live Center

Construction

Bed	Cast Iron
Frame	Cast Iron
Stand	Cast Iron
Base	Cast Iron
Headstock	Cast Iron
Tailstock	Cast Iron
Paint Type/Finish	Enamel

Other Related Information

Bed Width	8-5/16 in.
Faceplate Size	3-1/4 in.

Other Specifications:

Country of Origin	China
Warranty	1 Year
Approximate Assembly & Setup Time	1 Hour
Serial Number Location	ID Label
ISO 9001 Factory	Yes
Certified by a Nationally Recognized Testing Laboratory (NRTL)	Yes

Features:

Electronic Variable-Speed Spindle Control with Digital RPM Readout
Forward/Reverse Switch
15" Maximum Distance from Tool Rest to Spindle Centerline
Low Spindle Speed Range of 60–1000 RPM and a High-Speed Range of 200–3500 RPM
Headstock Can Be Positioned Anywhere Along Bed
12" Swing-Away Bed for Easy Tailstock Storage
7-1/2° Spindle Indexing
4-1/2" Tailstock Quill Travel
Built-In Tool Holder
Headstock, Tailstock, and Tool Rest Support Have Lever-Action Cam-Locks for Quick Positioning
Adjustable Leveling Feet

MACHINE DATA SHEET

Customer Service #: (570) 546-9663 · To Order Call: (800) 523-4777 · Fax #: (800) 438-5901

MODEL G0800 24" X 48" HEAVY-DUTY WOOD LATHE

Product Dimensions:

Weight	767 lbs.
Width (side-to-side) x Depth (front-to-back) x Height	26 x 90 x 57-1/2 in.
Footprint (Length x Width)	55-1/2 x 26 in.

Shipping Dimensions:

Type	Cardboard Box on Wood Skids
Content	Machine
Weight	845 lbs.
Length x Width x Height	58 x 31 x 30 in.
Must Ship Upright	Yes

Electrical:

Power Requirement	220V, Single-Phase, 60 Hz
Full-Load Current Rating	19.8A
Minimum Circuit Size	20A
Connection Type	Cord & Plug
Power Cord Included	Yes
Power Cord Length	6 ft.
Power Cord Gauge	14 AWG
Plug Included	Yes
Included Plug Type	6-20
Switch Type	Push Button
Inverter (VFD) Type	Delta VFD022EL21A
Inverter (VFD) Size	3 HP

Motors:

Main

Horsepower	3 HP
Phase	3-Phase
Amps	10A
Speed	1720 RPM
Type	TEFC Induction
Power Transfer	Belt Drive
Bearings	Shielded & Permanently Lubricated

Main Specifications:

Operation Information

Swing Over Bed	24 in.
Swing Over Tool Rest Base	20 in.
Distance Between Centers	48 in.
Max. Distance Tool Rest to Spindle Center	15 in.
No of Spindle Speeds	Variable
Spindle Speed Range	60 – 3500 RPM
Floor to Center Height	46 in.
Headstock Rotation	Fixed

Spindle Information

Spindle Taper	MT#2
Spindle Thread Size	1-1/4 in. x 8 TPI
Spindle Thread Direction	Right-Hand
Spindle Bore	0.625 in.
Type of Included Spindle Center	Spur
Indexed Spindle Increments	7-1/2 deg.
No of Indexes	48
Outboard Spindle Thread Direction	Right
Outboard Spindle Size	1-1/4 in.
Outboard Spindle TPI	8 TPI

Tool Rest Information

Tool Rest Width	14-1/4 in.
Tool Rest Post Diameter	1 in.
Tool Rest Post Length	5-5/16 in.
Tool Rest Base Height	2-5/16 in.

Tailstock Information

Tailstock Taper	MT#2
Type of Included Tailstock Center	Live

Construction

Bed	Cast Iron
Frame	Cast Iron
Stand	Cast Iron
Base	Cast Iron
Headstock	Cast Iron
Tailstock	Cast Iron
Paint Type/Finish	Enamel

Other Related Information

Bed Width	8-5/16 in.
Faceplate Size	3-1/4 in.

Other Specifications:

Country of Origin	China
Warranty	1 Year
Approximate Assembly & Setup Time	1 Hour
Serial Number Location	ID Label
ISO 9001 Factory	Yes
Certified by a Nationally Recognized Testing Laboratory (NRTL)	Yes

Features:

Electronic Variable-Speed Spindle Control with Digital RPM Readout
Forward/Reverse Switch
15" Maximum Distance from Tool Rest to Spindle Centerline
12" Swing-Away Bed for Easy Tailstock Storage
Low Spindle Speed Range of 60 to 1000 RPM and a High-Speed Range of 200-3500 RPM
Headstock Can Be Positioned Anywhere Along the Bed
7-1/2º Spindle Indexing
Tailstock, Headstock, and Tool Rest Support Have Lever-Action Cam-Locks for Quick Positioning
Adjustable Leveling Feet
4-1/2" Tailstock Quill Travel
Built-In Tool Holder

SECTION 1: SAFETY

For Your Own Safety, Read Instruction Manual Before Operating This Machine

The purpose of safety symbols is to attract your attention to possible hazardous conditions. This manual uses a series of symbols and signal words intended to convey the level of importance of the safety messages. The progression of symbols is described below. Remember that safety messages by themselves do not eliminate danger and are not a substitute for proper accident prevention measures. Always use common sense and good judgment.

⚠DANGER **Indicates an imminently hazardous situation which, if not avoided, WILL result in death or serious injury.**

⚠WARNING **Indicates a potentially hazardous situation which, if not avoided, COULD result in death or serious injury.**

⚠CAUTION **Indicates a potentially hazardous situation which, if not avoided, MAY result in minor or moderate injury. It may also be used to alert against unsafe practices.**

NOTICE **This symbol is used to alert the user to useful information about proper operation of the machine.**

Safety Instructions for Machinery

⚠WARNING

OWNER'S MANUAL. Read and understand this owner's manual BEFORE using machine.

TRAINED OPERATORS ONLY. Untrained operators have a higher risk of being hurt or killed. Only allow trained/supervised people to use this machine. When machine is not being used, disconnect power, remove switch keys, or lock-out machine to prevent unauthorized use—especially around children. Make your workshop kid proof!

DANGEROUS ENVIRONMENTS. Do not use machinery in areas that are wet, cluttered, or have poor lighting. Operating machinery in these areas greatly increases the risk of accidents and injury.

MENTAL ALERTNESS REQUIRED. Full mental alertness is required for safe operation of machinery. Never operate under the influence of drugs or alcohol, when tired, or when distracted.

ELECTRICAL EQUIPMENT INJURY RISKS. You can be shocked, burned, or killed by touching live electrical components or improperly grounded machinery. To reduce this risk, only allow qualified service personnel to do electrical installation or repair work, and always disconnect power before accessing or exposing electrical equipment.

DISCONNECT POWER FIRST. Always disconnect machine from power supply BEFORE making adjustments, changing tooling, or servicing machine. This prevents an injury risk from unintended startup or contact with live electrical components.

EYE PROTECTION. Always wear ANSI-approved safety glasses or a face shield when operating or observing machinery to reduce the risk of eye injury or blindness from flying particles. Everyday eyeglasses are NOT approved safety glasses.

⚠WARNING

WEARING PROPER APPAREL. Do not wear clothing, apparel or jewelry that can become entangled in moving parts. Always tie back or cover long hair. Wear non-slip footwear to reduce risk of slipping and losing control or accidentally contacting cutting tool or moving parts.

HAZARDOUS DUST. Dust created by machinery operations may cause cancer, birth defects, or long-term respiratory damage. Be aware of dust hazards associated with each workpiece material. Always wear a NIOSH-approved respirator to reduce your risk.

HEARING PROTECTION. Always wear hearing protection when operating or observing loud machinery. Extended exposure to this noise without hearing protection can cause permanent hearing loss.

REMOVE ADJUSTING TOOLS. Tools left on machinery can become dangerous projectiles upon startup. Never leave chuck keys, wrenches, or any other tools on machine. Always verify removal before starting!

USE CORRECT TOOL FOR THE JOB. Only use this tool for its intended purpose—do not force it or an attachment to do a job for which it was not designed. Never make unapproved modifications—modifying tool or using it differently than intended may result in malfunction or mechanical failure that can lead to personal injury or death!

AWKWARD POSITIONS. Keep proper footing and balance at all times when operating machine. Do not overreach! Avoid awkward hand positions that make workpiece control difficult or increase the risk of accidental injury.

CHILDREN & BYSTANDERS. Keep children and bystanders at a safe distance from the work area. Stop using machine if they become a distraction.

GUARDS & COVERS. Guards and covers reduce accidental contact with moving parts or flying debris. Make sure they are properly installed, undamaged, and working correctly BEFORE operating machine.

FORCING MACHINERY. Do not force machine. It will do the job safer and better at the rate for which it was designed.

NEVER STAND ON MACHINE. Serious injury may occur if machine is tipped or if the cutting tool is unintentionally contacted.

STABLE MACHINE. Unexpected movement during operation greatly increases risk of injury or loss of control. Before starting, verify machine is stable and mobile base (if used) is locked.

USE RECOMMENDED ACCESSORIES. Consult this owner's manual or the manufacturer for recommended accessories. Using improper accessories will increase the risk of serious injury.

UNATTENDED OPERATION. To reduce the risk of accidental injury, turn machine ***OFF*** and ensure all moving parts completely stop before walking away. Never leave machine running while unattended.

MAINTAIN WITH CARE. Follow all maintenance instructions and lubrication schedules to keep machine in good working condition. A machine that is improperly maintained could malfunction, leading to serious personal injury or death.

DAMAGED PARTS. Regularly inspect machine for damaged, loose, or mis-adjusted parts—or any condition that could affect safe operation. Immediately repair/replace BEFORE operating machine. For your own safety, DO NOT operate machine with damaged parts!

MAINTAIN POWER CORDS. When disconnecting cord-connected machines from power, grab and pull the plug—NOT the cord. Pulling the cord may damage the wires inside. Do not handle cord/plug with wet hands. Avoid cord damage by keeping it away from heated surfaces, high traffic areas, harsh chemicals, and wet/damp locations.

EXPERIENCING DIFFICULTIES. If at any time you experience difficulties performing the intended operation, stop using the machine! Contact our Technical Support at (570) 546-9663.

Additional Safety for Wood Lathes

⚠WARNING

Serious injury or death can occur from getting entangled in, crushed between, or struck by rotating parts on a lathe! Rotating workpieces can come loose and strike operator or bystanders with deadly force if they are improperly secured, rotated too fast, or are not strong enough for the rotational forces required for turning. Improper tool setup or usage can cause tool kickback or grabbing, resulting in impact injury or entanglement. To reduce the risk of operator (or bystander) injury or death, anyone operating this machine MUST completely heed the hazards and warnings below.

CHECK WORKPIECE INTEGRITY. Verify each workpiece is free of knots, splits, nails, or foreign material to ensure it can safely rotate on spindle without breaking apart or causing tool kickback.

PROPERLY PREPARE WORKPIECE. Before mounting, cut off waste portions to balance workpiece for safe rotation and remove large edges that can catch on tooling.

SECURE LOCKS. Verify tool rest, headstock, and tailstock are secure before turning lathe ***ON***.

SECURE WORKPIECE. Use proven setup techniques and always verify workpiece is well-secured before starting lathe. Only use high-quality fasteners with non-tapered heads for faceplate attachment.

ADJUST TOOL SUPPORT. An improperly supported tool may be grabbed or ejected. Adjust tool rest approximately ¼" away from workpiece and ⅛" above workpiece center line to provide proper support for turning tool. Firmly hold turning tool with both hands against tool rest.

TEST NEW SETUPS. Test each new setup by starting spindle rotation at lowest speed and standing to side of lathe until workpiece reaches full speed and you can verify safe rotation.

REMOVE ADJUSTMENT TOOLS. Remove all chuck keys, wrenches, and adjustment tools before turning lathe ***ON***. These items can become deadly projectiles when spindle is started.

CHECK CLEARANCES. Before starting spindle, verify workpiece has adequate clearance by hand-rotating it through its entire range of motion.

WEAR PROPER PPE. Always wear a face shield and safety glasses when operating lathe. Do not wear gloves, necktie or loose clothing. Keep long hair away from rotating spindle.

USE CORRECT SPEEDS. Select correct spindle speed for workpiece size, type, shape, and condition. Use low speeds when roughing or when turning large, long, or non-concentric workpieces. Allow spindle to reach full speed before turning.

AVOID TOOL KICKBACK. This occurs when turning tool is grabbed or ejected from workpiece with great force. Commonly caused by poor workpiece selection/preparation, improper tool usage, or improper machine setup or tool rest adjustment.

SAFELY PERFORM ROUGHING. Use correct tool. Take light cuts, use low speeds, and firmly support tool with both hands.

USE SHARP TOOLS. Sharp tools cut with less resistance than dull tools. Using dull tools increases the risk of tool kickback or grabbing.

SAFELY STOPPING ROTATION. Always allow rotating workpiece to stop on its own. Never put hands or another object on workpiece to stop it.

SAFELY MEASURE WORKPIECE. Only measure workpiece after it has stopped. Trying to measure a spinning workpiece increases entanglement risk.

SANDING/POLISHING. To reduce entanglement risk, remove tool rest before sanding. Never completely wrap sandpaper around workpiece.

SECTION 2: POWER SUPPLY

Availability

Before installing the machine, consider the availability and proximity of the required power supply circuit. If an existing circuit does not meet the requirements for this machine, a new circuit must be installed. To minimize the risk of electrocution, fire, or equipment damage, installation work and electrical wiring must be done by an electrician or qualified service personnel in accordance with all applicable codes and standards.

⚠WARNING

Electrocution, fire, shock, or equipment damage may occur if machine is not properly grounded and connected to power supply.

Full-Load Current Rating

The full-load current rating is the amperage a machine draws at 100% of the rated output power. On machines with multiple motors, this is the amperage drawn by the largest motor or sum of all motors and electrical devices that might operate at one time during normal operations.

G0799 Full-Load Current Rating.... 13.6 Amps
G0800 Full-Load Current Rating.... 19.8 Amps

The full-load current is not the maximum amount of amps that the machine will draw. If the machine is overloaded, it will draw additional amps beyond the full-load rating.

If the machine is overloaded for a sufficient length of time, damage, overheating, or fire may result—especially if connected to an undersized circuit. To reduce the risk of these hazards, avoid overloading the machine during operation and make sure it is connected to a power supply circuit that meets the specified circuit requirements.

Circuit Information

A power supply circuit includes all electrical equipment between the breaker box or fuse panel in the building and the machine. The power supply circuit used for this machine must be sized to safely handle the full-load current drawn from the machine for an extended period of time. (If this machine is connected to a circuit protected by fuses, use a time delay fuse marked D.)

Note: *Circuit requirements in this manual apply to a dedicated circuit—where only one machine will be running on the circuit at a time. If machine will be connected to a shared circuit where multiple machines may be running at the same time, consult an electrician or qualified service personnel to ensure circuit is properly sized for safe operation.*

⚠CAUTION

For your own safety and protection of property, consult an electrician if you are unsure about wiring practices or electrical codes in your area.

This machine is prewired to operate on a power supply circuit that has a verified ground and meets the following requirements:

G0799 Circuit Requirements

Nominal Voltage 208V, 220V, 230V, 240V
Cycle ..... 60 Hz
Phase ..... Single-Phase
Power Supply Circuit ..... 15 Amps
Plug/Receptacle ..... NEMA 6-15

G0800 Circuit Requirements

Nominal Voltage 208V, 220V, 230V, 240V
Cycle ..... 60 Hz
Phase ..... Single-Phase
Power Supply Circuit ..... 20 Amps
Plug/Receptacle ..... NEMA 6-20

⚠WARNING

Serious injury could occur if you connect machine to power before completing setup process. DO NOT connect to power until instructed later in this manual.

Grounding Requirements

This machine MUST be grounded. In the event of certain malfunctions or breakdowns, grounding reduces the risk of electric shock by providing a path of least resistance for electric current.

This machine is equipped with a power cord that has an equipment-grounding wire and a grounding plug. Only insert plug into a matching receptacle (outlet) that is properly installed and grounded in accordance with all local codes and ordinances. DO NOT modify the provided plug!

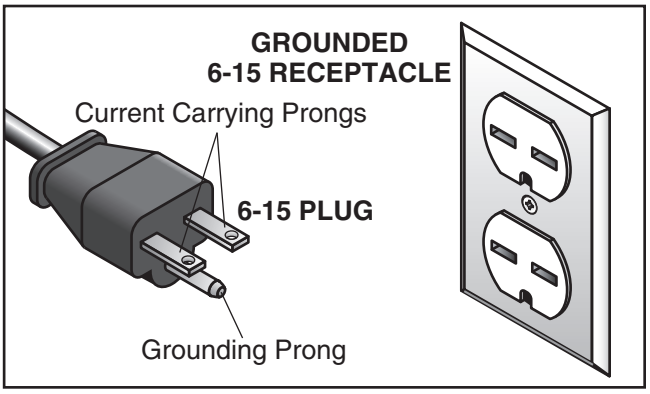

Figure 6. Typical 6-15 plug and receptacle.

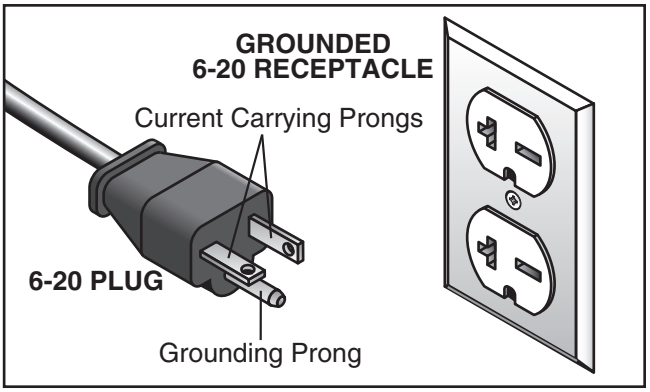

Figure 7. Typical 6-20 plug and receptacle.

⚠CAUTION

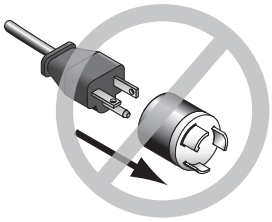

No adapter should be used with plug. If plug does not fit available receptacle, or if machine must be reconnected for use on a different type of circuit, reconnection must be performed by an electrician or qualified service personnel, and it must comply with all local codes and ordinances.

Improper connection of the equipment-grounding wire can result in a risk of electric shock. The wire with green insulation (with or without yellow stripes) is the equipment-grounding wire. If repair or replacement of the power cord or plug is necessary, do not connect the equipment-grounding wire to a live (current carrying) terminal.

Check with a qualified electrician or service personnel if you do not understand these grounding requirements, or if you are in doubt about whether the tool is properly grounded. If you ever notice that a cord or plug is damaged or worn, disconnect it from power, and immediately replace it with a new one.

Extension Cords

We do not recommend using an extension cord with this machine. If you must use an extension cord, only use it if absolutely necessary and only on a temporary basis.

Extension cords cause voltage drop, which can damage electrical components and shorten motor life. Voltage drop increases as the extension cord size gets longer and the gauge size gets smaller (higher gauge numbers indicate smaller sizes).

Any extension cord used with this machine must be in good condition and contain a ground wire and matching plug/receptacle. Additionally, it must meet the following size requirements:

G0799 Minimum Gauge Size.....12 AWG
G0800 Minimum Gauge Size.....12 AWG
Maximum Length (Shorter is Better).....50 ft.

SECTION 3: SETUP

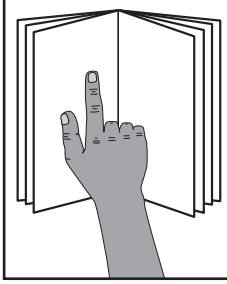

⚠WARNING

This machine presents serious injury hazards to untrained users. Read through this entire manual to become familiar with the controls and operations before starting the machine!

⚠WARNING

Wear safety glasses during the entire setup process!

⚠WARNING

HEAVY LIFT!

Straining or crushing injury may occur from improperly lifting machine or some of its parts. To reduce this risk, get help from other people and use a forklift (or other lifting equipment) rated for weight of this machine.

Needed for Setup

The following are needed to complete the setup process, but are not included with your machine.

- **For Lifting and Moving:**
  - — A forklift or other power lifting device rated for at least 1000 lbs.
  - — Two lifting straps rated for at least 1000 lbs. each
  - — Two other people to guide machine

- **For Assembly:**
  - — Shop rags
  - — Cleaner/degreaser (see **Page 20**)
  - — Quality metal protectant lubricant
  - — Safety glasses for each person
  - — Anchoring hardware as needed (see **Page 27**)
  - — Precision level at least 12" long

Unpacking

This machine was carefully packaged for safe transport. When unpacking, separate all enclosed items from packaging materials and inspect them for shipping damage. ***If items are damaged, please call us immediately at (570) 546-9663.***

IMPORTANT: Save all packaging materials until you are completely satisfied with the machine and have resolved any issues between Grizzly or the shipping agent. *You MUST have the original packaging to file a freight claim. It is also extremely helpful if you need to return your machine later.*

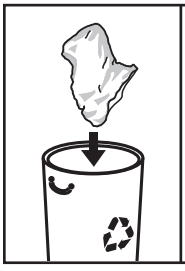

⚠WARNING

SUFFOCATION HAZARD!

Keep children and pets away from plastic bags or packing materials shipped with this machine. Discard immediately.

Hardware Recognition Chart

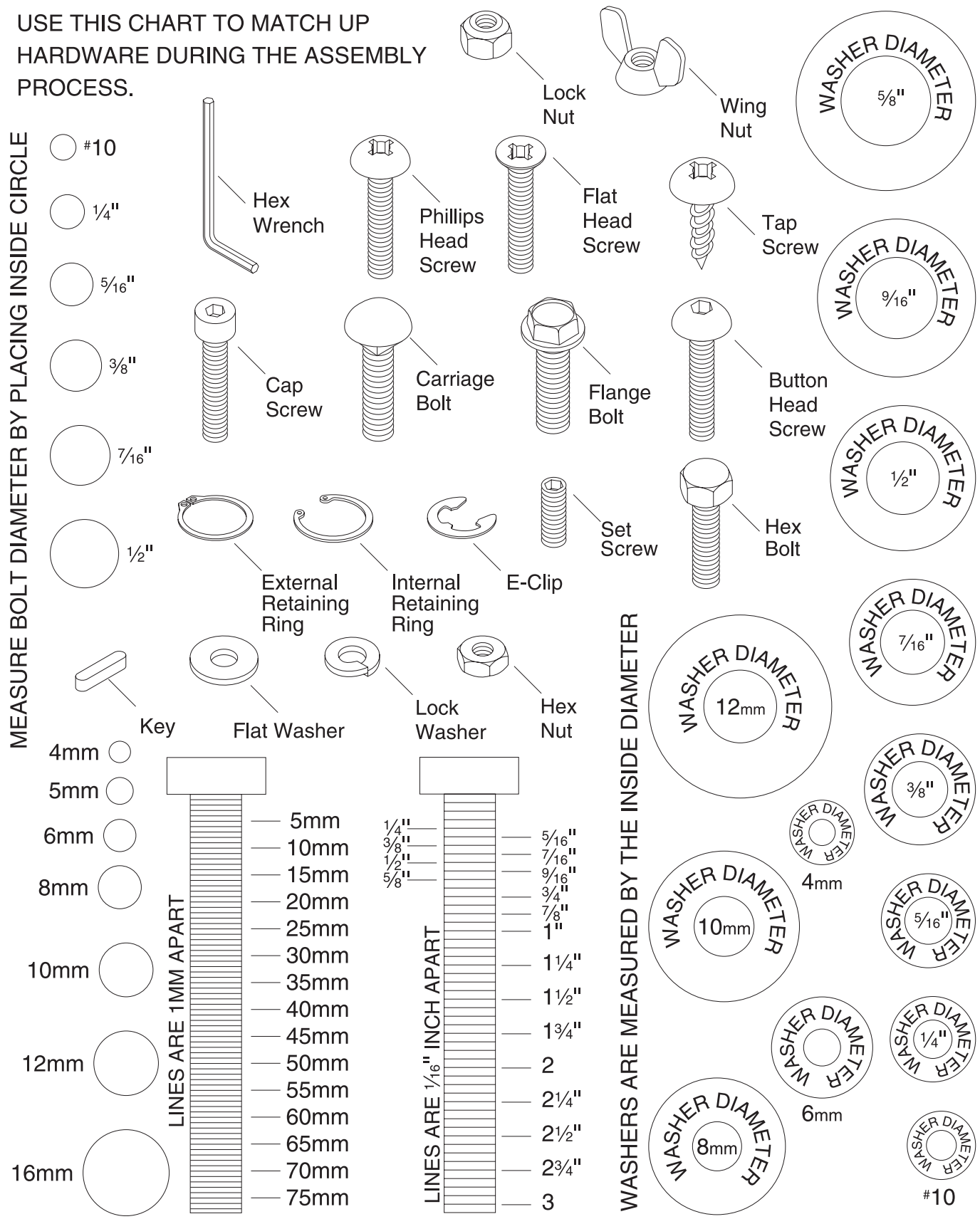

Inventory

The following is a list of items shipped with your machine. Before beginning setup, lay these items out and inventory them.

If any non-proprietary parts are missing (e.g. a nut or a washer), we will gladly replace them; or for the sake of expediency, replacements can be obtained at your local hardware store.

After all the parts have been removed from the shipping containers, you should have the following items:

Inventory (Figures 8–11): **Qty**

A. Lathe Assembly
- —Headstock (mounted) 1
- —Tool Rest (mounted)..... 1
- —Tool Rest Base (mounted) 1
- —Tailstock (mounted)..... 1

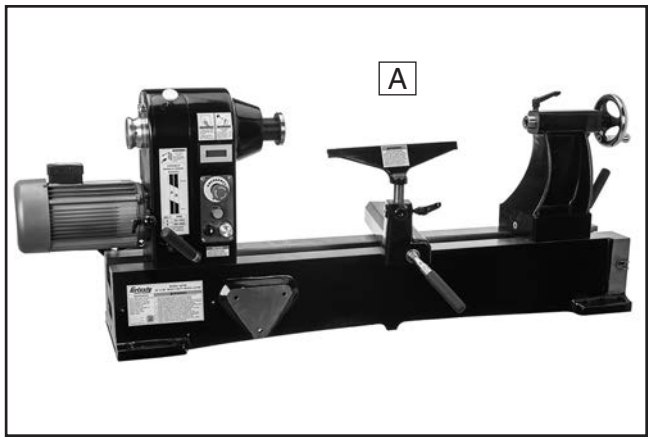

Figure 8. Lathe assembly.

B. Stand Legs 2
C. Open-End Wrench 50mm 1
D. Faceplate 3" 1
- —Set Screws M6-1 x 10..... 2

E. Hex Wrenches 3, 10mm.....1 Ea
F. Machine Feet w/Hex Nuts 4
G. Tool Rack 1
H. Spur Center 1
I. Knockout Rod 1
J. Locating Rod 1
K. Live Center 1

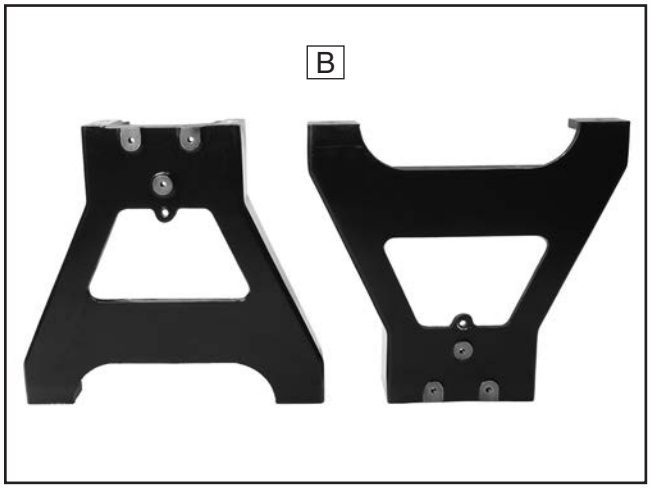

Figure 9. Stand legs.

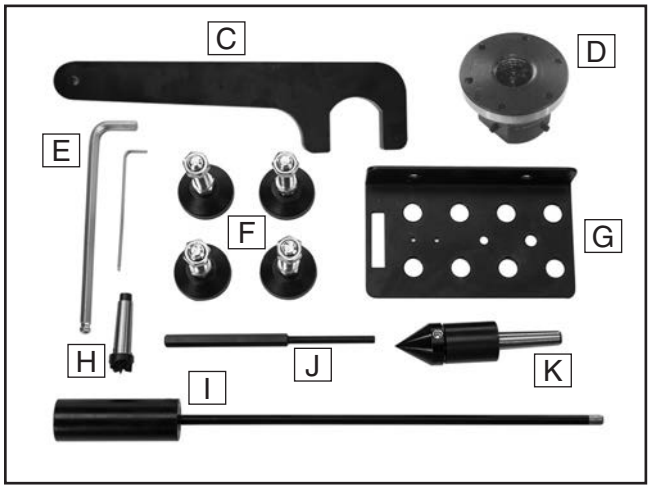

Figure 10. Loose inventory components.

L. Chuck Guard 1
M. Chuck Guard Mounting Arm..... 1
N. Swing-Away Bed Extension 1
O. Chisel Pan 1
P. Chisel Pan Mounting Rod 1
—Lock Nuts M12-1.75 2
—Hex Nuts M12-1.75..... 2
—Flat Washers 12mm..... 4

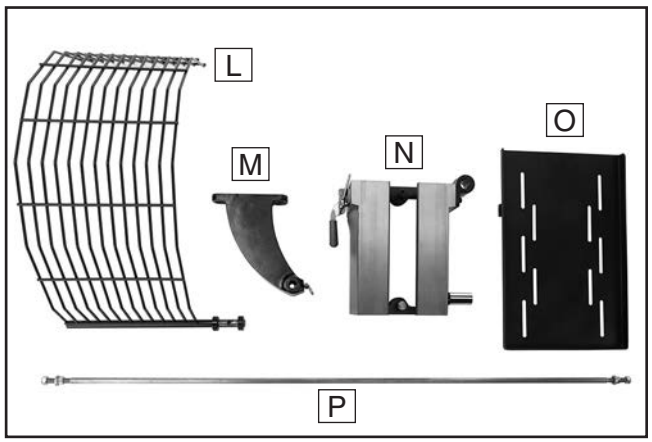

Figure 11. Accessory components.

Q. Hardware (see **Hardware Recognition Chart**)
—Cap Screws M12-1.75 x 20 2
—Cap Screws M12-1.75 x 35 8
—Cap Screws M10-1.5 x 30..... 2
—Flat Washers 12mm..... 2
—Flat Washers 10mm..... 2
—Lock Washers 12mm 2
—Lock Washers 10mm 2

NOTICE

If you cannot find an item on this list, carefully check around/inside the machine and packaging materials. Often, these items get lost in packaging materials while unpacking or they are pre-installed at the factory.

Cleanup

The unpainted surfaces of your machine are coated with a heavy-duty rust preventative that prevents corrosion during shipment and storage. This rust preventative works extremely well, but it will take a little time to clean.

Be patient and do a thorough job cleaning your machine. The time you spend doing this now will give you a better appreciation for the proper care of your machine's unpainted surfaces.

There are many ways to remove this rust preventative, but the following steps work well in a wide variety of situations. Always follow the manufacturer's instructions with any cleaning product you use and make sure you work in a well-ventilated area to minimize exposure to toxic fumes.

Before cleaning, gather the following:
- Disposable rags
- Cleaner/degreaser (WD•40 works well)
- Safety glasses & disposable gloves
- Plastic paint scraper (optional)

Basic steps for removing rust preventative:

1. Put on safety glasses.

2. Coat the rust preventative with a liberal amount of cleaner/degreaser, then let it soak for 5–10 minutes.

3. Wipe off the surfaces. If your cleaner/degreaser is effective, the rust preventative will wipe off easily. If you have a plastic paint scraper, scrape off as much as you can first, then wipe off the rest with the rag.

4. Repeat **Steps 2–3** as necessary until clean, then coat all unpainted surfaces with a quality metal protectant to prevent rust.

⚠WARNING

Gasoline and petroleum products have low flash points and can explode or cause fire if used to clean machinery. Avoid using these products to clean machinery.

⚠CAUTION

Many cleaning solvents are toxic if inhaled. Only work in a well-ventilated area.

NOTICE

Avoid chlorine-based solvents, such as acetone or brake parts cleaner, that may damage painted surfaces.

T23692—Orange Power Degreaser
A great product for removing the waxy shipping grease from your machine during clean up.

Figure 12. T23692 Orange Power Degreaser.

Site Considerations

Weight Load

Refer to the **Machine Data Sheet** for the weight of your machine. Make sure that the surface upon which the machine is placed will bear the weight of the machine, additional equipment that may be installed on the machine, and the heaviest workpiece that will be used. Additionally, consider the weight of the operator and any dynamic loading that may occur when operating the machine.

Space Allocation

Consider the largest size of workpiece that will be processed through this machine and provide enough space around the machine for adequate operator material handling or the installation of auxiliary equipment. With permanent installations, leave enough space around the machine to open or remove doors/covers as required by the maintenance and service described in this manual. **See below for required space allocation.**

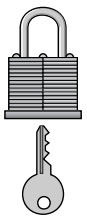

⚠CAUTION

Children or untrained people may be seriously injured by this machine. Only install in an access restricted location.

Physical Environment

The physical environment where the machine is operated is important for safe operation and longevity of machine components. For best results, operate this machine in a dry environment that is free from excessive moisture, hazardous chemicals, airborne abrasives, or extreme conditions. Extreme conditions for this type of machinery are generally those where the ambient temperature range exceeds 41°–104°F; the relative humidity range exceeds 20%–95% (non-condensing); or the environment is subject to vibration, shocks, or bumps.

Electrical Installation

Place this machine near an existing power source. Make sure all power cords are protected from traffic, material handling, moisture, chemicals, or other hazards. Make sure to leave enough space around machine to disconnect power supply or apply a lockout/tagout device, if required.

Lighting

Lighting around the machine must be adequate enough that operations can be performed safely. Shadows, glare, or strobe effects that may distract or impede the operator must be eliminated.

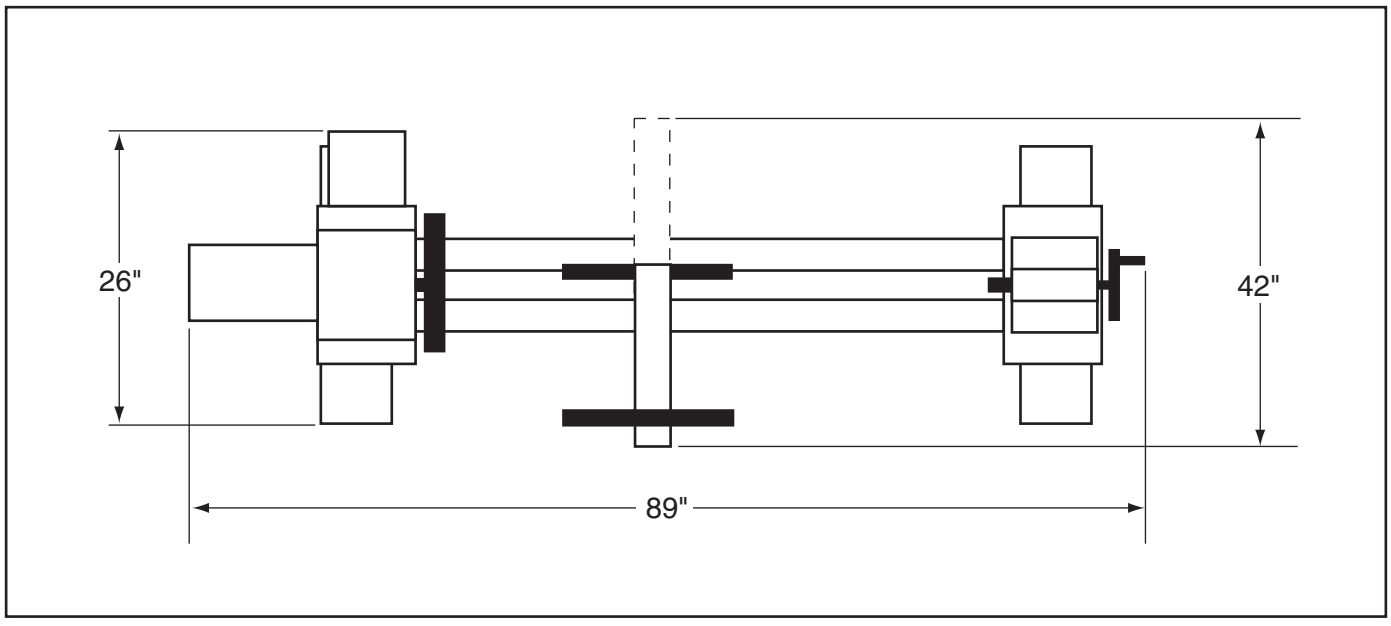

Figure 13. Minimum working clearances.

Assembly

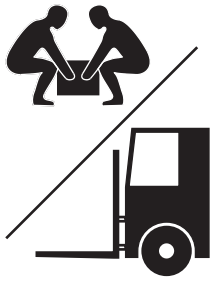

⚠WARNING

HEAVY LIFT!

Straining or crushing injury may occur from improperly lifting machine or some of its parts. To reduce this risk, get help from other people and use a forklift (or other lifting equipment) rated for weight of this machine.

The machine must be fully assembled before it can be operated. Before beginning the assembly process, refer to **Needed for Setup** and gather all listed items. To ensure the assembly process goes smoothly, first clean any parts that are covered or coated in heavy-duty rust preventative (if applicable).

Assembling the G0799 & G0800 lathes consists of attaching the legs to the lathe bed, and then attaching the chuck guard, tool rack, chisel pan, and swing-away bed.

To assemble lathe:

1. Position stand legs upright approximately 48¼" apart, and align them reasonably well (see **Figure 14**).

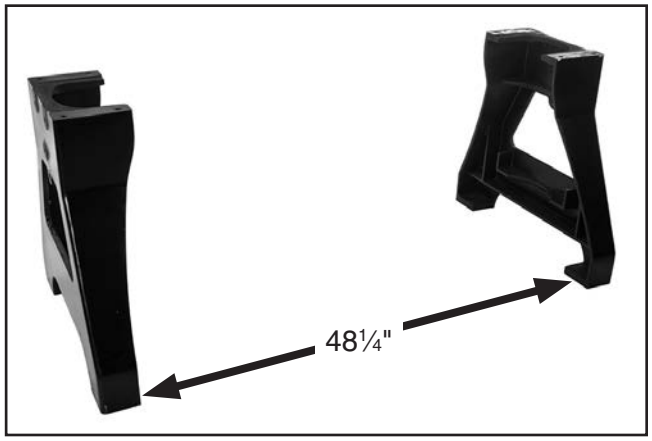

Figure 14. Stand legs aligned and correctly positioned 48¼" apart.

2. Insert chisel pan mounting rod into two brackets underneath chisel pan (see **Figure 15**).

3. Install (1) M12-1.75 hex nut and (1) 12mm flat washer on each end of mounting rod, then insert into designated hole on each leg (see **Figures 15–16**) and loosely secure with (2) M12-1.75 lock nuts and 12mm flat washers.

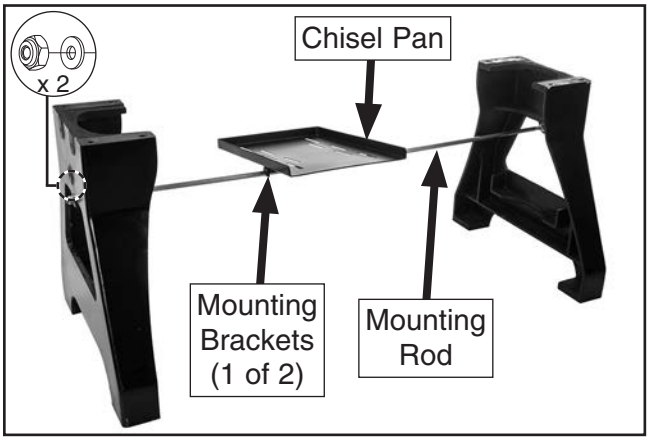

Figure 15. Chisel pan components installed on stand.

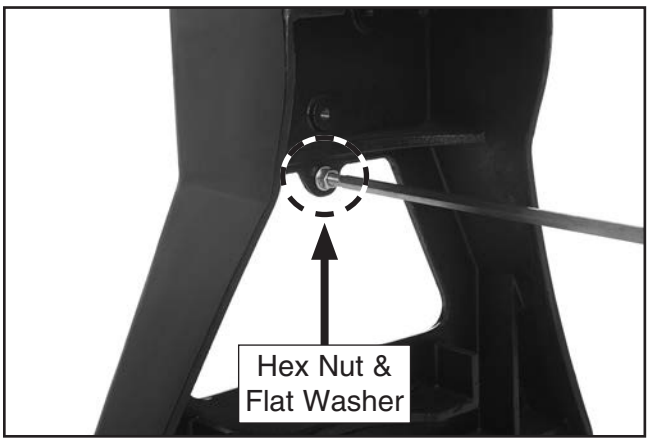

Figure 16. Chisel pan hex nut and flat washer installed.

Note: *The lock nuts on the chisel pan mounting rod should not be tightened until the lathe bedway has been installed.*

4. Loosen tailstock lock lever (see **Figure 17**) and move tailstock to end of bedway, then retighten lock lever. This will help balance the lifting load.

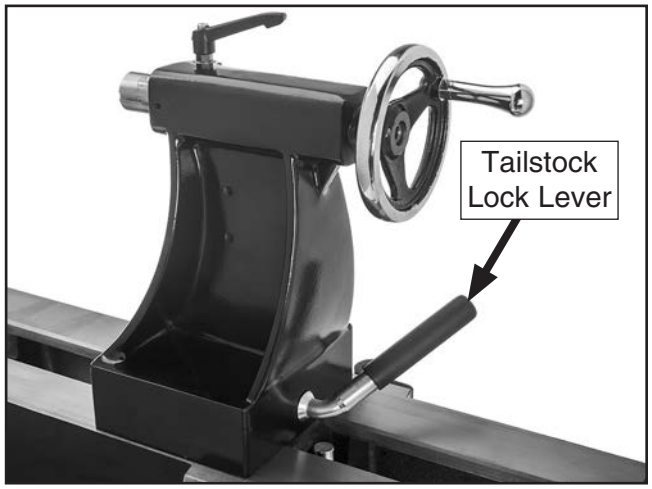

Figure 17. Location of tailstock lock lever.

5. Loosen toolrest base lock lever and move toolrest next to tailstock.

6. To further balance load, loosen headstock lock lever (see **Figure 18**) and move headstock to center of bedway.

Figure 18. Location of headstock control lever.

7. Wrap lifting straps around bedway (see **Figure 19**), with one strap at each end. Straps should be positioned next to bedway mounting points to maintain best balance.

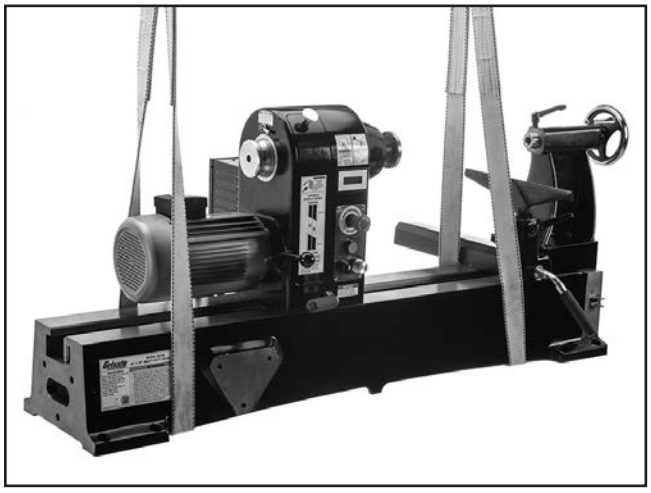

Figure 19. Lifting lathe with straps properly positioned.

8. Use a forklift and at least 2 other people to carefully position lathe assembly on top of legs.

9. Once mounting holes are aligned, secure lathe assembly to legs with (8) M12-1.75 x 35 cap screws, as shown in **Figure 20**.

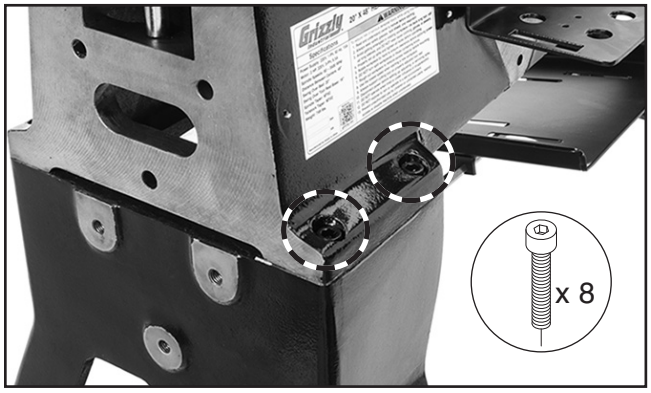

Figure 20. Securing lathe bedway to leg assembly.

10. If bolting lathe to floor, skip to **Step 13**.

11. With lathe still supported by lifting straps, use forklift to raise lathe 4 to 5 inches in preparation for installing machine feet (see **Figure 21**).

12. Remove top hex nut from feet, insert feet in mounting holes in leg (see **Figure 21**), then thread top hex nut back on. Do not tighten hex nuts yet.

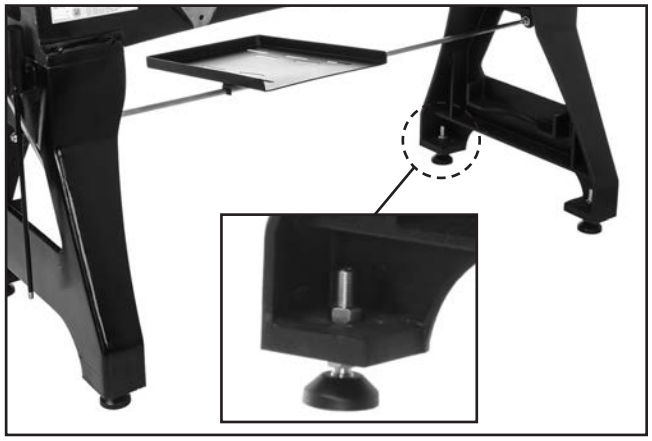

Figure 21. Machine lifted for feet installation.

13. Lower machine onto floor, place level on lathe bed, and make necessary adjustments so bed is level from side-to-side and front-to-back. This process will help bedways remain straight and flat.

Note: *For best results, use a precision level that is at least 12" long and sensitive enough to show a distance movement when a 0.003" shim (approximately the thickness of one sheet of standard newspaper) is placed under one end of the level.*

— If you are using machine feet, adjust top and bottom hex nuts on each leg to level bed; then tighten hex nuts to secure these adjustments.

— If you are bolting lathe to floor, use shims under legs to level bed; then tighten mounting fasteners.

14. Tighten hex nuts installed on chisel pan mounting rod in **Step 3** so they are flush against the inside of each leg. Then tighten lock nuts to completely secure mounting rod.

15. Use (2) M10-1.5 x 30 cap screws, (2) 10mm flat washers, and (2) 10mm lock washers to attach the chuck guard mounting arm to the back of the headstock (see **Figure 22**).

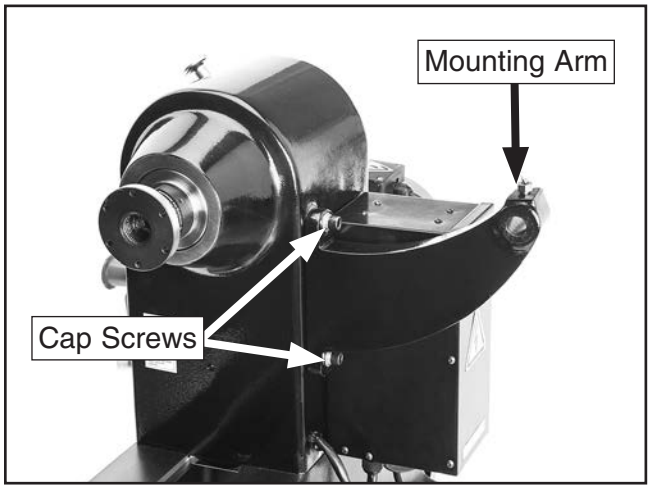

Figure 22. Chuck guard mounting arm installed.

16. Loosen M6-1 x 8 set screw on chuck guard outside lock collar and remove collar from shaft (see **Figure 23**).

17. Loosen set screw on inside lock collar so collar moves freely (see **Figure 23**).

18. Insert chuck guard shaft into arm, while lifting spring pin. Gently rotate chuck guard until spring pin settles into detent on shaft (see **Figure 23**).

19. Slide both lock collars up against chuck guard arm and tighten (see **Figure 23**).

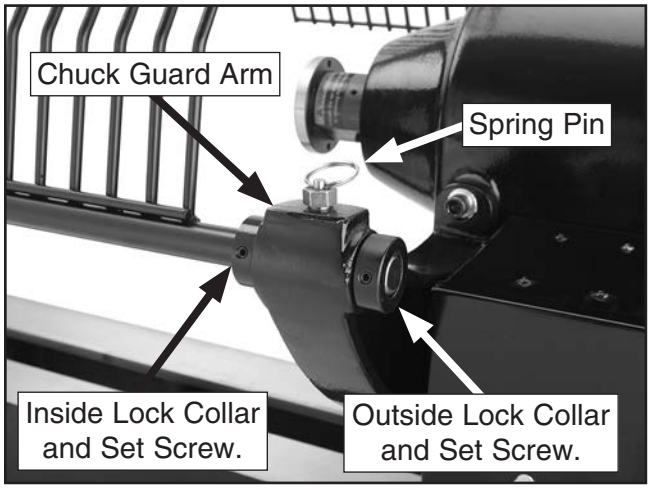

Figure 23. Chuck guard installed in mounting arm.

20. Use (2) M12-1.75 x 20 cap screws, (2) 12mm flat washers, and (2) 12mm lock washers to install tool rack at end of lathe bed (see **Figure 24**).

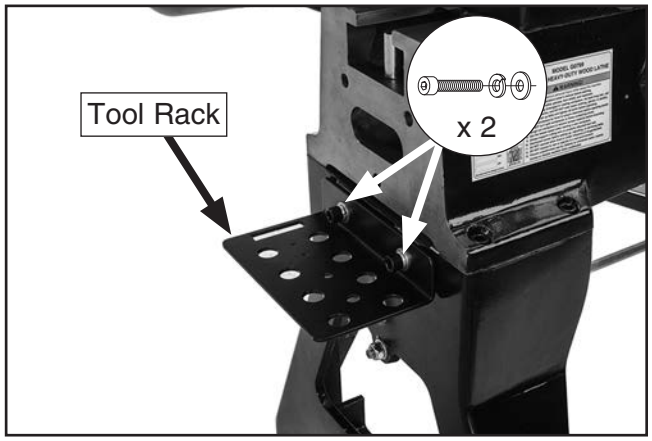

Figure 24. Tool rack mounted at end of bed.

Note: *The tool rack can also be installed on the front of the lathe bed (see **Figure 25**) using the same fasteners listed above.*

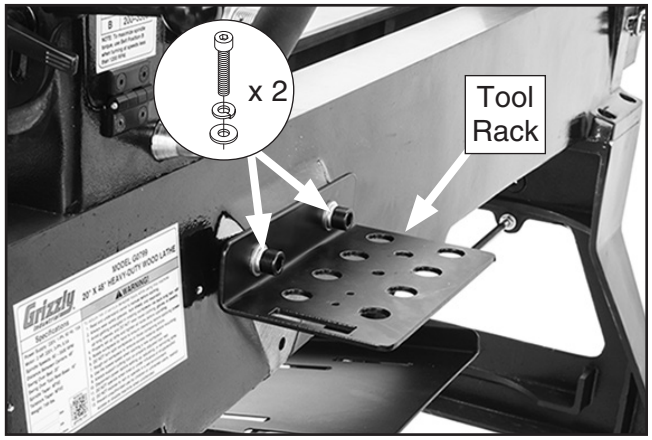

Figure 25. Tool rest mounted on front of bed.

21. Locate pre-installed lower hinge, hinge pin, and brass washer (see **Figure 26**) at end of lathe bed. Mount swing-away bed by lowering upper hinge onto hinge pin (see **Figure 27**). Leave M6-1 x 10 set screws loose for now.

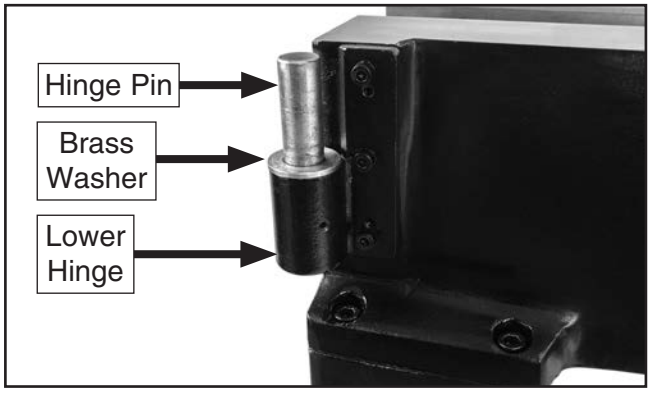

Figure 26. Lower hinge, hinge pin, and brass washer for mounting swing-away bed.

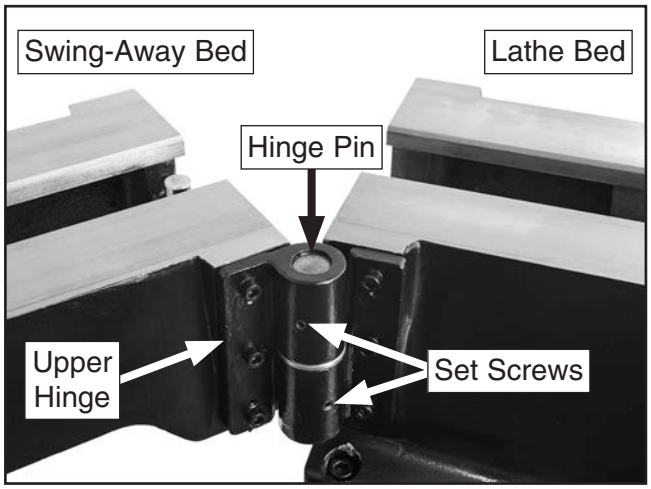

Figure 27. Swing-away bed hinge assembled.

22. Close and lock swing-away bed.

23. Place a straightedge across both bedways to check if they are flush.

—If bedways *are* flush, proceed to **Step 24**.

—If bedways *are not* flush, unlock and open swing-away bed, loosen hex nuts on eccentric bolts, and rotate both eccentric bolts ⅛ of a turn (see **Figure 28**). Close and lock swing-away bed again to check if bedways are flush. Continue process until bedways are even.

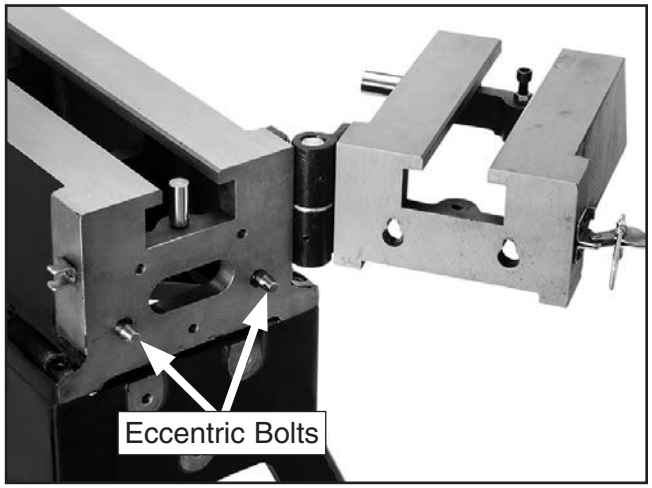

Figure 28. Eccentric bolts used to level swing-away bedways with lathe bedways.

Note: *This is a process of trial-and-error. Be patient and take your time when adjusting the bedways. When you are finished, the tailstock should slide smoothly across the seam where the bedways meet.*

24. Tighten hex nuts on eccentric bolts.

25. Tighten set screws on swing-away bed hinge (see **Step 21**).

Test Run

Once assembly is complete, test run the machine to ensure it is properly connected to power and safety components are functioning correctly.

If you find an unusual problem during the test run, immediately stop the machine, disconnect it from power, and fix the problem BEFORE operating the machine again. The **Troubleshooting** table in the **SERVICE** section of this manual can help.

The test run consists of verifying the following: 1) The motor powers up and runs correctly, and 2) the safety disabling mechanism on the switch works correctly.

⚠WARNING

Serious injury or death can result from using this machine BEFORE understanding its controls and related safety information. DO NOT operate, or allow others to operate, machine until the information is understood.

⚠WARNING

DO NOT start machine until all preceding setup instructions have been performed. Operating an improperly set up machine may result in malfunction or unexpected results that can lead to serious injury, death, or machine/property damage.

To test run machine:

1. Clear all setup tools away from machine.

2. Ensure spindle lock is turned left to the unlocked position.

3. Set spindle direction switch to neutral position and turn speed control knob all the way counterclockwise.

4. Press Emergency Stop button.

5. Connect machine to power supply. Digital readout should illuminate.

6. Twist Emergency Stop button clockwise until it springs out. This resets switch so spindle can turn.

7. Press blue RESET button.

8. Verify machine is operating correctly by turning spindle direction switch to "FWD" position, then slowly turn speed control knob clockwise.

   — When operating correctly, machine runs smoothly with little or no vibration or rubbing noises.

   — Investigate and correct strange or unusual noises or vibrations before operating machine further. Always disconnect machine from power when investigating or correcting potential problems.

9. Turn speed control knob all the way left.

10. Turn spindle direction switch to "REV" position, and slowly turn speed control knob clockwise.

    — When operating correctly, machine runs smoothly with little or no vibration or rubbing noises.

11. Move spindle direction switch to neutral position, and push in Emergency Stop button.

12. Without resetting Emergency Stop button, turn spindle direction switch to "FWD" and "REV" positions. Machine should not start at either position.

    — If machine *does not* start, Emergency Stop button safety feature is working correctly. Test run is complete.

    — If machine *does* start (with Emergency Stop button pushed in), immediately disconnect power to machine. Emergency Stop button safety feature is not working correctly. This safety feature must work properly before proceeding with regular operations. Call Tech Support for help.

Anchoring to Floor

Number of Mounting Holes 4
Diameter of Mounting Hardware..... 5/8"

Anchoring machinery to the floor prevents tipping or shifting and reduces vibration that may occur during operation, resulting in a machine that runs slightly quieter and feels more solid.

If the machine will be installed in a commercial or workplace setting, or if it is permanently connected (hardwired) to the power supply, local codes may require that it be anchored to the floor.

If not required by any local codes, fastening the machine to the floor is an optional step. If you choose not to do this with your machine, we recommend placing it on machine mounts, as these provide an easy method for leveling and they have vibration-absorbing pads.

Anchoring to Concrete Floors

Lag shield anchors with lag screws (see below) are a popular way to anchor machinery to a concrete floor, because the anchors sit flush with the floor surface, making it easy to unbolt and move the machine later, if needed. However, anytime local codes apply, you MUST follow the anchoring methodology specified by the code.

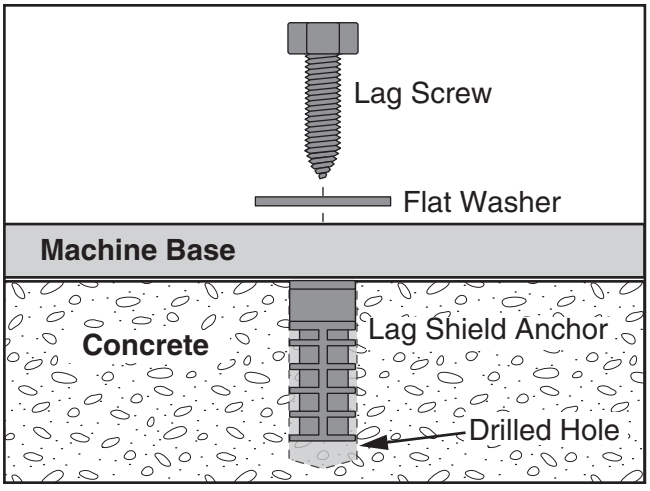

Figure 29. Popular method for anchoring machinery to a concrete floor.

SECTION 4: OPERATIONS

Operation Overview

The purpose of this overview is to provide the novice machine operator with a basic understanding of how the machine is used during operation, so the machine controls/components discussed later in this manual are easier to understand.

Due to the generic nature of this overview, it is **not** intended to be an instructional guide. To learn more about specific operations, read this entire manual, seek additional training from experienced machine operators, and do additional research outside of this manual by reading "how-to" books, trade magazines, or websites.

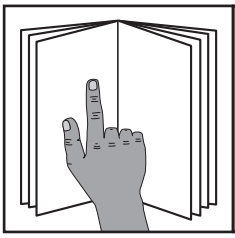

⚠WARNING

To reduce your risk of serious injury, read this entire manual BEFORE using machine.

⚠WARNING

Eye injuries or respiratory problems can occur while operating this tool. Wear personal protective equipment to reduce your risk from these hazards.

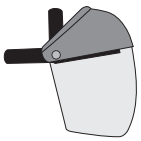

NOTICE

If you are not experienced with this type of machine, WE STRONGLY RECOMMEND that you seek additional training outside of this manual. Read books/magazines or get formal training before beginning any projects. Regardless of the content in this section, Grizzly Industrial will not be held liable for accidents caused by lack of training.

To complete a typical operation, the operator does the following:

1. Examines workpiece to make sure it is suitable for turning. No extreme bows, knots, or cracks should exist.
2. Prepares and trims up workpiece with a bandsaw or table saw to make it roughly concentric.
3. Installs workpiece between centers, or attaches it to faceplate or chuck.
4. Adjusts tool rest according to type of operation, and sets minimum clearance between workpiece and lip of tool rest to ¼" gap.
5. Rotates workpiece by hand to verify spindle and workpiece rotate freely throughout full range of motion.
6. Verifies pulley speed range is set for type of wood and size of workpiece installed.
7. Verifies speed control knob is turned all the way counterclockwise so spindle does not start in high speed.
8. Verifies spindle direction switch is set in neutral position.
9. Puts on safety glasses, face shield, and respirator.
10. Turns spindle direction switch to forward (FWD) or reverse (REV), adjusts lathe speed, and carefully begins turning operation, keeping chisel against tool rest entire time it is cutting.
11. Turns lathe ***OFF*** when cutting operation is complete.

Workpiece Inspection

Some workpieces are not safe to turn or may require modification before they are safe to turn. **Before turning, inspect all workpieces for the following:**

- ***Workpiece Type:***
  This machine is intended for turning natural wood products. Never attempt to turn any composite wood materials, plastics, metal, stone, or rubber workpieces; turning these materials can lead to machine damage or severe injury.

- ***Foreign Objects:***
  Nails, staples, dirt, rocks and other foreign objects are often embedded in wood. While cutting, these objects can become dislodged and hit the operator, cause tool grab, or break the turning tool, which might then fly apart. Always visually inspect your workpiece for these items. If they can't be removed, DO NOT turn the workpiece.

- ***Large/Loose Knots:***
  Loose knots can become dislodged during the turning operation. Large knots can cause a workpiece to completely break in half during turning and cause machine damage and injury. Choose workpieces that do not have large/loose knots.

- ***Excessive Warping:***
  Workpieces with excessive bowing or twisting are unstable and unbalanced. Never turn these workpieces at high speed, or instability will be magnified and the workpiece can be ejected from the lathe causing injury. Only turn concentric workpieces!

Adjusting Headstock

The headstock on this lathe is equipped with a cam-action clamping system to secure it to the lathe bed. When the lever is tightened, a locking plate lifts up underneath the bed and secures the tailstock in place. The headstock can be positioned anywhere along the lathe bed.

⚠WARNING

Always operate lathe with headstock firmly locked to bed. Otherwise, serious personal injury may occur, as workpiece or faceplate could shift during operation or be ejected from lathe.

To position headstock along length of bed:

1. DISCONNECT MACHINE FROM POWER!

2. Loosen headstock lock lever (see **Figure 30**).

Figure 30. Headstock lock lever location.

3. Slide headstock to desired location on bed, and use headstock lock lever to secure headstock in position.

   Note: *The large clamping lock nut underneath the headstock will require occasional adjusting to ensure proper clamping pressure of the headstock to the bed. Turn this lock nut in small increments to fine tune the clamping pressure as needed.*

Adjusting Tailstock

The tailstock adjusts in the same manner as the headstock.

⚠WARNING

Always operate lathe with tailstock firmly locked to bed or swing-away bed extension. Otherwise, serious personal injury may occur by tailstock moving during operation and workpiece being ejected at high speed.

To position tailstock along length of bed:

1. Loosen tailstock lock lever and move tailstock to desired position along bed, as shown in **Figure 30**.

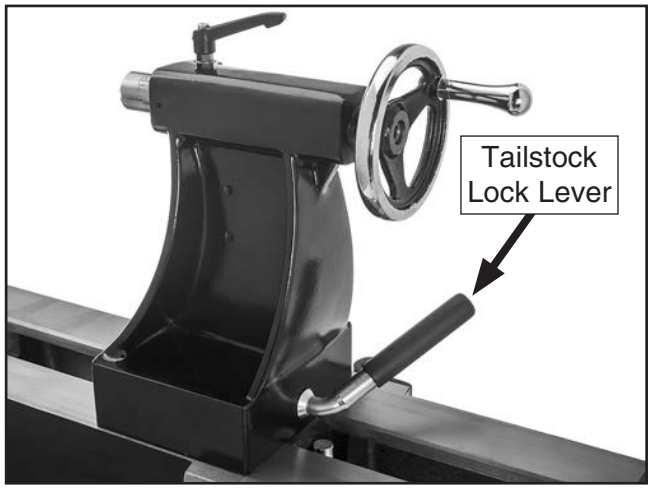

Figure 31. Location of tailstock lock lever.

2. Retighten tailstock lock lever to secure tailstock to bed.

   Note: *The large clamping lock nut underneath the tailstock will require occasional adjusting to ensure proper clamping pressure of the tailstock to the bed. Turn this lock nut in small increments to fine tune the clamping pressure as needed.*

Adjusting Tool Rest

The tool rest assembly consists of two components: the tool rest base (or banjo) and the tool rest. The tool rest base moves forward/backward and along the length of the lathe bed. The tool rest rotates and moves up and down in the tool rest base. Locks for both components allow you to secure the tool rest in position after making these adjustments.

When adjusting the tool rest, position it as close as possible to the workpiece without actually touching it. This maximizes support where the cutting occurs and minimizes leverage, reducing the risk of injury if a "catch" occurs.

Many woodturners typically set the height of the tool rest ⅛" above or below the centerline of the workpiece, depending on their height, the type of tool they're using, and the type of operation they're performing.

As a rule of thumb: For most (spindle) turning operations, the cutting tool should contact the workpiece slightly above centerline. For most inside (bowl) turning operations, the cutting tool should contact the workpiece slightly below centerline.

Keeping all these factors in mind, your main goal when adjusting the tool rest should be providing maximum support for the type of tool being used, in a position that is safe and comfortable for you.

⚠WARNING

Improperly supported or positioned cutting tools can "catch" on workpiece, ejecting tool from your hands with great force. To reduce this risk, always ensure tool rest is properly positioned for each type of operation, cutting tool is firmly supported against tool rest BEFORE cutting, and cutting tool is properly positioned to cut at the correct angle for tool and operation type.

To adjust tool rest:

1. Loosen tool rest base lock lever and move tool rest assembly to desired position on lathe bed, as shown in **Figure 31**.

   Note: *To maximize support, the tool rest base should always be locked on both sides of the bed. Never pull the tool rest so far back that it is only secured on one side.*

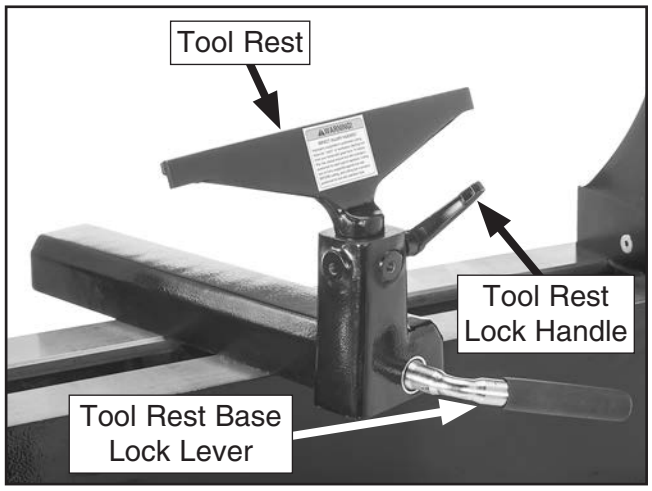

Figure 32. Tool rest controls.

2. Retighten tool rest base lock lever to secure tool rest assembly in position.

   Note: *The large clamping lock nut underneath the tool rest base will require occasional adjusting to ensure proper clamping pressure of the tool rest assembly to the bed. Turn this lock nut in small increments to fine tune the clamping pressure as needed.*

⚠WARNING

Always operate lathe with tool rest assembly firmly locked in position. Otherwise, serious personal injury may occur by tool being pulled from operator's hands.

3. Loosen tool rest lock handle (see **Figure 31**).

4. Position tool rest in desired location.

5. Retighten tool rest lock handle to secure tool rest in position.

Installing/Removing Headstock Center

The included spur center installs in the headstock spindle with an MT#2 tapered fit.

Installing Headstock Center

1. DISCONNECT MACHINE FROM POWER!

2. Make sure mating surfaces of center and spindle are free of debris and oily substances before inserting center to ensure a good fit and reduce runout.

3. Insert tapered end of center into spindle, and push it in with a quick, firm motion, as shown in **Figure 33**.

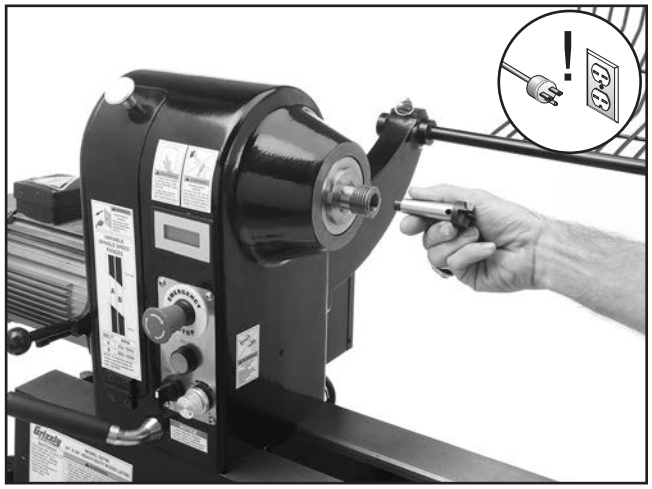

Figure 33. Installing center in headstock spindle.

4. Make sure center is securely installed by attempting to pull it out by hand—a properly installed center will not pull out easily.

Removing Headstock Center

1. DISCONNECT MACHINE FROM POWER!

2. Hold a clean rag under spindle or wear leather glove to catch center when you remove it.

3. Insert knockout tool through outbound end of spindle and firmly tap back of center, catching it as it falls, as shown in **Figure 34**.

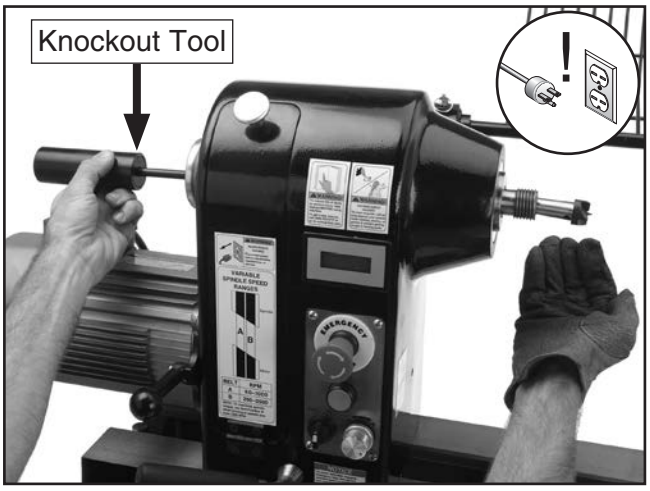

Figure 34. Removing headstock center with knock-out tool.

Installing/Removing Tailstock Center

The included live center installs into the tailstock quill with an MT#2 tapered fit.

Installing Tailstock Center

1. Loosen quill lock handle, and rotate handwheel until quill extends about 1", as shown in **Figure 35**.

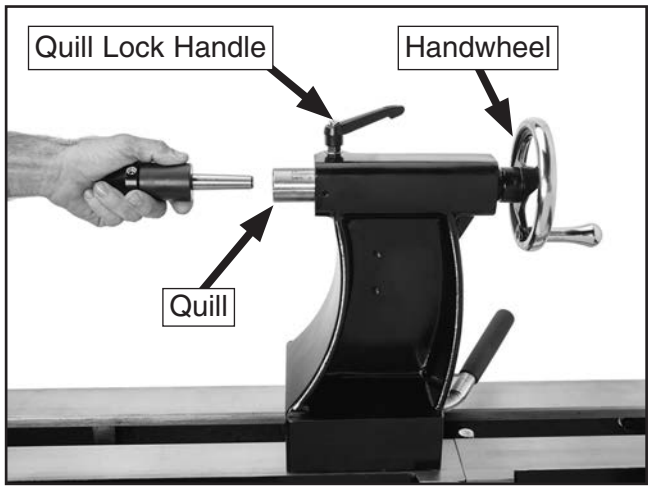

Figure 35. Installing center into tailstock quill.

2. Make sure mating surfaces of center and quill are free of debris and oily substances before inserting center to ensure a good fit and reduce runout.

3. Firmly insert tapered end of center into tailstock quill, as shown in **Figure 35**.

4. Make sure center is securely installed by attempting to pull it out by hand—a properly installed center will not pull out easily.

5. Secure quill in place by retightening quill lock handle.

Removing Tailstock Center

1. Loosen quill lock handle.

2. Hold a clean rag under spindle or wear a glove to catch center when you remove it.

3. Rotate handwheel counterclockwise—tailstock quill will retract back into quill, causing center to be forced out.

Installing Faceplate

To install faceplate:

1. DISCONNECT MACHINE FROM POWER!

2. Rotate spindle lock right to prevent spindle from turning while you tighten faceplate, as shown in **Figure 36**.

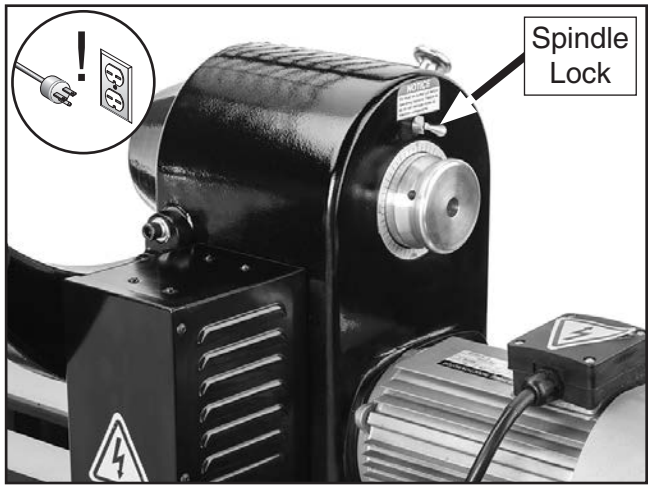

Figure 36. Locking spindle to install faceplate.

⚠WARNING

To prevent faceplate and workpiece separating from spindle during operation, headstock faceplate MUST be firmly threaded onto spindle and secured in place by fully tightening the two faceplate set screws. If these instructions are not properly performed, serious personal injury could occur.

3. Thread faceplate onto spindle until it is snug (see **Figure 37**).

4. Tighten (2) M6-1 x 10 set screws along inside diameter of faceplate to secure it to spindle (see **Figure 37**).

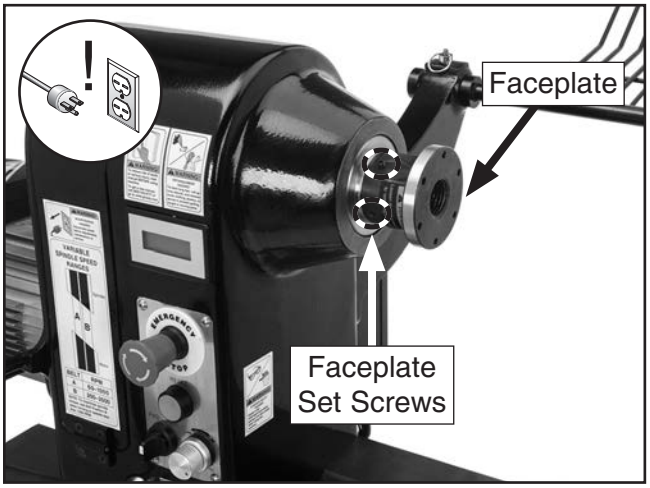

Figure 37. Location of faceplate set screws.

Note: *To remove faceplate, disconnect lathe from power source and perform steps above in reverse.*

5. Rotate spindle lock left to unlock spindle.

⚠CAUTION

Never resume turning operations without making sure that spindle lock is disengaged and spindle turns freely by hand. Otherwise personal injury or property damage could result.

Changing Speed Ranges

The pulley belt configurations on this lathe provide two speed ranges (see **Figure 38**).

Note: *To maximize spindle torque, use low spindle speed range for spindle speeds of 1000 RPM or less.*

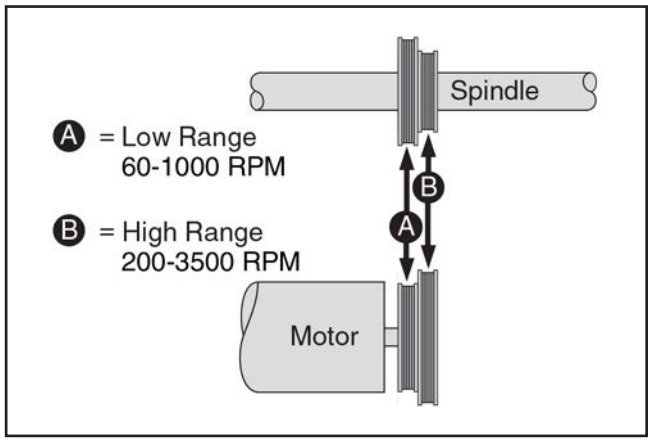

Figure 38. Speed range belt positions.

Refer to speed recommendations chart in **Figure 39** to choose appropriate RPM for your operation. Then choose speed range that will include selected RPM.

Diameter of Workpiece	Roughing RPM	General Cutting RPM	Finishing RPM
Under 2"	1600	3500	3500
2–4"	800	1600	2500
4–6"	500	1100	1700
6–8"	400	800	1250
8–10"	300	700	1000
10–12"	250	550	900
12–16"	200	450	680
16–20"	150	350	550
20–24"	100	280	400
Outboard	80	200	300

Figure 39. Speed recommendations.

⚠WARNING

Always choose correct spindle speed for an operation. Using wrong speed may lead to workpiece being thrown at high speed, causing fatal or severe impact injuries.

To change speed ranges:

1. DISCONNECT MACHINE FROM POWER!

2. Open belt access cover, as shown in **Figure 40**.

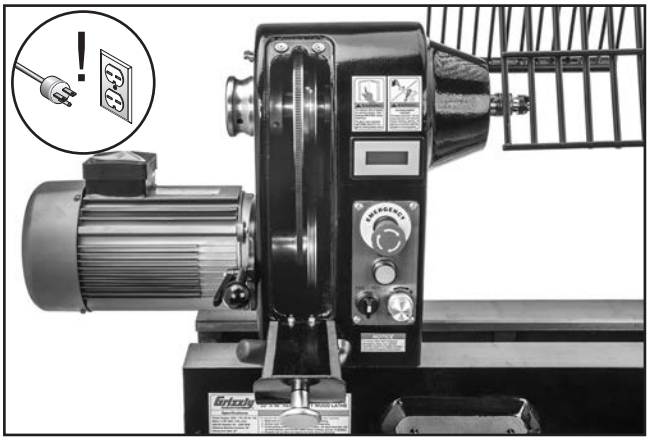

Figure 40. Belt access cover removed.

3. Loosen belt tension lock handle (see **Figure 41**).

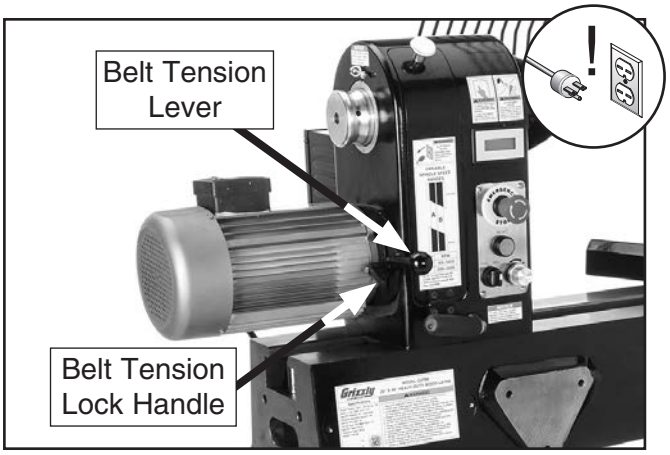

Figure 41. Belt tension lever and lock handle.

4. Use belt tension lever (see **Figure 41**) to lift motor assembly all the way up, then retighten belt tension lock handle—this will hold motor in place while you change belt position.

5. Reach into belt access cavity and roll belt onto desired set of pulleys, as shown in **Figure 41**.

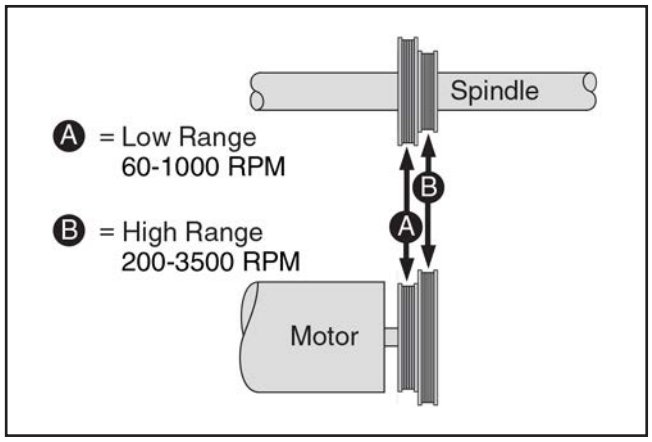

Figure 42. Speed range belt positions.

6. Loosen belt tension lock handle and lower motor.

7. Apply downward pressure on belt tension lever to properly tension drive belt, then re-tighten belt tension lock handle.

   Note: *When properly tensioned, belt should deflect about ½" when moderate pressure is applied to belt mid-way between upper and lower pulley, as shown in* ***Figure*** **43**.

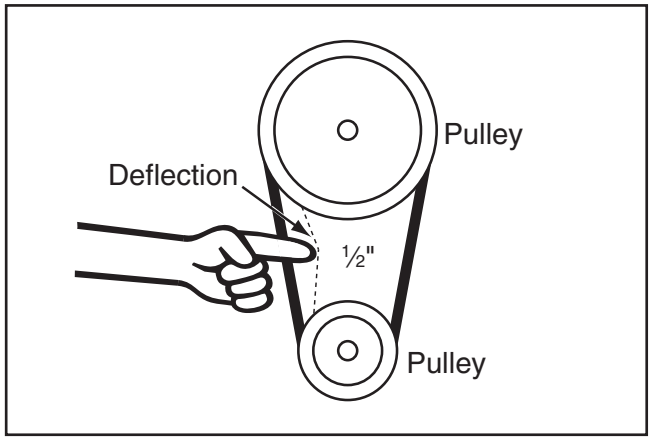

Figure 43. Testing for ½" belt deflection.

8. Close front belt access cover.

Indexing

Indexing on a lathe is typically used for workpiece layout and other auxiliary operations that require equal distances around the workpiece circumference, such as clock faces or inlays.

By rotating the spindle handwheel (see **Figure 44**) to any one of the marks on the degree indicator, the workpiece can be positioned in 7.5° increments. Once the workpiece is correctly oriented for the operation, the spindle lock can be rotated full right to secure the position.

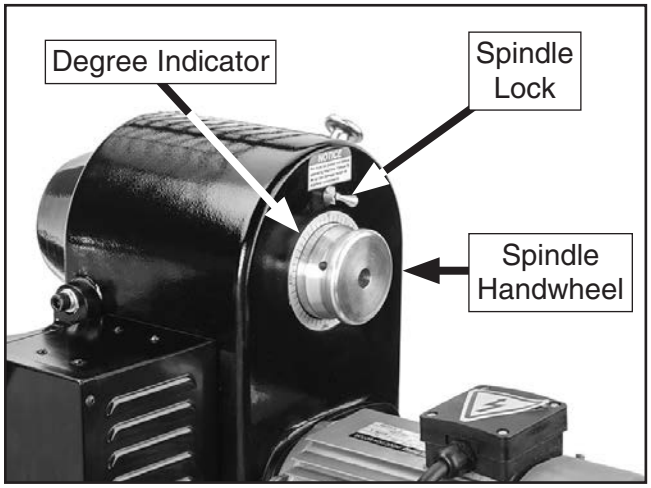

Figure 44. Components used in indexing operations.

⚠CAUTION

Always disconnect lathe from power before using indexing feature. DO NOT start lathe with spindle lock engaged; otherwise lathe could be damaged.

Spindle Turning

Spindle turning is the operation performed when a workpiece is mounted between centers in the headstock and tailstock, as shown in **Figure 45**. Bowls, table legs, tool handles, and candlesticks are typical projects where this operation is used.

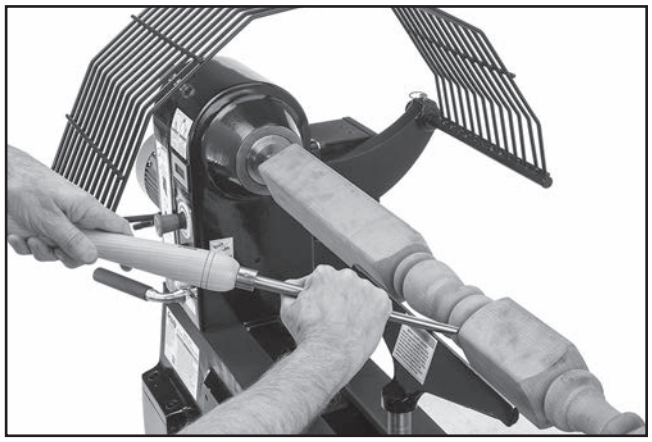

Figure 45. Typical spindle turning operation.

⚠WARNING

Damage to your eyes and lungs could result from using this machine without proper protective gear. Always wear safety glasses, a face shield, and a respirator when operating this machine.

To set up a spindle turning operation:

1. Find center point of both ends of your workpiece by drawing diagonal lines from corner to corner across end of workpiece, as shown in **Figure 46**.

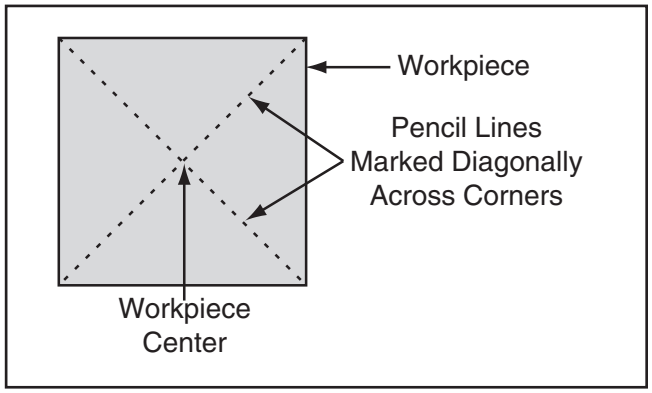

Figure 46. Workpiece marked diagonally from corner to corner to determine the center.

2. Make a center mark by using a wood mallet and tapping point of spur center into center of workpiece on both ends.

3. Using a ¼" drill bit, drill a ¼" deep hole at center mark on end of the workpiece to be mounted on headstock spur center.

4. To help embed spur center into workpiece, cut ⅛" deep saw kerfs in headstock end of workpiece along diagonal lines marked in **Step 1**.

5. If your workpiece is over 2" x 2", cut corners off workpiece lengthwise to make turning safer and easier (see **Figure 47**).

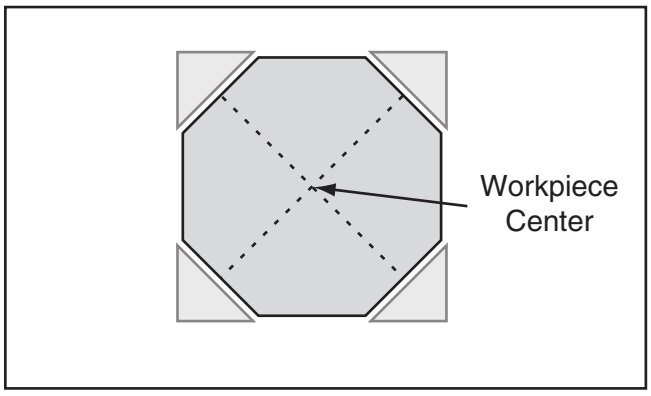

Figure 47. Corners of workpiece removed.

6. Drive spur center into end center mark of workpiece with a wood mallet to embed it at least ¼" into workpiece, as shown in **Figure 48**.

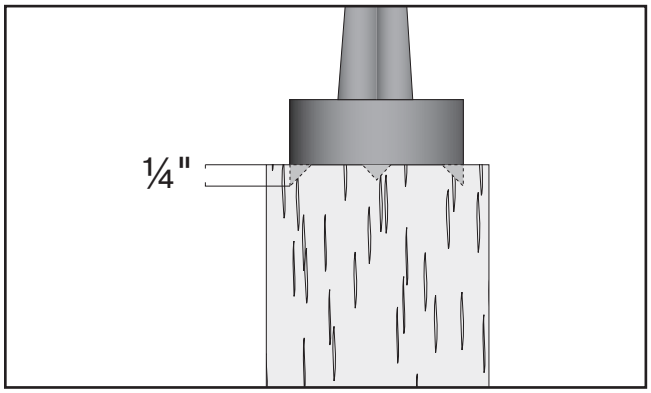

Figure 48. Spur center properly embedded.

7. With workpiece still attached, insert spur center into headstock spindle (refer to **Installing/ Removing Headstock Center** on **Page 32** for additional instructions).

   Note: *Use tool rest to support opposite end of workpiece so that workpiece and spur center do not separate during installation.*

8. Install live center into tailstock quill and tighten quill lock handle to lock quill in position (refer to **Page 33** for additional instructions).

9. Slide tailstock toward workpiece until point of live center touches workpiece center mark, then lock tailstock in this position.

10. Loosen quill lock handle and rotate tailstock handwheel to push live center into workpiece at least ¼".

⚠WARNING

Do not press the workpiece too firmly with the tailstock or the bearings will bind and overheat. Do not adjust the tailstock too loosely or the workpiece will spin off the lathe. Use good judgment and care, otherwise, serious personal injury could result from the workpiece being ejected at high speeds.

11. Properly adjust tool rest to workpiece (see **Adjusting Tool Rest** on **Page 30**).

12. Before beginning lathe operation, rotate workpiece by hand to ensure there is safe clearance on all sides.

⚠WARNING

Keep lathe tool resting on tool rest the ENTIRE time it is in contact with workpiece or when preparing to make contact between lathe tool and workpiece. Otherwise, spinning workpiece could force lathe tool out of your hands or entangle your hands with workpiece. Failure to heed this warning could result in serious personal injury.

Spindle Turning Tips:

- When turning the lathe ***ON***, stand away from the path of the spinning workpiece until the spindle reaches full speed and you can verify that the workpiece will not come loose.

- Use the slowest speed when starting or stopping the lathe.

- Select the right speed for the size of workpiece that you are turning (refer to **Figure 39** on **Page 35**).

- Keep the turning tool on the tool rest the ENTIRE time that it is in contact with the workpiece.

- Learn the correct techniques for each tool you will use. If you are unsure about how to use the lathe tools, read books or magazines about lathe techniques, and seek training from experienced and knowledgeable lathe users.

⚠WARNING

Eye injuries or respiratory problems can occur while operating this tool. Wear personal protective equipment to reduce your risk from these hazards.

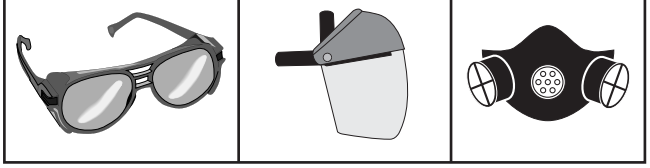

Faceplate Turning

Faceplate turning is when a workpiece is mounted to the faceplate, which is then mounted to the headstock spindle, as shown in **Figure 49**. This type of turning is usually done with open-faced workpieces like bowls or plates.

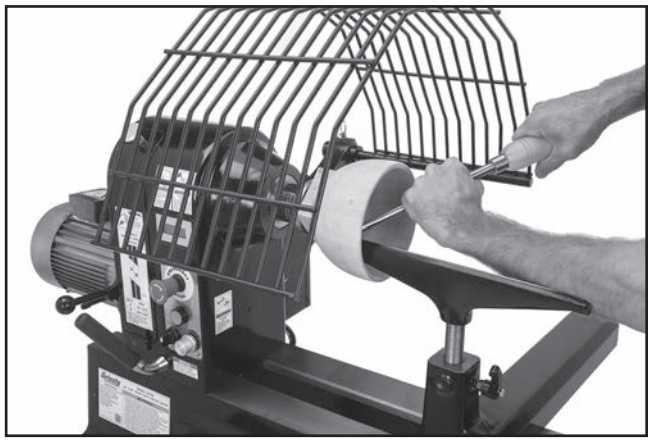

Figure 49. Typical faceplate turning operation.

Mounting Workpiece on Faceplate

1. Mark workpiece center in same manner as described in **Spindle Turning** (see **Page 37**).

Note: *Cut off corners of workpiece to make it as close to "round" as possible, as described in **Spindle Turning**, **Step 5** (see **Page 37**).*

2. Center faceplate on workpiece and attach it (see **Figure 50**) with wood screws.

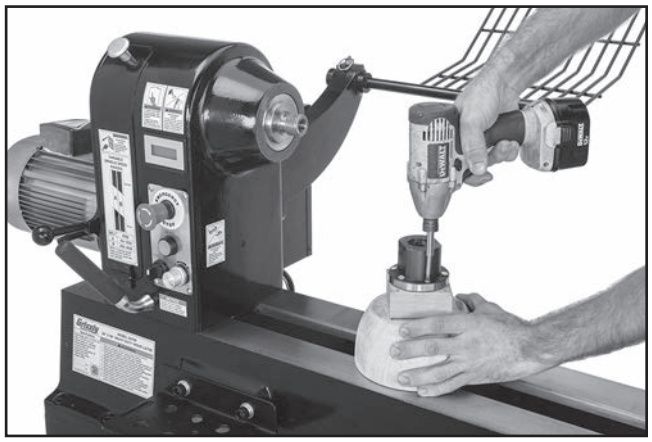

Figure 50. Typical attachment of faceplate to workpiece.

NOTICE

Only use screws with non-tapered heads (see Figure 51) to attach faceplate to the workpiece. Screws with tapered heads can split faceplate or snap off during operation.

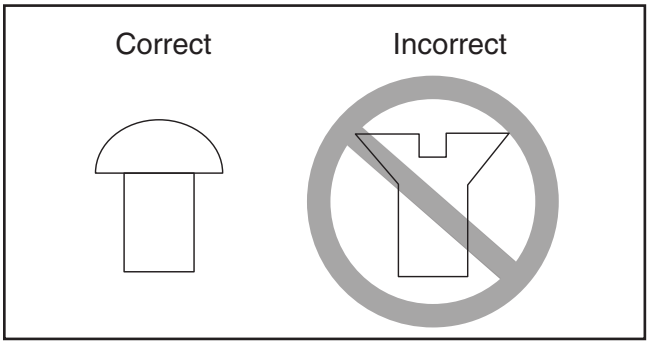

Figure 51. Correct and incorrect screw types.

3. Thread and secure faceplate onto headstock spindle (refer to **Installing Faceplate** on **Page 34**).

— If wood screws cannot be placed in workpiece, faceplate can be mounted to a backing block attached to workpiece (see **Mounting Workpiece on Backing Block**).

Mounting Workpiece on Backing Block

1. Make backing block from a suitable size piece of scrap wood.

   Note: *Faces of backing block must be flat and parallel to each other, or uneven surfaces will cause workpiece to spin eccentrically, causing unnecessary vibration and runout. It is best to mount backing block to faceplate and turn other surface flat prior to mounting.*

2. Locate and mark center of workpiece and backing block.

3. Drill a ¼" hole through center of backing block.

4. Look through hole in backing block to line up center with workpiece and glue and clamp backing block to workpiece.

   Note: *Allow glue to cure according to manufacturer's instructions.*

5. Follow **Steps 1–3** under **Mounting Workpiece on Faceplate** (see **Page 39**) to attach backing block to faceplate.

Outboard Turning

Outboard turning is a variation of faceplate turning and is accomplished with the headstock positioned so the faceplate is not directly over the bed, allowing a larger turning capacity than the swing specification of the lathe.

This lathe can be easily configured for outboard turning by sliding the tailstock onto the swing-away bed and rotating it out of the way. The headstock can then be moved all the way to the other end of the bed.

To outboard turn:

1. DISCONNECT MACHINE FROM POWER!

2. Loosen tailstock, slide onto swing-away bed, and rotate out of the way.

3. Remove toolrest base from machine by removing hex nuts and clamp washers located underneath assembly, then lifting it from lathe bed.

4. Loosen headstock, then move it all the way to tail end of lathe bed, as shown in **Figure 52**.

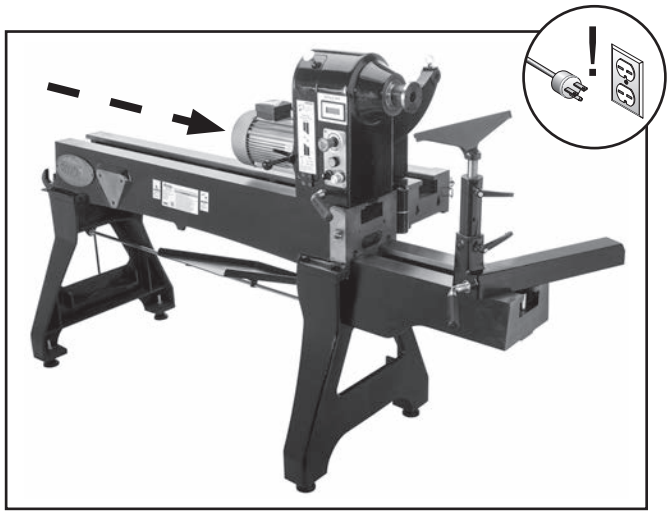

Figure 52. Typical outboard turning operation. (Shown here with Model T27484 Bed Extension and Tool Rest Riser Bushing.)

5. Retighten headstock to bed.

⚠WARNING

When outboard turning, ALWAYS use a floor-mounted tool rest and keep tool in contact with rest during all turning operations. Failure to do so could cause tool to be pulled out of operator's control and ejected at high speed.

Sanding/Finishing

After the turning operations are complete, the workpiece can be sanded and finished before removing it from the lathe, as shown in **Figure 53**.

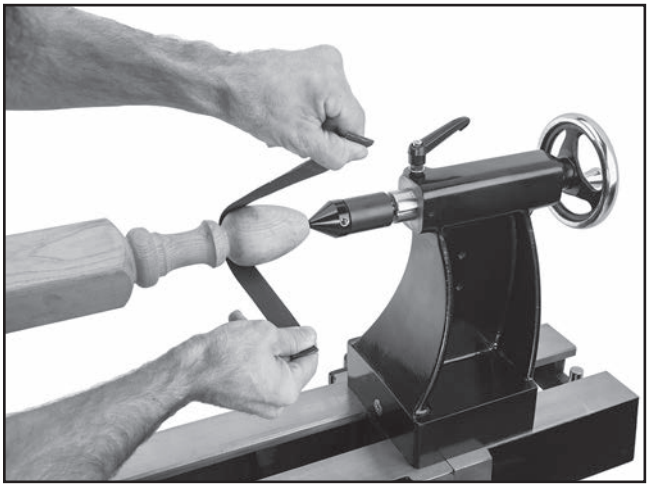

Figure 53. Typical sanding operation.

Note: *Whenever sanding or finishing, move tool rest holder out of the way to increase personal safety and gain adequate working room.*

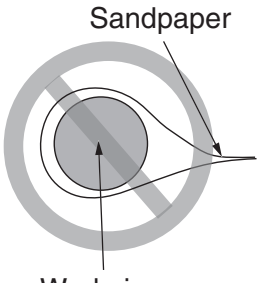

⚠WARNING

Wrapping sandpaper completely around workpiece could pull your hands into moving workpiece and may cause serious injury. Never wrap sandpaper or finishing materials completely around workpiece.

Selecting Turning Tools

Lathe tools come in a variety of shapes and sizes, and usually fall into five major categories.

- **Gouges**—Mainly used for rough cutting, detail cutting, and cove profiles. The rough gouge is a hollow, double-ground tool with a round nose, and the detail gouge is a hollow, double-ground tool with either a round or pointed nose.

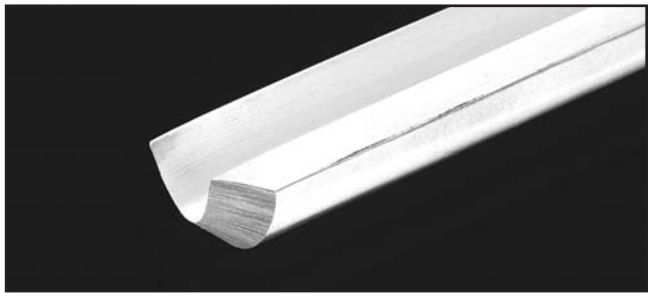

Figure 54. Example of a gouge.

- **Skew Chisel**—A very versatile tool that can be used for planing, squaring, V-cutting, beading, and parting off. The skew chisel is flat, double-ground with one side higher than the other (usually at an angle of 20°–40°).

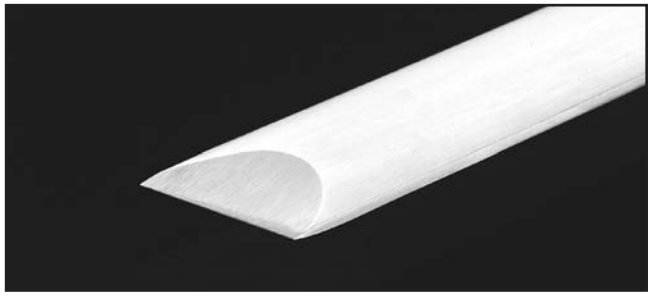

Figure 55. Example of a skew chisel.

- **Scrapers**—Typically used where access for other tools is limited, such as hollowing operations. This is a flat, double-ground tool that comes in a variety of profiles (round nose, spear point, square nose, etc.) to match many different contours.

Figure 56. Example of a round nose scraper.

- **Parting Tools**—Used for sizing and cutting off work. This is a flat tool with a sharp pointed nose that may be single- or double-ground.

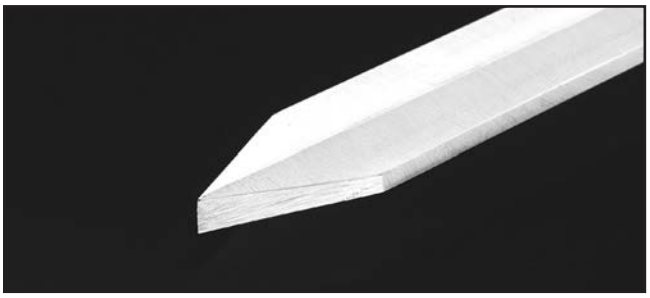

Figure 57. Example of a parting tool.

- **Specialty Tools**—These are the unique, special function tools to aid in hollowing, bowl making, cutting profiles, etc. The Swan Neck Hollowing Tool shown on **Page 45** is a good example of a speciality tool.

SECTION 5: ACCESSORIES

⚠WARNING

Installing unapproved accessories may cause machine to malfunction, resulting in serious personal injury or machine damage. To reduce this risk, only install accessories recommended for this machine by Grizzly.

NOTICE

Refer to our website or latest catalog for additional recommended accessories.

Sovereign Turning System

Sovereign is a new handle and tool system allowing the turner to customize the tools they need for the type of turning they do. Sold with or without 3/8" and 1/2" collet options, plus the gamut of tool tips will make you wonder how you managed without a Sovereign. All tools are high speed steel construction for long life and dependable use. Below are just some of the options available with this system.

T21644—16" Sovereign System w/Collets
T21645—22" Sovereign System w/Collets
T21648—Sovereign 3/8" Collets
T21649—Sovereign 1/2" Collets
T21654—1/4" Bowl Gouge
T21655—1/4" Fingernail Bowl Gouge
T21656—3/8" Bowl Gouge
T21660—3/4" Bowl Gouge

Figure 58. Sovereign 16" and 22" handles.

T27484—20" Bed Extension for G0799 G0800

This Extension Bed is designed to mount to any of three positions for maximum turning versatility. When mounted in the tail position for increased bowl turning swing, the Tool Rest Riser Bushing increases the height of the tool rest for optimum chisel height.

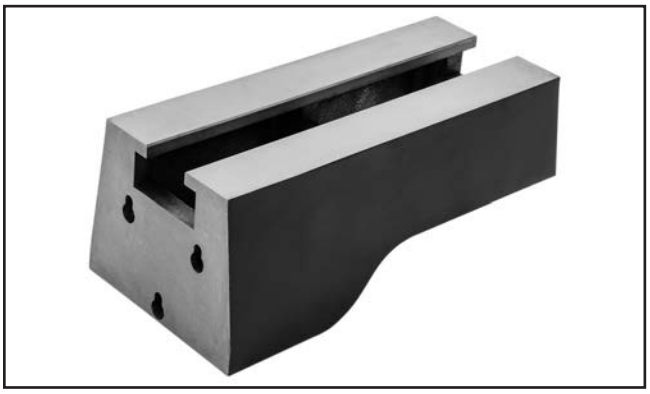

Figure 59. Model T27484 20" Bed Extension for G0799 and G0800.

Basic Eye Protection

T20501—Face Shield Crown Protector 4"
T20502—Face Shield Crown Protector 7"
T20503—Face Shield Window
T20451—"Kirova" Clear Safety Glasses
T20452—"Kirova" Anti-Reflective S. Glasses
T20456—DAKURA Safety Glasses, Black/Clear

Figure 60. Assortment of basic eye protection.

T27483—Comparator Arm for G0799
T27812— Comparator Arm for G0800
The Comparator Arm mounts to the tailstock and utilizes the spindle guard mount on the headstock. For spindle turning, the Comparator Arm can hold a master spindle for easy layout transfer and diameter gauging. Very efficient when turning a spindle copy!

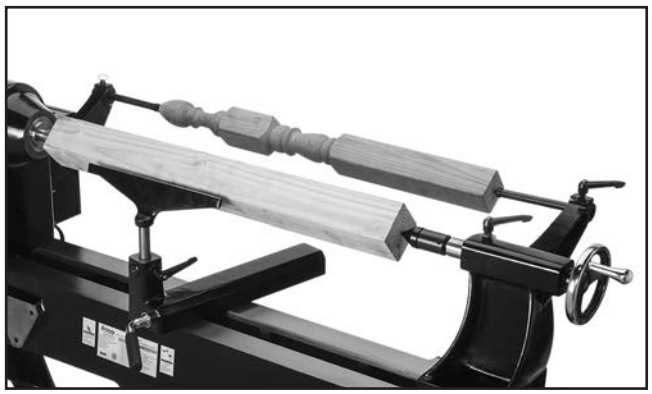

Figure 61. Comparator Arms for G0799 and G0800.

T10117—Big Mouth Dust Hood with Stand
Capture dust from any machine operation with this Big Mouth Dust Hood. Simply attach a 4" dust collection hose and adjust the hood right where you need it. The free standing base eliminates complicated machine set-ups and the tilting 16⅜" x 12⅞" hood adjusts from 23" to 43" high. Every shop needs one of these!

Figure 62. Model T10117 Big Mouth Dust Hood.

T25647—4" Easy Chuck 1-1/4"-8TPI
The Easy Jaw™ System allows you to change from one set of jaws to the next in about 30 seconds. The patent-pending Snap-Lock Technology uses no jaw screws or wrenches to exchange jaws; simply use the supplied jaw key to depress a keeper latch in the jaw and slide each jaw right out. You then slide in the next jaw type until you hear the “snap.” This gets you back to turning quickly with the jaws you need to hang on to your project safely. The Easy Chuck’s Zoom Ring™ also gives you the ability to open and close the chuck very quickly for various gripping diameters.

Figure 63. Model T25647 4" Easy Chuck.

D3789—Lathe Chisel Set, 6-Pc.
Beautiful black walnut handles are contoured to fit your hands in any position, and high-speed steel (HSS) blades hold their edges for producing continuous ribbons of wood. Includes all of the standard lathe tools plus a 22-3/4” long 1/2” spindle gouge for all-day leverage and control. This set also comes with a sturdy aluminum case.

Figure 64. Model D3789—Lathe Chisel Set, 6-Pc.

order online at www.grizzly.com or call 1-800-523-4777

SECTION 6: MAINTENANCE

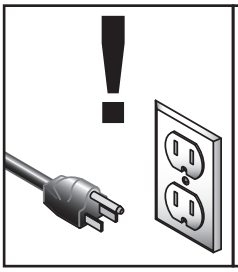

⚠WARNING

To reduce risk of shock or accidental startup, always disconnect machine from power before adjustments, maintenance, or service.

Schedule

For optimum performance from your machine, follow this maintenance schedule and refer to any specific instructions given in this section.

Ongoing:
- Loose faceplate or mounting bolts.
- Damaged center or tooling.
- Worn or damaged wires.
- Loose machine components.
- Any other unsafe condition.

Daily:
- Clean off dust buildup.
- Clean and lubricate lathe bed, spindle, and quill.

Monthly:
- Belt tension, damage, or wear.
- Clean out dust buildup from inside belt/pulley cavity.

Cleaning & Protecting

Cleaning this lathe is relatively easy. Vacuum excess wood chips and sawdust, and wipe off the remaining dust with a dry cloth. If any resin has built up, use a resin dissolving cleaner to remove it.

Protect the unpainted cast iron surfaces by wiping them clean after every use—this ensures moisture from wood dust does not remain on bare metal surfaces. Keep the surfaces rust-free with regular applications of products like G96® Gun Treatment, SLIPIT®, or Boeshield® T-9 (see **Page 45** for more details).

Lubrication

All bearings on this lathe are lubricated and sealed at the factory, and do not need additional lubrication.

Wipe a lightly oiled shop rag on the outside of the headstock spindle. DO NOT allow any oil to get on the inside mating surfaces of the spindle.

Use the tailstock handwheel to extend the quill out to the furthest position and apply a thin coat of white lithium grease to the outside of the quill. DO NOT allow any oil or grease to get on the inside mating surfaces of the quill.

Every 4–6 months, apply a few of drops of light machine oil to the swing-away bed hinge.

SECTION 7: SERVICE

Review the troubleshooting and procedures in this section if a problem develops with your machine. If you need replacement parts or additional help with a procedure, call our Technical Support. **Note:** *Please gather the serial number and manufacture date of your machine before calling.*

Troubleshooting

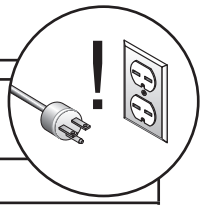

Motor & Electrical

Symptom	Possible Cause	Possible Solution
Machine does not start or immediately shuts down after startup.	1. Emergency stop button depressed. 2. Incorrect power supply voltage or circuit size. 3. Power supply circuit breaker tripped or fuse blown. 4. Motor wires connected incorrectly. 5. Wiring open/has high resistance. 6. ON/OFF switch at fault. 7. Emergency stop button at fault. 8. Variable-speed potentiometer at fault. 9. Inverter/control box at fault. 10. Motor at fault.	1. Twist button clockwise to reset. 2. Ensure correct power supply voltage and circuit size. 3. Ensure circuit is sized correctly and free of shorts. Reset circuit breaker or replace fuse. 4. Correct motor wiring connections. 5. Check/fix broken, disconnected, or corroded wires. 6. Replace switch. 7. Replace. 8. Replace. 9. Inspect inverter/controller box; replace. 10. Repair/replace.
Machine stalls or is underpowered.	1. Machine undersized for task. 2. Workpiece material not suitable for machine. 3. Feed rate/cutting speed too fast. 4. Belt slipping. 5. Pulley slipping on shaft. 6. Motor overheated. 7. Motor wired incorrectly. 8. Plug/receptacle at fault. 9. Motor at fault.	1. Use sharp chisels; reduce feed rate/depth of cut. 2. Only cut wood/ensure moisture is below 20%. 3. Decrease feed rate/cutting speed (**Page 35**). 4. Tension/replace belt; ensure pulleys are aligned (**Page 48**); belts are clean and not damaged. 5. Replace loose pulley/shaft; tighten pulley set screws. 6. Clean motor, let cool, and reduce workload. 7. Wire motor correctly. 8. Test for good contacts/correct wiring. 9. Repair/replace.
Machine has vibration or noisy operation.	1. Motor or component loose. 2. Machine incorrectly mounted or sits unevenly on floor. 3. Belt worn, loose, or slapping cover. 4. Pulley loose. 5. Motor fan rubbing on fan cover. 6. Motor mount loose/broken. 7. Motor bearings at fault. 8. Workpiece/faceplate at fault.	1. Inspect/replace damaged bolts/nuts, and retighten with thread locking fluid. 2. Tighten/replace anchor studs in floor; relocate/shim machine; adjust feet. 3. Inspect/replace belt. Ensure pulleys are aligned. 4. Tighten pulley set screw; re-align/replace shaft, pulley set screw, and key. 5. Fix/replace fan cover; replace loose/damaged fan. 6. Tighten/replace. 7. Test by rotating shaft; rotational grinding/loose shaft requires bearing replacement. 8. Center workpiece in chuck/faceplate; reduce RPM.

Wood Lathe Operation

Symptom	Possible Cause	Possible Solution
Bad surface finish.	1. Dull tooling or wrong tool used for task. 2. Tool height is not ⅛" above spindle centerline. 3. Spindle speed is wrong. 4. Excessive vibration.	1. Sharpen tooling, select correct tool for operation. 2. Adjust tool rest so tool is ⅛" above spindle centerline. 3. Adjust for appropriate spindle speed (**Page 35**). 4. Troubleshoot possible causes/solutions in this table.
Excessive vibration upon startup (when workpiece is installed).	1. Workpiece is mounted incorrectly. 2. Workpiece warped, out of round, or flawed. 3. Spindle speed too fast for workpiece. 4. Workpiece hitting stationary object. 5. Headstock, tailstock, or tool rest not securely clamped to lathe bed. 6. Belt pulleys are not properly aligned. 7. Lathe is resting on an uneven surface. 8. Motor mount bolts are loose. 9. Belt is worn or damaged. 10. Spindle bearings are worn or damaged.	1. Remount workpiece, making sure that centers are embedded in true center of workpiece. 2. Cut workpiece to correct, or use a different workpiece. 3. Reduce spindle speed (**Page 35**). 4. Stop lathe and fix interference problem. 5. Check clamp levers and tighten if necessary (**Pages 29–30**). 6. Align belt pulleys (**Page 49**). 7. Shim stand or adjust feet to eliminate wobbles. 8. Tighten motor mount bolts. 9. Replace belt (**Page 48**). 10. Test by rotating shaft; rotational grinding/loose shaft requires bearing replacement.
Chisel grabs or digs into workpiece.	1. Wrong chisel/tool being used. 2. Chisel/tool is too dull. 3. Tool rest height not set correctly. 4. Tool rest is set too far from workpiece.	1. Use correct chisel/tool. 2. Sharpen or replace chisel/tool. 3. Correct tool rest height (**Page 30**). 4. Move tool rest closer to workpiece.
Tailstock moves under load.	1. Tailstock mounting bolt is loose. 2. Bed or clamping surface is excessively oily or greasy.	1. Tighten mounting bolt. 2. Clean bed or clamping surface to remove excess oil/grease.
Spindle lacks turning power or starts up slowly.	1. Belt is slipping. 2. Pulleys loose. 3. Workpiece too heavy for spindle.	1. Tighten/adjust belt (**Page 48**). 2. Tighten pulley set screw; re-align/replace shaft, pulley set screw, and key. 3. Remove excess material before remounting; use lighter workpiece.
Quill will not move forward when handwheel is turned	1. Keyway is not aligned with quill lock lever.	1. Align quill keyway and quill lock lever and slightly tighten lever to engage keyway.

Tensioning/ Replacing Belt

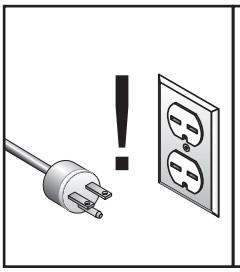

⚠WARNING

To reduce risk of shock or accidental startup, always disconnect machine from power before adjustments, maintenance, or service.

To change/tension belt:

1. DISCONNECT MACHINE FROM POWER!
2. Open front belt access cover (see **Figure 65**).
3. Loosen belt tension lock handle (see **Figure 65**).
4. Use belt tension lever (see **Figure 65**) to lift motor assembly all the way up, then retighten motor tension lock handle—this will hold motor in place while you work.

   Note: *If you are only tensioning the belt, skip to **Step 9**.*

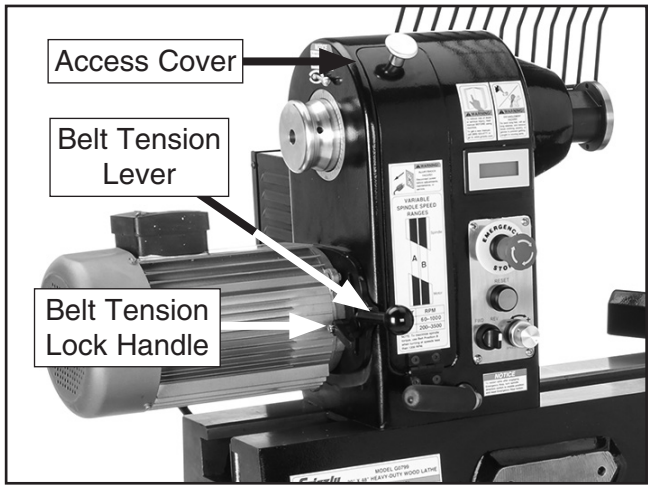

Figure 65. Location of belt tension components.

5. Loosen two M8-1.25 x 20 set screws (see **Figure 66**) that secure handwheel to spindle shaft, then slide handwheel off of shaft.

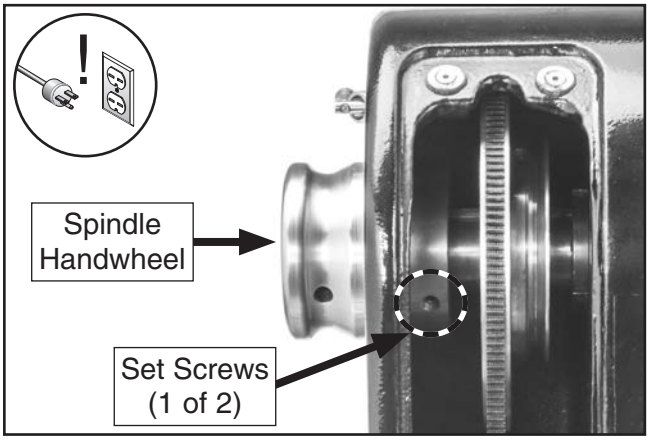

Figure 66. Location of set screws on spindle handwheel.

6. Reach into belt access cavity and roll belt off motor (lower) pulley (see **Figure 67**). Then slide belt off of spindle (upper) pulley.

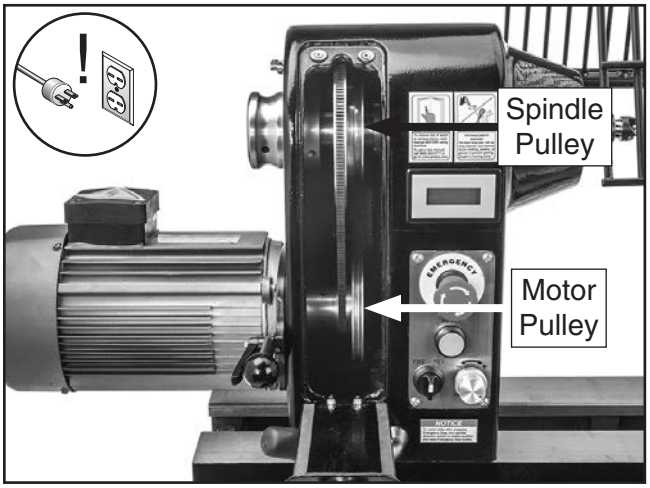

Figure 67. Belt access cover opened.

7. Install new belt by performing **Step 6** in reverse.

8. Re-install spindle handwheel and set screws.

9. Apply downward pressure on belt tension lever to properly tension drive belt, then re-tighten belt tension lock handle.

   Note: *When properly tensioned, belt should deflect about ½" when moderate pressure is applied to belt mid-way between upper and lower pulley, as illustrated in* ***Figure*** **68**.

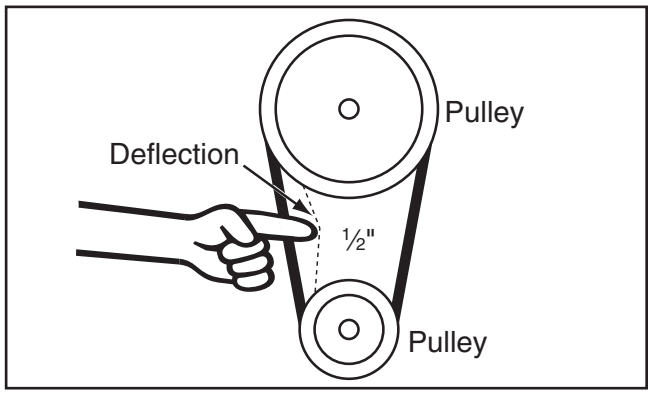

Figure 68. Testing for ½" belt deflection.

10. Ensure belt ribs are fully seated in pulley grooves, then secure front belt access cover.

Aligning Pulleys

The motor and spindle pulleys are aligned at the factory and should not require any adjustment. If they become misaligned over time, it is important that they be re-aligned in order to extend belt life and maximize the transfer of power from the motor to the spindle.

Tool Needed	Qty
Hex Wrench 4mm	1

To align motor and spindle pulleys:

1. DISCONNECT MACHINE FROM POWER!

2. Open belt access cover.

3. Loosen (2) M8-1.25 x 10 set screws on spindle pulley (see **Figure 69**).

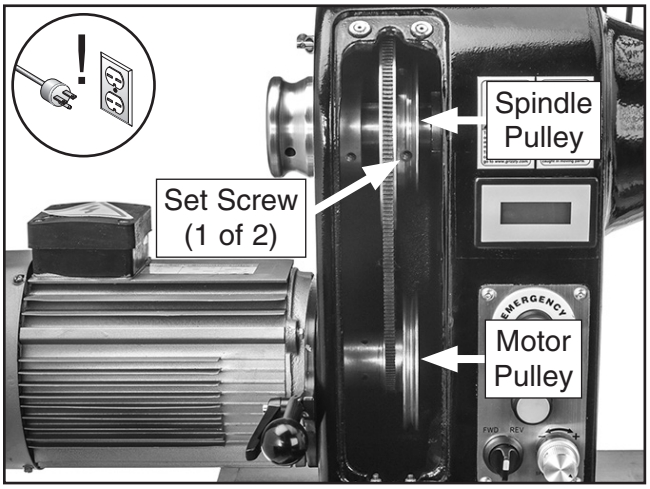

Figure 69. Location of motor and spindle pulleys.

4. Slide spindle pulley into alignment with motor pulley.

   Note: *When pulleys are properly aligned, there should be no unusual or pulsing sounds coming from the belt.*

5. Tighten set screws.

Removing End Play

The spindle bearing is set at the factory and should not require any adjustment. If any play or looseness in the spindle develops over time, the bearing lock nut on the spindle shaft can be carefully tightened to eliminate play.

Tools Needed	Qty
Flat Head Screwdriver #2	1
Dead Blow Hammer	1

To tighten bearing lock nut:

1. DISCONNECT MACHINE FROM POWER!

2. Open belt access cover.

3. Carefully bend back any tabs (see **Figure 70**) on tabbed lock washer.

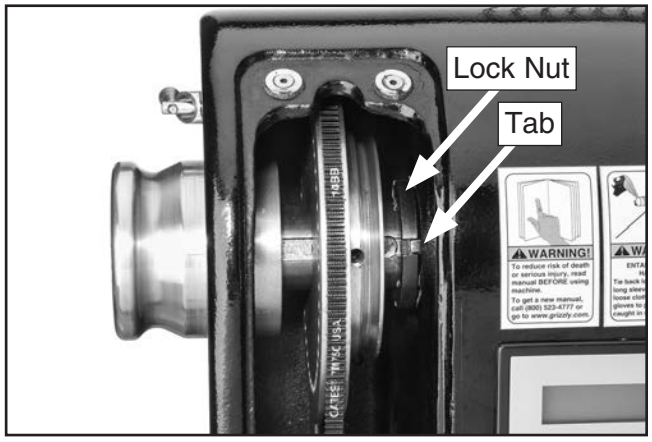

Figure 70. Location of bearing lock nut inside headstock.

4. Position tip of flat head screwdriver against inset on bearing lock nut and tap in clockwise direction. Turn lock nut about 1/16" at a time.

⚠CAUTION

Do not overtighten bearing lock nut or spindle bearings may overheat and damage machine.

5. Once end play has been removed, turn spindle by hand to ensure that it spins freely. If spindle does *not* spin freely, slightly loosen bearing lock nut.

6. When bearing lock nut is properly adjusted, carefully bend tab on tabbed lock washer back into place.

SECTION 8: WIRING

These pages are current at the time of printing. However, in the spirit of improvement, we may make changes to the electrical systems of future machines. Compare the manufacture date of your machine to the one stated in this manual, and study this section carefully.

If there are differences between your machine and what is shown in this section, call Technical Support at (570) 546-9663 for assistance BEFORE making any changes to the wiring on your machine. An updated wiring diagram may be available. **Note:** *Please gather the serial number and manufacture date of your machine before calling. This information can be found on the main machine label.*

⚠WARNING
Wiring Safety Instructions

SHOCK HAZARD. Working on wiring that is connected to a power source is extremely dangerous. Touching electrified parts will result in personal injury including but not limited to severe burns, electrocution, or death. Disconnect the power from the machine before servicing electrical components!

MODIFICATIONS. Modifying the wiring beyond what is shown in the diagram may lead to unpredictable results, including serious injury or fire. This includes the installation of unapproved aftermarket parts.

WIRE CONNECTIONS. All connections must be tight to prevent wires from loosening during machine operation. Double-check all wires disconnected or connected during any wiring task to ensure tight connections.

CIRCUIT REQUIREMENTS. You MUST follow the requirements at the beginning of this manual when connecting your machine to a power source.

WIRE/COMPONENT DAMAGE. Damaged wires or components increase the risk of serious personal injury, fire, or machine damage. If you notice that any wires or components are damaged while performing a wiring task, replace those wires or components.

MOTOR WIRING. The motor wiring shown in these diagrams is current at the time of printing but may not match your machine. If you find this to be the case, use the wiring diagram inside the motor junction box.

CAPACITORS/INVERTERS. Some capacitors and power inverters store an electrical charge for up to 10 minutes after being disconnected from the power source. To reduce the risk of being shocked, wait at least this long before working on capacitors.

EXPERIENCING DIFFICULTIES. If you are experiencing difficulties understanding the information included in this section, contact our Technical Support at (570) 546-9663.

NOTICE

The photos and diagrams included in this section are best viewed in color. You can view these pages in color at www.grizzly.com.

COLOR KEY

BLACK	Bk	BLUE	Bl	YELLOW	Yl	LIGHT BLUE	Lb
WHITE	Wt	BROWN	Br	YELLOW GREEN	Yg	BLUE WHITE	Bw
GREEN	Gn	GRAY	Gy	PURPLE	Pu	TURQUOISE	Tu
RED	Rd	ORANGE	Or	PINK	Pk		

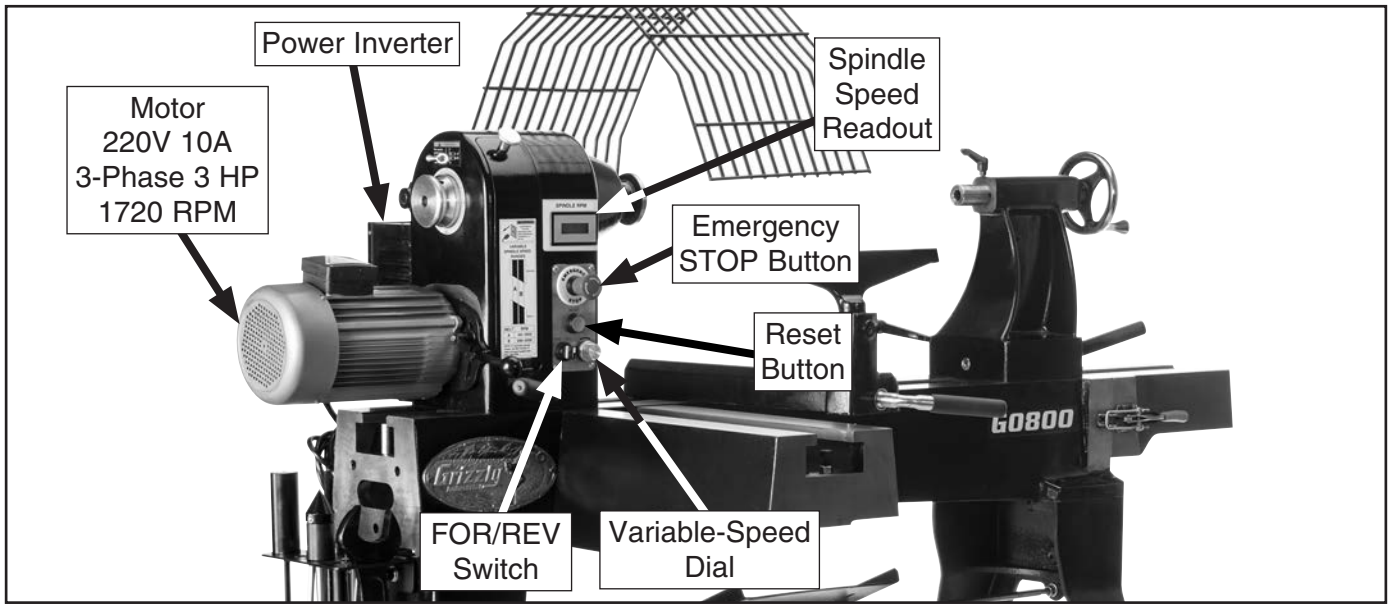

Figure 71. Location of electrical components.

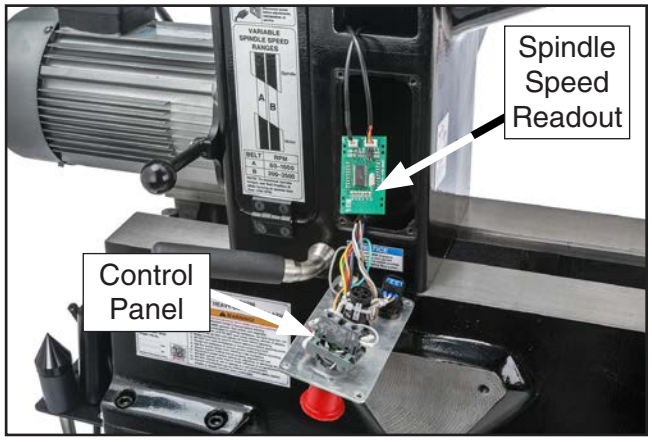

Figure 72. Control panel and DRO readout components.

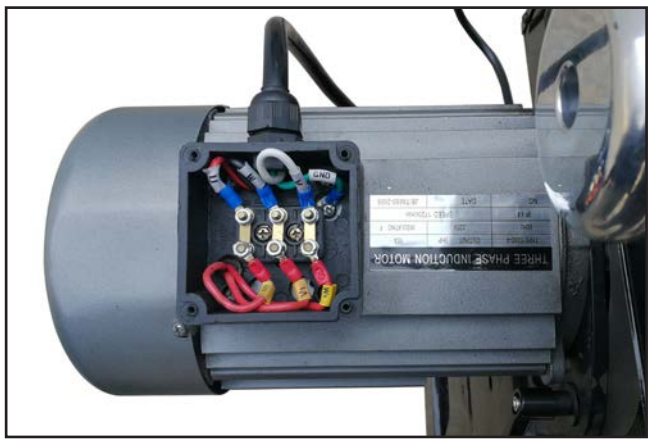

Figure 73. Motor ID label and junction box.

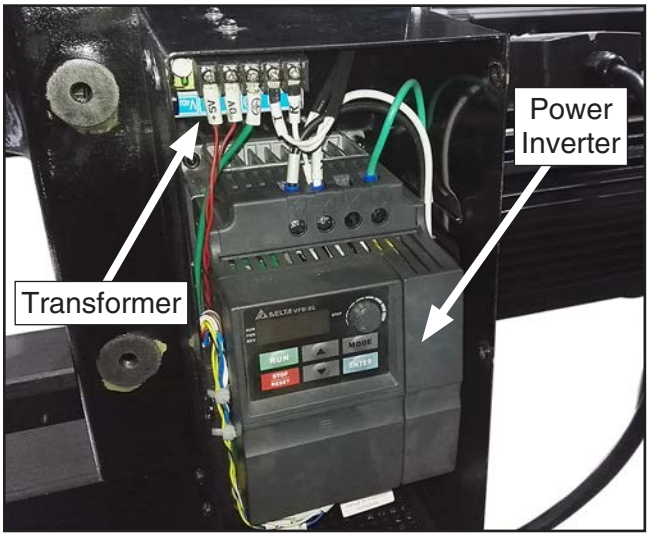

Figure 74. Power inverter electrical box.

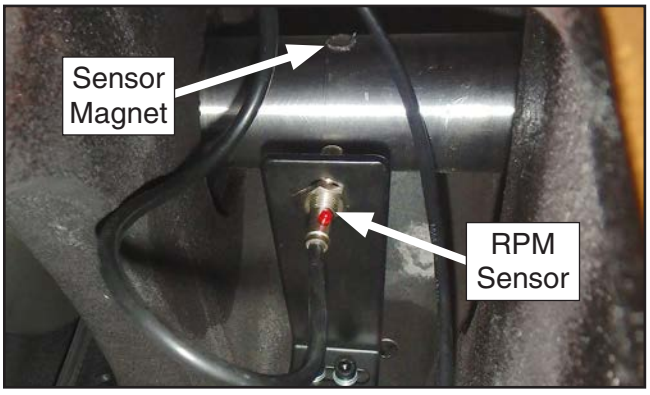

Figure 75. RPM sensor and sensor magnet.

READ ELECTRICAL SAFETY ON PAGE 52!

G0799 & G0800 Wiring Diagram

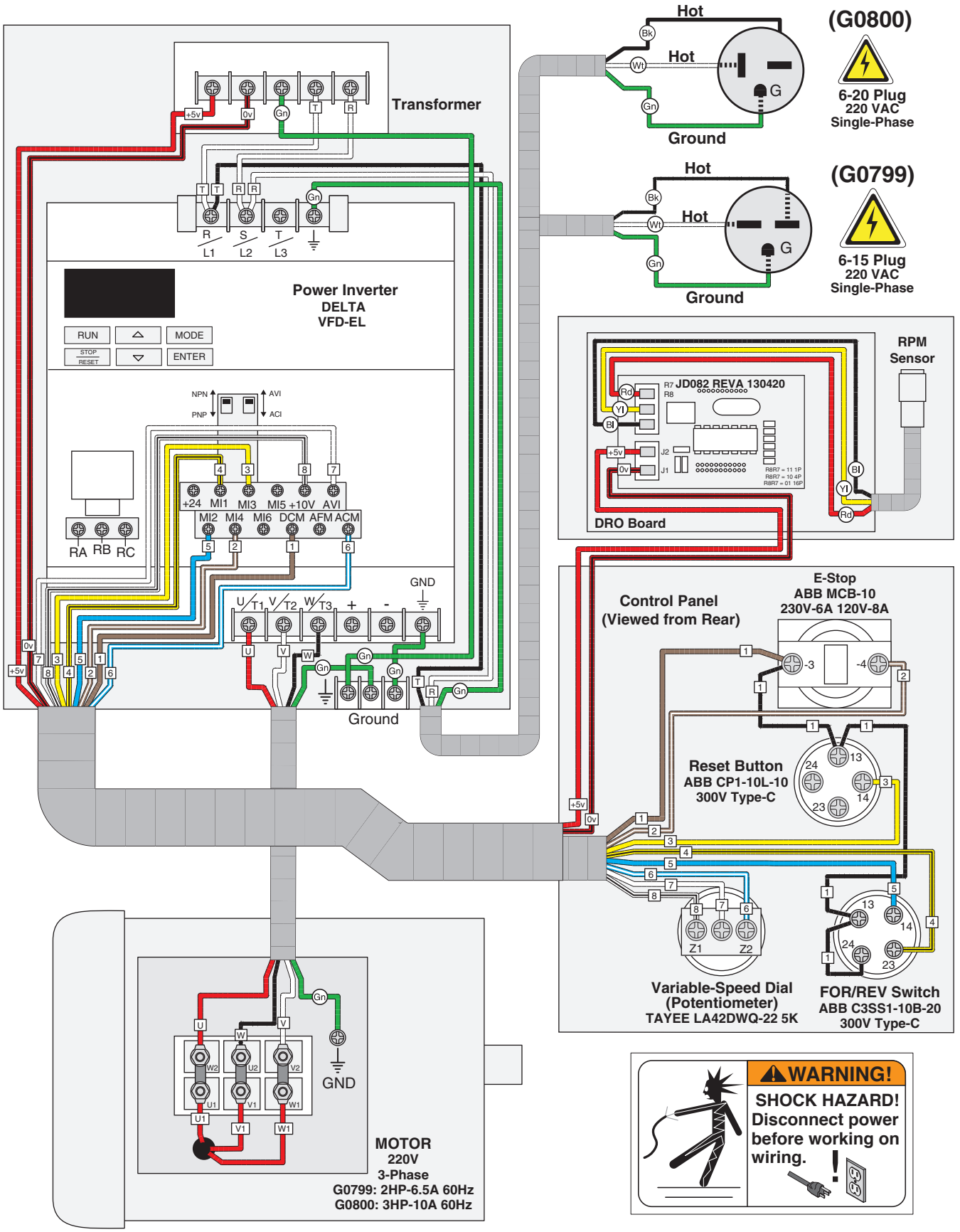

SECTION 9: PARTS

We do our best to stock replacement parts when possible, but we cannot guarantee that all parts shown are available for purchase. Call **(800) 523-4777** or visit **www.grizzly.com/parts** to check for availability.

Main

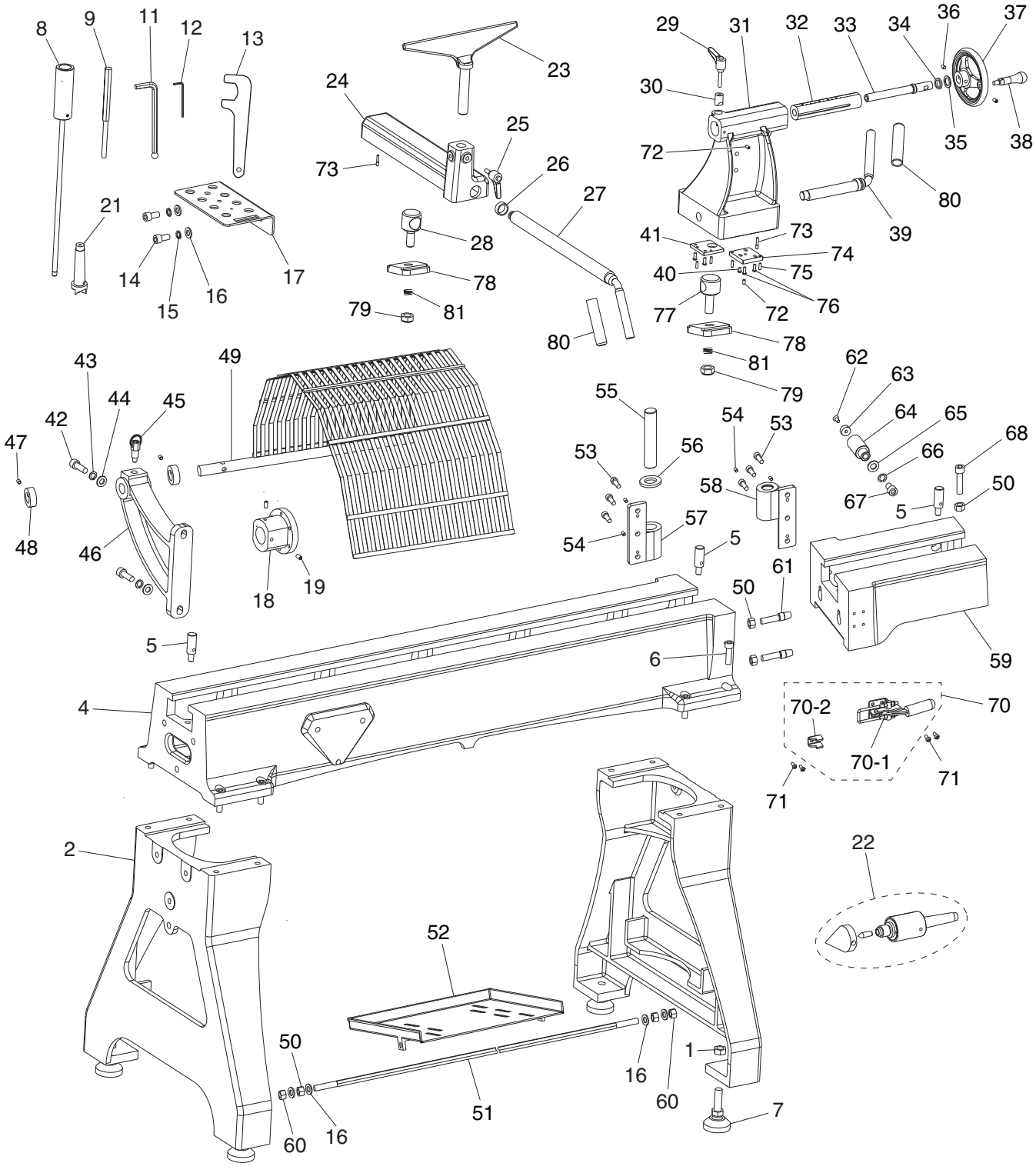

Main Parts List

REF	PART #	DESCRIPTION
1	P0799001	HEX NUT M16-2
2	P0799002	STAND
4	P0799004	BED
5	P0799005	BED STOP M12-1.75 X 20, 66L
6	P0799006	CAP SCREW M12-1.75 X 35
7	P0799007	LEVELING FOOT M16-2 X 65
8	P0799008	KNOCKOUT ROD
9	P0799009	LOCATING ROD
11	P0799011	HEX WRENCH 10MM
12	P0799012	HEX WRENCH 3MM
13	P0799013	WRENCH 50MM OPEN-END
14	P0799014	CAP SCREW M12-1.75 X 20
15	P0799015	LOCK WASHER 12MM
16	P0799016	FLAT WASHER 12MM
17	P0799017	TOOL HOLDER
18	P0799018	FACEPLATE 3”
19	P0799019	SET SCREW M6-1 X 10
21	P0799021	SPUR CENTER MT#2
22	P0799022	LIVE CENTER MT#2
23	P0799023	TOOL REST
24	P0799024	TOOL REST BASE
25	P0799025	ADJUSTABLE HANDLE 80L, M10-1.5 X 25
26	P0799026	BRASS SLEEVE
27	P0799027	TOOL REST LOCK HANDLE
28	P0799028	TOOL REST CLAMP BOLT
29	P0799029	ADJUSTABLE HANDLE 80L, M10-1.5 X 45
30	P0799030	LOCK SLEEVE
31	P0799031	TAILSTOCK (G0799)
31	P0800031	TAILSTOCK (G0800)
32	P0799032	TAILSTOCK QUILL
33	P0799033	LEADSCREW
34	P0799034	SPACER
35	P0799035	PLASTIC WASHER 20 X 31 X 2.5MM
36	P0799036	SET SCREW M8-1.25 X 10
37	P0799037	HANDWHEEL TYPE-3 150D X 20B X M10-1.5
38	P0799038	REVOLVING HANDLE M10-1.5, 28 X 81
39	P0799039	TAILSTOCK LOCK HANDLE
40	P0799040	BUTTON HD CAP SCR M6-1 X 12
41	P0799041	TAILSTOCK MOUNTING BLOCK
42	P0799042	CAP SCREW M10-1.5 X 30
43	P0799043	LOCK WASHER 10MM

REF	PART #	DESCRIPTION
44	P0799044	FLAT WASHER 10MM
45	P0799045	SPRING PIN BOLT M12-1.75 X 18, 8 X 8
46	P0799046	CHUCK GUARD MOUNTING ARM (G0799)
46	P0800046	CHUCK GUARD MOUNTING ARM (G0800)
47	P0799047	SET SCREW M6-1 X 8
48	P0799048	CHUCK GUARD LOCK COLLAR
49	P0799049	CHUCK GUARD (G0799)
49	P0800049	CHUCK GUARD (G0800)
50	P0799050	HEX NUT M12-1.75
51	P0799051	CHISEL PAN MOUNTING ROD
52	P0799052	CHISEL PAN
53	P0799053	CAP SCREW M8-1.25 X 25
54	P0799054	SET SCREW M6-1 X 10
55	P0799055	SWING-AWAY HINGE PIN
56	P0799056	SPACER (BRASS)
57	P0799057	SWING-AWAY HINGE (LOWER)
58	P0799058	SWING-AWAY HINGE (UPPER)
59	P0799059	SWING-AWAY BED EXTENSION
60	P0799060	LOCK NUT M12-1.75
61	P0799061	ECCENTRIC BOLT M12-1.75 X 35
62	P0799062	CAP SCREW M6-1 X 16
63	P0799063	MAGNET 6 X 20 X 10
64	P0799064	SWING-AWAY BED STOP SHAFT
65	P0799065	FLAT WASHER 12MM
66	P0799066	LOCK WASHER 12MM
67	P0799067	CAP SCREW M12-1.75 X 20
68	P0799068	CAP SCREW M12-1.75 X 40
70	P0799070	TOGGLE CLAMP ASSEMBLY
70-1	P0799070-1	TOGGLE CLAMP LATCH
70-2	P0799070-2	TOGGLE CLAMP LATCH PLATE
71	P0799071	BUTTON HD CAP SCR M6-1 X 12
72	P0799072	SET SCREW M6-1 X 10
73	P0799073	POSITIONING PIN M6-1 X 12, 30L
74	P0799074	MOUNTING BLOCK
75	P0799075	TAPER PIN 6 X 20
76	P0799076	BUTTON HD CAP SCR M6-1 X 16
77	P0799077	CLAMP BOLT
78	P0799078	CLAMP BLOCK
79	P0799079	LOCK NUT M20-2.5
80	P0799080	HANDLE GRIP 22ID X 120L X 3T (RUBBER)
81	P0799081	COMPRESSION SPRING 1.4 X 25.8 X 12

Headstock

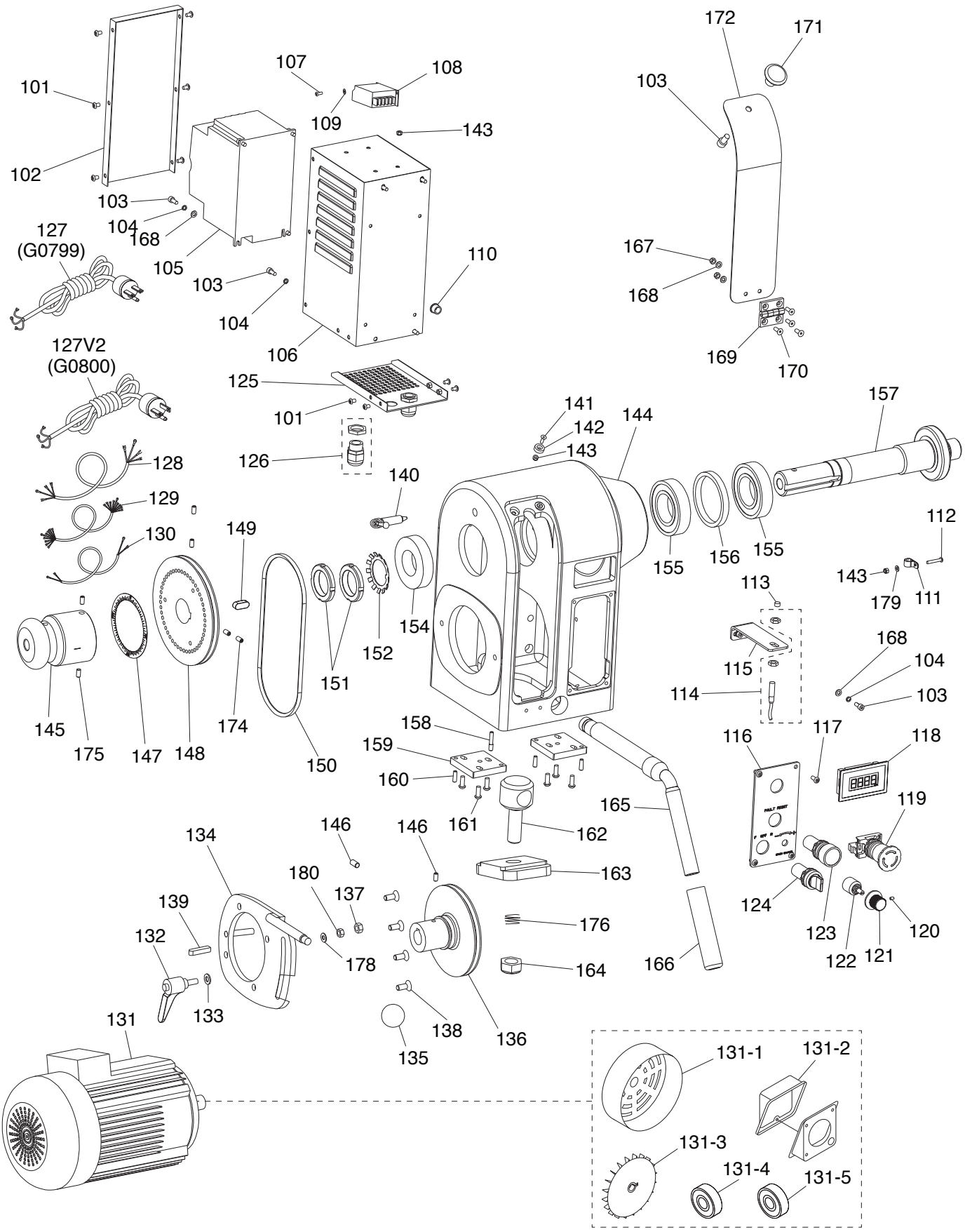

101
102
103
104
168
105
107
108
109
143
110
106
127
(G0799)
127V2
(G0800)
125
126
128
129
130
149
140
141
142
144
155
156
157
112
111
179
113
115
114
168
104
103
145
175
147
148
174
150
151
152
154
158
159
160
161
162
165
116
117
118
119
124
123
122
121
120
134
146
180
137
139
132
133
178
163
176
164
166
131
135
138
136
131-1
131-2
131-3
131-4
131-5
172
171
167
169
170

Headstock Parts List

REF	PART #	DESCRIPTION
101	P0799101	BUTTON HD CAP SCR M5-.8 X 8
102	P0799102	INVERTER BOX COVER
103	P0799103	CAP SCREW M5-.8 X 12
104	P0799104	LOCK WASHER 5MM
105	P0799105	INVERTER DELTA VFD-EL 240V (G0799)
105	P0800105	INVERTER DELTA VFD-EL 240V (G0800)
106	P0799106	INVERTER BOX
107	P0799107	CAP SCREW M3-.5 X 5
108	P0799108	DRO POWER SUPPLY 5VDC
109	P0799109	FLAT WASHER 3MM
110	P0799110	PLASTIC GROMMET 15MM
111	P0799111	CABLE CLAMP 3/8"
112	P0799112	BUTTON HD CAP SCR M4-.7 X 25
113	P0799113	MAGNET 8 X 5
114	P0799114	DRO SENSOR
115	P0799115	SENSOR BRACKET
116	P0799116	CONTROL PANEL PLATE
117	P0799117	BUTTON HD CAP SCR M5-.8 X 12
118	P0799118	DIGITAL READOUT, RPM
119	P0799119	E-STOP BUTTON ABB MCB-10 22MM
120	P0799120	SET SCREW M4-.7 X 6
121	P0799121	SPEED CONTROL KNOB
122	P0799122	POTENTIOMETER TAYEE LA42DWQ 22MM
123	P0799123	RESET BUTTON ABB CP1-10L-10 22MM
124	P0799124	ROTARY SWITCH ABB C3SS1-10B-20 22MM
125	P0799125	INVERTER BOX BOTTOM
126	P0799126	STRAIN RELIEF PG13.5 TYPE-3
127	P0799127	POWER CORD 12G 3W 72" 6-15P (G0799)
127V2	P0800127V2	POWER CORD 12G 3W 72" 6-20P V2.11.17 (G0800)
128	P0799128	MOTOR CORD 12G 4W 18"
129	P0799129	CONTROL PANEL CORD 9W 21G 18"
130	P0799130	DRO CORD 18G 2W 18"
131	P0799131	MOTOR 2HP 220V 3-PH (G0799)
131	P0800131	MOTOR 3HP 220V 3-PH (G0800)
131-1	P0799131-1	MOTOR FAN COVER
131-2	P0799131-2	MOTOR JUNCTION BOX
131-3	P0799131-3	MOTOR FAN
131-4	P0799131-4	BALL BEARING 6205ZZ (FRONT)
131-5	P0799131-5	BALL BEARING 6203ZZ (REAR)
132	P0799132	ADJUSTABLE HANDLE M10-1.5 X 20
133	P0799133	FLAT WASHER 10MM
134	P0799134	MOTOR MOUNT PLATE
135	P0799135	ROUND KNOB M10-1.5, 32 OD (PLASTIC)
136	P0799136	MOTOR PULLEY

REF	PART #	DESCRIPTION
137	P0799137	LOCK NUT M8-1.25
138	P0799138	FLAT HD CAP SCR M8-1.25 X 20
139	P0799139	KEY 8 X 7 X 40
140	P0799140	SPINDLE LOCK PIN
141	P0799141	FLAT HD CAP SCR M4-.7 X 12
142	P0799142	MAGNET 4 X 15 X 5
143	P0799143	LOCK NUT M4-.7
144	P0799144	HEADSTOCK CASTING (G0799)
144	P0800144	HEADSTOCK CASTING (G0800)
145	P0799145	SPINDLE HANDWHEEL
146	P0799146	SET SCREW M6-1 X 12
147	P0799147	DEGREE SCALE
148	P0799148	SPINDLE PULLEY
149	P0799149	KEY 10 X 10 X 25
150	P0799150	MOTOR BELT 7M650 (G0799)
150	P0800150	MOTOR BELT 7M750 (G0800)
151	P0799151	SPANNER NUT M40-1.5
152	P0799152	TABBED WASHER 40MM
154	P0799154	BALL BEARING 6208-2RS
155	P0799155	BALL BEARING 6209-2RS
156	P0799156	SPACER
157	P0799157	SPINDLE MT#2
158	P0799158	POSITIONING PIN M6-1 X 12, 30L
159	P0799159	MOUNTING BLOCK
160	P0799160	TAPER PIN 6 X 20
161	P0799161	BUTTON HD CAP SCR M6-1 X 16
162	P0799162	CLAMP BOLT
163	P0799163	CLAMP BLOCK
164	P0799164	LOCK NUT M20-2.5
165	P0799165	HEADSTOCK LOCK HANDLE 22 X 135
166	P0799166	HANDLE GRIP 22ID X 120L X 3T (RUBBER)
167	P0799167	LOCK NUT M5-.8
168	P0799168	FLAT WASHER 5MM
169	P0799169	HINGE
170	P0799170	FLAT HD CAP SCR M5-.8 X 16
171	P0799171	KNOB M8-1.25, 36 OD X 26L
172	P0799172	BELT COVER (G0799)
172	P0800172	BELT COVER (G0800)
174	P0799174	SET SCREW M6-1 X 6
175	P0799175	SET SCREW M8-1.25 X 20 DOG-PT
176	P0799176	COMPRESSION SPRING 1.4 X 25.8 X 12
178	P0799178	FLAT WASHER 8MM
179	P0799179	FLAT WASHER 4MM
180	P0799180	HEX NUT M8-1.25

Labels

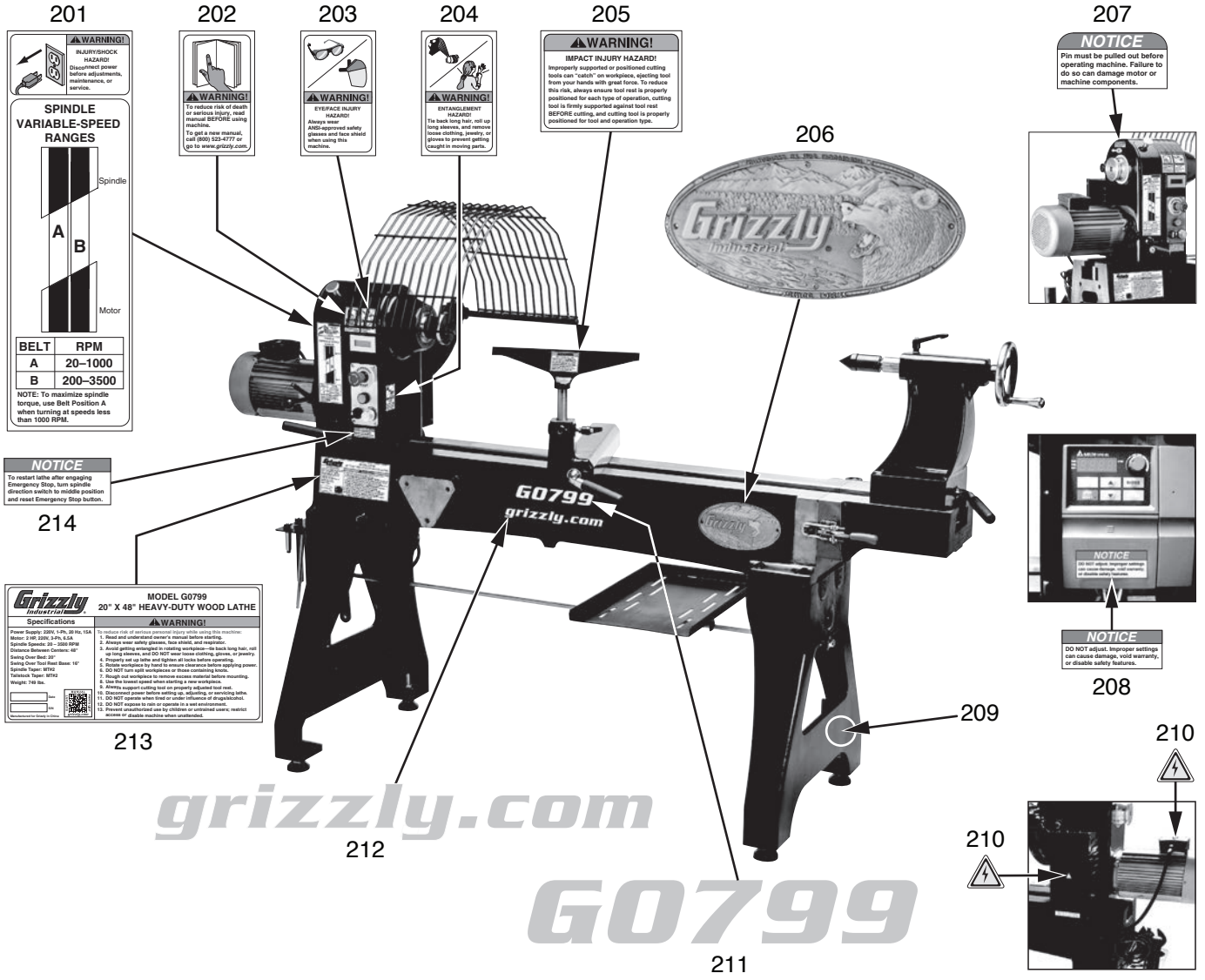

REF	PART #	DESCRIPTION
201	P0799201	SPINDLE SPEED RANGE LABEL
202	P0799202	READ MANUAL LABEL
203	P0799203	EYE/FACE INJURY HAZARD LABEL
204	P0799204	ENTANGLEMENT HAZARD LABEL
205	P0799205	IMPACT INJURY HAZARD LABEL
206	P0799206	GRIZZLY NAMEPLATE
207	P0799207	SPINDLE PIN NOTICE
208	P0799208	DO NOT ADJUST VFD NOTICE

REF	PART #	DESCRIPTION
209	P0799209	TOUCH-UP PAINT, GLOSSY BLACK
210	P0799210	ELECTRICITY LABEL
211	P0799211	MODEL NUMBER LABEL (G0799)
211	P0800211	MODEL NUMBER LABEL (G0800)
212	P0799212	GRIZZLY.COM LABEL
213	P0799213	MACHINE ID LABEL (G0799)
213	P0800213	MACHINE ID LABEL (G0800)
214	P0799214	RESTART LATHE NOTICE

⚠WARNING

Safety labels help reduce the risk of serious injury caused by machine hazards. If any label comes off or becomes unreadable, the owner of this machine MUST replace it in the original location before resuming operations. For replacements, contact (800) 523-4777 or www.grizzly.com.

Grizzly Industrial, Inc. WARRANTY CARD

Name _____

Street _____

City _____ State _____ Zip _____

Phone # _____ Email _____

Model # _____ Order # _____ Serial # _____

The following information is given on a voluntary basis. It will be used for marketing purposes to help us develop better products and services. ***Of course, all information is strictly confidential.***

1. How did you learn about us?

____ Advertisement ____ Friend ____ Catalog
____ Card Deck ____ Website ____ Other:

2. Which of the following magazines do you subscribe to?

____ Cabinetmaker & FDM
____ Family Handyman
____ Hand Loader
____ Handy
____ Home Shop Machinist
____ Journal of Light Cont.
____ Live Steam
____ Model Airplane News
____ Old House Journal
____ Popular Mechanics
____ Popular Science
____ Popular Woodworking
____ Precision Shooter
____ Projects in Metal
____ RC Modeler
____ Rifle
____ Shop Notes
____ Shotgun News
____ Today's Homeowner
____ Wood
____ Wooden Boat
____ Woodshop News
____ Woodsmith
____ Woodwork
____ Woodworker West
____ Woodworker's Journal
____ Other:

3. What is your annual household income?

____ $20,000-$29,000 ____ $30,000-$39,000 ____ $40,000-$49,000
____ $50,000-$59,000 ____ $60,000-$69,000 ____ $70,000+

4. What is your age group?

____ 20-29 ____ 30-39 ____ 40-49
____ 50-59 ____ 60-69 ____ 70+

5. How long have you been a woodworker/metalworker?

____ 0-2 Years ____ 2-8 Years ____ 8-20 Years ____ 20+ Years

6. How many of your machines or tools are Grizzly?

____ 0-2 ____ 3-5 ____ 6-9 ____ 10+

7. Do you think your machine represents a good value? _____Yes _____No

8. Would you recommend Grizzly Industrial to a friend? _____Yes _____No

9. Would you allow us to use your name as a reference for Grizzly customers in your area?
Note: *We never use names more than 3 times.* _____Yes _____No

10. Comments: _____

_____

_____

_____

CUT ALONG DOTTED LINE

FOLD ALONG DOTTED LINE

Place
Stamp
Here

GRIZZLY INDUSTRIAL, INC.
P.O. BOX 2069
BELLINGHAM, WA 98227-2069

FOLD ALONG DOTTED LINE

Send a Grizzly Catalog to a friend:

Name_____

Street_____

City_____State_____Zip_____

TAPE ALONG EDGES--PLEASE DO NOT STAPLE

WARRANTY & RETURNS

Grizzly Industrial, Inc. warrants every product it sells for a period of **1 year** to the original purchaser from the date of purchase. This warranty does not apply to defects due directly or indirectly to misuse, abuse, negligence, accidents, repairs or alterations or lack of maintenance. This is Grizzly's sole written warranty and any and all warranties that may be implied by law, including any merchantability or fitness, for any particular purpose, are hereby limited to the duration of this written warranty. We do not warrant or represent that the merchandise complies with the provisions of any law or acts unless the manufacturer so warrants. In no event shall Grizzly's liability under this warranty exceed the purchase price paid for the product and any legal actions brought against Grizzly shall be tried in the State of Washington, County of Whatcom.

We shall in no event be liable for death, injuries to persons or property or for incidental, contingent, special, or consequential damages arising from the use of our products.

To take advantage of this warranty, contact us by mail or phone and give us all the details. We will then issue you a "Return Number,'' which must be clearly posted on the outside as well as the inside of the carton. We will not accept any item back without this number. Proof of purchase must accompany the merchandise.

The manufacturers reserve the right to change specifications at any time because they constantly strive to achieve better quality equipment. We make every effort to ensure that our products meet high quality and durability standards and we hope you never need to use this warranty.

Please feel free to write or call us if you have any questions about the machine or the manual.

Thank you again for your business and continued support. We hope to serve you again soon.

grizzly.com®

TOOL WEBSITE

Buy Direct and Save with Grizzly® – Trusted, Proven and a Great Value!

~Since 1983~

Visit Our Website Today For Current Specials!

ORDER

24 HOURS A DAY!

1-800-523-4777