TURN-NADO® GEARHEAD LATHE w/DRO

MODEL SB1046PF 21" X 60"
MODEL SB1047F 21" X 80"
MODEL SB1048PF 21" X 120"
MODEL SB1056F 18" X 40"
MODEL SB1057F 18" X 60"
MODEL SB1058F 18" X 80"

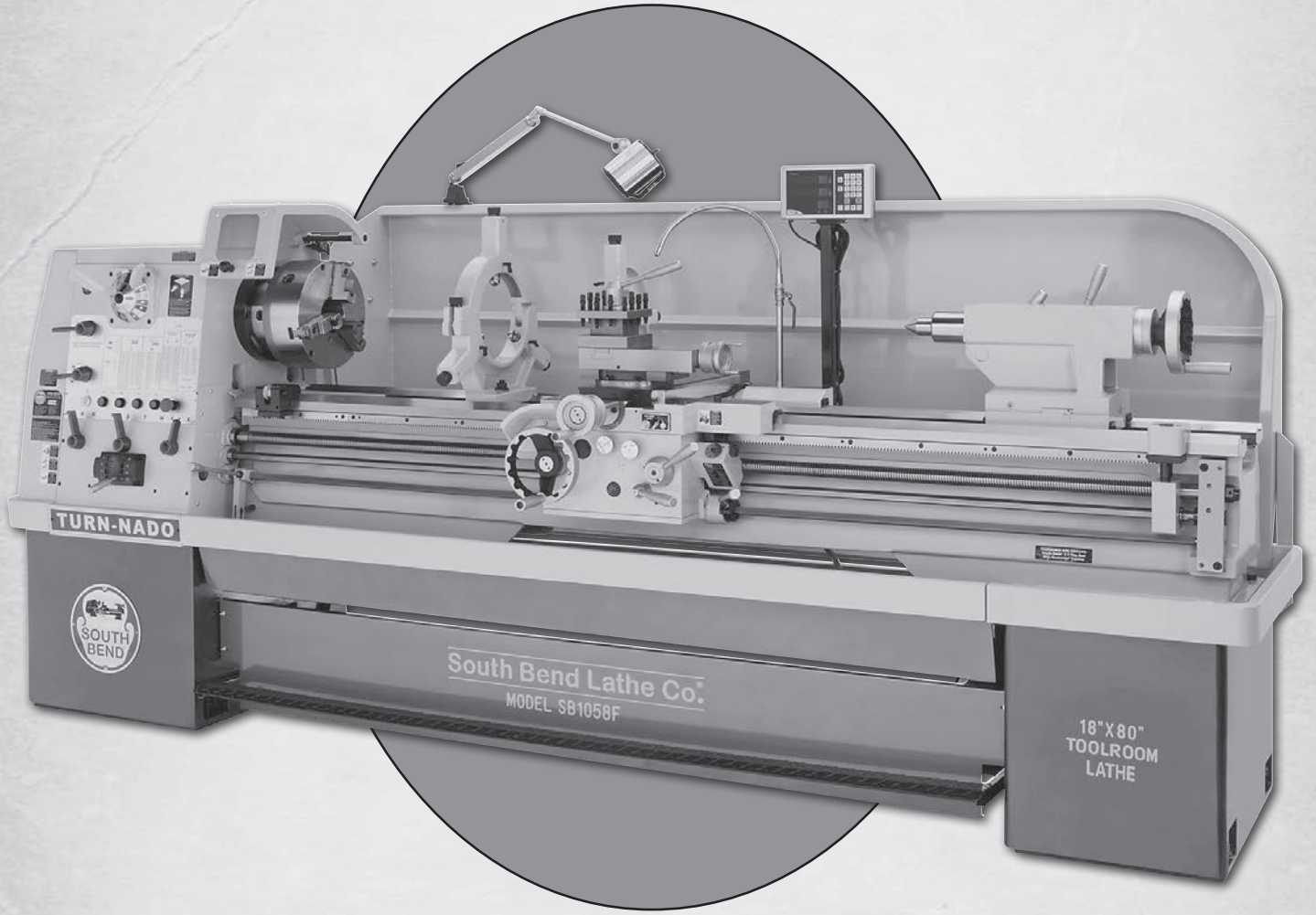

OWNER'S MANUAL

South Bend Lathe Co.®

Hundreds of Thousands of Lathes Sold With a Tradition of Quality Since 1906!

© August, 2011 by South Bend Lathe Co. Revised March, 2014 (ST).

For Machines Mfg. Since 2/14

Scope of Manual

This manual helps the reader understand the machine, how to prepare it for operation, how to control it during operation, and how to keep it in good working condition. We assume the reader has a basic understanding of how to operate this type of machine, but that the reader is not familiar with the controls and adjustments of this specific model. As with all machinery of this nature, learning the nuances of operation is a process that happens through training and experience. If you are not an experienced operator of this type of machinery, read through this entire manual, then learn more from an experienced operator, schooling, or research before attempting operations. Following this advice will help you avoid serious personal injury and get the best results from your work.

Manual Feedback

We've made every effort to be accurate when documenting this machine. However, errors sometimes happen or the machine design changes after the documentation process—so the manual may not exactly match your machine. If a difference between the manual and machine leaves you in doubt, contact our customer service for clarification.

We highly value customer feedback on our manuals. If you have a moment, please share your experience using this manual. What did you like about it? Is there anything you would change to make it better? Did it meet your expectations for clarity, professionalism, and ease-of-use?

South Bend Lathe, Inc.
c/o Technical Documentation Manager
P.O. Box 2027
Bellingham, WA 98227
Email: manuals@southbendlathe.com

Updates

For your convenience, any updates to this manual will be available to download free of charge through our website at:

www.southbendlathe.com

Customer Service

We stand behind our machines. If you have any service questions, parts requests or general questions about your purchase, feel free to contact us.

South Bend Lathe Co.
P.O. Box 2027
Bellingham, WA 98227
Phone: (360) 734-1540
Fax: (360) 676-1075 (International)
Fax: (360) 734-1639 (USA Only)
Email: sales@southbendlathe.com

Table of Contents

INTRODUCTION 3
About This Machine 3
Foreword 3
Capabilities 3
Features 3
General Identification 4
Controls & Components 5
Master Power Switch 5
Headstock 5
Control Panel 6
Carriage 6
Carriage Feed Clutch Knob 7
Tailstock 7
Safety Foot Brake 8
SB1046PF, SB1047F, SB1048PF 9
Product Specifications 13
SB1056F, SB1057F, SB1058F 13

SAFETY 17
Understanding Risks of Machinery 17
Basic Machine Safety 17
Additional Metal Lathe Safety 19
Additional Chuck Safety 20

PREPARATION 21
Preparation Overview 21
Things You'll Need 21
Power Supply Requirements 22
Availability 22
Full-Load Current Rating 22
Circuit Requirements 22
Grounding Requirements 23
Unpacking 24
Inventory 24
Cleaning & Protecting 25
Physical Environment 26
Electrical Installation 26
Lighting 26
Weight Load 26
Space Allocation 26
Lifting & Moving 27
Leveling & Mounting 28
Leveling 28
Bolting to Concrete Floors 29
Assembly 29
Lubricating Lathe 30
Adding Coolant 30
Power Connection 30
Test Run 32
Spindle Break-In 35
Recommended Adjustments 35

OPERATION 36
Operation Overview 36
Chuck & Faceplate Mounting 37
Installation & Removal Devices 37
Chuck Installation 38
Registration Marks 39
Chuck Removal 39
Scroll Chuck Clamping 40
4-Jaw Chuck 40
Mounting Workpiece 40
Faceplate 41
Tailstock 42
Positioning Tailstock 42
Using Quill 42
Installing Tooling 43
Removing Tooling 44
Offsetting Tailstock 44
Aligning Tailstock to Spindle Centerline 45
Centers 46
Dead Centers 46
Live Centers 47
Mounting Dead Center in Spindle 47
Removing Center from Spindle 47
Mounting Center in Tailstock 47
Removing Center from Tailstock 48
Mounting Workpiece Between Centers 48
Steady Rest 49
Follow Rest 50
Carriage & Compound Rest Locks 50
Compound Rest 50
Four-Way Tool Post 51
Installing Tool 51
Aligning Cutting Tool with Spindle Centerline 51
Micrometer Stop 52
Manual Feed 53
Carriage Handwheel 53
Cross Slide Handwheel 53
Compound Rest Handwheel 53
Spindle Speed 53
Determining Spindle Speed 53
Setting Spindle Speed 54

Power Feed 54
Power Feed Controls 55
Setting Power Feed Rate 57
End Gears 58
Standard End Gear Configuration 58
Alternate End Gear Configuration 58
Threading Controls 59
Headstock & Gearbox Threading Controls 59
Apron Controls 60
Thread Dial 61
Thread Dial Chart 61
Chip Drawer 63
Coolant System 63
Rod Support 64

ACCESSORIES 65

MAINTENANCE 66
Maintenance Schedule 66
Cleaning & Protecting 66
Maintenance Chart 67
Lubrication 68
Headstock 68
Quick-Change Gearbox 69
Apron 70
One-Shot Oiler 71
Longitudinal Leadscrew 72
Ball Oilers 72
End Gears 73
Coolant System Service 74
Hazards 74
Adding Fluid 75
Changing Coolant 75
Machine Storage 76

SERVICE 77
Backlash Adjustment 77
Compound Rest 77
Cross Slide 77
Leadscrew End Play Adjustment 78
Gib Adjustment 78
Half Nut Adjustment 80
V-Belts 80
Spindle Clutch Adjustment 81
Leadscrew Shear Pin Replacement 84
Gap Insert Removal & Installation 86
Gap Removal 86
Gap Installation 87

TROUBLESHOOTING 88

ELECTRICAL 91
Electrical Safety Instructions 91
Correcting Phase Polarity 92
Wiring Overview 93
Component Location Index 94
Electrical Cabinet Wiring 95
Spindle Motor 97
Coolant Pump 97
Control Panel 98
Additional Components 99
Power Supply Connection 99

PARTS 100
Headstock Housing 100
Headstock Gears 103
Gearbox 107
End Gears 115
Motor & Headstock Oil System 116
Saddle & Cross Slide 118
Tool Post & Compound Rest 121
Bed & Shafts 122
Stands & Panels
(SB1046PF-47PF, SB1056F-58F) 124
Stand & Panels (SB1048PF) 126
Brake 128
Tailstock 129
Thread Dial 130
Micrometer Stop 130
Steady Rest 131
Follow Rest 131
Electrical Cabinet & Control Panel 132
Accessories 133
Front Machine Labels 134
Rear Machine Labels 135

WARRANTY 137

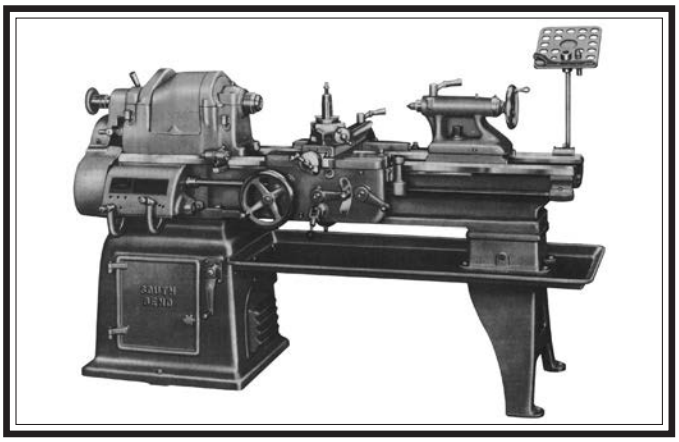

16" South Bend Precision Toolroom Lathe
(*Circa 1958*)

About This Machine

Foreword

"*The screw cutting engine lathe is the oldest and most important of machine tools and from it all other machine tools have been developed. It was the lathe that made possible the building of the steamboat, the locomotive, the electric motor, the automobile and all kinds of machinery used in industry. Without the lathe our great industrial progress of the last century would have been impossible.*" —**How To Run a Lathe**, 15th Edition, South Bend Lathe.

The lathe represented in this manual is a modern day version of the screw cutting lathes that trace their roots back to the 1700's, which were themselves technological improvements of the bow lathe that can be traced back thousands of years to the ancient Egyptians.

Now, almost 300 years later, these modern "screw cutting" lathes are not just a piece of refined machinery, but a culmination of human ingenuity and knowledge embodied into the design and synergy of thousands of interworking parts—some of which represent the life's work and dreams of many inventors, mechanical engineers, and world-class machinists—including the likes of Leonardo da Vinci, Henry Maudsley, and the founders of South Bend Lathe, John and Miles O'Brien.

And now the torch is passed to you—to take the oldest and most important type of machine tool—and carry on the tradition. As the operator of a South Bend Lathe, you now join the ranks of some very famous and important customers, such as Henry Ford, who used the machines he purchased to help him change the world.

Capabilities

These Turn-Nado® Gearhead Lathes are built for daily use in a busy industrial setting. Loaded with many nice features and high-precision parts, these lathes excel at making fine tools, dies, thread gauges, jigs, and precision test gauges—however, they are by no means delicate. Thick castings, heavy weight, and quality construction throughout provide the necessary brawn for demanding production and manufacturing tasks.

Features

These 16-Speed Gearhead Lathes are packed with standard features and equipment, such as a complete coolant system, easy-to-clean chip drawer, one-shot way lubrication system, included steady and follow rests, chuck guard, adjustable work lamp, foot brake, powered cross feed, 3- and 4-jaw chucks, faceplate, and premium Allen-Bradley contactors, thermal relays, and fuse system.

Spindle speeds are controlled by convenient headstock levers, which allow the operator to quickly set the spindle speed within the available range of 20–1600 RPM.

The beds of these lathes are constructed with Meehanite castings that are hardened and precision-ground in the traditional three V-way prismatic design—long used on South Bend Lathes for its accuracy, durability, and rigidity.

The headstocks feature quick-change gear levers and the carriages include an adjustable clutch that disables automatic carriage feed when it contacts the included feed stop or in the event of a crash.

These lathes feature a spindle clutch that allows the operator to switch between forward and reverse without shutting down the motor—a great time saver.

To further ensure a high degree of accuracy, these lathes are equipped with high-quality German spindle bearings and a Fagor 2-Axis DRO. The spindles are D1-8 camlock with an MT#7 taper and 3.15" bore. The tailstocks have an MT#5 taper and 6.5" of quill travel.

General Identification

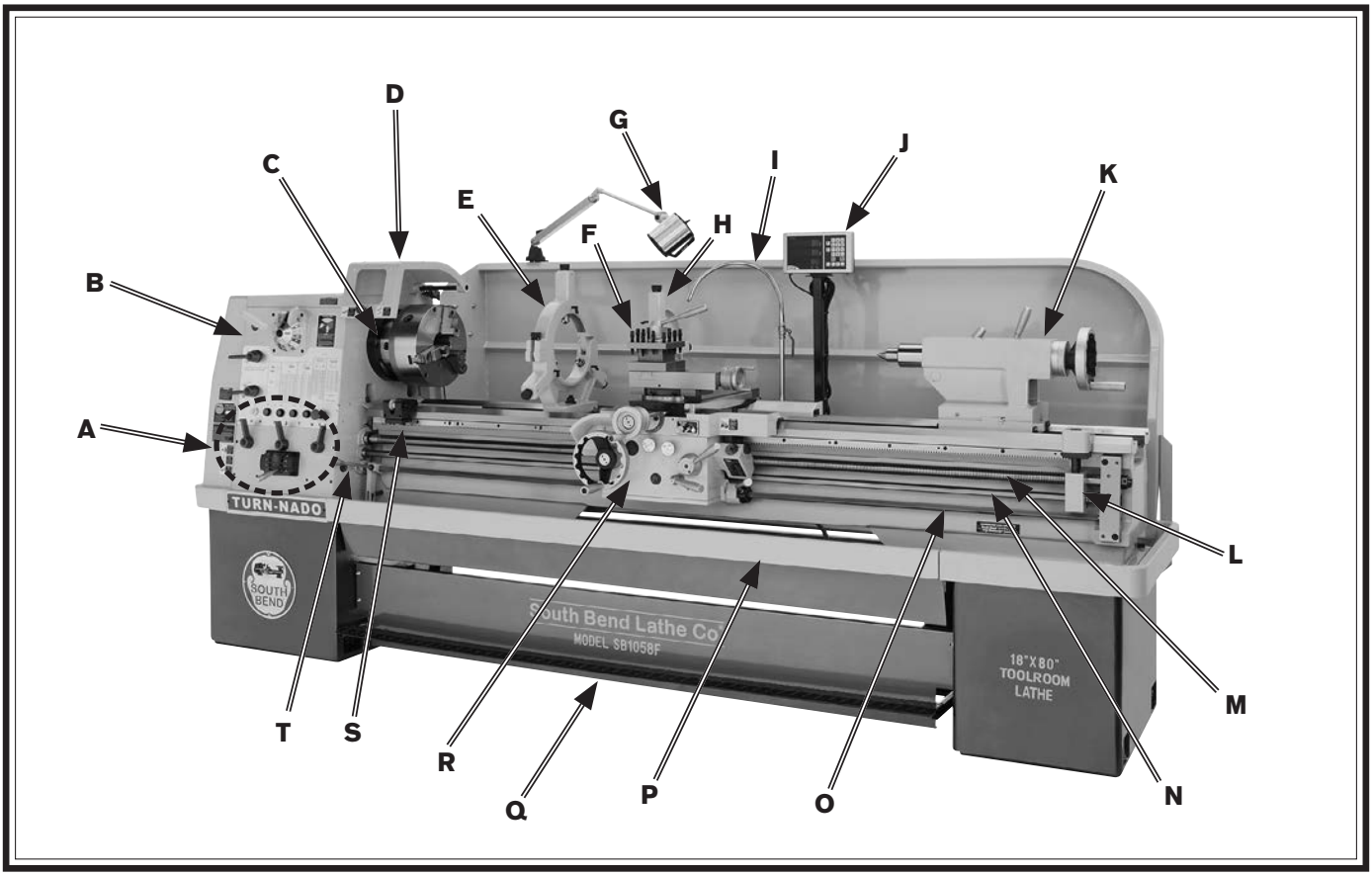

Figure 1. General identification (Model SB1058F shown).

A. Quick-Change Gearbox Controls
B. Headstock Controls
C. D1-8 Camlock MT#7 Spindle
D. Chuck Guard w/Safety Switch
E. Follow Rest
F. 4-Way Tool Post
G. Halogen Work Lamp
H. Steady Rest
I. Coolant Nozzle & Valve
J. Fagor DRO Control Panel
K. Tailstock w/MT#5 Quill
L. Rod Support (SB1047F, -48PF, -58F only)
M. Leadscrew
N. Feed Rod
O. Spindle Rod
P. Chip Drawer
Q. Safety Foot Brake
R. Carriage
S. Micrometer Stop
T. Headstock Spindle Lever

⚠WARNING

Serious personal injury could occur if you connect the machine to power before completing the setup process. DO NOT connect power until instructed to do so later in this manual.

⚠WARNING

Untrained users have an increased risk of seriously injuring themselves with this machine. Do not operate this machine until you have understood this entire manual and received proper training.

Controls & Components

Refer to **Figures 2–9** and the following descriptions to become familiar with the features and basic controls of this lathe. This knowledge will be necessary to properly set up the lathe for the test run and spindle break-in.

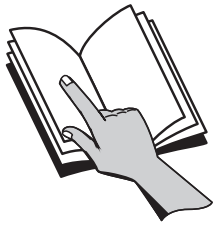

⚠WARNING

To reduce the risk of serious injury when using this machine, read and understand this entire manual before beginning any lathe operations.

Master Power Switch

The rotary switch shown in **Figure 2** toggles incoming power ON and OFF to the lathe controls. It also prevents the electrical cabinet door from being opened when the switch is ***ON***.

Figure 2. Location of the master power switch.

NOTICE

Turning the master power switch to OFF is not a safe alternative to completely disconnecting the machine from power when wiring, servicing, or making repairs.

Headstock

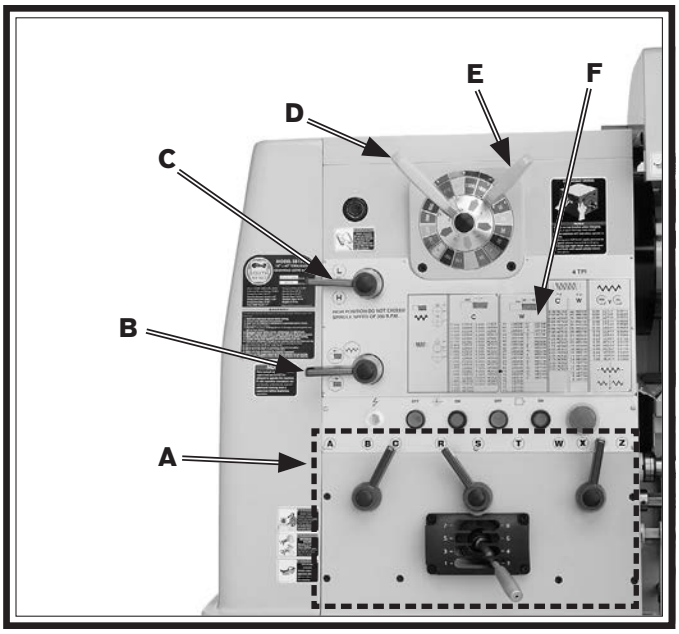

Figure 3. Headstock controls.

A. Quick Change Gearbox Levers: Controls the leadscrew and feed rod speed for threading and feed operations.

B. Headstock Feed Direction Lever: Controls the direction that the leadscrew and feed rod rotate.

C. Gearbox Range Lever: Shifts the quick-change gearbox into low range, neutral, or high range.

D. Spindle Speed Lever: Selects one of the four spindle speeds within the available range.

E. Spindle Speed Range Lever: Selects one of four spindle speed ranges.

F. Threading and Feed Charts: Displays the necessary configurations of the gearbox levers and end gears for different threading or feeding options.

Control Panel

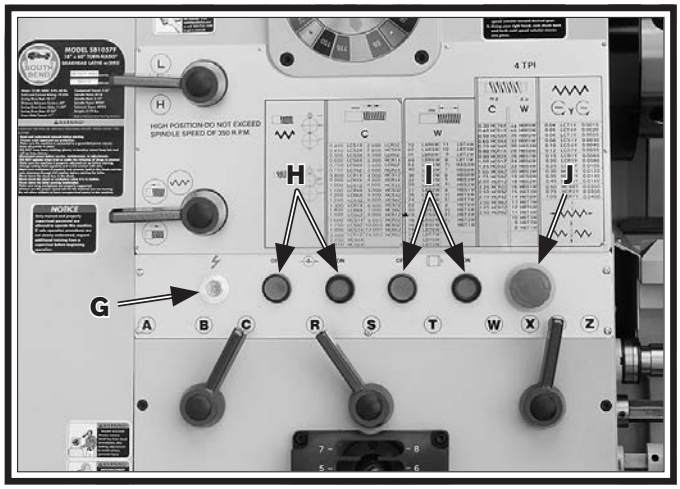

Figure 4. Control panel.

G. Power Light: Illuminates when lathe controls are receiving power.

H. Coolant Pump OFF & ON Buttons: Control the coolant pump motor.

I. Spindle Motor OFF & ON Buttons: Controls the spindle motor.

J. STOP Button: Stops all machine functions. Twist clockwise to reset.

Carriage

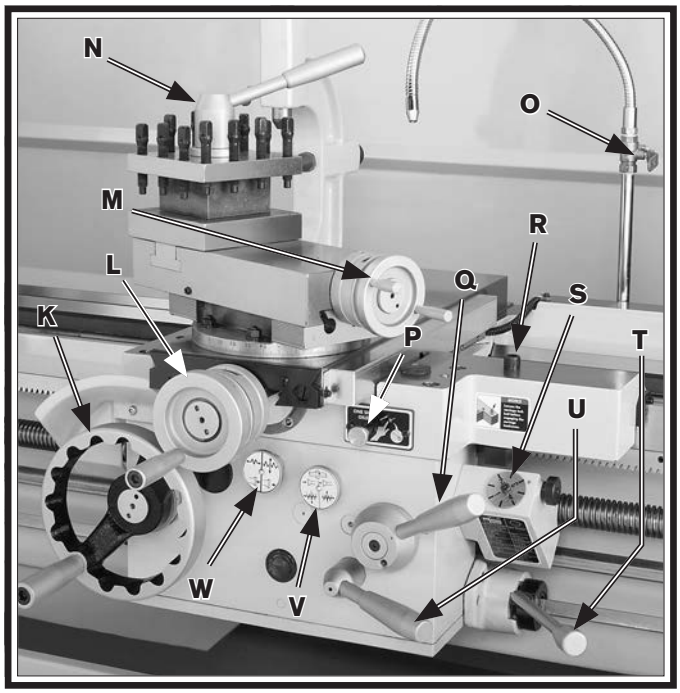

Figure 5. Carriage controls.

K. Carriage Handwheel: Moves the carriage along the bed. Can be disengaged during power feed operations to prevent an entanglement hazard.

L. Cross Slide Handwheel: Moves the cross slide toward and away from the workpiece.

M. Compound Rest Handwheel: Moves the tool toward and away from the workpiece at the preset angle of the compound rest.

N. 4-Way Tool Post: Mounts up to four cutting tools at once that can be individually indexed to the workpiece.

O. Coolant Flow Control Lever: Controls the flow of coolant from the nozzle.

P. One-Shot Oiler: Draws oil from the apron reservoir to lubricate the carriage ways through various oil ports.

Q. Half Nut Lever: Engages/disengages the half nut for threading operations.

R. Carriage Lock: Secures the carriage in place when the carriage should not move.

S. Thread Dial and Chart: Dial indicates when to engage the half nut during threading operations. Chart indicates on which thread dial reading to engage the half nut for specific inch thread pitches.

T. Spindle Lever: Starts, stops and reverses direction of spindle rotation.

U. Feed ON/OFF Lever: Engages/disengages power feed.

V. Apron Feed Direction Knob: Changes direction of carriage or the cross slide feed without having to stop the lathe and move the headstock feed direction lever.

W. Feed Selection Knob: Selects the carriage or cross slide for power feed.

Carriage Feed Clutch Knob

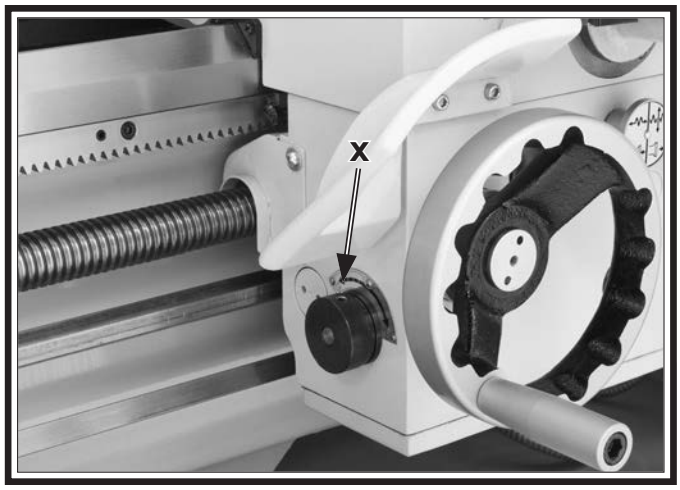

Figure 6. Adjustable carriage feed clutch knob.

X. Carriage Feed Clutch Knob: Adjusts how easily the carriage clutch will disengage automatic feeding when the carriage contacts a feed stop or in the event of a crash. Tightening this knob all the way disables the carriage clutch completely.

Tailstock

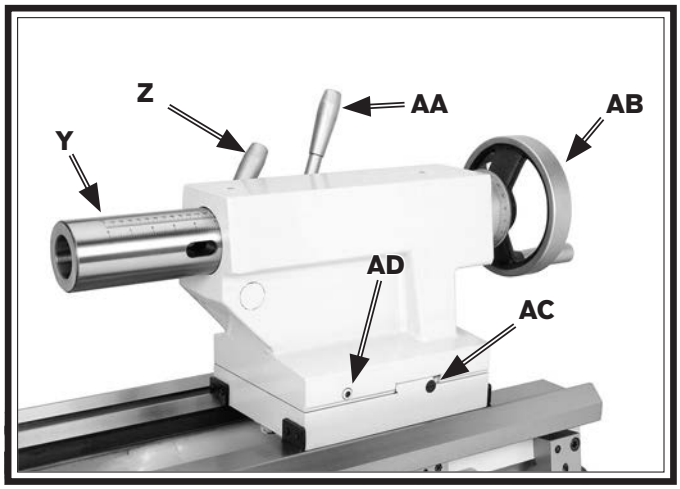

Figure 7. Tailstock controls.

Y. Quill: The quill has an MT#5 taper, metric and inch scale, and a drift slot to remove tight-fitting tooling.

Z. Quill Lock Lever: Secures the quill in position.

AA. Tailstock Lock Lever: Secures the tailstock in position along the bedway.

AB. Tailstock Handwheel: Moves the quill toward or away from the spindle. The graduated dial has 0.001" increments with one full revolution equaling 0.200" of quill travel.

AC. Tailstock Gib Screws: Adjust the tapered gib to control tailstock offset accuracy.

AD. Tailstock Offset Screws: Adjust the tailstock offset left or right from the spindle centerline.

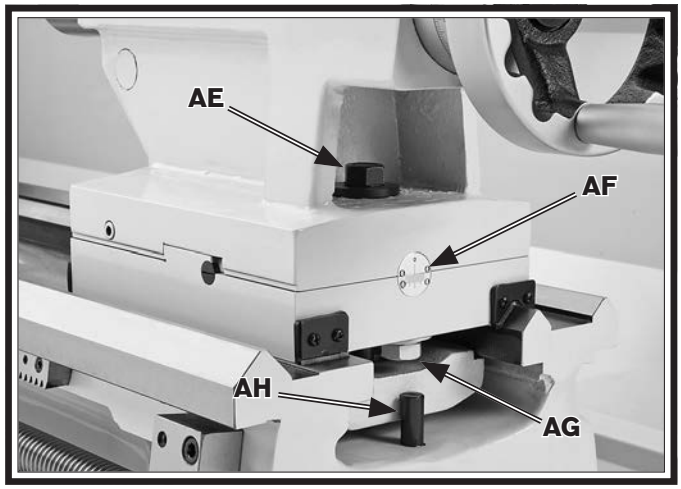

Figure 8. Tailstock controls.

AE. Tailstock Clamp Bolt: Adjusts the clamping pressure applied by the tailstock lock lever.

AF. Offset Scale: Indicates the relative distance of tailstock offset from the spindle centerline.

AG Offset Lock Bolt: Clamps together the upper and lower halves of the tailstock after the offset is adjusted.

AH. Tailstock Stop Pin: Prevents the tailstock from sliding off of the ways.

Safety Foot Brake

This lathe is equipped with a foot brake (see **Figure 9**) to quickly stop the spindle instead of allowing it to coast to a stop on its own.

Pressing the foot brake disengages the spindle clutch from the motor drive train inside the headstock.

After the foot brake is used, the spindle lever is used to re-start spindle rotation.

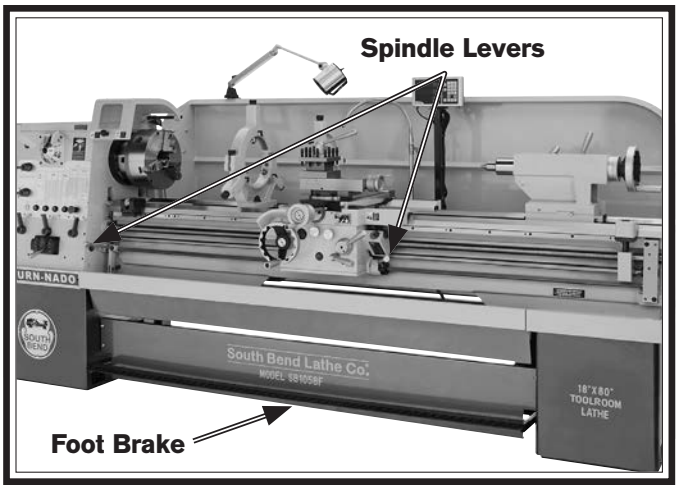

Figure 9. Foot brake and spindle levers.

Product Specifications

P.O. Box 2027, Bellingham, WA 98227 U.S.A.
PHONE: (360) 734-1540 • © South Bend Lathe Co.
www.southbendlathe.com

MODEL SB1046PF, SB1047F, SB1048PF
21" TURN-NADO® GEARHEAD LATHE w/DRO

Model Number	SB1046PF	SB1047F	SB1048PF
Product Dimensions			
Weight	5830 lbs.	6640 lbs.	8140 lbs.
Width (side-to-side)/Depth (front-to-back)/Height	110½" x 27" x 54¾"	130¼" x 27" x 54¾"	169¾" x 27" x 54¾"
Foot Print (Width/Depth)	122¼" x 71¾"	141¾" x 71¾"	182" x 71¾"
Shipping Dimensions			
Type	Wood Slat Crate		
Weight	6182 lbs.	7440 lbs.	8712 lbs.
Width (side-to-side)/Depth (front-to-back)/Height	121" x 45" x 69"	141" x 45" x 74"	183" x 45" x 69"
Electrical			
Power Requirement	440V, 3-Phase, 60Hz		
Full-Load Current Rating	19.23A		
Minimum Circuit Size	30A		
Switch	Magnetic with Thermal Protection		
Switch Voltage	440V		
Plug Included	No		
Recommended Connection Type	Hardwire to Locking Disconnect Switch		

Model Number	SB1046PF	SB1047F	SB1048PF
Main Motor			
Type	TEFC Induction		
Horsepower	15 HP		
Voltage	440V		
Phase	3-Phase		
Amps	19A		
Speed	1720 RPM		
Cycle	60 Hz		
Power Transfer	V-Belt & Gear		
Bearings	Shielded & Permanently Sealed		
Coolant Motor			
Type	TEFC Induction		
Horsepower	⅛ HP		
Voltage	440V		
Phase	3-Phase		
Amps	0.23A		
Speed	3450 RPM		
Cycle	60 Hz		
Power Transfer	Direct Drive		
Bearings	Shielded & Permanently Sealed		
Operation Information			
Swing Over Bed	21 in.		
Distance Between Centers	60 in.	80 in.	120 in.
Swing Over Cross Slide	14.01 in.		
Swing Over Saddle	21 in.		
Swing Over Gap	31.10 in.		
Maximum Tool Bit Size	1 in.		
Compound Travel	5.39 in.		
Carriage Travel	59 in.	79 in.	119 in.
Cross Slide Travel	11 in.		

Model Number	SB1046PF	SB1047F	SB1048PF
Headstock Information			
Spindle Bore	3.15 in.		
Spindle Taper	MT#7		
Number of Spindle Speeds	16		
Range of Spindle Speeds	20–1600 RPM		
Spindle Type	D1-8 Camlock		
Spindle Bearings	Tapered Roller		
Tailstock Information			
Tailstock Quill Travel	6.5 in.		
Tailstock Taper	MT#5		
Tailstock Barrel Diameter	3 in.		
Threading Information			
Number of Longitudinal Feeds	15		
Range of Longitudinal Feeds	0.0015–0.0400 in./rev.		
Number of Cross Feeds	15		
Range of Cross Feeds	0.00075–0.0200 in./rev		
Number of Inch Threads	38		
Range of Inch Threads	2–72 TPI		
Number of Metric Threads	40		
Range of Metric Threads	0.4–14 mm		
Number of Modular Pitches	18		
Range of Modular Pitches	0.3–3.5 MP		
Number of Diametral Pitches	21		
Range of Diametral Pitches	8–44 DP		
Dimensions			
Bed Width	13.58 in.		
Leadscrew Diameter	1⅜ in.		
Leadscrew TPI	4 TPI		
Leadscrew Length	85.39 in.	105 in.	145.43 in.
Steady Rest Capacity	⅝–7 1/16 in.		
Follow Rest Capacity	⅝–5⅛ in.		
Faceplate Size	14 in.		
Floor to Center Height	46.65 in.		
Height With Leveling Jacks	47.9 in.		

Model Number	SB1046PF	SB1047F	SB1048PF
Construction			
Headstock	Cast Iron		
Headstock Gears	Flame-Hardened Steel		
Bed	Meehanite Castings with Induction-Hardened Ways		
Stand	Cast Iron		
Paint	Urethane		
Other			
Country of Origin	Taiwan (Some Components Made in USA & Germany)		
Warranty	1 Year		
Serial Number Location	ID Label on Front of Headstock		
Assembly Time	Approximately 1 Hour		
Sound Rating at Idle	76 dB		

Product Specifications

P.O. Box 2027, Bellingham, WA 98227 U.S.A.
PHONE: (360) 734-1540 • © South Bend Lathe Co.
www.southbendlathe.com

MODEL SB1056F, SB1057F, SB1058F
18" TURN-NADO® GEARHEAD LATHE w/DRO

Model Number	SB1056F	SB1057F	SB1058F
Product Dimensions			
Weight	4400 lbs.	5170 lbs.	5940 lbs.
Width (side-to-side)/Depth (front-to-back)/Height	90¾" x 27" x 54¾"	110½" x 27" x 54¾"	130¼" x 27" x 54¾"
Foot Print (Width/Depth)	102½" x 71¾"	122¼" x 71¾"	141¾" x 71¾"
Shipping Dimensions			
Type	Wood Slat Crate		
Weight	4708 lbs.	5522 lbs.	6380 lbs.
Width (side-to-side)/Depth (front-to-back)/Height	100" x 45" x 69"	121" x 45" x 69"	141" x 45" x 69"
Electrical			
Power Requirement	440V, 3-Phase, 60Hz		
Full-Load Current Rating	19.23A		
Minimum Circuit Size	30A		
Switch	Magnetic with Thermal Protection		
Switch Voltage	440V		
Plug Included	No		
Recommended Connection Type	Hardwire to Locking Disconnect Switch		

Model Number	SB1056F	SB1057F	SB1058F
Main Motor			
Type	TEFC Induction		
Horsepower	15 HP		
Voltage	440V		
Phase	3-Phase		
Amps	19A		
Speed	1720 RPM		
Cycle	60 Hz		
Power Transfer	V-Belt & Gear		
Bearings	Shielded & Permanently Sealed		
Coolant Motor			
Type	TEFC Induction		
Horsepower	⅛ HP		
Voltage	440V		
Phase	3-Phase		
Amps	0.23A		
Speed	3450 RPM		
Cycle	60 Hz		
Power Transfer	Direct Drive		
Bearings	Shielded & Permanently Sealed		
Operation Information			
Swing Over Bed	18.11 in.		
Distance Between Centers	40 in.	60 in.	80 in.
Swing Over Cross Slide	11.02 in		
Swing Over Saddle	18 in.		
Swing Over Gap	27.95 in.		
Maximum Tool Bit Size	1 in.		
Compound Travel	5.39 in.		
Carriage Travel	39 in.	59 in.	79 in.
Cross Slide Travel	11 in.		

Model Number	SB1056F	SB1057F	SB1058F
Headstock Information			
Spindle Bore	3.15 in.		
Spindle Taper	MT#7		
Number of Spindle Speeds	16		
Range of Spindle Speeds	20–1600 RPM		
Spindle Type	D1-8 Camlock		
Spindle Bearings	Tapered Roller		
Tailstock Information			
Tailstock Quill Travel	6.5 in.		
Tailstock Taper	MT#5		
Tailstock Barrel Diameter	3 in.		
Threading Information			
Number of Longitudinal Feeds	15		
Range of Longitudinal Feeds	0.0015–0.0400 in./rev.		
Number of Cross Feeds	15		
Range of Cross Feeds	0.00075–0.0200 in./rev		
Number of Inch Threads	38		
Range of Inch Threads	2–72 TPI		
Number of Metric Threads	40		
Range of Metric Threads	0.4–14 mm		
Number of Modular Pitches	18		
Range of Modular Pitches	0.3–3.5 MP		
Number of Diametral Pitches	21		
Range of Diametral Pitches	8–44 DP		
Dimensions			
Bed Width	13.58 in.		
Leadscrew Diameter	1⅜ in.		
Leadscrew TPI	4 TPI		
Leadscrew Length	65.71 in.	85.39 in.	105.08 in.
Steady Rest Capacity	⅝–7 1/16 in.		
Follow Rest Capacity	⅝–5⅛ in.		
Faceplate Size	14 in.		
Feed Rod Diameter	0.93 in		
Floor to Center Height	45.08 in.		
Height With Leveling Jacks	46.25 in		

Model Number	SB1056F	SB1057F	SB1058F
Construction			
Headstock	Cast Iron		
Headstock Gears	Flame-Hardened Steel		
Bed	Meehanite Castings with Induction-Hardened Ways		
Stand	Cast Iron		
Paint	Urethane		
Other			
Country of Origin	Taiwan (Some Components Made in USA & Germany)		
Warranty	1 Year		
Serial Number Location	ID Label on Front of Headstock		
Assembly Time	Approximately 1 Hour		
Sound Rating at Idle	76 dB		

Understanding Risks of Machinery

Operating all machinery and machining equipment can be dangerous or relatively safe depending on how it is installed and maintained, and the operator's experience, common sense, risk awareness, working conditions, and use of personal protective equipment (safety glasses, respirators, etc.).

The owner of this machinery or equipment is ultimately responsible for its safe use. This responsibility includes proper installation in a safe environment, personnel training and usage authorization, regular inspection and maintenance, manual availability and comprehension, application of safety devices, integrity of cutting tools or accessories, and the usage of approved personal protective equipment by all operators and bystanders.

The manufacturer of this machinery or equipment will not be held liable for injury or property damage from negligence, improper training, machine modifications, or misuse. Failure to read, understand, and follow the manual and safety labels may result in serious personal injury, including amputation, broken bones, electrocution, or death.

The signals used in this manual to identify hazard levels are as follows:

⚠DANGER	***Death or catastrophic harm WILL occur.***	**⚠CAUTION**	***Moderate injury or fire MAY occur.***
⚠WARNING	***Death or catastrophic harm COULD occur.***	***NOTICE***	***Machine or property damage may occur.***

Basic Machine Safety

Owner's Manual: All machinery and machining equipment presents serious injury hazards to untrained users. To reduce the risk of injury, anyone who uses THIS item MUST read and understand this entire manual before starting.

Personal Protective Equipment: Operating or servicing this item may expose the user to flying debris, dust, smoke, dangerous chemicals, or loud noises. These hazards can result in eye injury, blindness, long-term respiratory damage, poisoning, cancer, reproductive harm or hearing loss. Reduce your risks from these hazards by wearing approved eye protection, respirator, gloves, or hearing protection.

Trained/Supervised Operators Only: Untrained users can seriously injure themselves or bystanders. Only allow trained and properly supervised personnel to operate this item. Make sure safe operation instructions are clearly understood. If electrically powered, use padlocks and master switches, and remove start switch keys to prevent unauthorized use or accidental starting.

Guards/Covers: Accidental contact with moving parts during operation may cause severe entanglement, impact, cutting, or crushing injuries. Reduce this risk by keeping any included guards/covers/doors installed, fully functional, and positioned for maximum protection.

Entanglement: Loose clothing, gloves, neckties, jewelry or long hair may get caught in moving parts, causing entanglement, amputation, crushing, or strangulation. Reduce this risk by removing/securing these items so they cannot contact moving parts.

Mental Alertness: Operating this item with reduced mental alertness increases the risk of accidental injury. Do not let a temporary influence or distraction lead to a permanent disability! Never operate when under the influence of drugs/alcohol, when tired, or otherwise distracted.

Safe Environment: Operating electrically powered equipment in a wet environment may result in electrocution; operating near highly flammable materials may result in a fire or explosion. Only operate this item in a dry location that is free from flammable materials.

Electrical Connection: With electically powered equipment, improper connections to the power source may result in electrocution or fire. Always adhere to all electrical requirements and applicable codes when connecting to the power source. Have all work inspected by a qualified electrician to minimize risk.

Disconnect Power: Adjusting or servicing electrically powered equipment while it is connected to the power source greatly increases the risk of injury from accidental startup. Always disconnect power BEFORE any service or adjustments, including changing blades or other tooling.

Secure Workpiece/Tooling: Loose workpieces, cutting tools, or rotating spindles can become dangerous projectiles if not secured or if they hit another object during operation. Reduce the risk of this hazard by verifying that all fastening devices are properly secured and items attached to spindles have enough clearance to safely rotate.

Chuck Keys or Adjusting Tools: Tools used to adjust spindles, chucks, or any moving/rotating parts will become dangerous projectiles if left in place when the machine is started. Reduce this risk by developing the habit of always removing these tools immediately after using them.

Work Area: Clutter and dark shadows increase the risks of accidental injury. Only operate this item in a clean, non-glaring, and well-lighted work area.

Properly Functioning Equipment: Poorly maintained, damaged, or malfunctioning equipment has higher risks of causing serious personal injury compared to those that are properly maintained. To reduce this risk, always maintain this item to the highest standards and promptly repair/service a damaged or malfunctioning component. Always follow the maintenance instructions included in this documentation.

Unattended Operation: Electrically powered equipment that is left unattended while running cannot be controlled and is dangerous to bystanders. Always turn the power ***OFF*** before walking away.

Health Hazards: Certain cutting fluids and lubricants, or dust/smoke created when cutting, may contain chemicals known to the State of California to cause cancer, respiratory problems, birth defects, or other reproductive harm. Minimize exposure to these chemicals by wearing approved personal protective equipment and operating in a well ventilated area.

Difficult Operations: Attempting difficult operations with which you are unfamiliar increases the risk of injury. If you experience difficulties performing the intended operation, STOP! Seek an alternative method to accomplish the same task, ask a qualified expert how the operation should be performed, or contact our Technical Support for assistance.

Additional Metal Lathe Safety

Speed Rates. Operating the lathe at the wrong speed can cause nearby parts to break or the workpiece to come loose, which will result in dangerous projectiles that could cause severe impact injuries. Large or non-concentric workpieces must be turned at slow speeds. Always use the appropriate feed and speed rates.

Chuck Key Safety. A chuck key left in the chuck can become a deadly projectile when the spindle is started. Always remove the chuck key after using it. Develop a habit of not taking your hand off of a chuck key unless it is away from the machine.

Safe Clearances. Workpieces that crash into other components on the lathe may throw dangerous projectiles in all directions, leading to impact injury and damaged equipment. Before starting the spindle, make sure the workpiece has adequate clearance by hand-rotating it through its entire range of motion. Also, check the tool and tool post clearance, chuck clearance, and saddle clearance.

Long Stock Safety. Long stock can whip violently if not properly supported, causing serious impact injury and damage to the lathe. Reduce this risk by supporting any stock that extends from the chuck/headstock more than three times its own diameter. Always turn long stock at slow speeds.

Securing Workpiece. An improperly secured workpiece can fly off the lathe spindle with deadly force, which can result in a severe impact injury. Make sure the workpiece is properly secured in the chuck or faceplate before starting the lathe.

Chucks. Chucks are very heavy and difficult to grasp, which can lead to crushed fingers or hands if mishandled. Get assistance when handling chucks to reduce this risk. Protect your hands and the precision-ground ways by using a chuck cradle or piece of plywood over the ways of the lathe when servicing chucks. Use lifting devices when necessary.

Clearing Chips. Metal chips can easily cut bare skin—even through a piece of cloth. Avoid clearing chips by hand or with a rag. Use a brush or vacuum to clear metal chips.

Stopping Spindle by Hand. Stopping the spindle by putting your hand on the workpiece or chuck creates an extreme risk of entanglement, impact, crushing, friction, or cutting hazards. Never attempt to slow or stop the lathe spindle with your hand. Allow the spindle to come to a stop on its own or use the brake.

Crashes. Aggressively driving the cutting tool or other lathe components into the chuck may cause an explosion of metal fragments, which can result in severe impact injuries and major damage to the lathe. Reduce this risk by releasing automatic feeds after use, not leaving lathe unattended, and checking clearances before starting the lathe. Make sure no part of the tool, tool holder, compound rest, cross slide, or carriage will contact the chuck during operation.

Coolant Safety. Coolant is a very poisonous biohazard that can cause personal injury from skin contact alone. Incorrectly positioned coolant nozzles can splash on the operator or the floor, resulting in an exposure or slipping hazard. To decrease your risk, change coolant regularly and position the nozzle where it will not splash or end up on the floor.

Tool Selection. Cutting with an incorrect or dull tool increases the risk of accidental injury due to the extra force required for the operation, which increases the risk of breaking or dislodging components that can cause small shards of metal to become dangerous projectiles. Always select the right cutter for the job and make sure it is sharp. A correct, sharp tool decreases strain and provides a better finish.

Additional Chuck Safety

Entanglement. Entanglement with a rotating chuck can lead to death, amputation, broken bones, or other serious injury. Never attempt to slow or stop the lathe chuck by hand, and always roll up long sleeves, tie back long hair, and remove any jewelry or loose apparel BEFORE operating.

Chuck Speed Rating. Excessive spindle speeds greatly increase the risk of the workpiece or chuck being thrown from the machine with deadly force. Never use spindle speeds faster than the chuck RPM rating or the safe limits of your workpiece.

Using Correct Equipment. Many workpieces can only be safely turned in a lathe if additional support equipment, such as a tailstock or steady rest, is used. If the operation is too hazardous to be completed with the lathe or existing equipment, the operator must have enough experience to know when to use a different machine or find a safer way.

Trained Operators Only. Using a chuck incorrectly can result in workpieces coming loose at high speeds and striking the operator or bystanders with deadly force. To reduce the risk of this hazard, read and understand this document and seek additional training from an experienced chuck user before using a chuck.

Chuck Capacity. Avoid exceeding the capacity of the chuck by clamping an oversized workpiece. If the workpiece is too large to safely clamp with the chuck, use a faceplate or a larger chuck if possible. Otherwise, the workpiece could be thrown from the lathe during operation, resulting in serious impact injury or death.

Clamping Force. Inadequate clamping force can lead to the workpiece being thrown from the chuck and striking the operator or bystanders. Maximum clamping force is achieved when the chuck is properly maintained and lubricated, all jaws are fully engaged with the workpiece, and the maximum chuck clamping diameter is not exceeded.

Proper Maintenance. All chucks must be properly maintained and lubricated to achieve maximum clamping force and withstand the rigors of centrifugal force. To reduce the risk of a thrown workpiece, follow all maintenance intervals and instructions in this document.

Disconnect Power. Serious entanglement or impact injuries could occur if the lathe is started while you are adjusting, servicing, or installing the chuck. Always disconnect the lathe from power before performing these procedures.

Preparation Overview

The purpose of the preparation section is to help you prepare your machine for operation. The list below outlines this basic process. Specific steps for each of these points will be covered in detail later in this section.

The typical preparation process is as follows:

1. Unpack the lathe and inventory the contents of the box/crate.
2. Clean the lathe and its components.
3. Identify an acceptable location for the lathe and move it to that location.
4. Level the lathe and either bolt it to the floor or place it on mounts.
5. Assemble the loose components and make any necessary adjustments or inspections to ensure the lathe is ready for operation.
6. Check/lubricate the lathe.
7. Connect the lathe to the power source.
8. Test run the lathe to make sure it functions properly.
9. Perform the spindle break-in procedure to prepare the lathe for operation.

Things You'll Need

To complete the preparation process, you will need the following items:

For Lifting and Moving

- A forklift or other power lifting device rated for at least 25% more than the shipping weight of the lathe (see **Product Specifications** beginning on **Page 9**)
- Lifting straps, each rated for at least 25% more than the shipping weight of the lathe
- Guide rods for steading the load when lifting
- Two other people for assistance when moving machine
- Hardwood blocking (see **Page 27**)

For Power Connection

- A power source that meets the minimum circuit requirements for this machine (review the **Power Supply Requirements** section on the next page for details)
- An electrician or qualified service personnel to ensure a safe and code-compliant connection to the power source

For Cleaning & Assembly

- Cotton rags
- Mineral spirits
- Quality metal protectant oil
- Safety glasses
- Wrench or socket 21mm
- Wrench or socket 19mm
- Floor mounting hardware as needed
- Precision level
- Standard screwdriver #2

Power Supply Requirements

Availability

Before installing the machine, consider the availability and proximity of the required power supply circuit. If an existing circuit does not meet the requirements for this machine, a new circuit must be installed.

To minimize the risk of electrocution, fire, or equipment damage, installation work and electrical wiring must be done by an electrician or qualified service personnel in accordance with all applicable codes.

⚠WARNING

Serious injury could occur if you connect the machine to power before completing the setup process. DO NOT connect to power until instructed later in this manual.

Full-Load Current Rating

The full-load current rating is the amperage a machine draws at 100% of the rated output power. On machines with multiple motors, this is the amperage drawn by the largest motor or sum of all motors and electrical devices that might operate at one time during normal operations.

SB1046PF Full-Load Rating..... 19.23 Amps
SB1047F Full-Load Rating..... 19.23 Amps
SB1048PF Full-Load Rating..... 19.23 Amps
SB1056F Full-Load Rating..... 19.23 Amps
SB1057F Full-Load Rating..... 19.23 Amps
SB1058F Full-Load Rating..... 19.23 Amps

⚠CAUTION

For your own safety and protection of property, consult an electrician if you are unsure about wiring practices or applicable electrical codes.

The full-load current is not the maximum amount of amps that the machine will draw. If the machine is overloaded, it will draw additional amps beyond the full-load rating.

If the machine is overloaded for a sufficient length of time, damage, overheating, or fire may result—especially if connected to an undersized circuit. To reduce the risk of these hazards, avoid overloading the machine during operation and make sure it is connected to a power supply circuit that meets the requirements in the following section.

Circuit Requirements

This machine is prewired to operate on a 440V power supply circuit that has a verified ground and meets the following requirements:

Nominal Voltage 440V/480V
Cycle ..... 60 Hz
Phase 3-Phase
Circuit Rating..... 30 Amps
Connection .. Hardwire with Locking Switch

A power supply circuit includes all electrical equipment between the main breaker box or fuse panel in your building and the incoming power connections inside the machine. This circuit must be safely sized to handle the full-load current that may be drawn from the machine for an extended period of time. (If this machine is

Note: The circuit requirements in this manual are for a dedicated circuit—where only one machine will be running at a time. If this machine will be connected to a shared circuit where multiple machines will be running at the same time, consult a qualified electrician to ensure the circuit is properly sized.

Grounding Requirements

This machine must be grounded! In the event of certain types of malfunctions or breakdowns, grounding provides a path of least resistance for electric current in order to reduce the risk of electric shock.

Improper connection of the equipment-grounding wire can result in a risk of electric shock. The wire with green insulation (with or without yellow stripes) is the equipment-grounding wire. If repair or replacement of the power cord is necessary, do not connect the equipment-grounding wire to a live (current carrying) terminal.

Check with a qualified electrician or service personnel if you do not understand these grounding requirements, or if you are in doubt about whether the machine is properly grounded. If you ever notice that a cord is damaged or worn, disconnect it from power, and immediately replace it with a new one.

⚠WARNING

Electrocution or fire may occur if machine is not correctly grounded and attached to the power supply. Use an electrician or qualified service personnel to ensure a safe power connection.

440V Operation

As specified in the **Circuit Requirements** section on the previous page, these machines must be hardwired to the power source, using a locking switch (see **Figure 10**).

These machines must also be connected to a grounded metal permanent wiring system; or to a system with an equipment-grounding conductor. Due to the complexity and high voltage involved, this type of installation MUST be done by an electrician or qualified service personnel.

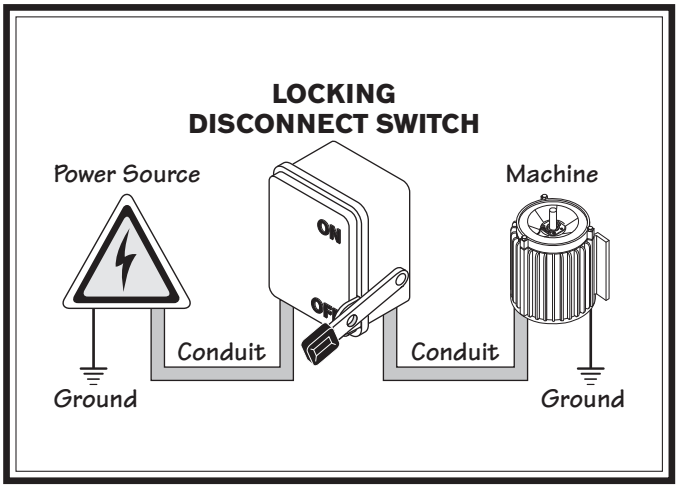

Figure 10. Typical hardwire setup with a locking disconnect switch.

Unpacking

This item was carefully packaged to prevent damage during transport. If you discover any damage, please immediately call Customer Service at (360) 734-1540 for advice. You may need to file a freight claim, so save the containers and all packing materials for possible inspection by the carrier or its agent.

Inventory

Main Inventory 1 (Figure 11)		Qty
A.	Steady Rest Assembly (Installed)	1
B.	14" Faceplate w/D1-8 Camlock Stud Set	1
C.	3-Jaw Chuck Key (Clamped on Lathe)	1
D.	Model SB1232 14" 4-Jaw Chuck w/Combo Jaws	1
E.	4-Jaw Chuck Key	1
F.	Tool Post T-Wrench (Clamped on Lathe)	1
G.	Follow Rest Assembly (Installed)	1

Tool Box Inventory (Figure 12)		Qty
H.	Tool Box	1
I.	Open End Wrench 22/24mm	1
J.	Open End Wrench 14/17mm	1
K.	Open End Wrench 10/12mm	1
L.	Combination Wrench 27mm	1
M.	Phillips Screwdriver #2	1
N.	Standard Screwdriver #2	1
O.	Carbide-Tipped Dead Center MT#5	1
P.	Dead Center MT#5	1
Q.	Tapered Spindle Sleeve MT#7-#5	1
R.	Carriage Handwheel Handle	1
S.	Cross Slide Handwheel Handle	1
T.	Hex Wrench Set 1.5-10mm	1
U.	Hex Wrench 10mm	1
V.	Cast Iron Feet	8

Installed & Not Shown	Qty
• SB1312 12" 3-Jaw Chuck	1
• SB1404 12½" Back Plate for SB1312	1

Note: Some inventory components or additional documentation may be shipped inside of the lathe electrical cabinet. These items MUST be removed before connecting the lathe to the power source.

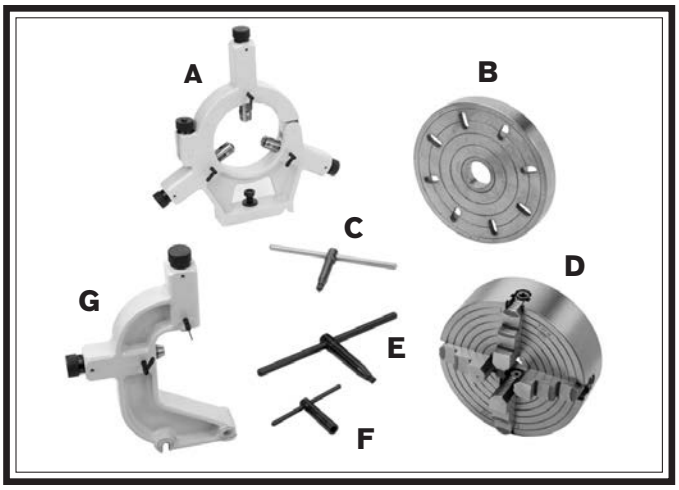

Figure 11. Main inventory.

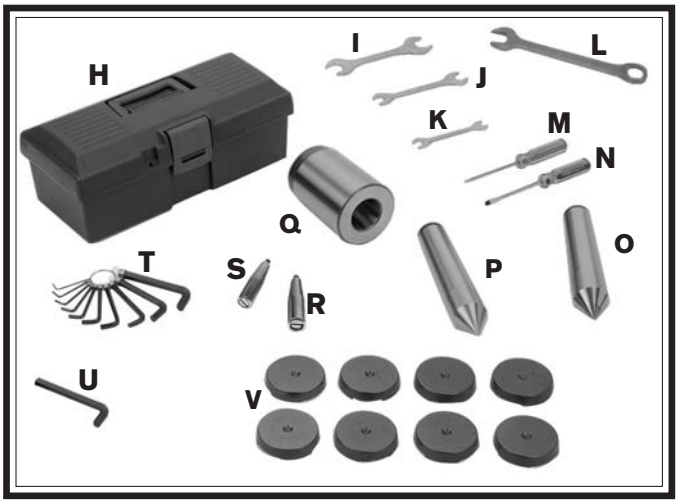

Figure 12. Toolbox inventory.

Cleaning & Protecting

The unpainted surfaces are coated at the factory with a heavy-duty rust preventative that prevents corrosion during shipment and storage. The benefit of this rust preventative is that it works very well. The downside is that it can be time-consuming to thoroughly remove.

Be patient and do a careful job when cleaning and removing the rust preventative. The time you spend doing this will reward you with smooth-sliding parts and a better appreciation for the proper care of the unpainted surfaces.

Although there are many ways to successfully remove the rust preventative, the following process works well in most situations.

Before cleaning, gather the following:

- Disposable rags
- Cleaner/degreaser (certain citrus-based degreasers work extremely well and they have non-toxic fumes)
- Safety glasses & disposable gloves

Note: Automotive degreasers, mineral spirits, or WD•40 can be used to remove rust preventative. Before using these products, though, test them on an inconspicuous area of a painted surface to make sure they will not damage it.

⚠WARNING

Gasoline and petroleum products have low flash points and can explode or cause fire if used for cleaning. Avoid using these products to remove rust preventative.

⚠CAUTION

Many cleaning solvents are toxic if inhaled. Minimize your risk by only using these products in a well ventilated area.

NOTICE

Avoid chlorine-based solvents, such as acetone or brake parts cleaner that may damage painted surfaces. Always follow the manufacturer's instructions when using any type of cleaning product.

Basic steps for removing rust preventative:

1. Put on safety glasses and disposable gloves.

2. Coat all surfaces that have rust preventative with a liberal amount of your cleaner or degreaser and let them soak for a few minutes.

3. Wipe off the surfaces. If your cleaner or degreaser is effective, the rust preventative will wipe off easily.

Note: To clean off thick coats of rust preventative on flat surfaces, such as beds or tables, use a PLASTIC paint scraper to scrape off the majority of the coating before wiping it off with your rag. (Do not use a metal scraper or it may scratch the surface.)

4. Repeat **Steps 2–3** as necessary until clean, then coat all unpainted surfaces with a quality metal protectant or light oil to prevent rust.

NOTICE

Remove the end gear cover and end gears, and use a stiff brush with mineral spirits to clean the rust preventative from the gears and shafts. DO NOT get any cleaner or rust preventative on the V-belts, as it could damage them or make them slip during operations. If the belts do become contaminated, replace them.

Location

Physical Environment

The physical environment where your machine is operated is important for safe operation and longevity of parts. For best results, operate this machine in a dry environment that is free from excessive moisture, hazardous or flammable chemicals, airborne abrasives, or extreme conditions. Extreme conditions for this type of machinery are generally those where the ambient temperature is outside the range of 41°–104°F; the relative humidity is outside the range of 20–95% (non-condensing); or the environment is subject to vibration, shocks, or bumps.

Electrical Installation

Place this machine near an existing power source that meets the minimum circuit requirements. Make sure all power cords are protected from traffic, material handling, moisture, chemicals, or other hazards. Leave access to disconnect the power source or engage a lockout/tagout device.

Lighting

Lighting around the machine must be adequate enough that operations can be performed safely. Shadows, glare, or strobe effects that may distract or impede the operator must be

Weight Load

Refer to the **Machine Specifications** for the weight of your machine. Make sure that the surface upon which the machine is placed will bear the weight of the machine, additional equipment that may be installed on the machine, and the heaviest workpiece that will be used. Additionally, consider the weight of the operator and any dynamic loading that may occur when operating the machine.

Space Allocation

Consider the largest size of workpiece that will be processed through this machine and provide enough space around the machine for adequate operator material handling or the installation of auxiliary equipment. With permanent installations, leave enough space around the machine to open or remove doors/covers as required by the maintenance and service described in this manual.

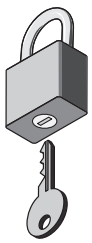

⚠CAUTION

Children or untrained people may be seriously injured by this machine. Install machine in an access restricted location.

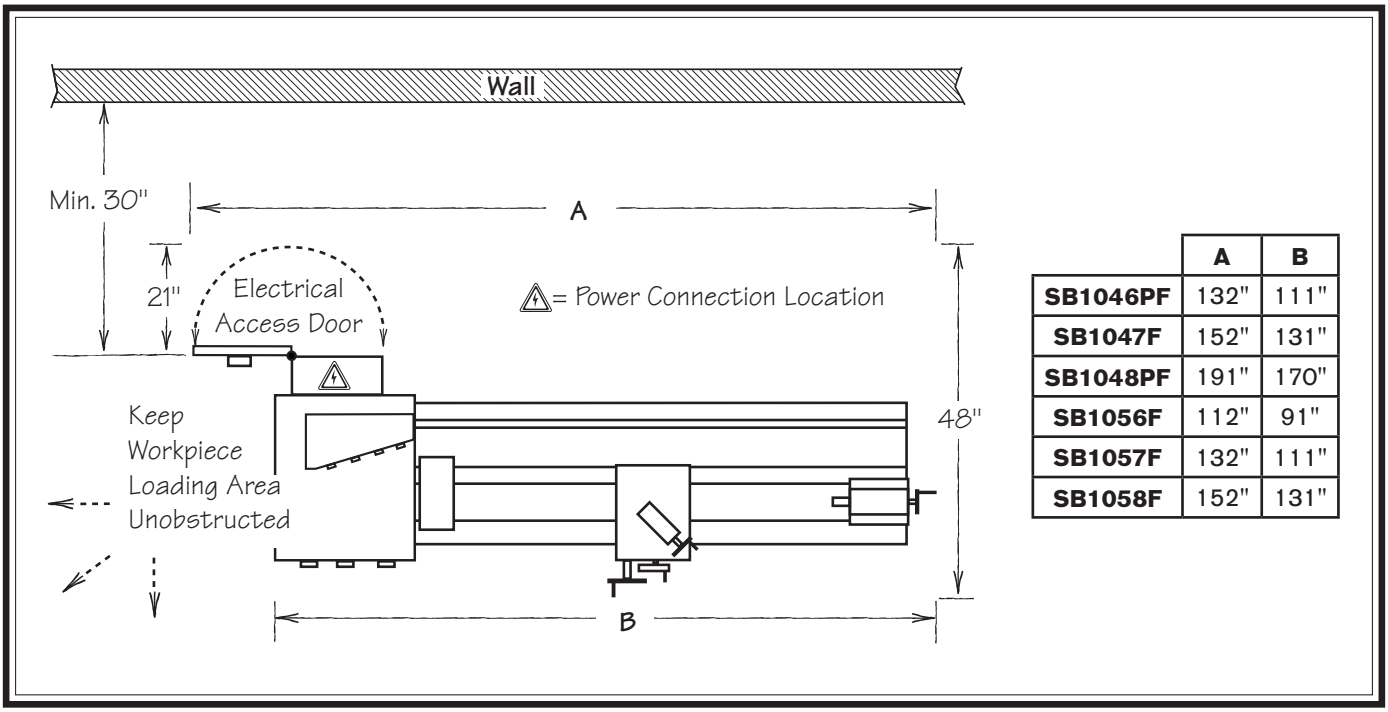

	A	B
SB1046PF	132"	111"
SB1047F	152"	131"
SB1048PF	191"	170"
SB1056F	112"	91"
SB1057F	132"	111"
SB1058F	152"	131"

Figure 13. Space required for full range of movement.

Lifting & Moving

⚠WARNING

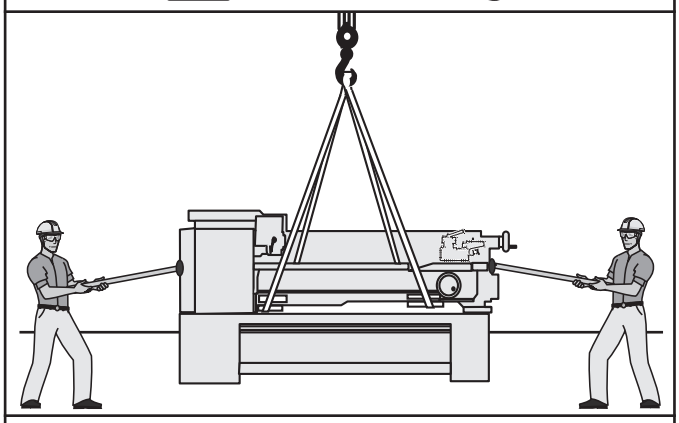

This machine and its parts are heavy! Serious personal injury may occur if safe moving methods are not used. To reduce the risk of a lifting or dropping injury, ask others for help, and use power equipment and guide rods.

Do not attempt to lift or move this lathe without using the proper lifting equipment (such as forklift or crane) or the necessary assistance from other people. Each piece of lifting equipment must be rated for at least 25% more than the shipping weight of your lathe to support dynamic loads that may be applied while lifting. Refer to **Things You'll Need** on **Page 21** for details.

To lift and move the lathe:

1. Remove the shipping crate top and sides, then remove the small components from the shipping pallet.

2. Move the lathe to its prepared location while it is still attached to the shipping pallet.

3. Unbolt the lathe from the shipping pallet

4. To balance the load for lifting, move the tailstock and carriage to the extreme right end of the bedway, then lock them in place.

Note: Before attempting to move the carriage, make sure the carriage lock is loose, the half nut is disengaged, and the power feed is disengaged (feed ON/OFF lever).

5. Position hardwood blocking under each end of the bed as shown in **Figure 14**. This will keep the lifting straps away from the leadscrew, feed rod, and spindle rod to prevent bending them during lifting.

Note: Fasten a center support between the hardwood blocking to that they will stay spread apart and in place when lifting (see the example in **Figure 15**).

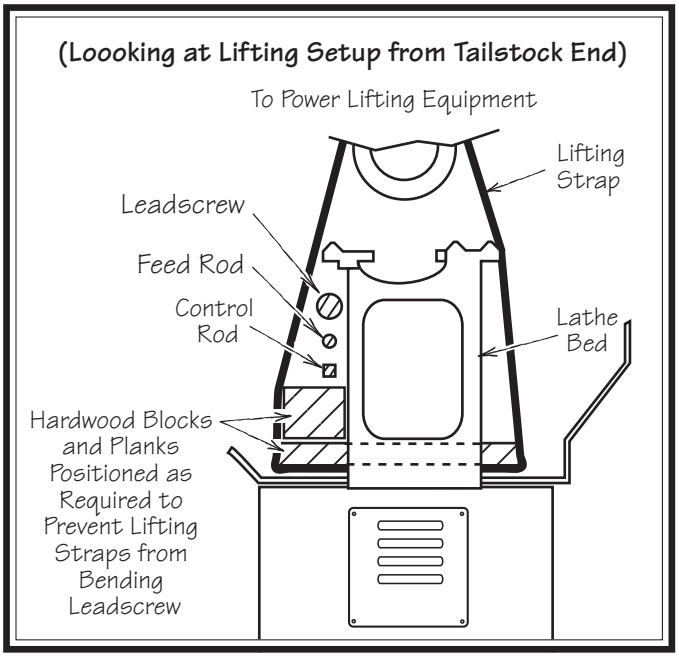

Figure 14. Lifting setup to keep straps from bending leadscrew or rods.

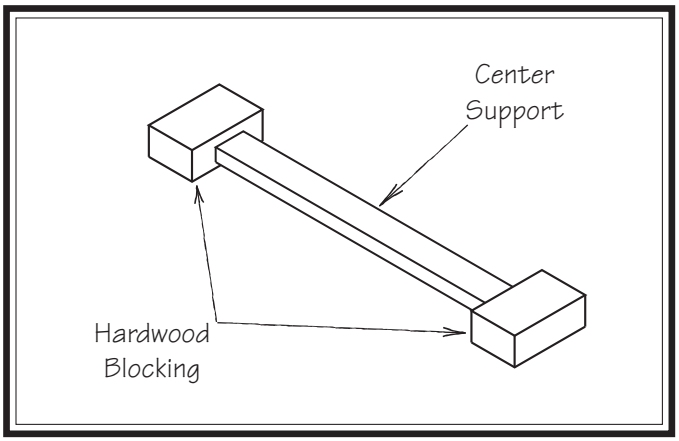

Figure 15. Example of blocking center support.

6. Attach the lifting straps to the power lifting equipment (see **Figure 16** for an example).

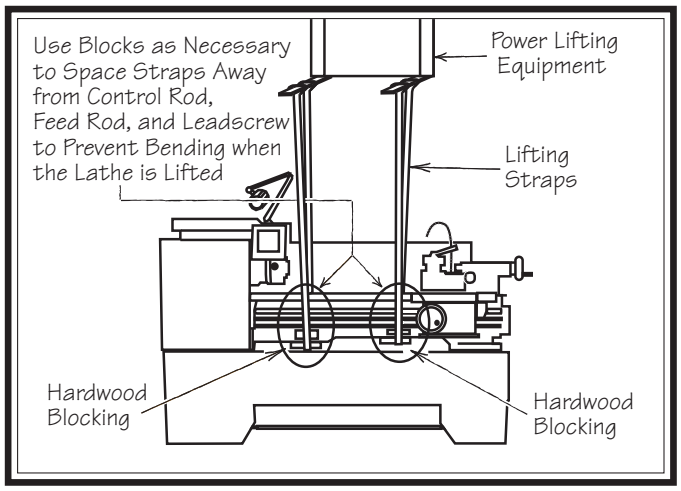

Figure 16. Example of lathe setup for lifting.

7. At each end of the lathe, have assistants connect guide rods to safely keep the lathe from swaying or tipping during lifting.

NOTICE

When lifting the lathe with straps, the load will be top heavy. Take extra care to keep the load balanced vertically and only lift it far enough to remove the shipping pallet.

8. Raise the lathe a couple of inches and check the balance of the load.

— If the load is not safely balanced, immediately lower the lathe and resolve the issue before attempting to lift it again.

9. Raise the lathe enough to clear the shipping pallet, carefully remove the pallet, then lower the lathe into position.

Leveling & Mounting

You must level your machine and either use the included foot pads and leveling hardware or bolt and shim your lathe to the floor. Because mounting your lathe to the floor with permanent hardware is an optional step and floor materials may vary, floor mounting hardware is not included.

Leveling

NOTICE

For accurate turning results and to prevent warping the cast iron bed and ways, the lathe bedways MUST be leveled from side-to-side and from front-to-back on both ends.

Re-check the bedways 24 hours after installation, two weeks after that, and then annually to make sure they remain level.

Leveling machinery helps precision components, such as bedways, remain straight and flat during the lifespan of the machine. Components on a machine that is not level may slowly twist due to the dynamic loads placed on the machine during operation.

For best results, use a precision level that is at least 12" long and sensitive enough to show a distinct movement when a 0.003" shim (approximately the thickness of one sheet of standard newspaper) is placed under one end of the level.

See the figure below for an example of a high precision level.

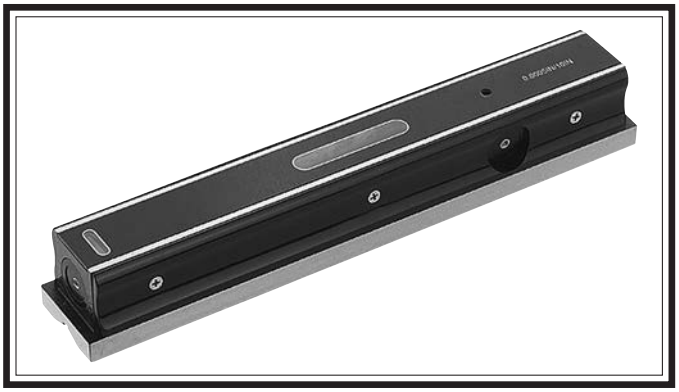

Figure 17. Example of a precision level.

To level the machine, use a precision level to make sure the bedways are level from side-to-side and from front-to-back.

— If using the included leveling pads (see **Figure 18**), place them under the six leveling jack bolt locations, then adjust the bolts to level the lathe.

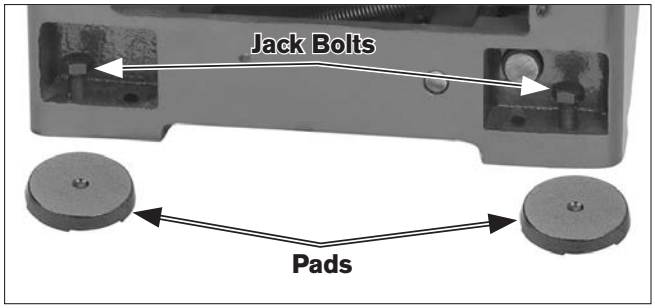

Figure 18. Leveling pads and screws.

— If using mounting hardware that does not allow for adjustment, level the lathe by placing metal shims between the lathe base and the floor before bolting it down.

Bolting to Concrete Floors

Lag screws and anchors, or anchor studs (**below**), are two popular methods for bolting machinery to a concrete floor. We suggest you research the many options and methods for mounting your machine and choose the best one for your specific application.

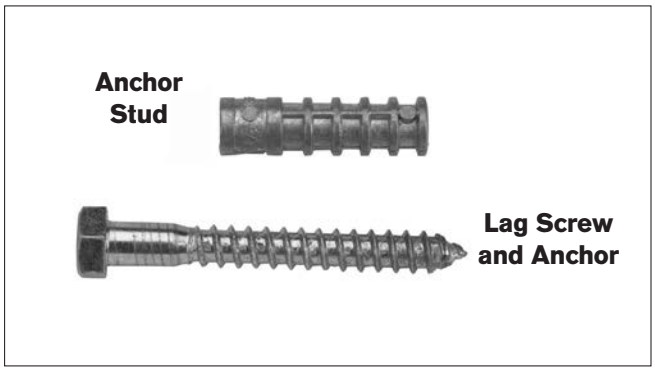

Figure 19. Common types of fasteners for bolting machinery to concrete floors.

NOTICE

Most electrical codes require that machines connected to the power source by fixed conduit MUST be secured to the floor.

Assembly

With the exception of the handwheel handles, the lathe is shipped fully assembled.

To install the handwheel handles, thread the large handle into the carriage handwheel and the small handle into the cross slide handwheel, as shown in **Figure 20**.

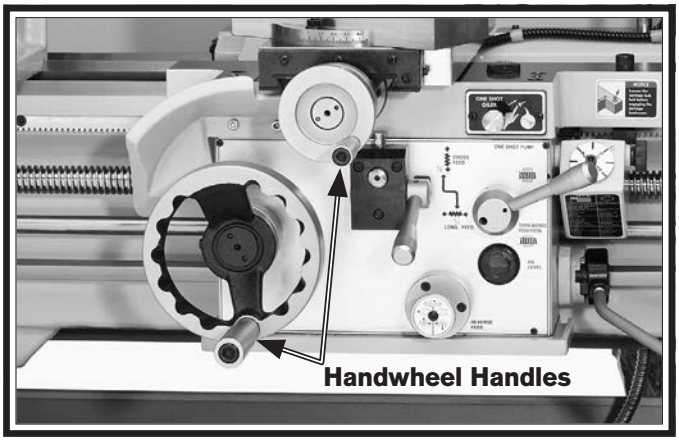

Figure 20. Handwheel handles installed.

Lubricating Lathe

The headstock, quick-change gearbox, and apron oil reservoirs must have the proper amount of oil in them before the lathe can be operated for the first time.

Damage caused to the bearings and gears from running the lathe without oil in the reservoirs will not be covered under warranty. Refer to the **Lubrication** section, beginning on **Page 68**, for details on how to check, add oil, and prime the headstock oil pump.

In addition to the reservoirs, we also recommend that you lubricate all other points on the machine at this time. This can be accomplished by following the maintenance schedule on **Page 66**.

Note: If this lathe was shipped with oil in the reservoirs, do not change that oil until after the test run and spindle break-in procedures.

Adding Coolant

Add the coolant of your choice now. For detailed instructions on where the coolant tank is located and how to add fluid, refer to **Coolant System Service** on **Page 74**.

Power Connection

After you have completed all previous setup instructions and circuit requirements, the machine is ready to be connected to the power supply.

Due to the complexity required for planning, bending, and installing the conduit necessary for a code-compliant hardwire setup, an electrician or qualified service personnel MUST perform this type of installation.

Hardwire setups typically require power supply wires to be enclosed inside of a solid or flexible conduit, which is securely mounted at both ends with the appropriate conduit fittings. All work must adhere to the required electrical codes.

The hardwire setup must include a locking disconnect switch (see **Figure 21**) between the power source and the machine. This switch serves as the means to completely disconnect the machine from power to prevent electrocution from accidental startup during adjustments, maintenance, or service to the machine.

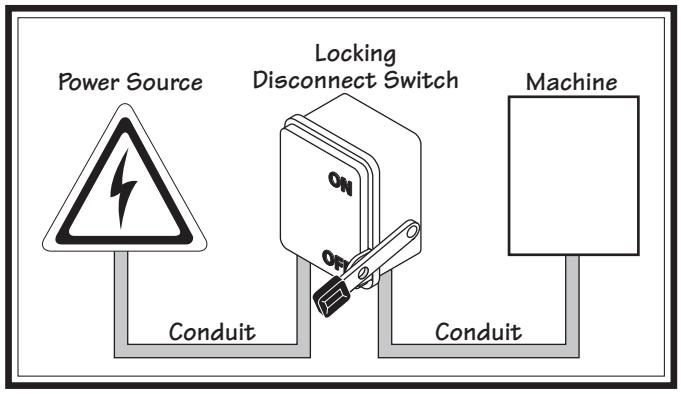

Figure 21. Typical hardwire setup with a locking disconnect switch.

⚠WARNING

Disconnect power supply! Electrocution could occur if you attempt this procedure with the power wires connected to the power source. The incoming power wires must be disconnected from power before performing this procedure.

Connecting Power

1. Make sure the master power switch is turned to the OFF position, then open the electrical cabinet door.

2. Refer to **Figure 22** to identify the master power switch and the hole at the bottom left for the incoming power supply.

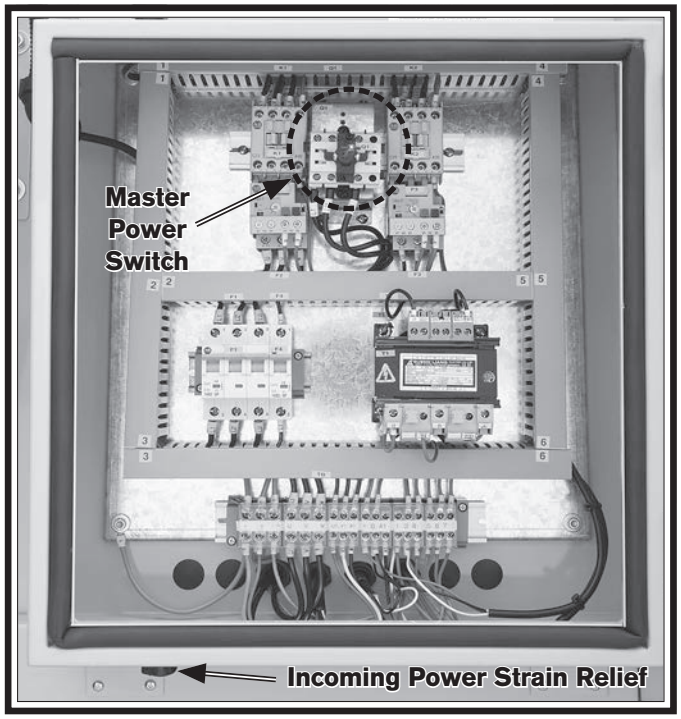

Figure 22. Electrical cabinet.

3. Connect the incoming hot wires to the master power switch terminals and connect the ground wire to the ground terminal, as illustrated in **Figure 23**.

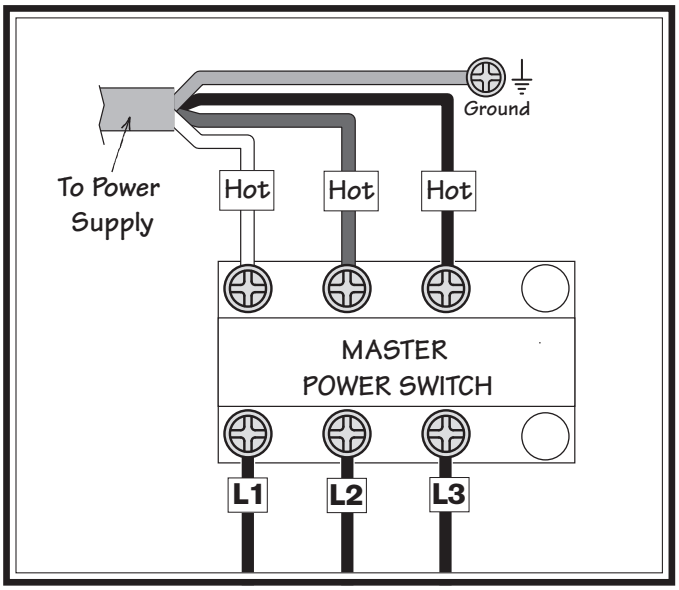

Figure 23. Power connection at master power switch.

4. Make sure the wires have enough slack so that they do not bind at the terminals.

5. Close and lock the electrical cabinet door.

NOTICE

To avoid unexpected start-up of lathe components, keep the master power switch turned OFF until instructed otherwise in the Test Run.

Test Run

After all preparation steps have been completed, the machine and its safety features must be tested to ensure correct operation. If you discover a problem with the operation of the machine or its safety components, shut the machine down, disconnect it from power, and do not operate it further until you have resolved the problem.

A **Troubleshooting** section is provided, starting on **Page 88**, to assist you with solutions if a problem occurs or if the lathe does not function as described in this section.

If you need additional help after reviewing the troubleshooting section, or you are not confident troubleshooting the machine on your own, contact our Tech Support at (360) 734-1540.

To test run your machine:

1. Make sure the master power switch (**Figure 24**) on the rear of the machine is turned ***OFF***.

Figure 24. Location of the master power switch.

2. Read and follow the safety instructions at the beginning of the manual, take all required safety precautions, and make sure all previous preparation steps discussed in this manual have been followed and completed.

3. Clear away all tools and objects used during assembly, lubrication, and preparation.

4. Make sure that the chuck and jaws, if installed, are secure (refer to **Chuck and Faceplate Mounting** on **Page 37**).

Note: If a chuck is not installed on the lathe, you do not need to install one for this test.

5. Push the STOP button on the control panel (see **Figure 25**), and point the coolant nozzle into the chip pan.

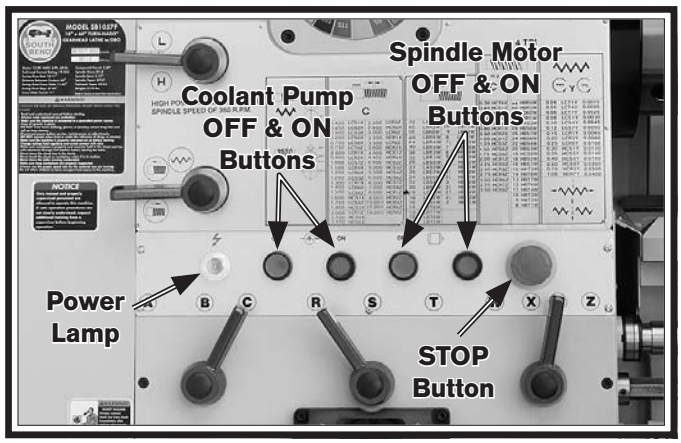

Figure 25. Control panel.

6. Move the spindle speed range lever (**Figure 26**) so that the colors of the 210–500 RPM range align with the colors on the stationary plate above the hub, then move the spindle speed lever so that the green arrow on the inner hub aligns with the green bar of the 210 RPM label.

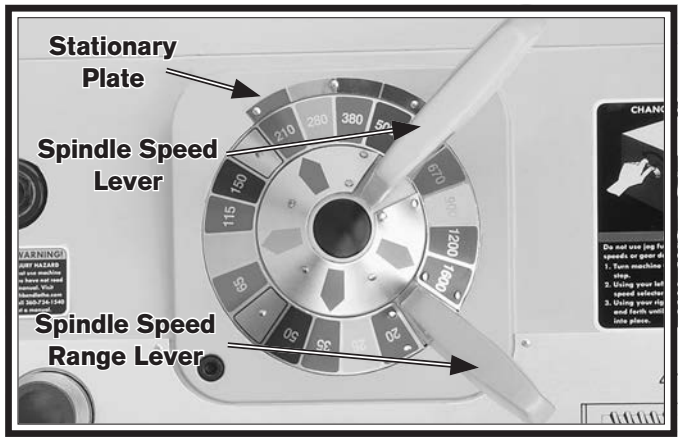

Figure 26. Spindle speed set at 210 RPM.

Note: You may need to rock the spindle back and forth by hand to get the gears to engage when using the lever.

7. Move the gearbox range lever on the headstock to the neutral (middle) position to disable power feed, as shown in **Figure 27**.

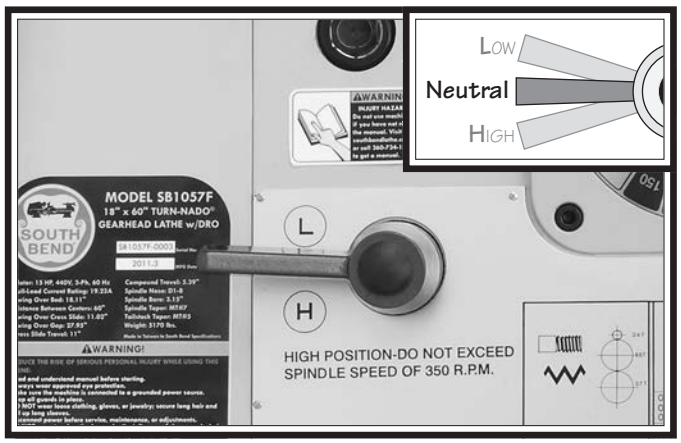

Figure 27. Gearbox range lever in neutral.

8. Pull up on the half nut and the feed ON/OFF levers (see **Figure 28**), then use the carriage handwheel to move the carriage back and forth to ensure that it is not engaged with the leadscrew or feed rod.

Note: Steps 7–8 will ensure that the carriage and cross slide do not unexpectedly move during the following steps.

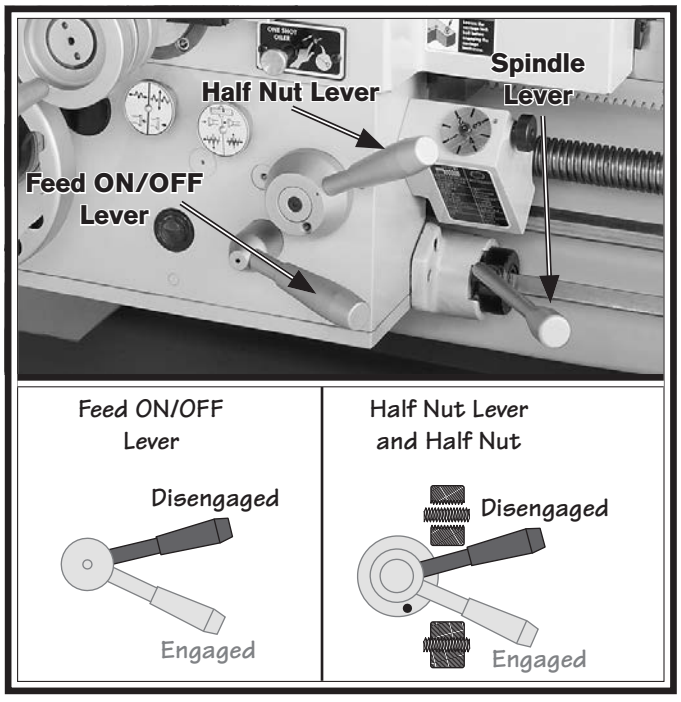

Figure 28. Apron controls for test run.

9. To prevent the spindle from rotating when power is applied to the motor, move the spindle lever to the OFF (middle) position (see **Figure 28**).

10. Turn the master power switch ***ON***, then reset the STOP button by twisting it clockwise until it pops out. The power lamp on the control panel should illuminate.

11. Push the spindle motor ON button and wait for the motor to reach full speed.

12. Verify that oil is flowing against the headstock sight glass shown in **Figure 29**.

Figure 29. Headstock oil sight glass.

— If oil flow is not visible in the sight glass, push the STOP button, disconnect the lathe from power, then make sure the oil tank is properly filled (see **Headstock** in the **Lubrication** subsection on **Page 68** for details).

— If the oil tank is correctly filled and oil flow is still not visible in the sight glass, disconnect the lathe from power and call Tech Support for help.

Note: The spindle clutch is tight when new and may require moderate pressure on the spindle lever to engage it until it is broken in.

13. Move the spindle lever down to start the spindle rotating counterclockwise (down toward the front of the lathe).

— If the spindle rotates in the opposite direction (clockwise), the power supply phase polarity may be incorrect. Refer to **Correcting Phase Polarity** on **Page 92** to resolve this.

14. Observe the lathe and listen for any abnormal noises or vibration. The lathe should run smoothly.

15. Move the spindle lever to the OFF (middle) position, let the spindle come to a complete stop, then move the lever up to reverse spindle rotation.

16. Push the STOP button. The spindle should come to a slow stop.

17. With the STOP button pushed in, attempt to start spindle rotation—the spindle should not start.

— If the spindle *does* start, the STOP button is not working properly. This safety feature must operate properly before continuing. Turn the master power switch ***OFF***, disconnect the lathe from power, then call Tech Support for help.

18. Move the spindle lever to the OFF (middle) position, reset the STOP button by twisting it clockwise until it pops out, push the spindle motor ON button, then restart spindle rotation by moving the spindle lever down again.

19. Press the foot brake. The spindle should come to a quick stop.

— If the foot brake has no effect on the stopping speed of the spindle, push the STOP button to stop the lathe, disconnect it from power, and call Tech Support for help.

20. Push the STOP button to prevent an accidental start-up.

21. Remove the end gear cover from the left side of the headstock. There is a safety switch that prevents the spindle from starting while this cover is removed.

22. Reset the STOP button, push the spindle motor ON button, stand away from all the exposed gears on the side of the headstock, then attempt to start spindle rotation—the spindle should *not* start.

— If the spindle *does* start with the end gear cover removed, the safety limit switch is not adjusted or operating correctly. This safety feature must operate properly before continuing. Press the STOP button to turn the lathe ***OFF***, disconnect it from power, and call Tech Support for help.

23. Push the STOP button in, move the spindle lever to the OFF (middle) position, push the spindle motor OFF button and wait for the V-belts to stop, then replace the end gear cover.

24. Reset the STOP button, press the spindle motor ON button, then lift the chuck guard up—this will activate the chuck guard safety switch to prevent spindle rotation. Attempt to start spindle rotation—the spindle should *not* start.

— If the spindle *does* start with the chuck guard in the up position, the safety switch is not adjusted or operating correctly. This safety feature must operate properly before continuing. Press the STOP button to turn the lathe ***OFF***, disconnect it from power, and call Tech Support for help.

25. Move the chuck guard back down into operating position.

26. Point the coolant nozzle down into the chip drawer and verify that there is coolant in the reservoir (refer to **Coolant System Service** on **Page 74** for detailed instructions).

27. Use the coolant pump switch on the control panel to start the pump, then open the valve at the base of the nozzle. Verify that the coolant flows from the nozzle, then close the valve and turn the pump ***OFF***.

Congratulations! The test run is complete. Perform the following **Spindle Break-In** procedure.

Spindle Break-In

Before subjecting the lathe to full loads, it is essential to complete the spindle break-in process as described below. This will ensure the best results and maximum life of the precision components inside the lathe.

The break-in procedure must be performed in succession with the **Test Run** procedure described in this manual, because many of the test run steps prepare the lathe controls for the break-in process.

Important: Do not perform the break-in procedure independently from the **Test Run** section—serious damage could occur to the lathe if the controls are set differently than instructed in that section.

NOTICE

Do not leave the lathe unattended during the Spindle Break-In procedure. If your attention is needed elsewhere during this procedure, stop the lathe and restart the procedure later from the beginning.

To perform the spindle break-in:

1. Successfully complete the **Test Run** procedure beginning on **Page 32**.

2. Using the spindle speed levers to set the spindle speed, run the lathe for ten minutes at each of the following speeds: 50, 150, 500, and 1600 RPM.

Note: If necessary, refer to **Setting Spindle Speed** on **Page 54** for detailed instructions.

3. Use the foot brake to stop spindle rotation, then reverse spindle rotation with the spindle lever, then run the lathe at 1600 RPM for 10 minutes.

4. Use the foot brake to stop spindle rotation, then run the lathe at 150 RPM for ten minutes with the gearbox range lever (**Figure 27**) on the headstock in the **L** (low) position, and then run the lathe for another ten minutes with the lever in the **H** (high) position.

5. While the oil is still warm and any metal particles may still be suspended in the oil, change the headstock and gearbox oil (refer to **Lubrication** beginning on **Page 68** for detailed instructions).

6. Check, and if necessary, re-tention the V-belts (refer to **V-Belts** on **Page 80** for detailed instructions).

Congratulations! The spindle break-in is complete.

Recommended Adjustments

For your convenience, the adjustments listed below have been performed at the factory. However, because of the many variables involved with transporting the machine during shipping, we recommend that you at least verify the following adjustments to ensure the best possible operational results from your new machine.

Step-by-step instructions for these adjustments can be found on the pages referenced below.

Factory adjustments that should be verified:

- Tailstock alignment (**Page 45**).
- Compound and cross slide backlash adjustment (**Page 77**).
- Gib adjustments (**Page 78**).

Operation Overview

The purpose of this overview is to provide the novice machine operator with a basic understanding of how the machine is used during operation, so they can more easily understand the controls discussed later in this manual.

Note: Due to the generic nature of this overview, it is not intended to be an instructional guide for performing actual machine operations. To learn more about specific operations and machining techniques, seek training from people experienced with this type of machine, and do additional research outside of this manual by reading "how-to" books, trade magazines, or websites.

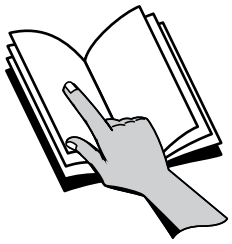

⚠WARNING

To reduce the risk of serious injury when using this machine, read and understand this entire manual before beginning any operations.

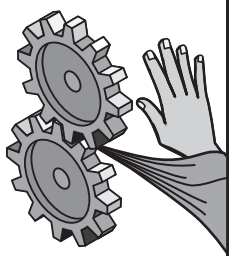

⚠WARNING

Loose hair, clothing, or jewelry could get caught in machinery and cause serious injury or death. Keep these items away from moving parts at all times to reduce this risk.

⚠WARNING

During operation, small metal chips may become airborne, leading to serious eye injury. Wear safety glasses to reduce this risk.

To complete a typical operation, the operator does the following:

1. Puts on safety glasses, rolls up sleeves, removes jewelry, and secures any clothing, jewelry, or hair that could get entangled in moving parts.
2. Examines the workpiece to make sure it is suitable for turning, then securely mounts the workpiece in one of the chucks or on the faceplate, and removes the chuck key from the chuck.
3. Mounts the tooling, aligns it with the workpiece, then backs it away to establish a safe startup clearance.
4. Clears all setup tools from the lathe.
5. Checks for safe clearances by rotating the workpiece by hand at least one full revolution.
6. Moves slides to where they will be used during operation.
7. Sets the correct spindle speed for the operation.
8. If using power feed, selects the proper feed rate for the operation.
9. Turns the master power switch ***ON***, resets the STOP button, presses the spindle motor ON button, then verifies there is oil flow visible in the headstock sight glass.
10. Uses the spindle lever to start spindle rotation.
11. Uses the carriage handwheels or power feed options to move the tooling into the workpiece for operations.
12. When finished cutting, moves the spindle lever to the OFF position, presses the foot brake to completely stop the spindle, then removes the workpiece.

Chuck & Faceplate Mounting

This lathe is equipped with a D1-type spindle nose. This type of spindle uses camlocks that are adjusted with a chuck key to securely mount a chuck or faceplate with repeatable precision and ease.

⚠WARNING

Never use spindle speeds faster than the chuck RPM rating or the safe limits of your workpiece. Excessive spindle speeds greatly increase the risk of the workpiece or chuck being thrown from the machine with deadly force!

This lathe ships with the 3-jaw chuck installed. This is a scroll-type chuck where all three jaws move in unison when the chuck key is used.

The included 4-jaw chuck features independent jaws, which are used for square or unevenly-shaped stock, and to mount work that needs to be adjusted to near zero total indicated runout.

If neither chuck can hold your workpiece, the cast iron faceplate has slots for T-bolts that hold standard or custom clamping hardware. With the correct clamping hardware, this faceplate will hold non-cylindrical parts.

Installation & Removal Devices

Because chucks are heavy and often awkward to hold, some kind of lifting, support, or protective device should be used during installation or removal. The weight and size of the chuck will determine the appropriate device to use (refer to the following figure for examples).

⚠WARNING

A dropped chuck can cause amputation, serious crushing injuries, or property damage. Always use a lifting, support, or protective device to reduce this risk when installing or removing a chuck.

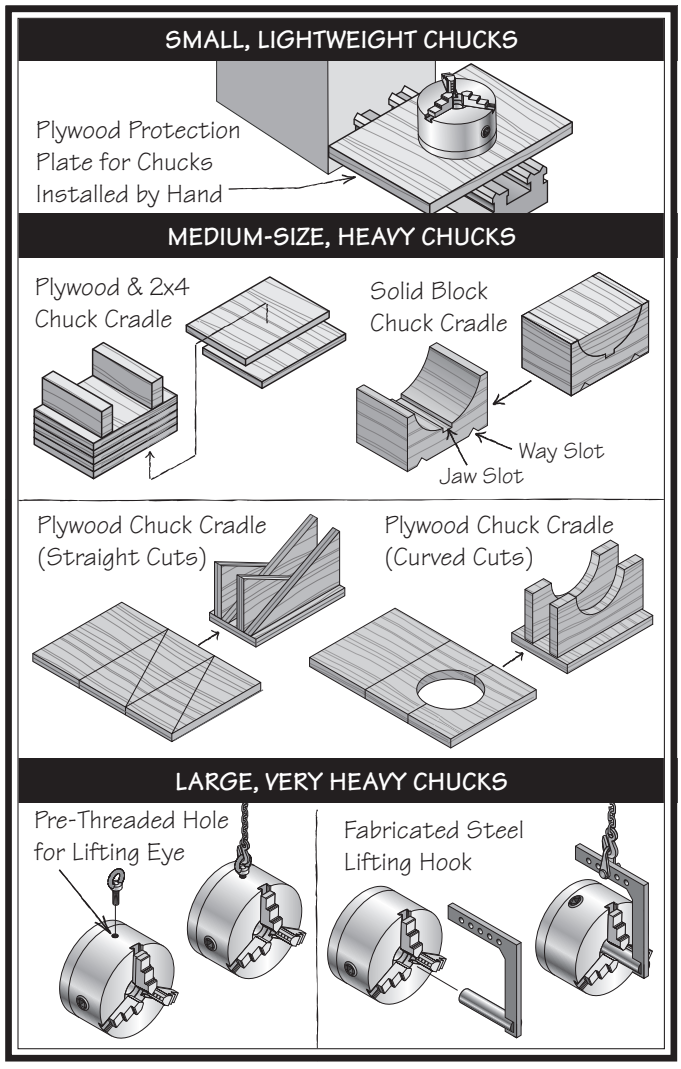

Figure 30. Examples of common devices used during chuck installation and removal.

Chuck Installation

To ensure accurate work, it is extremely important to make sure the spindle nose and chuck mating surfaces/tapers are clean. Even a small amount of lint or debris can affect accuracy.

The chuck is properly installed when all camlocks are tight, the spindle and chuck tapers firmly lock together, and the back of chuck is firmly seated against the face of the spindle all the way around—without any gaps.

To install the chuck:

1. DISCONNECT LATHE FROM POWER!

2. Use an appropriate lifting, support, or protective device to protect the ways and support the chuck during the installation process.

3. Clean and lightly oil the camlock studs, then thoroughly clean the mating surfaces of the spindle and chuck.

4. Install the chuck by inserting the camlock studs straight into the spindle cam holes.

Important: Avoid inserting the studs by pivoting them in from an angle or rotating the spindle. This can damage studs or spindle cam holes.

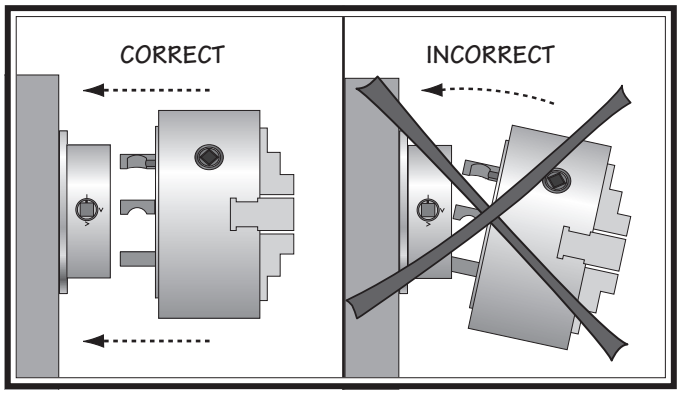

Figure 31. Inserting camlock studs into spindle cam holes.

5. Incrementally tighten the camlocks in a criss-cross or star pattern to ensure that the chuck seats evenly against the spindle.

6. When the chuck is fully seated and all the camlocks are tight, verify that the cam line is between the two "V" marks on the spindle nose, as shown in the following figure.

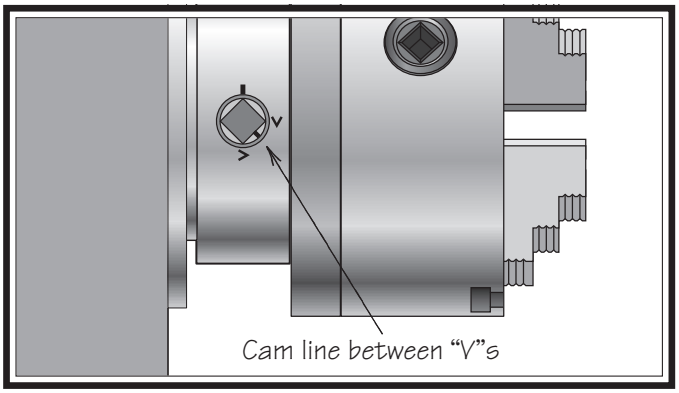

Figure 32. Cam line positioned between the "V" marks after the camlocks are fully tightened.

— If the cam line is NOT between the "V" marks when the camlock is tight, the stud may be installed at the incorrect height. To fix this, adjust the stud height as shown in the following figure. Make sure to re-install the stud cap screw afterward.

— If adjusting the stud height does not correct the problem, try swapping stud positions on the chuck.

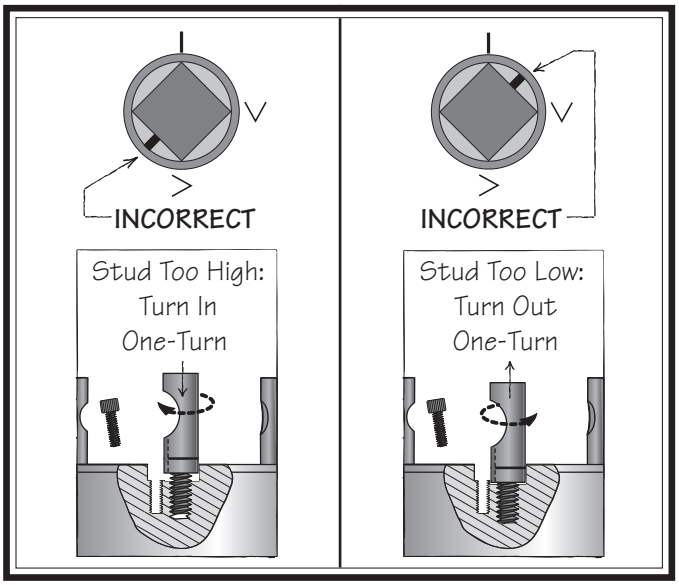

Figure 33. Correcting an improperly installed stud.

7. Verify that the chuck fits the spindle properly by checking for any gaps between the mating surfaces.

— If there are no gaps, proceed to **Step 8**.

— If there is a gap, remove the chuck, re-clean the mating surfaces carefully, and re-install. If the problem persists, contact our Tech Support.

8. Verify that the chuck/spindle tapers are seated firmly together by removing the chuck, per the **Chuck Removal** instructions, and pay close attention to how easily the tapers release.

— If it was necessary to bump the chuck or use a mallet to release the tapers, then they are seating together properly.

— If the tapers released easily with little intervention, they are not seated together firmly as required. Remove the chuck, re-clean the mating surfaces carefully, and re-install. If the problem persists, contact our Tech Support.

Registration Marks

Lightly stamp registration marks across the mating seams of chuck components. These marks will help you re-install the chuck in the same position after removal, which ensures consistent chuck balance and turning results, and allows the same camlocks and studs to operate together for consistent locking and unlocking.

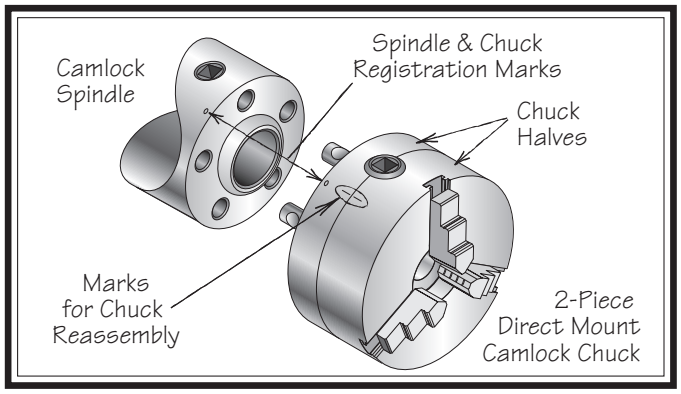

Figure 34. Registration mark locations.

Chuck Removal

To remove the chuck:

1. DISCONNECT LATHE FROM POWER!

2. Use an appropriate lifting, support, or protective device to protect the ways and support the chuck (refer to **Installation & Removal Devices** on **Page 37**).

3. Loosen the camlocks by turning the key counterclockwise until each of the cam lines are aligned with its corresponding spindle mark (see **Figure 35**).

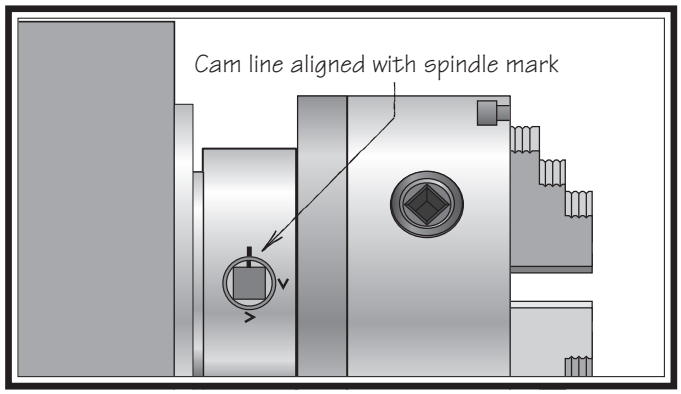

Figure 35. Camlock is fully loosened when the cam line is aligned with the spindle mark.

Tip: Camlocks can become very tight. A cheater pipe may be used as a last resort to add leverage when loosening. After loosening, you may need to wiggle the chuck key in the camlock to fully disengage the stud.

4. Using a dead blow hammer or other soft mallet, lightly tap around the outer circumference of the chuck body to loosen it from the spindle.

5. Remove the chuck from the spindle, using a light rocking motion to carefully slide the studs out of the cam holes.

— If the chuck does not immediately come off, rotate it approximately 60° and tap it again. Make sure all the marks on the cams and spindle are in proper alignment for removal.

Scroll Chuck Clamping

This scroll-type chuck has an internal scroll-gear that moves all jaws in unison when adjusted with the chuck key. This chuck will hold cylindrical parts on-center with the axis of spindle rotation and can be rotated at high speeds if the workpiece is properly clamped and balanced.

Never mix jaw types or positions to accommodate an odd-shaped workpiece. The chuck will spin out of balance and may throw the workpiece! Instead, use an independent jaw chuck or a faceplate.

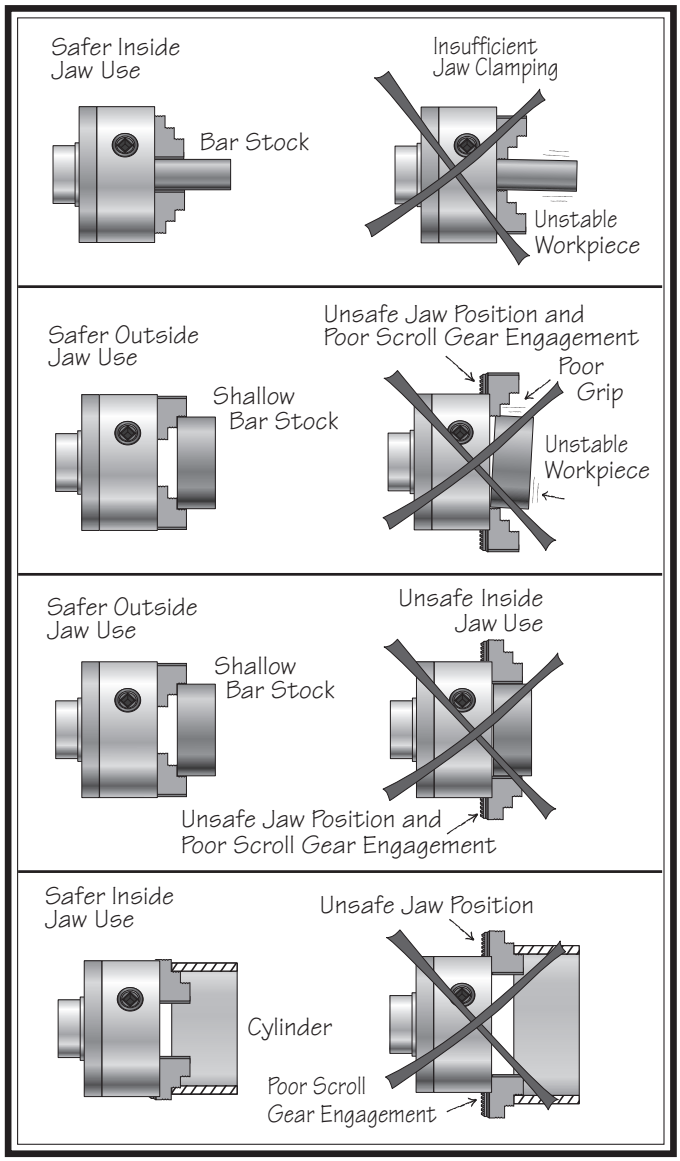

Figure 36. Jaw selection and workpiece holding.

4-Jaw Chuck

Refer to the **Chuck Installation** (see **Page 38**) and **Chuck Removal** (see **Page 39**) instructions to install or remove the 4-jaw chuck.

The 4-jaw chuck features independently adjustable hardened steel jaws for holding non-concentric or off-center workpieces. Each jaw can be independently removed from the chuck body and reversed for a wide range of work holding versatility.

⚠WARNING

Because of the dynamic forces involved in machining a non-concentric or off-center workpiece, always use a low spindle speed to reduce risk of the workpiece coming loose and being thrown from the lathe, which could cause death or serious personal injury.

Mounting Workpiece

1. DISCONNECT LATHE FROM POWER!
2. Place a chuck cradle or plywood on the bedway below the chuck to protect the bedway surfaces.
3. Use the chuck key to open each jaw so the workpiece will lay flat against the chuck face, jaw steps, or into the spindle opening.
4. With help from another person or a holding device, position the workpiece so it is centered in the chuck.

5. Tighten each jaw in small increments. After you have adjusted the first jaw, continue tightening the remaining jaws in an opposing sequence, as shown by the sequential order in **Figure 37**.

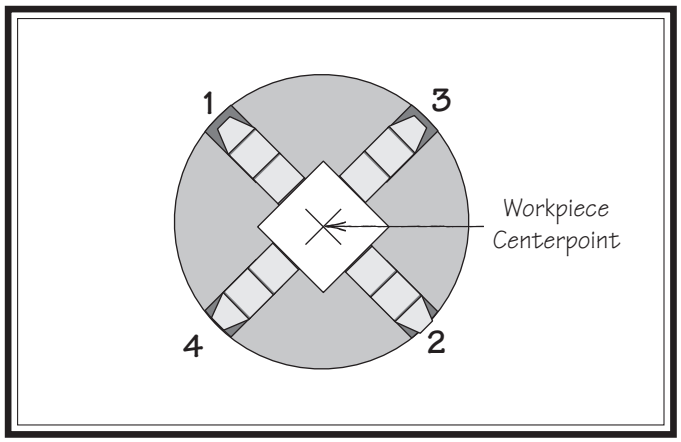

Figure 37. 4-jaw tightening sequence.

6. After the workpiece is held in place by the jaws, use a dial indicator to make sure the workpiece is centered in the chuck.

— If the workpiece is not correctly centered, make fine adjustments by slightly loosening one jaw and tightening the opposing jaw until the workpiece is correctly positioned (see **Figure 38** for an example).

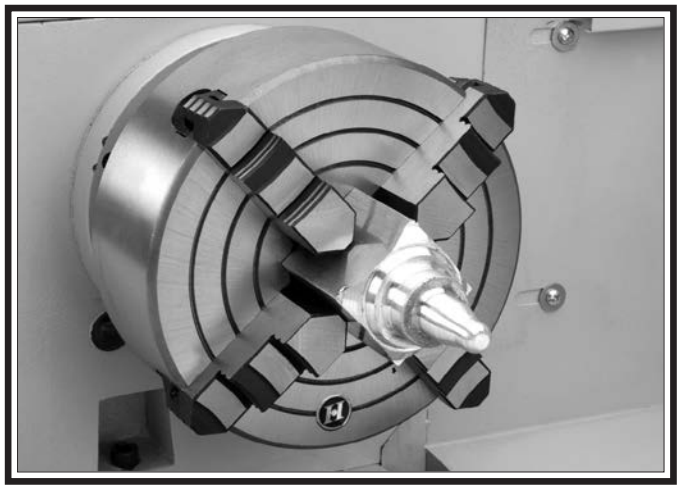

Figure 38. Example photo of non-cylindrical workpiece correctly mounted on the 4-jaw chuck.

Faceplate

Refer to the **Chuck Installation (Page 38)** and **Chuck Removal (Page 39)** instructions to install or remove the faceplate.

The faceplate included with your lathe can be used for a wide range of operations, including machining non-concentric workpieces, straight turning between centers, off-center turning, and boring.

The tools needed for mounting a workpiece will vary depending on the type of setup you have.

⚠WARNING

Machining non-concentric workpieces at a high speed could cause the workpiece to be thrown from the spindle with deadly force at the operator or bystanders. To reduce this risk, only machine non-concentric workpieces at low speeds and clamp counter-weights to the faceplate to balance it.

⚠WARNING

Failure to properly secure a workpiece to the faceplate could cause the workpiece to be thrown from the lathe with deadly force at the operator or bystanders. Use a minimum of THREE independent clamping devices to hold the workpiece onto the faceplate.

To mount a non-concentric workpiece to the faceplate:

1. DISCONNECT LATHE FROM POWER!

2. Protect the bedway with a piece of plywood.

3. With help from another person or a holding device to support the workpiece, position it onto the faceplate and clamp it in place with a minimum of three independent clamping devices (see **Figure 39** for an example).

   Be sure to take into account the rotational and cutting forces that will be applied to the workpiece when clamping it to the faceplate. If necessary, use counter-weights to balance the assembly and use a dial indicator to make sure that the workpiece is properly positioned for your operation.

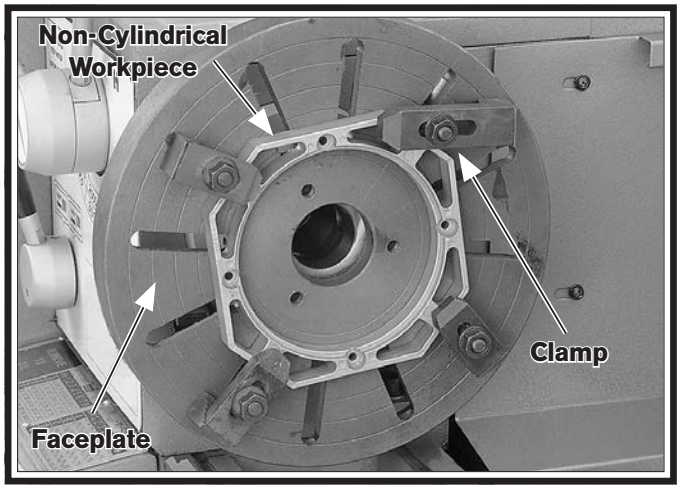

Figure 39. Example photo of workpiece clamped in a faceplate.

Tailstock

The tailstock (see **Figure 40**) is typically used to support long workpieces by means of a live or dead center (refer to **Centers** on **Page 46**). It can also be used to hold a drill or chuck to bore holes in the center of a part. Custom arbors and tapers can also be cut on your lathe by using the offset tailstock adjustment.

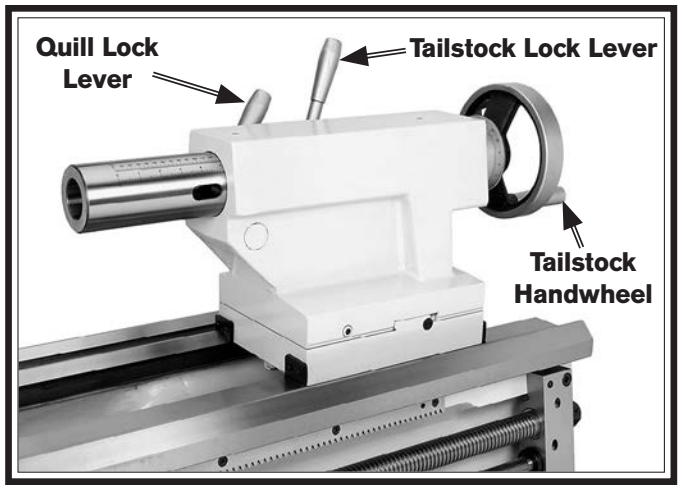

Figure 40. Tailstock and quill lock levers in locked position.

Graduated Dial

Increments.....0.001"
One Full Revolution.....0.100"

Increments on Quill

Inch ..... 0"-6" in ⅛" Increments
Metric..... 0–160mm in 1mm Increments

Positioning Tailstock

1. Pull the tailstock lock lever backward (away from the spindle) to unlock the tailstock from the bedway.

2. Slide the tailstock to the desired position.

3. Push the tailstock lock lever forward (toward the spindle) to lock the tailstock against the bedway.

Using Quill

1. Move the quill lock lever toward the spindle to unlock the quill.

2. Turn the tailstock handwheel clockwise to move the quill toward the spindle or counterclockwise to move it away from it.

3. Move the lock lever away from the spindle to secure the quill in place.

Installing Tooling

This tailstock uses a quill with an MT#5 taper that has a lock slot in the back of the bore that accepts tang arbors and drill bits (see **Figures 41–42** for examples).

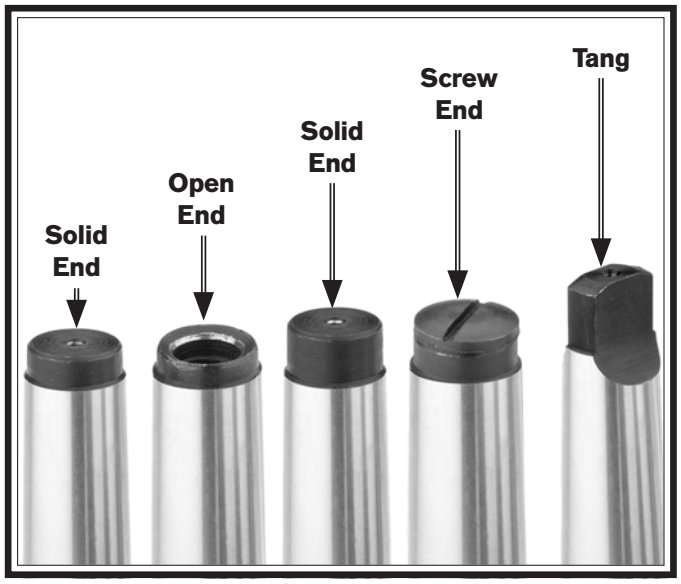

Figure 41. Types of tapered arbors and tooling.

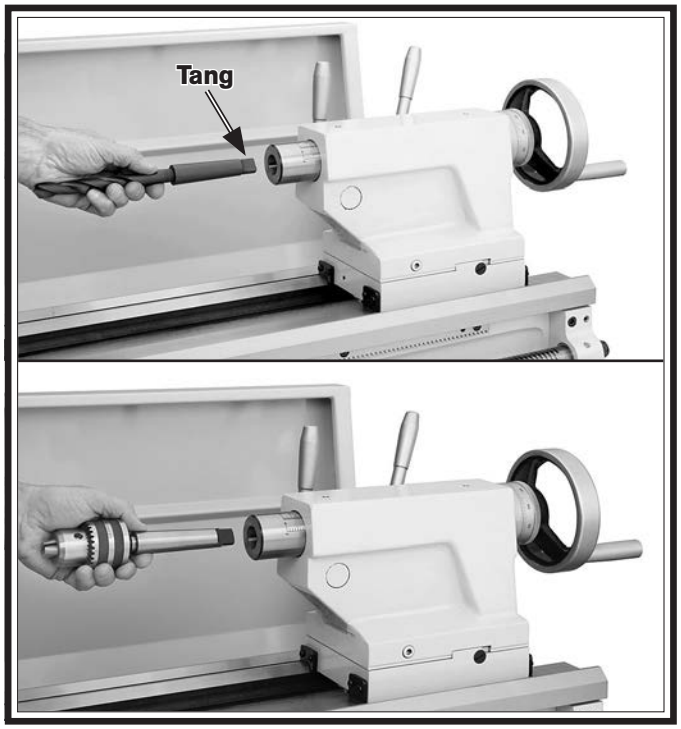

Figure 42. Example photos of inserting MT#5 tools with tangs into the tailstock.

However, other tooling without tangs, such as the four remaining tools shown in **Figure 41**, can still be used if the potential load will not exceed the strength of the tapered fit. For example, this includes smaller drill chucks, drill bits, and centers.

Note: If the tooling has an open hole in the end but is too short to be exposed in the drift slot for removal, then a screw can be threaded into the end of the tool to provide a solid surface for the quill pin to push against when the quill is retracted for tool removal. Otherwise, removal of such tooling may be difficult.

To install tooling in the tailstock:

1. With the tailstock locked in place, unlock the quill, then use the handwheel to extend it approximately 1".

2. Thoroughly clean and dry the tapered mating surfaces of the quill and the center, making sure that no lint or oil remains on the tapers.

Note: If the tapered tool shaft has a tang, align it with the slot in the back of the quill before seating it.

3. With a firm and quick motion, insert the tool into the quill. Check to see if it is firmly seated by attempting to twist it—a firmly seated tool will not twist.

4. Unlock the tailstock and move it until the tip of the tool is close to, but not touching, the workpiece, then re-lock the tailstock.

5. Start spindle rotation, unlock the quill, then turn the tailstock handwheel clockwise to feed the tool into the workpiece.

Removing Tooling

1. Use a shop rag to hold the tool.

2. Rotate the tailstock handwheel counterclockwise until the tool is forced out of the quill.

   — If the tool does not come loose by retracting the quill, extend the quill and use a drift key in the slot shown in **Figure 43** to remove the tool.

Figure 43. Drift key slot in the side of the quill.

Offsetting Tailstock

The tailstock can be offset from the spindle centerline for turning tapers. Move the tailstock top casting toward the front of the lathe to machine a taper at the tailstock end. Conversely, position the tailstock top casting toward the back of the lathe to machine a taper at the spindle end.

Note: The marks on the offset indicator are arbitrary. For a precise offset, use a dial indicator to check quill movement while adjusting the screws.

Tools Needed	Qty
Hex Wrench 6mm	1
Wrench 17mm	1

To offset the tailstock:

1. Loosen the hex bolts underneath both ends of the tailstock to release the clamping pressure between the top and bottom castings (see **Figure 44**).

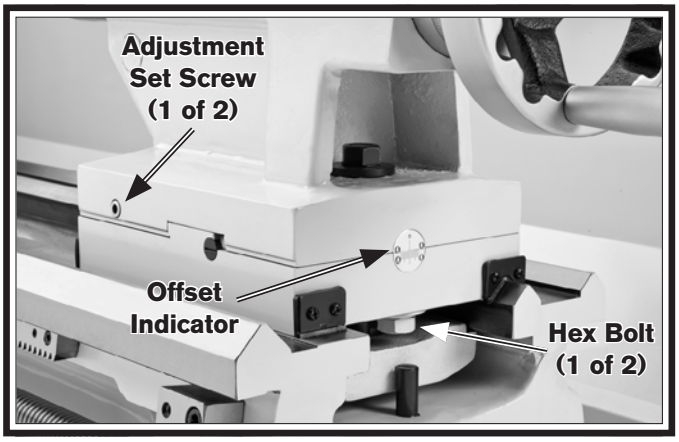

Figure 44. Tailstock offset controls.

2. Rotate the adjustment set screws in opposite directions for the desired offset (see the illustration in **Figure 45**).

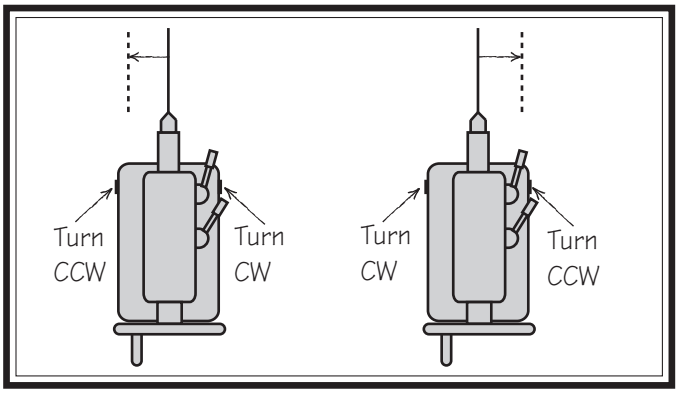

Figure 45. Set screw adjustment in relation to tailstock movement.

3. Retighten the clamping hex bolts underneath the tailstock to secure the offset.

Aligning Tailstock to Spindle Centerline

This is an essential adjustment that should be verified or performed each time the tailstock is used to turn concentric workpieces between centers or immediately after offsetting the tailstock when turning a taper. If the tailstock is not aligned with the spindle centerline when it is supposed to be, turning results will be inaccurate along the length of the workpiece.

Items Needed	Qty
Hex Wrench 6mm	1
Wrench 17mm	1
Round Stock 2" x 6"	2
Precision Level	1

To align the tailstock to the spindle centerline:

1. Use the precision level to make sure the bedway is level from side-to-side and from front-to-back.

   — If the bedway is not level, correct this condition before continuing with this procedure (refer to **Leveling & Mounting** on **Page 28**).

2. Center drill both ends of one piece of round stock, then set it aside for use in **Step 5**.

3. Use the other piece of round stock to make a dead center, and turn it to a 60° point, as illustrated in **Figure 46**.

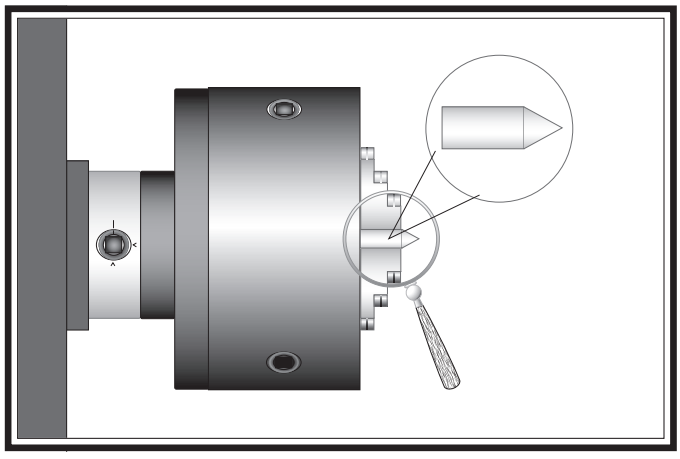

Figure 46. Turning a dead center.

Note: As long as this dead center remains in the chuck, the point of the center will remain true to the spindle centerline. The point will have to be refinished whenever the center is removed and then returned to the chuck.

4. Install a center in the tailstock.

5. Attach a lathe dog to the test stock from **Step 2**, then mount it between the centers (see **Figure 47** for an example).

Figure 47. Example photo of stock mounted between the centers.

6. Turn 0.010" off the stock diameter.

7. Mount a test or dial indicator so that the plunger is on the tailstock quill.

Note: If necessary in the following step, refer to **Offsetting Tailstock** on **Page 44** for detailed instructions.

8. Use calipers to measure both ends of the workpiece.

— If the test stock is *thicker* at the tailstock end, move the tailstock toward the *front* of the lathe ½ the distance of the amount of taper (see **Figure 48**).

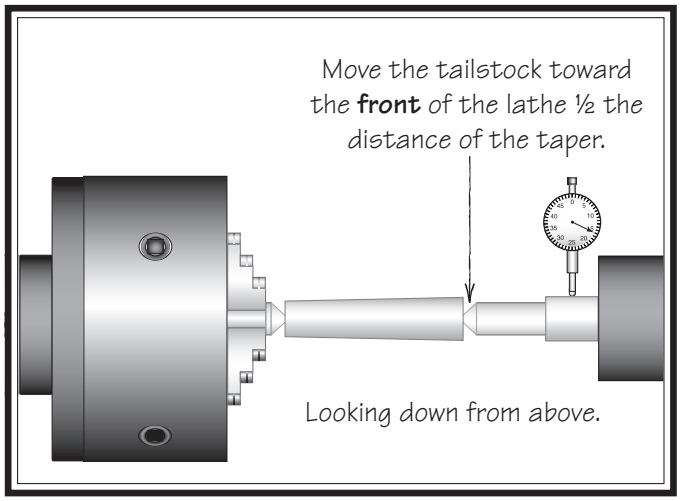

Figure 48. Adjust tailstock toward the operator.

— If the test stock is *thinner* at the tailstock end, move the tailstock toward the *back* of the lathe ½ the distance of the amount of taper (see **Figure 49**).

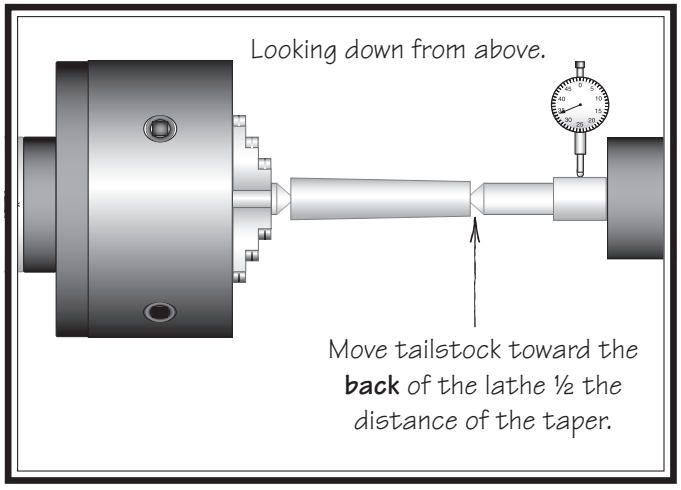

Figure 49. Adjust tailstock away from the operator.

9. Repeat **Steps 6–8** until the desired accuracy is achieved.

Centers

Figure 50 shows the MT#5 dead centers included with the lathe. In addition, an MT#7–MT#5 tapered spindle sleeve is included for mounting centers in the spindle.

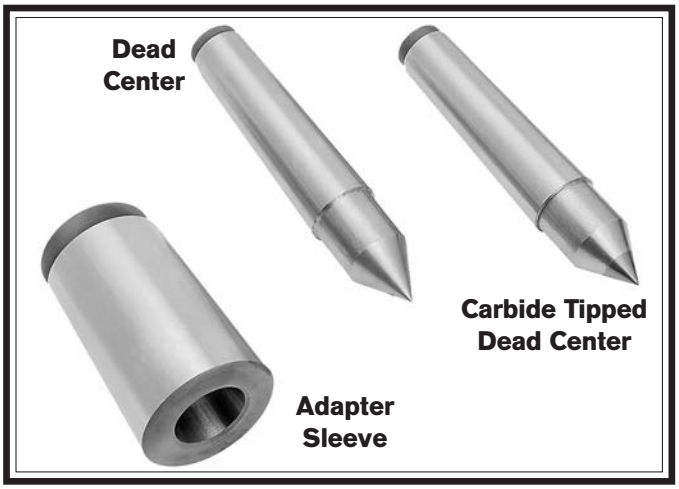

Figure 50. Adapter sleeve and dead centers.

Dead Centers

A dead center is a one-piece center that does not rotate with the workpiece and is used to support long, slender workpieces

Use the dead center in the spindle for operations where the workpiece rotates with the center and does not generate friction.

The carbide-tipped dead center can better withstand the effects of friction and is best used in the tailstock where the workpiece will rotate against it. The tip of the center must be generously lubricated during the operation to avoid premature wear and maximize smooth operation. Using low spindle speeds will also reduce the heat and wear from friction.

Live Centers

A live center has bearings that allow the center tip and the workpiece to rotate together; it can be installed in the spindle and the tailstock quill for higher speeds. However, a live center typically does not provide the same level of rigidity as a dead center, and final workpiece accuracy can suffer as a result.

Mounting Dead Center in Spindle

1. DISCONNECT LATHE FROM POWER!

2. Thoroughly clean and dry the tapered mating surfaces of the spindle bore, adapter sleeve, and the center, making sure that no lint or oil remains on the tapers.

Note: This will prevent the tapered surfaces from seizing due to operational pressures, which could make it very difficult to remove the center.

3. Mount a chuck or faceplate onto the spindle, whichever is correct for your operation.

4. Insert the center into the sleeve, then insert the sleeve into the spindle bore through the chuck or faceplate.

   Figure 51 shows an example photo of a dead center installed in the spindle, using a lathe dog and faceplate for turning between centers.

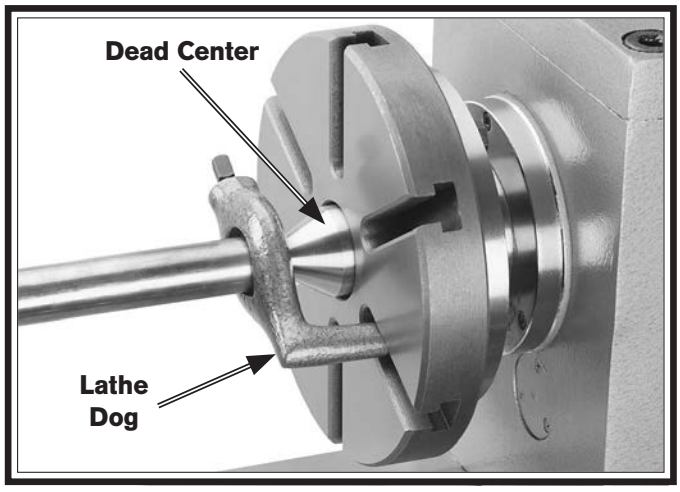

Figure 51. Example photo of using a dead center with a faceplate and lathe dog.

Removing Center from Spindle

To remove the sleeve and center from the spindle, insert a piece of round bar stock or similar tool through the outboard end (on the left side of the headstock). Have another person hold onto the sleeve and center with a gloved hand or shop rag, then tap the sleeve loose.

NOTICE

To avoid premature wear of the dead center or damage to the workpiece, use low spindle speeds and keep the tip of the dead center mounted in the tailstock well lubricated.

Mounting Center in Tailstock

Either a carbide-tipped dead center or live center can be used in the tailstock. Mounting instructions are the same for both. **Figure 52** shows an example photo of a dead center mounted in a tailstock.

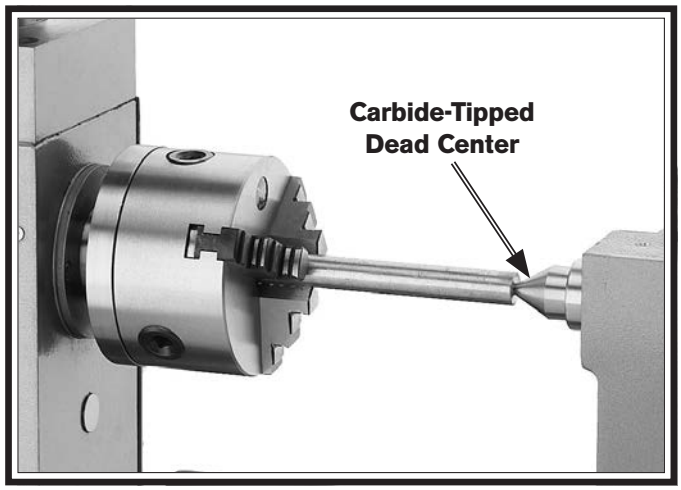

Figure 52. Example photo of using a carbide-tipped dead center installed in the tailstock.

To mount a center in the tailstock:

1. DISCONNECT LATHE FROM POWER!

2. Thoroughly clean and dry the tapered mating surfaces of the tailstock quill bore and the center, making sure that no lint or oil remains on the tapers.

3. Use the tailstock handwheel to feed the quill out from the casting approximately 1".

Note: Do not extend the quill more than 2" or stability and accuracy will be reduced.

4. Insert the center into the tailstock quill.

5. Seat the center firmly into the quill during workpiece installation by rotating the quill handwheel clockwise to apply pressure, with the center engaged in the center hole in the workpiece.

Note: Only apply enough pressure with the tailstock quill to securely mount the workpiece between centers. Avoid overtightening the center against the workpiece, or it may become difficult to remove later, and it will result in excessive friction and heat, which may damage the workpiece and center.

Removing Center from Tailstock

To remove the center from the quill, hold onto it with a gloved hand or shop rag, then rotate the tailstock handwheel counterclockwise to draw the quill back into the casting until the center releases.

If the center does not come loose by retracting the quill, extend the quill to expose the slot shown in **Figure 53**, then use a drift key to remove the center.

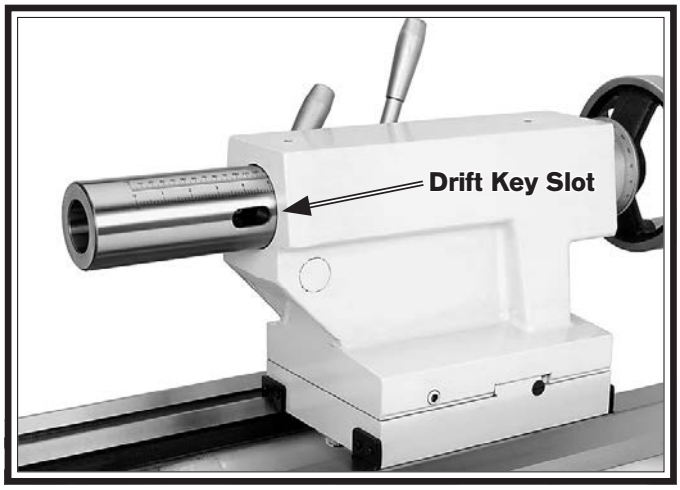

Figure 53. Drift key slot in the side of the quill.

Mounting Workpiece Between Centers

1. DISCONNECT LATHE FROM POWER!

2. Drill center holes in both ends of the workpiece.

3. Install a dead center in the spindle with a lathe dog and a chuck or faceplate, then install a live center or carbide-tipped dead center in the tailstock.

4. Lubricate the workpiece center holes, then mount the workpiece between the centers and hold it in place with light pressure from the tailstock center.

5. Seat the center firmly into the quill by rotating the tailstock handwheel clockwise to apply pressure against the workpiece (see the example in **Figure 54**).

   Only apply enough pressure to securely mount the workpiece between centers. Avoid over-tightening the center against the workpiece, or it may become difficult to remove later. Also, over-tightening will result in excessive friction and heat, which may damage the workpiece or center.

Figure 54. Example photo of a workpiece mounted between the centers.

Steady Rest

The steady rest supports long shafts and can be mounted anywhere along the length of the bedway.

Familiarize yourself with the steady rest components shown in **Figure 55** to better understand its operation.

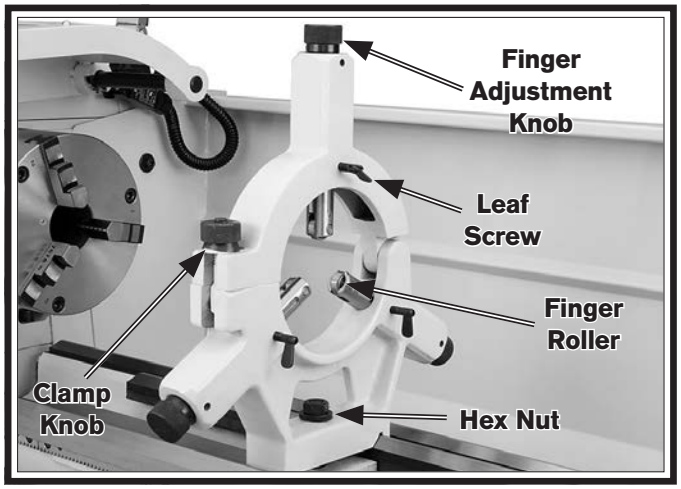

Figure 55. Steady rest components.

To install and use the steady rest:

1. DISCONNECT LATHE FROM POWER!

2. Thoroughly clean all mating surfaces, then place the steady rest base on the bedways so the triangular notch fits over the bedway prism.

3. Position the steady rest where required to properly support the workpiece, then tighten the hex nut shown in **Figure 55** to secure it in place.

4. Loosen the clamp knob that secures the two halves of the steady rest and open the top portion, as shown in **Figure 56**.

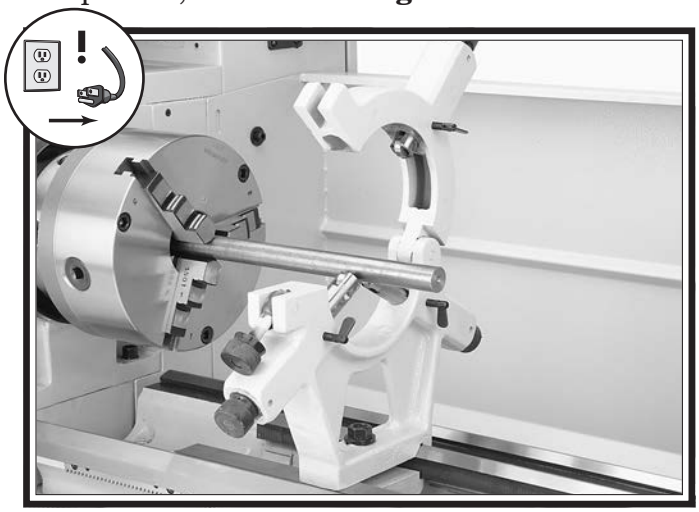

Figure 56. Workpiece mounted in the steady rest.

5. Loosen the three leaf screws so the finger roller positions can be adjusted.

6. Use the finger adjustment knobs to position the bottom two finger rollers against the workpiece, as shown in the example of **Figure 56**.

7. Close the steady rest, then use the finger adjustment knobs to adjust all three finger rollers so that they just touch the workpiece without causing deflection.

Note: The finger rollers should properly support the workpiece along the spindle centerline while still allowing it to freely rotate.

8. Tighten the three leaf screws to secure the settings.

Follow Rest

The follow rest mounts to the saddle with two cap screws (see **Figure 57**). It is used on long, slender parts to prevent workpiece deflection from the pressure of the cutting tool during operation. Adjust the follow rest fingers in the same manner as the those on the steady rest.

Note: To reduce the effects of friction, lubricate the brass finger tips with generous lubricant during operation.

Figure 57. Follow rest attachment.

Carriage & Compound Rest Locks

The carriage and compound rest have locks that can be tightened to provide additional rigidity during operation, especially during heavy cuts.

See **Figure 58** to identify the locations of the locks for each device.

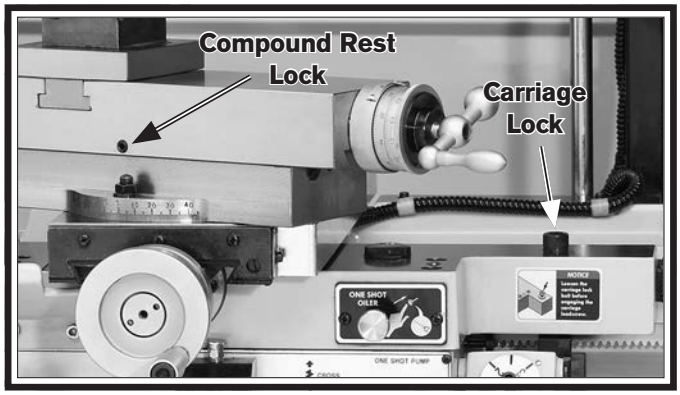

Figure 58. Compound rest and carriage locks.

Compound Rest

The compound rest handwheel has an indirect-read graduated scale. This means that the distance shown on the scale represents the actual distance the cutting tool moves. The base of the compound rest has another graduated scale used for setting the cutting tool to a specific angle.

Graduated Dial

Increments	0.001" (0.02mm)
One Full Revolution	0.100" (2.54mm)

Tool Needed	Qty
Wrench 14mm	1

To set the compound rest at a certain angle:

1. Loosen the two acorn nuts at the base of the compound rest (1 of 2 shown in **Figure 59**).

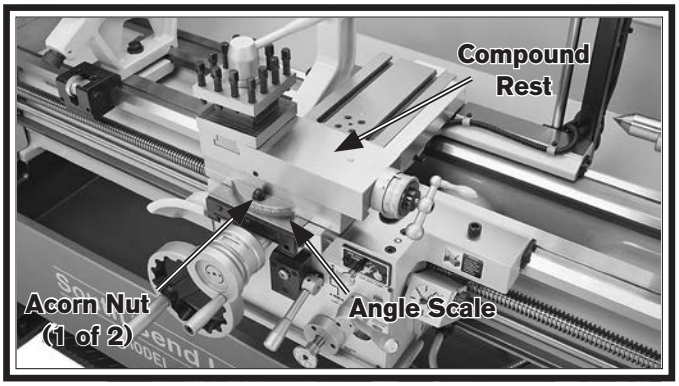

Figure 59. Compound rest.

2. Rotate the rest to the desired angle, as indicated by the scale at the base, then retighten the two acorn nuts.

Tip: The first time you set the angle of the compound rest for cutting threads, mark the location on the cross slide as a quick reference point. This will allow you to quickly return the compound rest to that exact angle the next time you need to cut threads.

Four-Way Tool Post

The four-way tool post is mounted on top of the compound rest and allows a maximum of four tools to be loaded simultaneously.

Each tool can be quickly indexed to the workpiece by loosening the top handle, rotating the tool post to the desired position, then re-tightening the handle to lock the tool into position.

Installing Tool

Tool Needed	Qty
Tool Post T-Wrench	1

To install a tool in the tool post:

1. Adjust the tool post bolts so that the cutting tool can fit underneath them (see **Figure 60**).

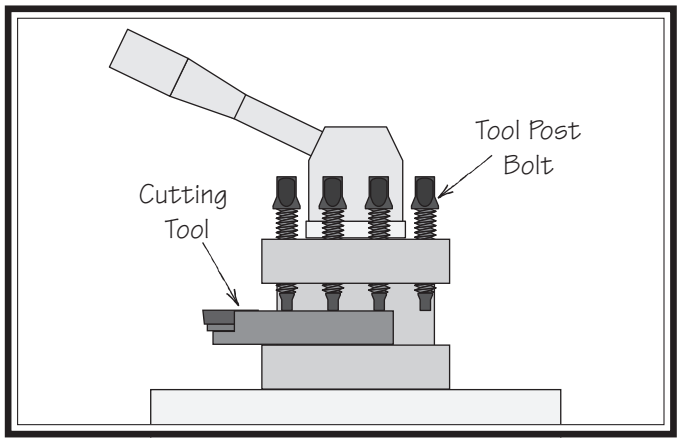

Figure 60. Example of tool mounted in tool post.

⚠WARNING

Over-extending a cutting tool from the post will increase the risk of tool chatter, breakage, or tool loosening during operation, which could cause metal pieces to be thrown at the operator or bystanders with great force. DO NOT extend a cutting tool more than 2.5 times the width of its cross-section or less (e.g, 2.5 x 0.5" = 1.25").

2. Firmly secure the cutting tool with at least two tool post bolts.

3. Check and adjust the cutting tool to the spindle centerline, as instructed in the next subsection.

Aligning Cutting Tool with Spindle Centerline

For most operations, the cutting tool tip should be aligned with the spindle centerline, as illustrated in **Figure 61**.

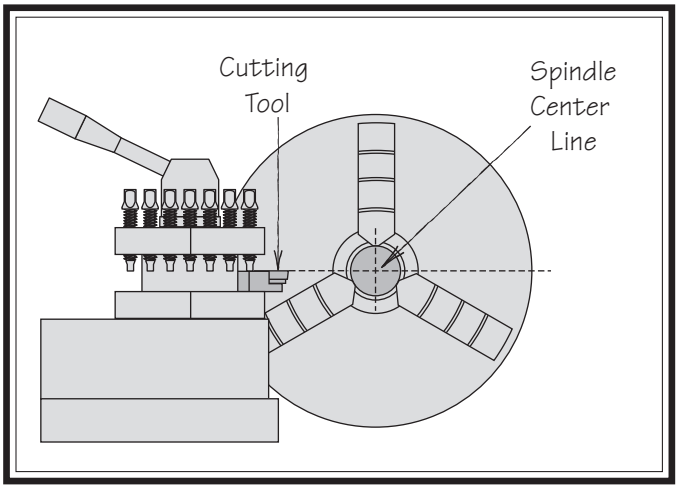

Figure 61. Cutting tool aligned with spindle centerline (viewed from tailstock).

There are a number of ways to check and align the cutting tool to the spindle centerline. If necessary, you can raise the cutting tool by placing steel shims underneath it. The shims should be as long and as wide as the cutting tool to properly support it.

Below are two common methods:

- Align the tip of the cutting tool with a center installed in the tailstock, as instructed on the next page. For this to work, the tailstock must be aligned to the spindle centerline (refer to **Aligning Tailstock To Spindle Centerline** on **Page 45** for detailed instructions).

- Make a facing cut on a piece of round bar stock. If the tool is above or below the spindle centerline, a nub will be left in the center of the workpiece. Adjust the height of the tool, then repeat the facing cut to check the adjustment. Repeat as necessary until the center of the workpiece face is smooth.

Tools Needed	Qty
Tool Post T-Wrench	1
Steel Shims	As Needed
Cutting Tool	1
Fine Ruler	1
Tailstock Center	1

To align the cutting tool with the tailstock center:

1. Mount the cutting tool in the tool post, then secure the post so the tool faces the tailstock.

2. Install a center in the tailstock, and position the center tip near the cutting tool tip.

3. Lock the tailstock and quill in place.

4. Adjust the height of the cutting tool so that the tool tip is aligned vertically and horizontally with the center tip, as shown in **Figure 62**.

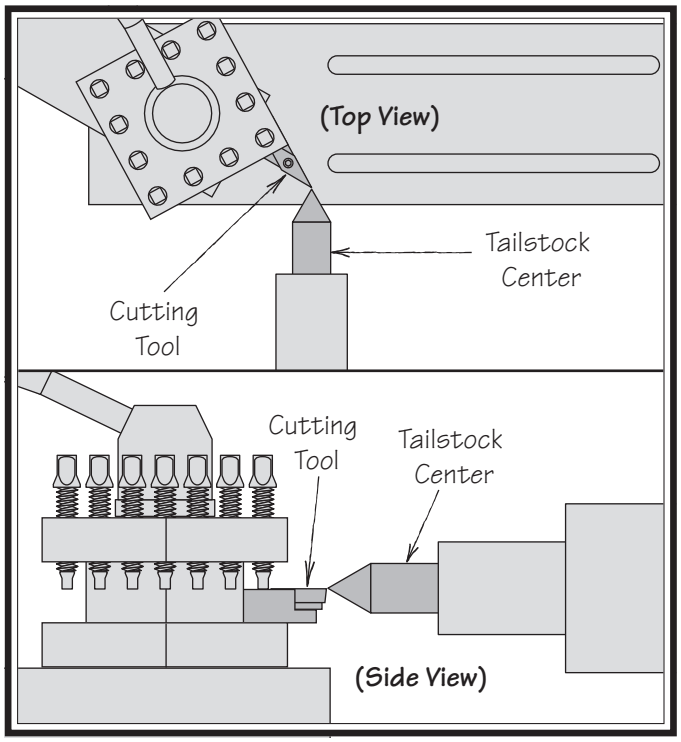

Figure 62. Cutting tool tip aligned with tailstock center.

Micrometer Stop

The micrometer stop is used to limit carriage travel for production runs or make final adjustments to the carriage position.

If power feed is being used and the carriage clutch is correctly adjusted, the carriage will disengage from the feed rod when it contacts the micrometer stop and movement will stop. Refer to **Carriage Feed Clutch Knob** on **Page 56** for detailed instructions on adjusting the carriage clutch.

NOTICE

The micrometer stop is not designed to stop carriage movement when the leadscrew is engaged for threading operations—doing so may damage the micrometer stop or lathe components.

Tools Needed	Qty
Hex Wrench 8mm	1

To set the micrometer stop:

1. DISCONNECT LATHE FROM POWER!

2. Loosen the cap screws shown in **Figure 63**, then use the carriage handwheel to position the carriage and cutting tool at the desired stopping point.

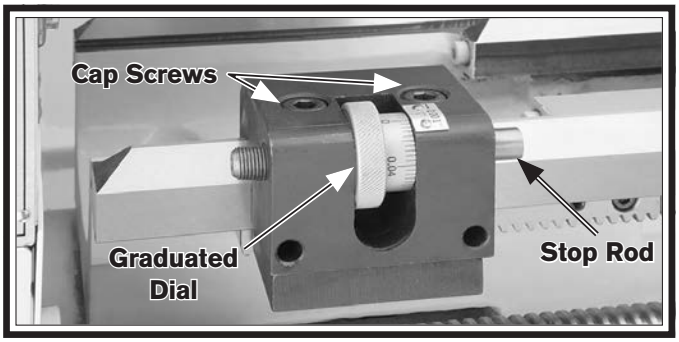

Figure 63. Micrometer stop.

3. Move the micrometer stop up to the carriage, use the graduated dial to fine tune the position, then retighten the cap screws loosened in **Step 2**.

4. Verify that tooling will not make contact with the chuck, jaws, or other components.

Manual Feed

The handwheels shown in **Figure 64** allow the operator to manually move the cutting tool.

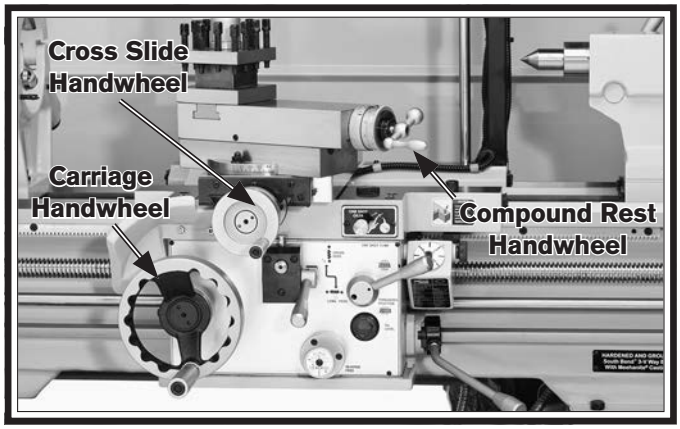

Figure 64. Carriage controls for manual feed.

Carriage Handwheel

The carriage handwheel moves the carriage left or right along the bed. It has a graduated dial with 0.01" increments, and one full revolution moves the carriage 0.80". Pull the handwheel out to disengage it during power feed operations—this will prevent entanglement hazards.

Cross Slide Handwheel

The cross slide handwheel moves the tool toward and away from the work. Adjust the position of the graduated scale by holding the handwheel with one hand and turning the dial with the other. The cross slide handwheel has a direct-read graduated dial, which shows the total amount of material removed from the diameter of the workpiece (i.e., half the amount of tool movement). The dial has 0.001" (0.02mm) increments, and one full revolution moves the slide 0.100" (5.08mm). Rotate the dial collar 180° to read in metric units.

Compound Rest Handwheel

The compound rest handwheel moves the cutting tool linearly along the set angle of the compound rest. The compound rest angle is set by hand-rotating it and securing in place with two hex nuts. The compound rest has an indirect-read graduated dial with 0.001" (0.02mm) increments. One full revolution of the handwheel moves the slide 0.100" (2.54mm). Rotate the dial collar 180° to read in metric units.

Spindle Speed

Using the correct spindle speed is important for safe and satisfactory results, as well as maximizing tool life.

To set the spindle speed for your operation, you will need to: 1) Determine the best spindle speed for the cutting task, and 2) configure the lathe controls to produce the required spindle speed.

Determining Spindle Speed

Many variables affect the optimum spindle speed to use for any given operation, but the two most important are the recommended cutting speed for the workpiece material and the diameter of the workpiece, as noted in the formula shown in **Figure 65**.

$$\frac{*\text{Recommended Cutting Speed (FPM)} \times 12}{\text{Dia. of Cut (in inches)} \times 3.14} = \text{SpindleSpeed (RPM)}$$

*Double if using carbide cutting tool

Figure 65. Spindle speed formula for lathes.

Cutting speed, typically defined in feet per minute (FPM), is the speed at which the edge of a tool moves across the material surface.

A recommended cutting speed is an ideal speed for cutting a type of material in order to produce the desired finish and optimize tool life.

The books **Machinery's Handbook** or **Machine Shop Practice**, and some internet sites, provide excellent recommendations for which cutting speeds to use when calculating the spindle speed. These sources also provide a wealth of additional information about the variables that affect cutting speed and they are a good educational resource.

Also, there are a large number of easy-to-use spindle speed calculators that can be found on the internet. These sources will help you take into account the applicable variables in order to determine the best spindle speed for the operation.

Setting Spindle Speed

1. Make sure the spindle is turned ***OFF*** and it has come to a complete stop.

2. Find the spindle speed range in the following options that is closest to your calculated spindle speed:

   — 20, 25, 35, and 50 RPM

   — 65, 85, 115, and 150 RPM

   — 210, 280, 380, and 500 RPM

   — 670, 900, 1200, and 1600 RPM

3. Move the spindle speed range lever (see **Figure 66**) so that the colors of the selected spindle speed range align with those of the stationary plate.

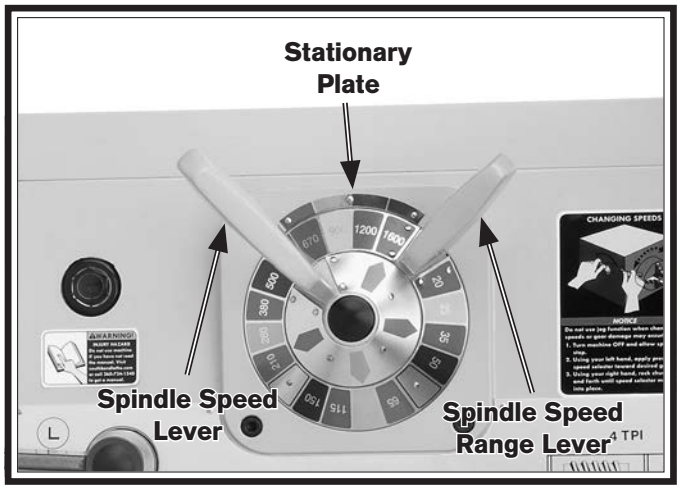

Figure 66. Spindle speed of 1600 RPM is selected.

4. Move the spindle speed lever to align the arrow on the inner hub with the same color as your selected speed on the outer hub.

NOTICE

Operating the lathe at spindle speeds higher than 350 RPM when the high (H) gearbox range is selected could result in gearbox damage. Always use spindle speeds of 350 RPM or lower when using the high (H) gearbox range.

Power Feed

Both the carriage and cross slide have power feed capability when the carriage is engaged with the feed rod. The rate that these components move (feed rate) is controlled by the headstock and quick-change gearbox lever positions, and the end gear configuration.

Feed rate and spindle speed must be considered together. Keep in mind that the feed rate is expressed in the amount of travel per revolution of the spindle. The sources you use to determine the optimum spindle speed for an operation will also provide the optimal feed rate to use with that spindle speed.

Often, the experienced machinist will use the feeds and speeds given in their reference charts or web calculators as a starting point, then make minor adjustments to the feed rate (and sometimes spindle speed) to achieve the best results.

The carriage can alternatively be driven by the leadscrew for threading operations. However, this section only covers the use of the power feed option for the carriage and cross slide components for non-threading operations. To learn how to power the carriage for threading operations, refer to **Threading** on **Page 59**.

Power Feed Controls

Use **Figures 67–71** and the following descriptions to become familiar with the locations and functions of the controls that you will use to set up the correct power feed for your operation.

Note: Before using power feed, you may have to re-configure the end gears, depending on how they are set up. Refer to **End Gears** on **Page 58** for detailed instructions.

Gearbox Range Lever: Selects the low or high feed rate range by re-aligning the headstock transfer gear. In the middle position, disables power feed (see **Figure 67**).

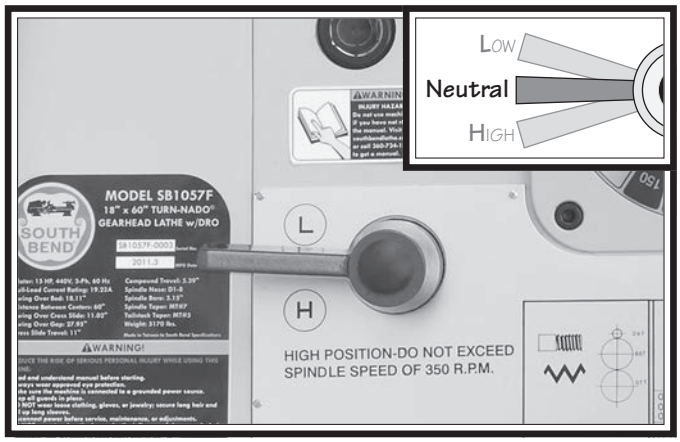

Figure 67. Gearbox range lever.

NOTICE

Operating the lathe at spindle speeds higher than 350 RPM could result in gearbox damage when the high (H) gearbox range is selected. Always use spindle speeds of 350 RPM or lower when using a high gearbox range.

Headstock Feed Direction Lever: Selects the direction of power feed (see **Figure 68**).

Note: The spindle must be stopped to use this lever. When the lathe is running, use the apron feed direction knob.

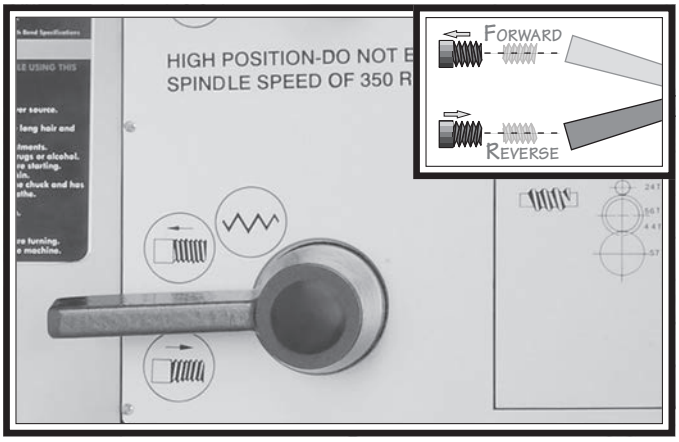

Figure 68. Headstock feed direction lever.

Quick-Change Gearbox Feed Levers: Configure the quick-change gearbox gears for the feed rate selected per the feed chart (see **Figure 69**).

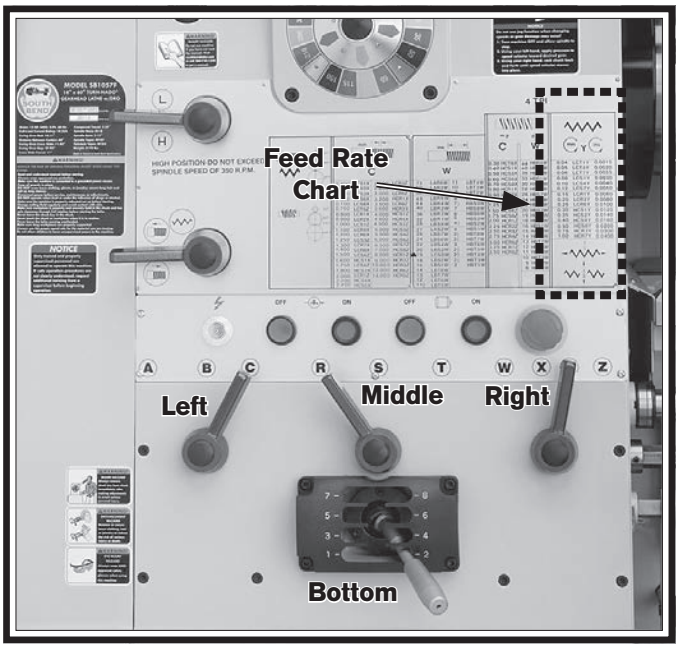

Figure 69. Quick-change gearbox controls.

Feed Selection Knob: Selects the carriage or cross slide for power feed (see **Figure 70**).

When the knob is pulled out, the cross slide is selected. Conversely, when the knob is pushed in, the carriage is selected.

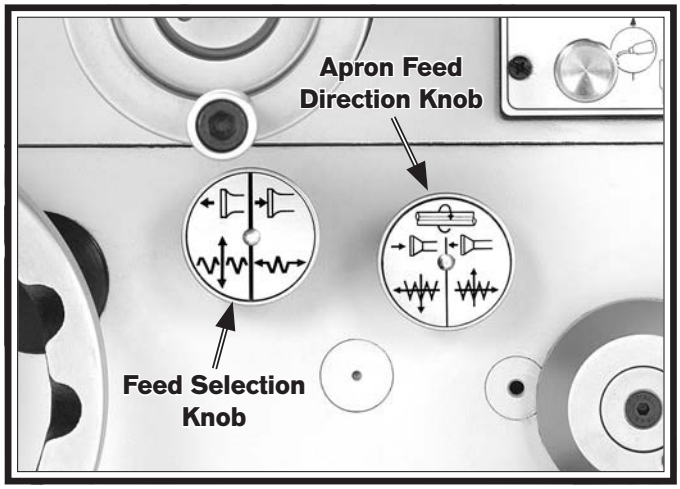

Figure 70. Apron feed selection and direction knobs.

In the middle position, the apron gears are disengaged from the feed rod and neither component will move.

Note: When using this control, you may need to rock the handwheel of the component being engaged so that the apron gears will mesh.

Apron Feed Direction Knob: Changes power feed direction (see **Figure 70**),

When pushed in or pulled out, this knob quickly reverses the power feed direction while the spindle is rotating—without having to turn the lathe off and use the feed direction lever on the headstock.

NOTICE

Depending on the combined configuration of the feed direction lever on the headstock and the feed direction knob on the apron, the actual direction of power feed may be different from the printed indicators on the machine!

Carriage Feed Clutch Knob: Adjusts how easily the carriage clutch will disengage automatic feeding when the carriage contacts a feed stop or in the event of a crash. Tightening this knob all the way disables the carriage clutch completely (see **Figure 71**).

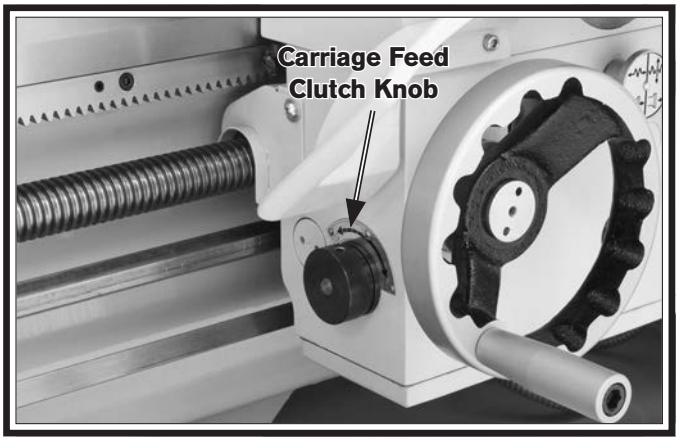

Figure 71. Adjustable carriage feed clutch knob.

The carriage clutch serves two purposes: 1) It disengages the carriage feed when the carriage contacts a feed stop, providing a precise repeatable stopping point; and 2) it provides a safety factor in the event of an accidental overload or crash.

The correct carriage clutch setting will depend on variables of the operation, such as workpiece material, depth of cut, power feed rate, and others. Finding this clutch setting is a matter of trial-and-error and experience.

For a starting point of clutch adjustment, rotate the carriage feed clutch knob clockwise until it is tight, then back it off counterclockwise three full revolutions. This is a reasonably conservative setting to start with. If necessary, further adjust the knob for the setting that is right for your operation.

NOTICE

The carriage clutch will not stop carriage movement when it is engaged with the leadscrew for threading.

If the carriage feed clutch knob is completely tight (all the way clockwise), it will be disabled, which will not allow it to help prevent damage in event of a crash.

Setting Power Feed Rate

The power feed rate chart displays the settings for the headstock feed controls for metric and inch feed rates (see **Figure 72**).

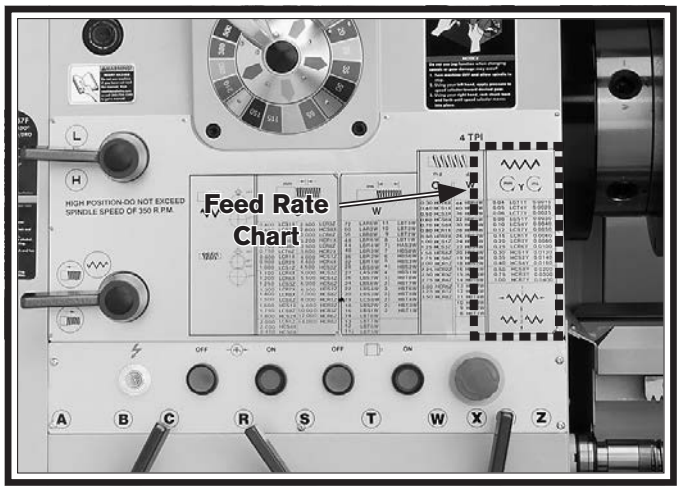

Figure 72. Power feed rate chart.

Using the controls on the lathe, follow along with the example below to better understand how to set the lathe for the desired power feed rate.

Example: Power Feed Rate of 0.0025"/rev

1. Make sure the end gears are in the standard configuration, which is applicable for general feeding operations (refer to **End Gears** on the **Page 58** for detailed instructions).

2. Locate the line in the feed rate chart that lists the setting for 0.0025" of feed per revolution of the spindle, as illustrated in **Figure 73**.

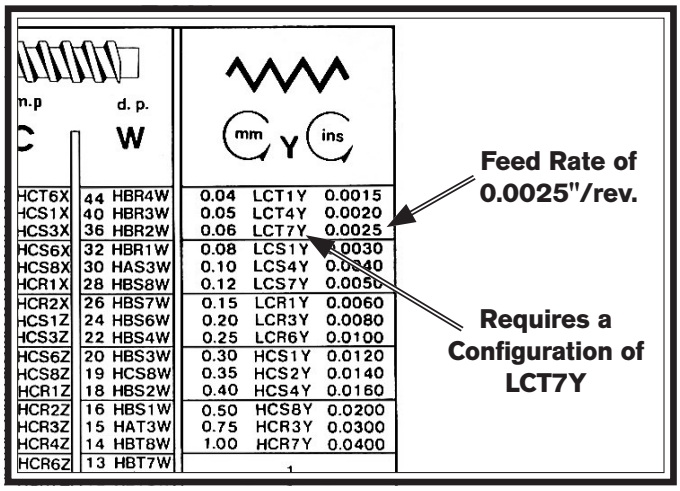

Figure 73. Feed rate chart.

Note: In the next step, use the chuck key to rock the spindle back and forth to help mesh the gears as you make adjustments.

3. For a power feed rate of 0.0025"/rev., use the configuration string of characters to the left of the selected feed rate (LCT7Y) to configure the controls as follows:

   L Move the gearbox range lever on the headstock up to the low position.

   C Point the left gearbox lever to "C".

   T Point the middle gearbox lever to "T".

   7 Position the bottom gearbox lever in slot "7".

   Y Point the right gearbox lever to "Y".

The lathe is now set up for a power feed rate of 0.0025" per spindle revolution.

NOTICE

When using power feed to move the cross slide, the feed rate is ½ the value stated in the feed rate chart.

End Gears

The end gears on the side of the headstock can be setup for the standard or alternate configuration, depending upon the type of operation to be performed. The lathe is shipped with the end gears in the standard configuration.

To access the end gears, remove the end gear cover from the left side of the headstock

Standard End Gear Configuration

Use the standard end gear configuration (see **Figure 74**) for inch threading, metric threading, and all general feed operations.

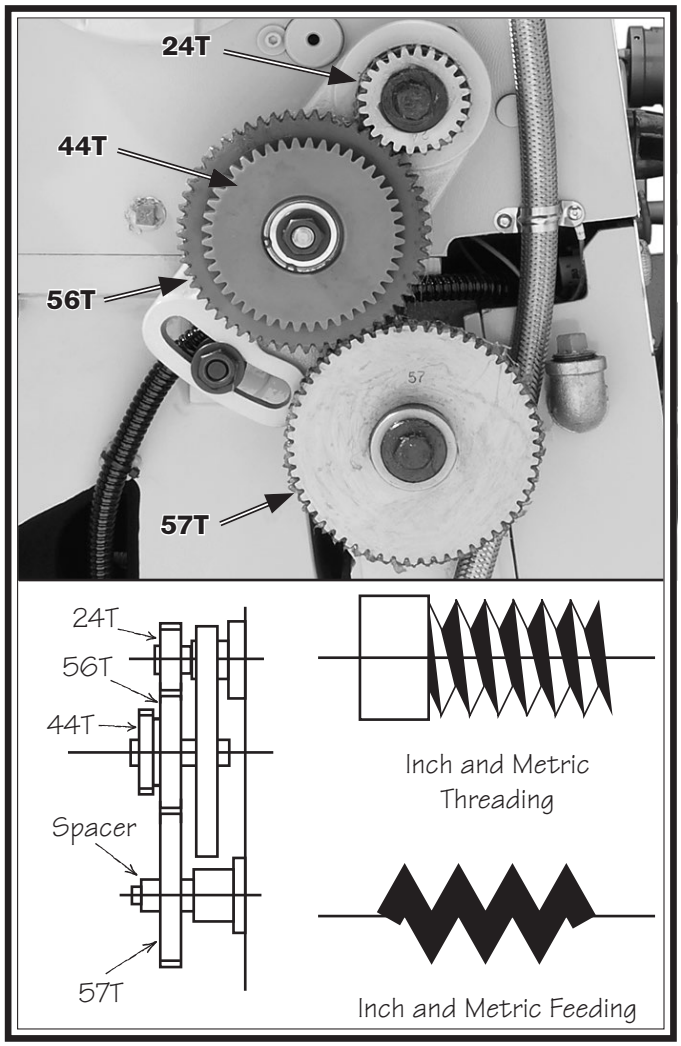

Figure 74. End gears in the standard configuration.

Alternate End Gear Configuration

Use the alternate end gear configuration when cutting modular or diametral pitches, as illustrated in **Figure 75**.

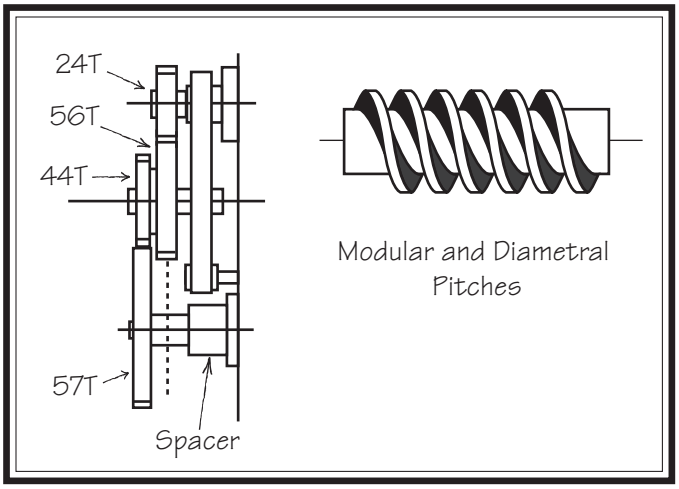

Figure 75. Alternate end gear configuration.

Configuring End Gears

Tools Needed	Qty
Hex Wrench 6mm	1
Wrench 22mm	1

To configure the end gears:

1. DISCONNECT LATHE FROM POWER!
2. Remove the end gear cover from the left side of the headstock.
3. Remove the cap screw, lock washer, and flat washer from the 57T end gear (see **Figure 76**).

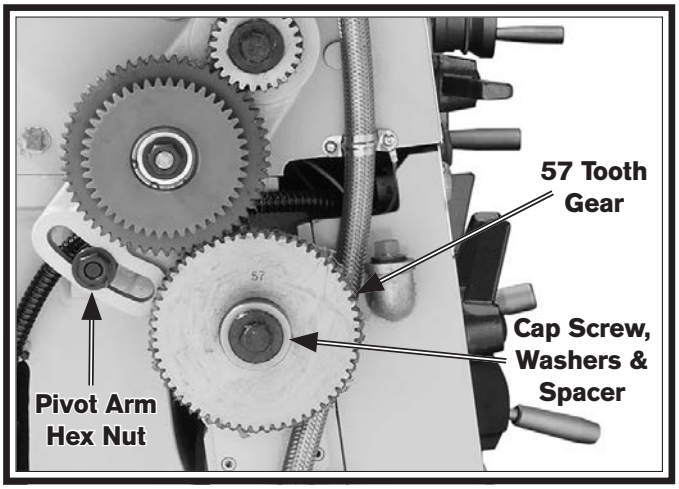

Figure 76. End gear components.

4. Loosen the pivot arm hex nut shown in **Figure 76**, then swing the pivot arm to the left so that the 44T/56T gears are away from the 57T gear. Hand tighten the hex nut to keep the arm in place.

> ***NOTICE***
>
> **As you remove and replace end gears, use a stiff brush and mineral spirits to clean away the debris and grime from them, then re-lubricate them as instructed in End Gears on Page 73.**

5. Making sure to keep the shaft key firmly seated, remove the spacer and the 57T gear, then re-install them as follows:

— For the standard end gear configuration, slide the 57T gear on first, then the spacer on the outside.

— For the alternate end gear configuration, slide the spacer on first, then the gear.

6. Re-install the cap screw, lock washer, and flat washer you removed in **Step 3** to secure the spacer and 57T gear. Do not overtighten.

7. Slide the pivot arm back so that either the 44T or the 56T meshes with the 57T gear, then retighten the pivot arm hex nut.

Note: Make sure to keep approximately 0.002" play between the gears.

8. Replace and secure the end gear cover before re-connecting the lathe to power.

Threading Controls

The following subsections describe how to use the threading controls and charts on this lathe. If you are unfamiliar with the process of cutting threads on a lathe, we strongly recommend that you read books, review industry trade magazines, or get formal training before doing any threading projects.

Headstock & Gearbox Threading Controls

The threading charts on the headstock face display the settings for metric and inch threading, and modular and diametral pitches.

For inch or metric threads, use the standard end gear configuration. For modular or diametral pitches, use the alternate configuration

Use the controls on the lathe and follow along with the example below to better understand how to set up the lathe for the desired threading operation.

Example: Metric Thread Pitch of 2.5mm

1. Make sure the end gears are in the standard configuration, which is used for all metric threading (refer to **End Gears** on **Page 58** for detailed instructions).

2. Locate the line in the metric thread chart that lists the setting for 2.5mm threads, as illustrated in **Figure 77**.

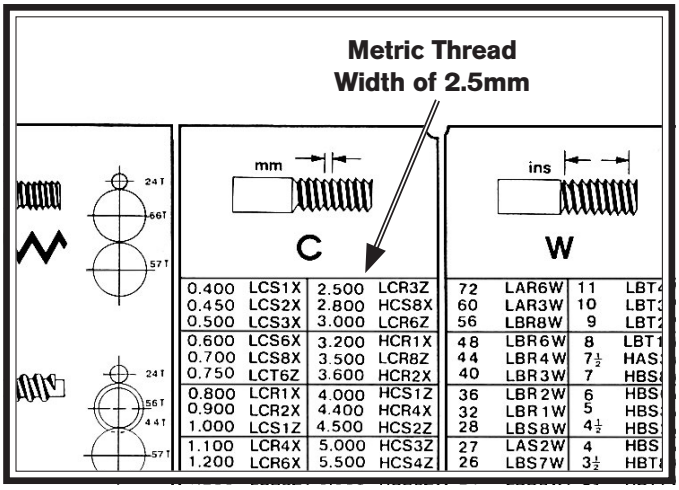

Figure 77. Metric thread chart.

Note: In the next step, use the chuck key to rock the spindle back and forth to help mesh the gears as you make adjustments.

3. For a metric thread pitch of 2.5mm, use the configuration string of characters to the right of the selected thread pitch (**LCR3Z**) to position the threading controls as follows:

L Move the gearbox range lever to the low position.

C Point the left gearbox lever to the **C**.

R Point the middle gearbox lever to the **R**.

3 Position the bottom gearbox lever in the **3** slot.

Z Point the right gearbox lever to **Z**.

The lathe is now setup to cut a 2.5mm thread pitch.

Apron Controls

The half nut lever engages the apron with the leadscrew which moves the carriage and cutting tool along the length of the workpiece for threading operations (see **Figures 78–79**).

Important: Make sure the feed control lever is in the disengaged (middle) position before attempting to engage the half nut.

NOTICE

Attempting to engage the half nut while the cross slide or carriage is engaged with the feed rod could cause severe damage to the lathe. Never attempt to engage the half nut while the feed control lever is engaged.

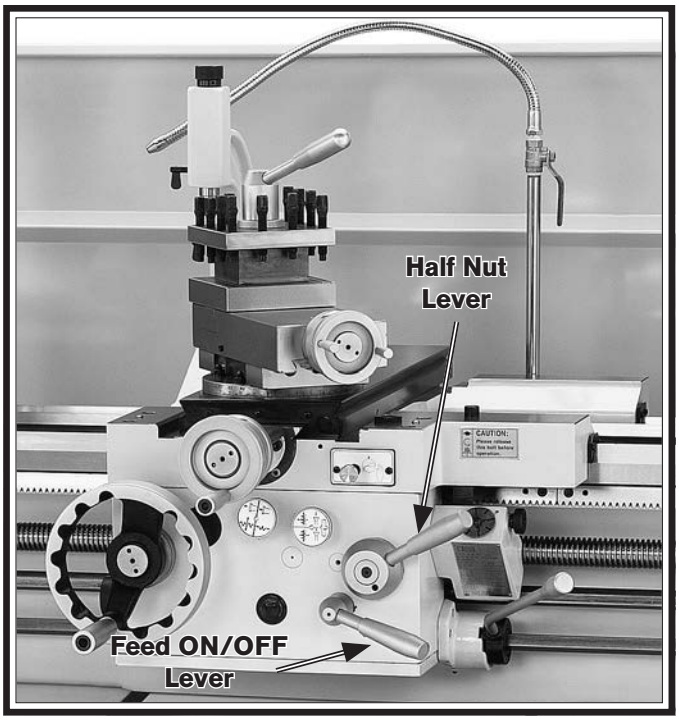

Figure 78. Carriage controls.

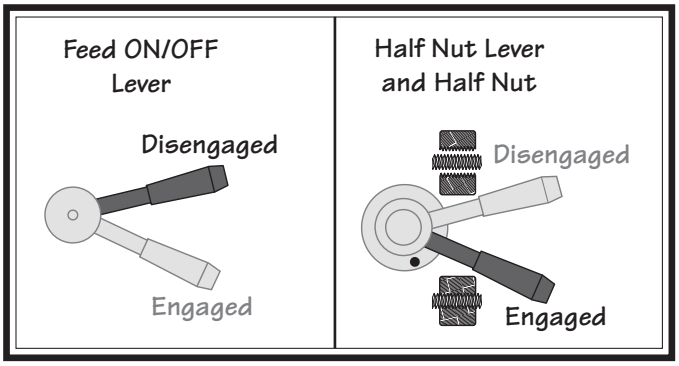

Figure 79. Feed ON/OFF lever and half nut positions for threading.

Thread Dial

The numbers on the thread dial are used with the thread dial chart to show when to engage the half nut during inch threading. The thread dial gear must be engaged with the leadscrew for this to work. Loosen the knurled knob on the thread dial, pivot the dial gear toward the leadscrew so that it properly meshes with the leadscrew threads, then re-tighten the knob, as shown **Figure 80**.

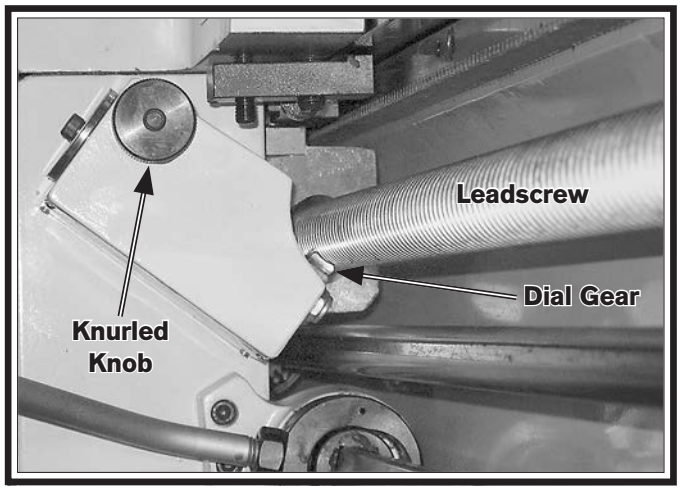

Figure 80. Thread dial engaged with the leadscrew.

NOTICE

When threading, we recommend using the slowest speed possible and avoiding deep cuts, so you can more easily disengage the half nut to prevent an apron crash!

Thread Dial Chart

Find the TPI (threads per inch) that you want to cut in the left column of the thread dial chart (see **Figure 81**), then reference the dial number to the right of it. The dial numbers indicate when to engage the half nut for a specific thread pitch. The thread dial chart can also be found on the front of the thread dial housing.

In.	
4,8,12,16,20,24, 28,32,36,40,44, 48,56,60,72	Any Position
2,6,10,14, 18,22,26, 30,54	Non-Numbered Position
3,5,7,9, 11,13,15, 19,23,27	Numbered Position 1,2,3,4
2½,3½,4½, 7½,11½,13½	Position 1,3 or 2,4
2¼,2¾, 3¼,3¾	Position 1 Only
2⅞	Same as Metric Threads

Figure 81. Thread dial chart.

Note: The thread dial is not used for metric threading, or diametral and modular pitches. With these, you must leave the half nut engaged until the turning is complete.

The following examples explain how to use the thread dial chart for inch threads.

TPI Divisible By 4

For threading a TPI that is divisible by four, use any line on the thread dial (see **Figure 82**).

TPI	
4,8,12,16,20,24, 28,32,36,40,44, 48,56,60,72	Any Position

Figure 82. Any position on the dial for threading TPI divisible by 4.

Even TPI Not Divisible By 4

For threading a TPI that is even but not divisible by 4, use any of the non-numbered lines on the thread dial (see **Figure 83**).

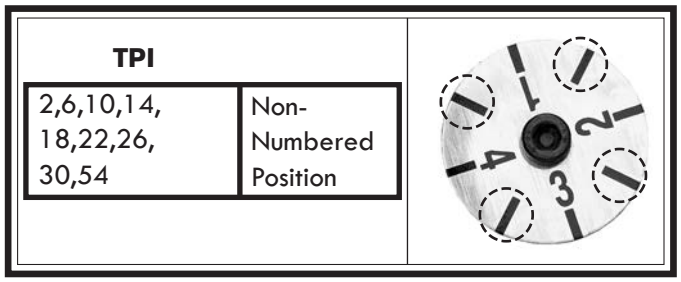

Figure 83. Marks are selected on the dial for threading even TPI not divisible by 4.

Odd Numbered TPI

For odd numbered TPI, use any of the numbered lines on the thread dial (see **Figure 84**).

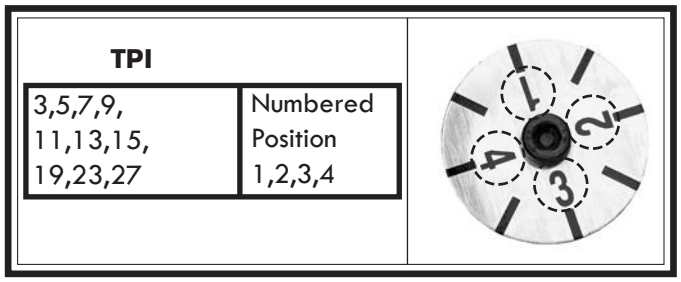

Figure 84. Numbers are selected on the dial for threading odd numbered TPI.

½ Fractional TPI

Use any opposing number pairs—2/4 or 1/3 on the thread dial for ½ fractional TPI (see **Figure 85**). For example, to cut a 3½ thread, select 1 or 3 on the dial.

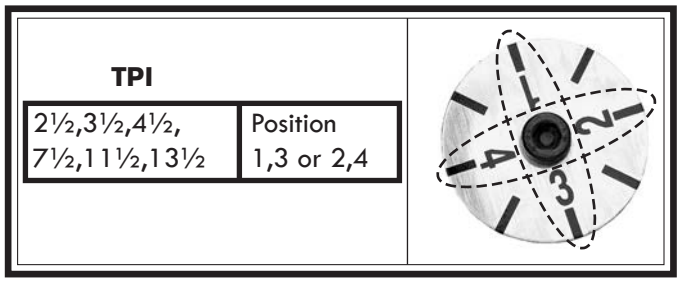

Figure 85. Opposing number group are selected on dial for cutting ½ thread TPI.

¼ or ¾ Fractional TPI

For TPI that have a ¼ or ¾ fraction, use position 1 on the thread dial (see **Figure 86**).

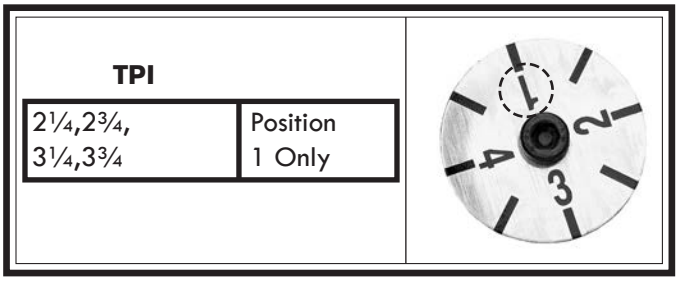

Figure 86. Position for ¼ or ¾ fractional TPI.

2⅞ TPI

The thread dial is not used for 2⅞ or metric threading, or diametral and modular pitches (see **Figure 87**). The half nut must stay engaged with the leadscrew throughout the entire threading operation.

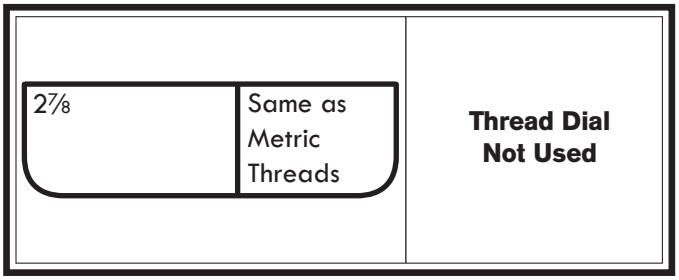

Figure 87. Half nut stays engaged for 2⅞ TPI.

Chip Drawer

The chip drawer catches swarf and metal chips during the machining process. It contains a screen that keeps the large chips from returning to the reservoir with the run-off coolant—this prevents the chips causing pump damage.

Also, it slides open and is removable for cleaning (see **Figure 88**).

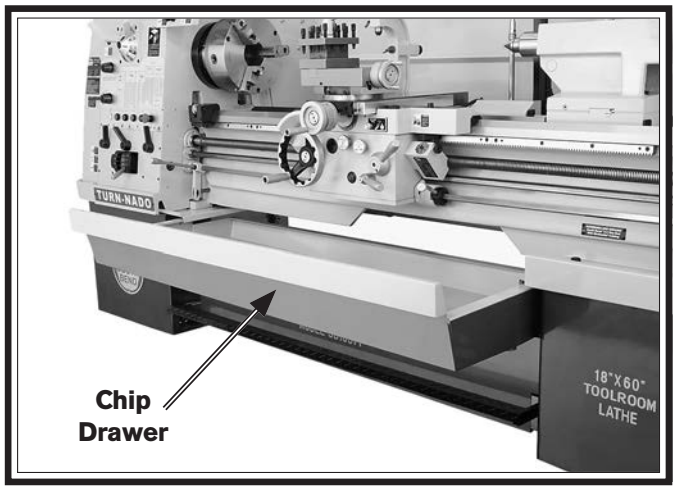

Figure 88. Chip drawer.

⚠CAUTION

The chip drawer is very heavy. Unless removing the chip drawer for cleaning, do not pull it out more than halfway to prevent it falling and causing impact injuries. If removing the drawer for cleaning, get assistance!

Coolant System

When the coolant pump is turned ***ON***, the fluid is delivered through the nozzle attached to the carriage. The flow is controlled by the valve lever at the base of the nozzle (see **Figure 89**).

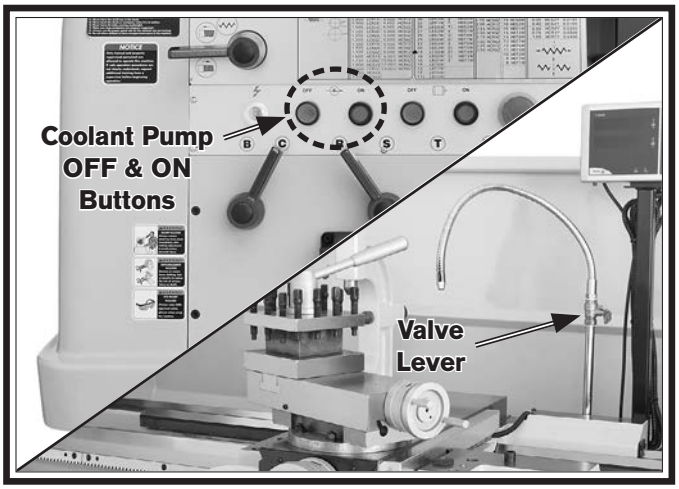

Figure 89. Coolant flow controls.

Always use high quality coolant and follow the manufacturer's instructions for diluting and maintenance. The quick reference table shown in **Figure 90** can help you select the appropriate fluid.

Refer to **Coolant System Service** on **Page 74** for detailed instructions on how to add or change fluid. Check the coolant regularly and promptly change it when it becomes overly dirty or rancid, or as recommended by the fluid manufacturer.

Workpiece	Dry	Water Soluble Oil	Synthetic Coolants	Sulferized Oil	Mineral Oil
Aluminum		X	X		
Brass	X	X	X		
Bronze	X	X	X		X
Cast iron	X				
Low Carbon Steel		X	X		
Alloy Metals		X	X	X	X
Stainless Steel		X	X	X	X

General Note: Coolants are used for heavy-duty lathe operations and production turning. Oil-water emulsions and synthetic cutting fluids are the most common for typical lathe operations. Sulferized oils often are used for threading. For small projects, spot lubrications can be done with an oil can or brush, or omitted completely.

Figure 90. Coolant selection table.

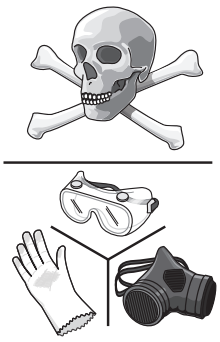

⚠WARNING

BIOLOGICAL & POISON HAZARD!

Use the correct personal protection equipment when handling coolant. Follow federal, state, and fluid manufacturer requirements for proper disposal.

NOTICE

Running the pump without adequate fluid in the coolant tank may permanently damage it, which will not be covered under warranty.

To use the coolant system on your lathe:

1. Make sure the coolant tank is properly serviced and filled with the appropriate fluid, and that you are wearing the necessary personal protection equipment.

2. Position the coolant nozzle for your operation.

3. Use the coolant pump switch on the control panel to turn the pump ***ON***.

4. Adjust the flow of coolant by using the valve lever near the base of the nozzle hose.

Important: Promptly clean any splashed fluid from the floor to avoid a slipping hazard.

Rod Support

Models SB1047F, SB1048PF, and SB1058F include a rod support that gives additional reinforcement to the leadscrew and feed rod (see **Figure 91**).

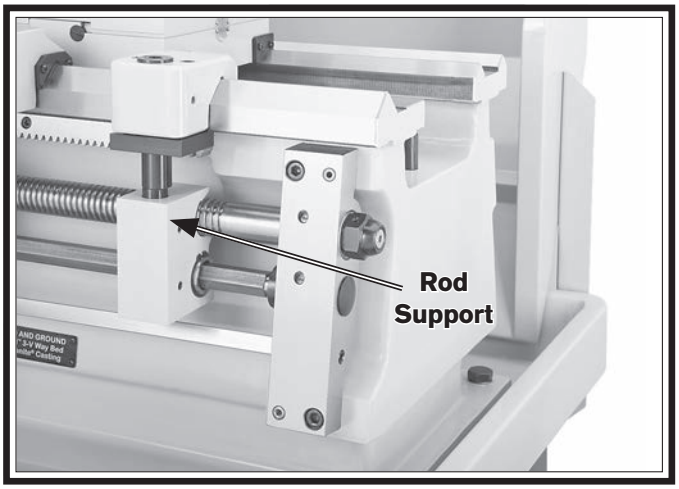

Figure 91. Rod support.

Ideally, the best position along the bed for the rod support is mid-way between the right end of the leadscrew and the farthest place toward the tailstock that the carriage will travel during the operation.

Use a 6mm hex wrench to loosen the cap screws that secure the clamp plate, position the rod support where desired, then re-tighten the cap screws.

NOTICE

To avoid lathe damage, make sure the carriage will not crash into the rod support when using longitudinal power feed.

Accessories

This section includes the most common accessories available for your lathe, which may be available through your local South Bend Lathe Co. dealer. If you do not have a dealer in your area, please call us at (360) 734-1540 or email us at **cs@southbendlathe.com**.

SB1279—10 Pc. Precision 5—C Collet Set

Set of 10 collets sized from ⅛" - ¾". Same quality as the individual collets, only packaged in one convenient set.

Figure 92. Model SB1279 10 Pc. 5-C Collet Set.

SB1272—Collect Attachment

This collet attachment takes advantage of the South Bend factory-made collet port in the lathe gear cover. This accessory installs easily on these South Bend Lathes without having to modify the gear cover. The Model SB1272 is capable of delivering years of trouble-free service. It is manufactured with the same high-quality workmanship, materials, and tolerances South Bend machinery is known for.

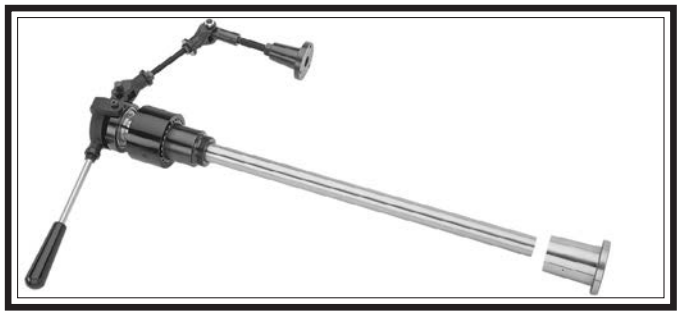

Figure 93. Model SB1272 Collect Attachment

SB1298—SBL Bench Lathe Shop Clock
SB1299—SBL Toolroom Lathe Shop Clock
SB1300—SBL Lathe with Man

These fine traditional shop clocks are constructed with a metal antique-finished frame. They are easy to read from a distance and measure 14" in diameter. Pictures just don't do them justice. They are very nice quality clocks and perfect for the South Bend Lathe aficionado.

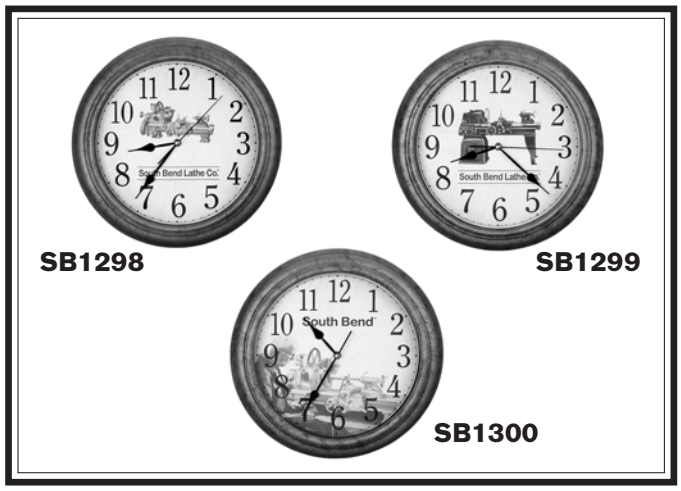

Figure 94. Antique-finished South Bend shop clocks.

SB1271—Taper Attachment

This taper attachment mounts quickly to the back bedway of your lathe. Accurate tapers of up to 12" can be produced without repositioning the attachment, having to offset the tailstock, or disengaging the cross slide nut. The Model SB1271 features scales at both ends, reading inches-per-foot and degrees. An angle adjusting knob with fine threads achieves exacting control when setting tapers.

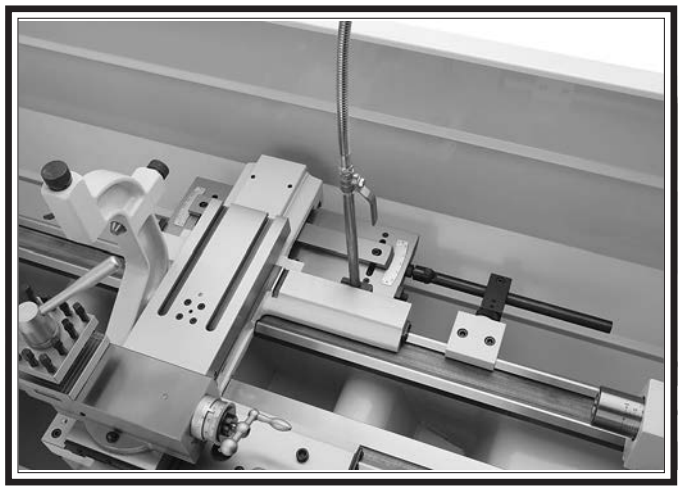

Figure 95. Model SB1271 Taper Attachment.

Maintenance Schedule

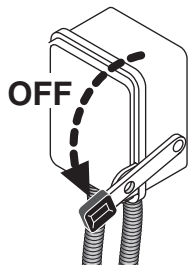

⚠WARNING
Always disconnect power to the machine before performing maintenance. Failure to do this may result in electrocution or accidental startup injury.

For optimum performance from this machine, this maintenance schedule must be strictly followed. We strongly recommend all operators make a habit of following the daily maintenance procedures. Use the chart provided on **Page 67** to ensure this is done.

Ongoing

The condition of machine components should be carefully observed at all times to minimize the risk of injury or machine damage. If any of the conditions below are observed, stop the lathe immediately, disconnect power, and correct the condition before resuming operations:

- Loose mounting bolts or fasteners.
- Worn, frayed, cracked, or damaged wires.
- Guards removed.
- STOP button not working correctly or not requiring you to reset it before starting the machine again.
- A reduction in braking speed or efficiency.
- Oil level not visible in the sight glasses.
- Coolant not flowing out.
- Damaged or malfunctioning components.

Daily, Before Operations

- Check/add headstock oil (**Page 68**).
- Check/add gearbox oil (**Page 69**).
- Check/add apron oil (**Page 70**).
- Check/add coolant (**Page 74**).
- Lubricate the ways (**Page 71**).
- Add oil to the ball oilers (**Page 72**).
- Clean/lubricate the leadscrew (**Page 72**).
- Disengage the feed control lever on the apron (to prevent crashes upon startup).
- Ensure carriage lock bolt is loose.

Daily, After Operations

- Depress STOP button and shut ***OFF*** the master power switch (to prevent accidental startup).
- Vacuum/clean all chips and swarf from bed, slides, and chip drawer.
- Wipe down all unpainted or machined surfaces with an oiled rag.

Monthly

- Drain and clean the coolant tank, then add new fluid (**Page 74**).

Annually

- Change the headstock oil (**Page 68**).
- Change the apron oil (**Page 70**).
- Change the gearbox oil (**Page 69**).
- Lubricate end gears (**Page 73**).
- Check/level bedway (**Page 28**).

Cleaning & Protecting

Regular cleaning is one of the most important steps in taking care of this lathe. We recommend that the cleaning routine be planned into the workflow schedule, so that adequate time is set aside to do the job right.

Typically, the easiest way to clean swarf from the bed ways and chip drawer is to use a wet/dry shop vacuum that is dedicated for this purpose. The small chips left over after vacuuming can be wiped up with a slightly oiled rag. Avoid using compressed air to blow off chips, as it may drive them deeper into moving surfaces and could cause sharp chips to fly into your face or hands.

Besides the ways, all other unpainted and machined surfaces should be wiped down daily to keep them rust-free and in top condition. This includes any surface that is vulnerable to rust if left unprotected (especially any parts that are exposed to water-soluble coolant). Typically, a thin film of oil is all that is necessary for protection.

South Bend Lathe Co.® Lathe Monthly Maintenance Chart

Item \ Day	1	2	3	4	5	6	7	8	9	10	11	12	13	14	15	16	17	18	19	20	21	22	23	24	25	26	27	28	29	30	31
Lubrication																															
Ways																															
Ball Oilers																															
Leadscrew																															
Unpainted Surfaces																															
Inspection																															
Headstock Oil Level																															
Gearbox Oil Level																															
Apron Oil Level																															
Coolant Level																															
Coolant Condition		**Refer to the coolant manufacture's instructions for more information regarding coolant condition, replacement, disposal, and safety.**																													

Use this chart to keep track of the maintenance performed on your South Bend Lathe. Cross out or initial the "Day" box for each item on the list. If the box is blacked out, maintenance is not required for that item on that day. Use the maintenance poster included with your South Bend Lathe as a quick reference guide when performing the maintenance items.

Annual Service

Once every year, or more often with heavy use, perform these service items. Keep track of when you last performed your annual service and when you'll need to perform it again.

Date of last annual service:	
Date of next annual service:	

Service Item	☑
Change Gearbox Oil	
Change Headstock Oil	
Change Apron Oil	
Change Coolant	

Make copies of this page to use each month. Keep each chart as a maintenance record for your South Bend Lathe.

SOUTH BEND®

(360) 734-1540 • FAX: (360) 676-1075
www.southbendlathe.com

Lubrication

Headstock

The headstock is supplied with oil from the oil tank in the base of the left stand.

When the spindle motor is started, a belt-driven oil pump circulates oil across the headstock gears before spindle rotation is started.

Checking & Adding Oil

Oil Type...Mobil DTE Light or ISO 32 Equivalent
Oil Amount ..... 15.9 Quarts
Check/Add Frequency ..... Daily
Change Frequency .....Annually

Remove the end gear cover and the side access panel from the left stand, then unthread the oil fill cap to check the oil level on the dip stick (see **Figure 29**).

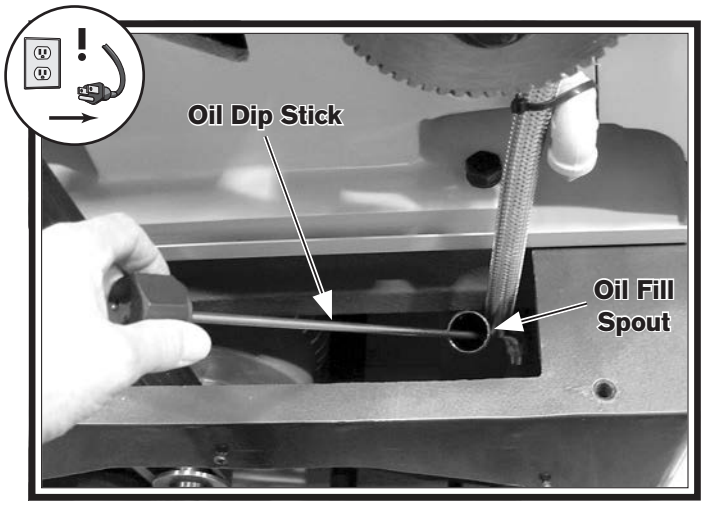

Figure 96. Checking headstock oil tank level.

If the oil on the dip stick is less than 3" from the tip of the stick, add oil.

Changing Headstock Oil

The headstock oil must be changed after the break-in period and then annually (or every six months with heavy service or extreme working conditions).

Since this lathe uses a base-mounted oil tank, removing the drain plug and using a drain pan is not a convenient option when changing the oil. Alternately, we recommend using a remote oil pump with a suction hose that can be inserted through the filler spout to the bottom of the oil tank.

If a remote oil pump system is not available, use the headstock oil pump for this purpose, as instructed below.

Items Needed:	**Qty**
5-Gallon Waste Oil Bucket with Lid	1
Adjustable Wrench	1
Hex Wrench 4mm	1
Mineral Spirits	As Needed
Shop Rags	As Needed
Low-Profile Catch Pan	1
Pipe Tape or Sealant	As Needed

To drain the headstock oil tank:

1. DISCONNECT LATHE FROM POWER!

2. Remove the end gear cover and the side access panel from the left stand.

3. Disconnect the headstock oil supply hose see (**Figure 97**) from the headstock and point it into the waste bucket.

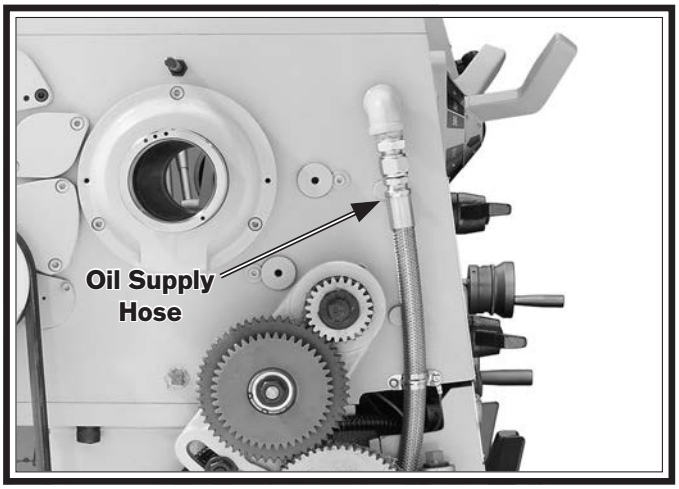

Figure 97. Headstock oil supply hose.

4. Staying well away from the V-belts, re-connect the lathe to power and press the spindle motor ON button—DO NOT start spindle rotation!

   This will pump oil from the tank into the bucket.

5. When oil stops flowing out of the supply hose, immediately press the spindle motor OFF button and disconnect the lathe from power.

6. Place the low-profile catch pan under the drain plug shown in **Figure 98**, then remove the drain plug and let the remaining oil flow from the tank.

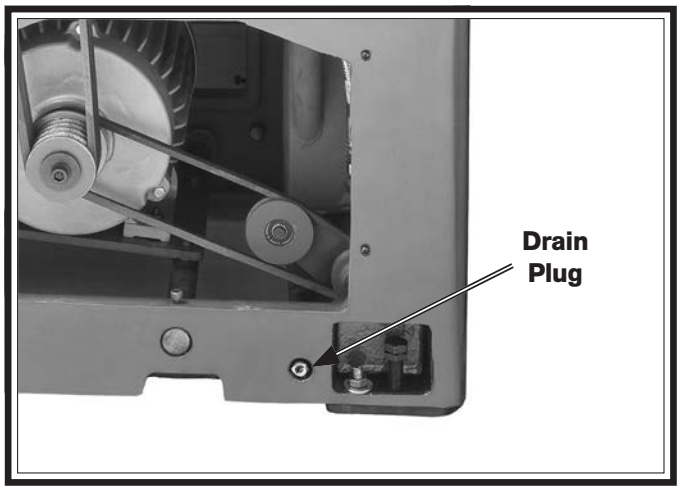

Figure 98. Headstock oil drain plug.

7. Re-install the drain plug and re-connect the oil supply hose to the headstock connection.

Note: Use pipe tape or sealant to ensure the connections do not leak.

8. Clean away any spilled oil with shop rags and mineral spirits.

9. Dispose or recycle the old oil according to federal, state, and local requirements.

10. Add oil as previously instructed, then re-install the end gear cover and side access panel before re-connecting the lathe to power.

Quick-Change Gearbox

Oil Type ..... Mobil Vactra 2 or ISO 68 Equivalent
Oil Amount ..... 3.2 Quarts
Check/Add Frequency ..... Daily
Change Frequency ..... Annually

Checking Oil Level

The quick-change gearbox has the proper amount of oil when the sight glass shown in **Figure 99** is halfway full.

Figure 99. Location of quick-change gearbox oil sight glass.

Adding Oil

Remove the quick-change gearbox fill plug (see **Figure 100**), then add oil until the level is approximately halfway in the gearbox oil sight glass.

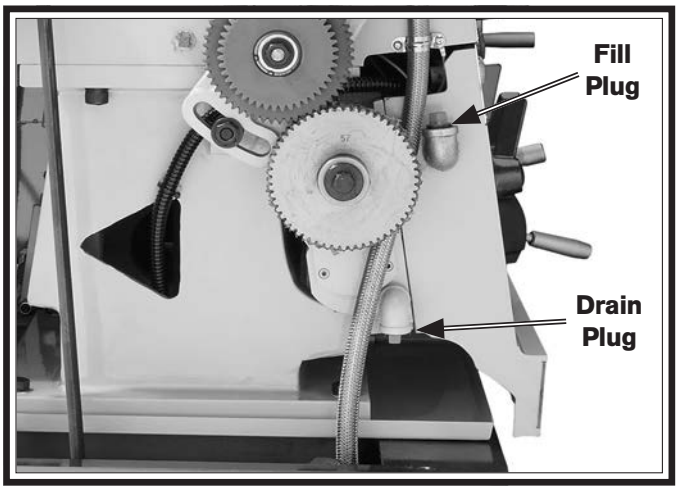

Figure 100. Locations of the quick-change gearbox fill and drain plugs.

Draining Oil

Place a catch pan under the quick-change gearbox drain plug (see **Figure 100**), loosen the fill plug and remove the drain plug, then allow the gearbox reservoir to empty.

Apron

Oil Type ..... Mobil Vactra 2 or ISO 68 Equivalent
Oil Amount ..... 2.1 Quarts
Check/Add Frequency ..... Daily
Change Frequency ..... Annually

Checking Oil Level

The apron has the proper amount of oil when the sight glass shown in **Figure 101** is halfway full.

Important: Keep in mind that the apron one-shot oiler draws the oil from the apron reservoir. Check this oil level often when using the one-shot oiler.

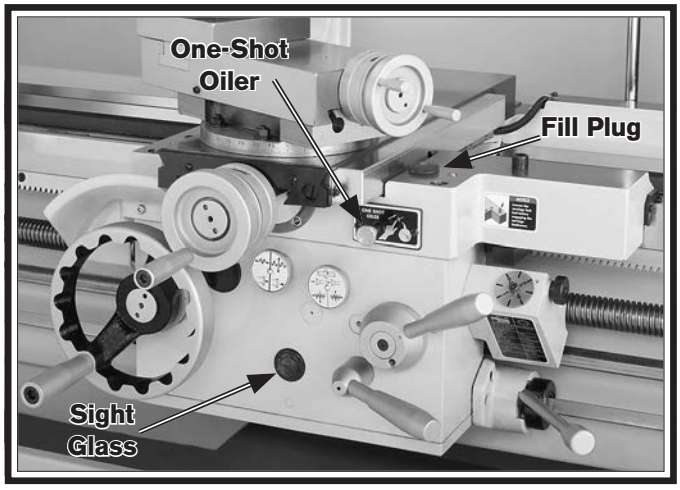

Figure 101. Location of apron oil sight glass.

Adding Oil

Remove the twist-off fill plug shown in **Figure 101**, and add oil until the sight glass is halfway full.

Draining Oil & Flushing Reservoir

Since the apron oil reservoir supplies the one-shot oiler, the oil is constantly being refreshed when the reservoir is filled. However, small metal particles may accumulate at the bottom of the reservoir with normal use. Therefore, to keep the reservoir clean, drain and flush it at least once a year.

Place a catch pan under the apron drain plug shown in **Figure 102**, loosen the fill plug, then use a 6mm hex wrench to remove the drain plug and empty the reservoir.

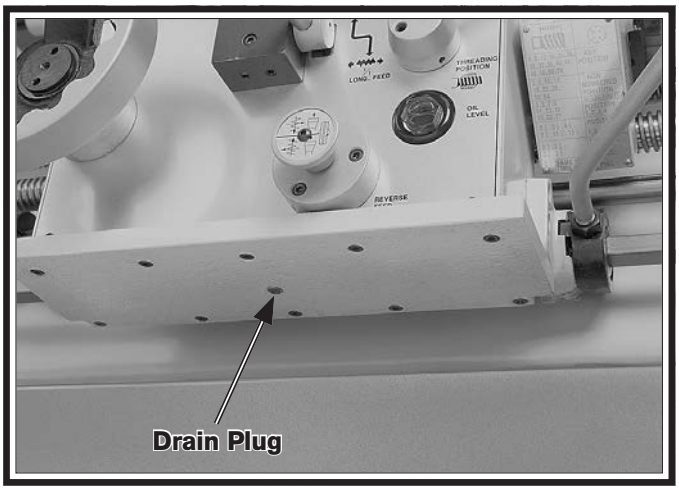

Figure 102. Location of apron drain plug.

Flush the reservoir by pouring a small amount of clean oil into the fill hole and allowing it to drain out the bottom.

Replace the drain plug and add oil as previously described.

One-Shot Oiler

The one-shot oiler shown in **Figure 103** lubricates the saddle ways with oil from the apron reservoir.

To use the one-shot oiler, pull the pump knob out for two or three seconds and then push it in. The pump draws oil from the apron reservoir and then forces it through drilled passages to the way guides.

Repeat this process while moving the carriage and cross slide through their full range of movement to distribute oil along the ways.

Lubricate the guides before and after operating the lathe. If the lathe is in a moist or dirty environment, increase the lubrication interval.

Check the apron oil level through the sight glass before using the one-shot oiler to ensure the proper oil level.

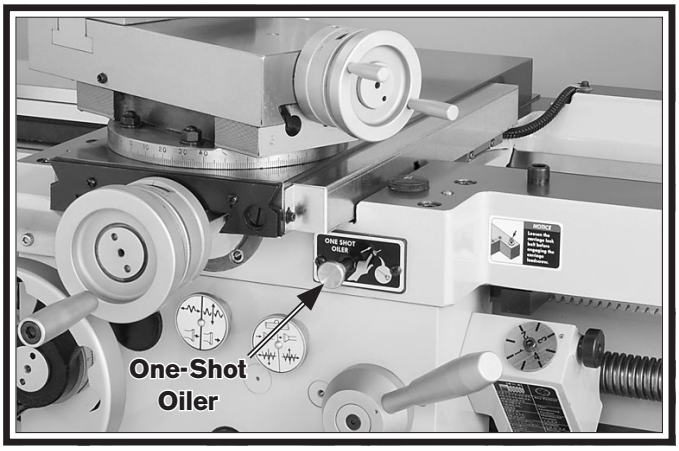

Figure 103. Location of one-shot oiler on the apron.

Longitudinal Leadscrew

Oil Type ..... Mobil Vactra 2 or ISO 68 Equivalent
Oil Amount ..... As Needed
Lubrication Frequency..... Daily

Before lubricating the leadscrew, clean it first with mineral spirits. A stiff brush works well to help clean out the threads. Make sure to move the carriage out of the way, so you can clean the entire length of the leadscrew.

Apply a thin coat of oil along the length of the leadscrew. Use a stiff brush to make sure the oil is applied evenly and down into the threads.

Note: In some environments, abrasive material can become caught in the leadscrew lubricant and drawn into the half nut. In this case, lubricate the leadscrew with a quality dry lubricant.

Ball Oilers

Oil Type ..... Mobil Vactra 2 or ISO 68 Equivalent
Oil Amount ..... As required
Pump Oil Can w/Plastic or Rubber Cone Tip 1
Lubrication Frequency..... Before and After Use

Proper lubrication of ball oilers is done with a pump-type oil can that has a plastic or rubberized cone tip. We do not recommend using metal needle or lance tips, as they can push the ball too far into the oiler, break the spring seat, and lodge the ball in the oil galley.

Lubricate the ball oilers before and after machine use, and more frequently under heavy use. When lubricating ball oilers, first clean the outside surface to remove any dust or grime. Push the rubber or plastic tip of the oil can nozzle against the ball oiler to create a hydraulic seal, then pump the oil can once or twice. If you see sludge and contaminants coming out of the lubrication area, keep pumping the oil can until the oil runs clear. When finished, wipe away any excess oil.

Refer to **Figures 104–106** to identify the locations of each oil device.

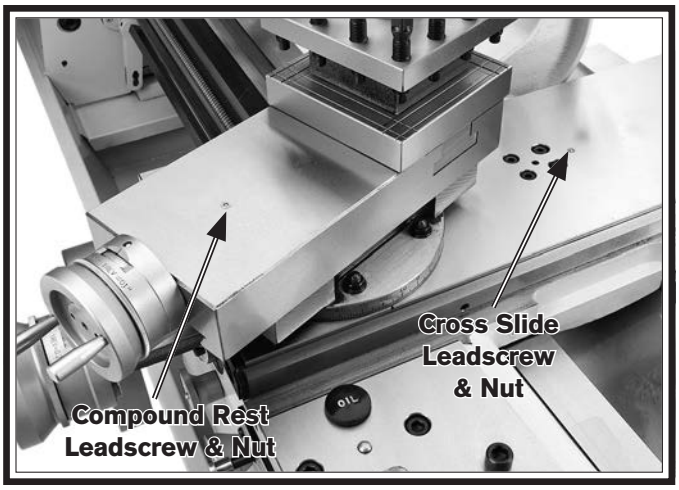

Figure 104. Carriage ball oilers.

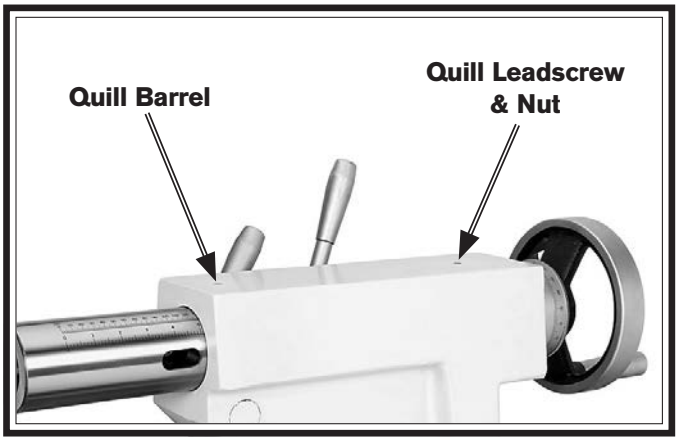

Figure 105. Tailstock ball oilers.

Figure 106. Leadscrew end bearing.

End Gears

Grease Type..... NLGI#2
Frequency ..... Annually or When Changing

The end gears, shown in **Figure 107**, should always have a thin coat of heavy grease to minimize corrosion, noise, and wear. Wipe away excess grease that could be thrown onto the V-belts and reduce optimal power transmission from the motor.

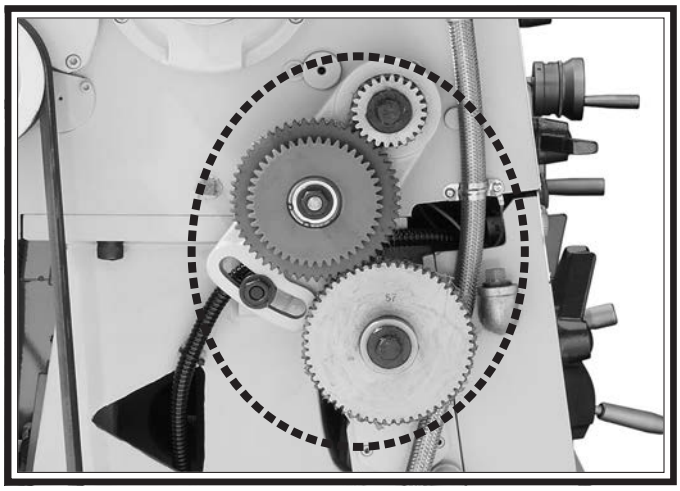

Figure 107. End gears.

Handling & Care

Make sure to clean and lubricate any gears you install or change. Be very careful during handling and storage—the grease coating on the gears will easily pickup dirt or debris, which can then spread to the other gears and increase the rate of wear.

Make sure the end gear cover remains installed whenever possible to keep the gears free of dust or debris from the outside environment.

Lubricating

1. DISCONNECT LATHE FROM POWER!
2. Remove the end gear cover and all the end gears shown in **Figure 107**.
3. Clean the end gears thoroughly with mineral spirits to remove the old grease. Use a small brush if necessary to clean between the teeth.
4. Clean the shafts, and wipe away any grease splatters in the vicinity and on the inside of the end gear cover.
5. Using a clean brush, apply a thin layer of grease on the gears. Make sure to get grease between the gear teeth, but do not fill the teeth valleys.
6. Install the end gears and mesh them together with an approximate 0.002" backlash. Once the gears are meshed together, apply a small dab of grease between them where they mesh together—this grease will be distributed when the gears rotate and re-coat any areas scraped off during installation.
7. Re-install the end gear cover before re-connecting the lathe to power.

Coolant System Service

The coolant system consists of a fluid tank, pump, and flexible nozzle. The pump pulls fluid from the tank and sends it to the valve, which controls the flow of coolant to the nozzle. As the fluid leaves the work area, it drains back into the tank through the chip drawer and catch tray where the swarf is screened out.

Use **Figures 108–109** to identify the locations of the coolant system controls and components.

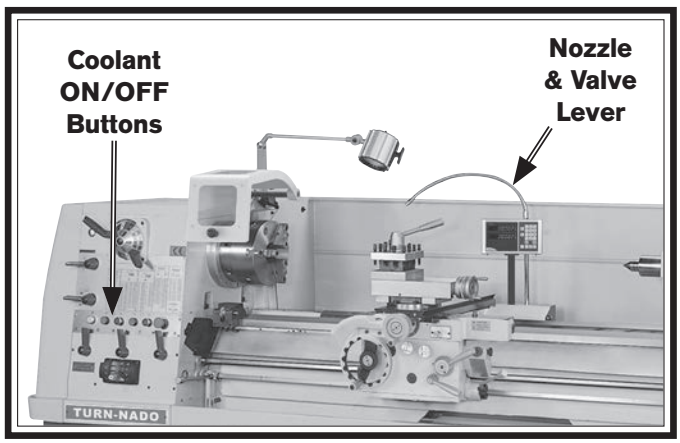

Figure 108. Coolant controls.

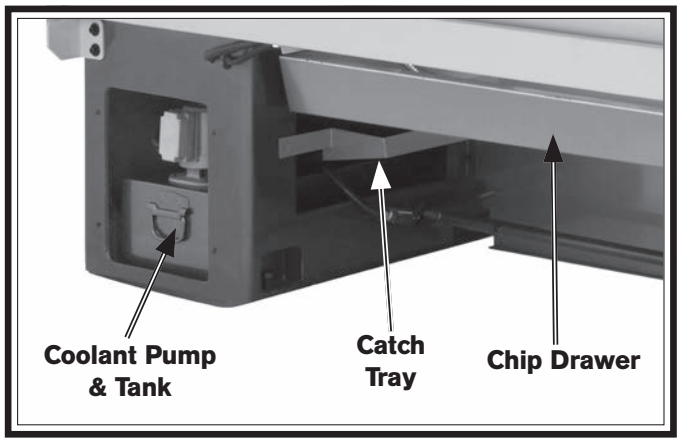

Figure 109. Additional coolant components.

Although most swarf from machining operations is screened out of the coolant before it returns to the tank, small particles will accumulate in the bottom of the tank in the form of sludge. To prevent this sludge from being pulled into the pump and damaging it, the pump's suction tube is positioned a couple inches from the bottom of the tank and fitted with a fine screen. This works well when the tank is regularly cleaned; however, if too much sludge is allowed to accumulate before the tank is cleaned, the pump will inevitably begin sucking it up.

Hazards

As coolants ages and gets used, dangerous microbes can proliferate and create a biological hazard. The risk of exposure to this hazard can be greatly reduced by replacing the old fluid on a monthly basis, or as indicated by the fluid manufacturer.

The important thing to keep in mind when working with the coolant is to minimize exposure to your skin, eyes, and lungs by wearing the proper PPE (Personal Protective Equipment), such as splash-resistant safety goggles, long-sleeve waterproof gloves, protective clothing, and a NIOSH approved respirator.

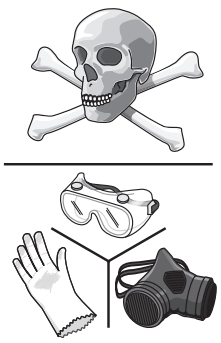

⚠WARNING

BIOLOGICAL & POISON HAZARD!

Use the correct personal protection equipment when handling coolant. Follow federal, state, and fluid manufacturer requirements for proper disposal.

Adding Fluid

1. DISCONNECT LATHE FROM POWER!

2. Remove the vented access cover from the rear of the right stand, then slide the tank out, as shown in **Figure 110**.

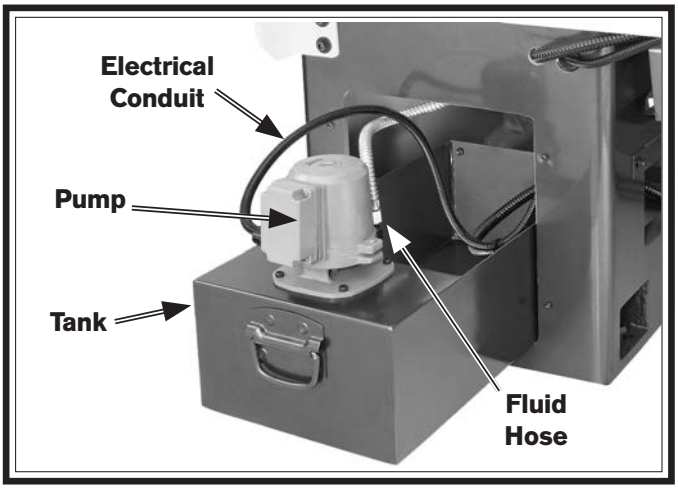

Figure 110. Coolant tank and pump.

3. Pour coolant into the tank until it is nearly full.

4. Slide the tank back into the cabinet and replace the access cover.

Changing Coolant

When you replace the old coolant, take the time to thoroughly clean out the chip drawer, catch tray, and fluid tank. The entire job only takes about a ½ hour when you are prepared with the proper materials and tools. Make sure to dispose of old fluid according to federal, state, and fluid manufacturer's requirements.

Items Needed:	**Qty**
Safety Wear	See **Hazards** on **Page 74**
New Coolant	25.4 Quarts
Empty 5-Gallon Bucket w/Lid	2
Phillips Screwdriver #2	1
Wrench ¾"	1
Disposable Shop Rags	As Needed
Hose or Tubing ⅝" x 60" (Optional)	1 Piece
Magnets (Optional)	As Many As Desired

To change the coolant:

1. Position the coolant nozzle over the back of the backsplash so that it is pointing behind the lathe.

2. Place the 5-gallon bucket behind the lathe and under the coolant nozzle. If you are using the optional hose, connect it to the nozzle and place it in the bucket. Otherwise, you may need to have another person hold the bucket up to the nozzle to prevent coolant from splashing out.

3. Turn the coolant pump ***ON*** and pump the old fluid out of the reservoir. Turn the pump ***OFF*** immediately after the fluid stops flowing.

NOTICE

Running the coolant pump without adequate fluid in the tank may permanently damage it, which will not be covered under warranty.

4. DISCONNECT LATHE FROM POWER!

5. Remove the vented access cover from the rear of the right stand, then slide the tank out.

6. To enable the remaining fluid to be poured out in the next step, disconnect the fluid hose from the pump (see **Figure 110**).

Note: The electrical conduit was purposely left long, so the tank can be removed and dumped out without disconnecting the wires from the pump.

7. Pour the remaining coolant into the 5-gallon bucket and close the lid.

8. Clean all the sludge out of the bottom of the tank and then flush it clean. Use the second bucket to hold the waste and make sure to seal the lid closed when done.

   Dispose of the old coolant and swarf according to federal, state, and fluid manufacturer's requirements.

9. Slide the tank partially into the base and re-connect the fluid hose.

Tip: Leave one or more magnets at the bottom of the tank to collect metal chips and make cleanup easier next time. This will also help keep small metal chips out of the pump.

10. Refill the tank with new coolant, then slide it completely into the base.

11. Replace the access cover panel.

12. Re-connect the lathe to power and point the nozzle into the chip drawer.

13. Turn the master power switch ***ON***, then reset the STOP button.

14. Turn the coolant pump ***ON*** to verify that fluid cycles properly, then turn it ***OFF***.

Machine Storage

To prevent the development of rust and corrosion, the lathe must be properly prepared if it will be stored for a long period of time. Doing this will ensure the lathe remains in good condition for later use.

To prepare the lathe for storage:

1. Run the lathe and bring all gearboxes to operating temperature, then drain and refill them with clean oil.

2. Pump out the old coolant, then add a few drops of way oil and blow out the lines with compressed air.

3. DISCONNECT LATHE FROM POWER!

4. Thoroughly clean all unpainted, bare metal surfaces, then apply a liberal coat of way oil, heavy grease, or rust preventative. Take care to ensure these surfaces are completely covered but that the rust preventative or grease is kept off of painted surfaces.

5. Lubricate the machine as outlined in the lubrication section. Be sure to use an oil can to purge all ball oilers and oil passages with fresh oil.

6. Loosen or remove the V-belts so they do not become stretched during the storage period. (Be sure to place a maintenance note near the power button as a reminder that the belts have been loosened or removed.)

7. Place a few moisture absorbing desiccant packs inside of the electrical box.

8. Cover the lathe and place it in a dry area that is out of direct sunlight and away from hazardous fumes, paint, solvents, or gas. Fumes and sunlight can bleach or discolor paint and make the chuck guard cloudy.

9. Every few months, rotate by hand all gear-driven components a few times in several gear selections. This will keep the bearings, bushings, gears, and shafts well lubricated and protected from corrosion—especially during the winter months.

Slide the carriage, micrometer stop, tailstock, and steady rest down the lathe bed to make sure that way spotting is not beginning to occur.

Backlash Adjustment

Backlash is the amount of free play felt while changing rotation directions with the handwheel. This can be adjusted on the compound rest and cross slide leadscrews. Before beginning any adjustment, make sure that all associated components have been cleaned and lubricated.

NOTICE

Reducing backlash to less than 0.002" is impractical and can lead to accelerated wear of the wedge, nut, and leadscrew. Avoid the temptation to overtighten the backlash set screw while adjusting.

Compound Rest

Tools Needed: **Qty**
Hex Wrench 3mm 1

The compound rest backlash is adjusted by tightening the set screws shown in **Figure 111**. When these screws are adjusted against the leadscrew nut, they offset part of the nut to remove play between the nut and leadscrew.

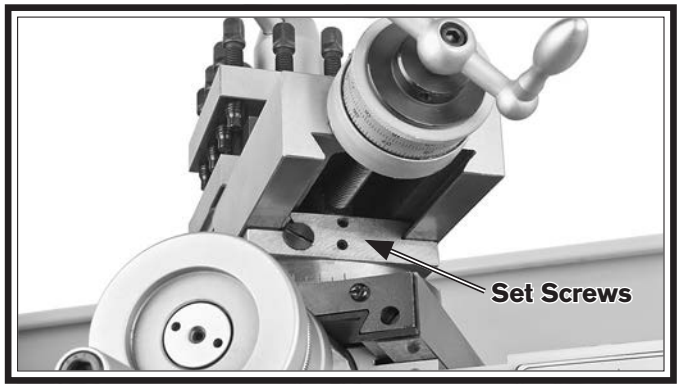

Figure 111. Compound rest backlash adjustment set screws.

To adjust the backlash, rock the handwheel back and forth, and tighten the screws slowly until the backlash is approximately 0.002"–0.003", as indicated on the graduated dial.

If you end up adjusting the nut too tight, loosen the set screws, tap the compound rest a few times with a rubber or wooden mallet, and turn the handwheel slowly back and forth until it moves freely—then try again.

Cross Slide

Tools Needed: **Qty**
Hex Wrench 3mm 1
Hex Wrench 5mm 1

The cross slide backlash is adjusted by loosening all four cap screws shown in **Figure 112**, then tightening the center set screw. This will push down on a wedge and force the leadscrew nut apart, taking up lash between the nut and leadscrew.

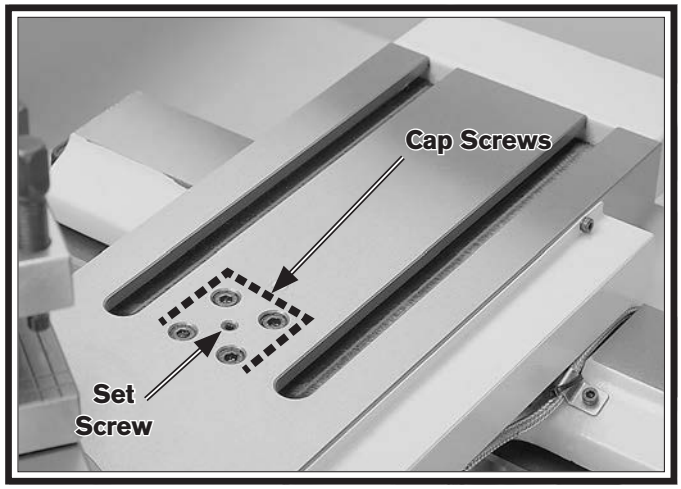

Figure 112. Cross slide backlash adjustment screws.

To adjust the backlash, remove the compound rest and loosen the four cap screws. Then, rock the cross slide handwheel back and forth, and tighten the set screw slowly until the backlash is at approximately 0.002"–0.003" as indicated on the graduated dial.

If you end up adjusting the nut too tight, loosen the set screw, tap the cross slide a few times with a rubber or wooden mallet, and turn the handwheel slowly back and forth, until the handle turns freely—then try again.

Remember to re-tighten the four cap screws when you are finished.

Leadscrew End Play Adjustment

After a long period of time, you may find that the leadscrew develops a small amount of end play. This end play can be removed with an easy adjustment.

Tools Needed: **Qty**
Open End Wrench 36mm or 1 7/16" 1
Hex Wrench 3mm 1

To remove leadscrew end play:

1. DISCONNECT LATHE FROM POWER!

2. Loosen both retaining nut set screws (see **Figure 113**).

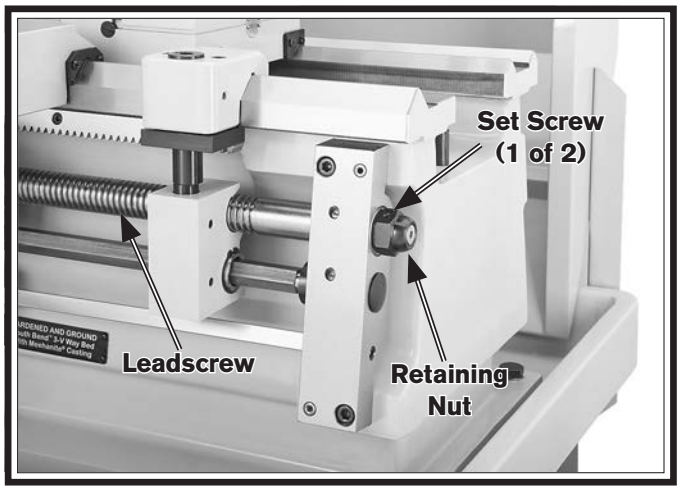

Figure 113. Leadscrew end play adjustment.

3. Engage the half nut lever.

4. Rotate the carriage handwheel to move the carriage back slightly, then tighten the retaining nut at the same time until the end play is removed.

5. Tighten both set screws to secure the setting.

Gib Adjustment

The goal of adjusting the gib screws is to remove sloppiness or "play" from the ways without over-adjusting them to the point where they become stiff and difficult to move.

In general, loose gibs cause poor finishes and tool chatter; however, over-tightened gibs cause premature wear and make it difficult to turn the handwheels.

Important: Before adjusting the gibs, loosen the locks for the device so that the gibs can freely slide during adjustment, then lubricate the ways.

The gibs are tapered and held in position by a screw at each end. To adjust the gib, turn one screw ¼ turn clockwise and the other screw ¼ turn counterclockwise, so both screws move in the same direction and the same amount. Test the feel of the sliding component by turning the handwheel, and adjust the gib screws as necessary to make it tighter or looser.

The gib adjustment process usually requires some trial-and-error. Repeat the adjustment process as necessary until you find the best balance between loose and stiff movement. Most machinists find that the ideal gib adjustment is one where a small amount of drag or resistance is present, yet the handwheels are still easy to move.

Figures 114–118 show the location of the adjustment screws for each gib on this machine.

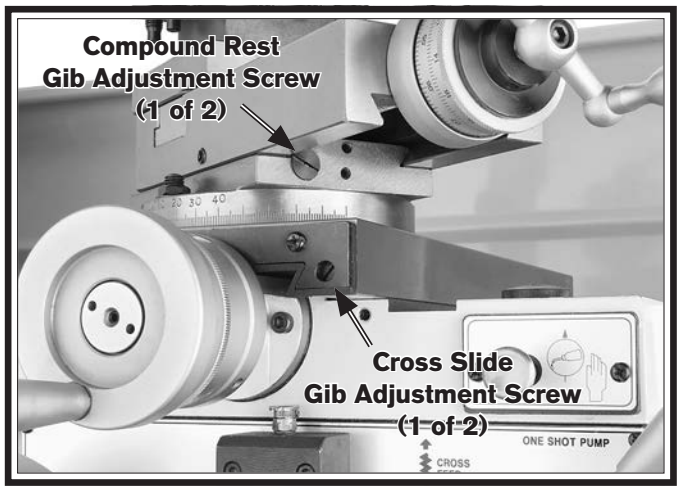

Figure 114. Compound and cross slide gib adjustment screws.

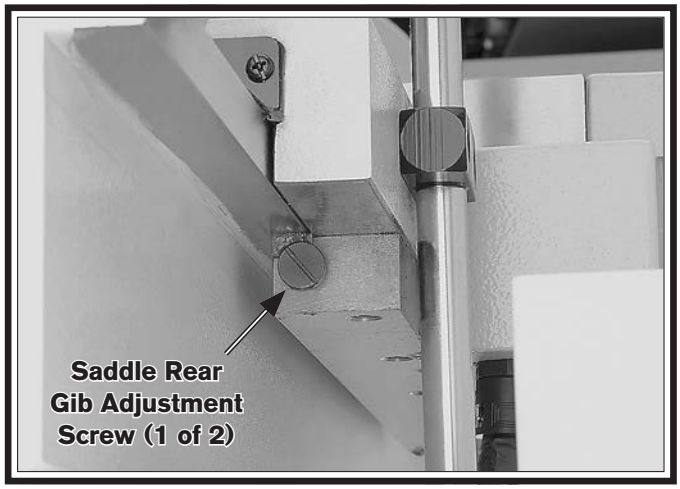

Figure 115. One of two rear saddle gib adjustment screws.

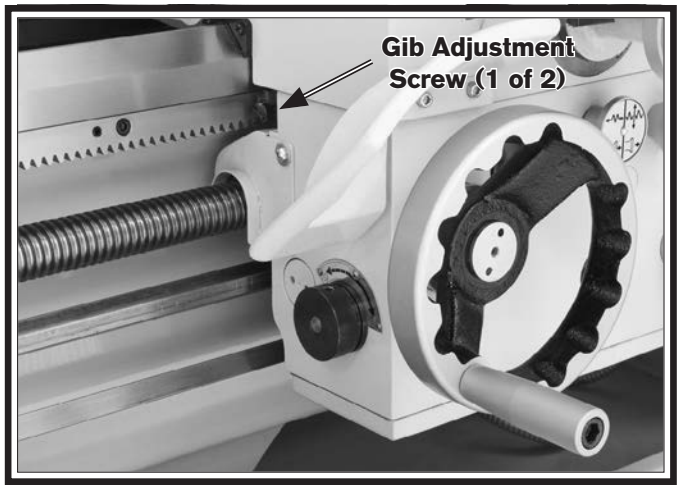

Figure 116. Front saddle gib adjustment screw.

Note: Remove the thread dial body and the carriage lock clamp to access the saddle gib adjustment screw on the tailstock side (see **Figure 117**).

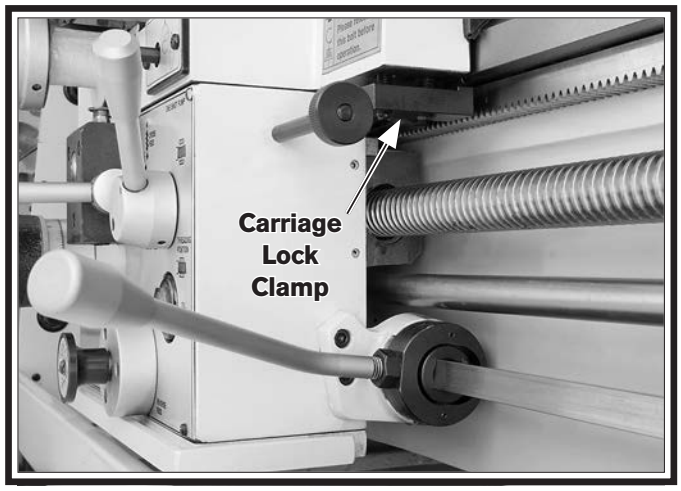

Figure 117. Carriage lock clamp.

Note: Before adjusting the tailstock gib, loosen the clamping hex bolts underneath both ends of the tailstock (see **Figure 118**) to release the clamping pressure between the upper and lower castings. Test the gib adjustment by using the offset adjustment screws. When you are satisfied with the setting, retighten the clamping hex bolts.

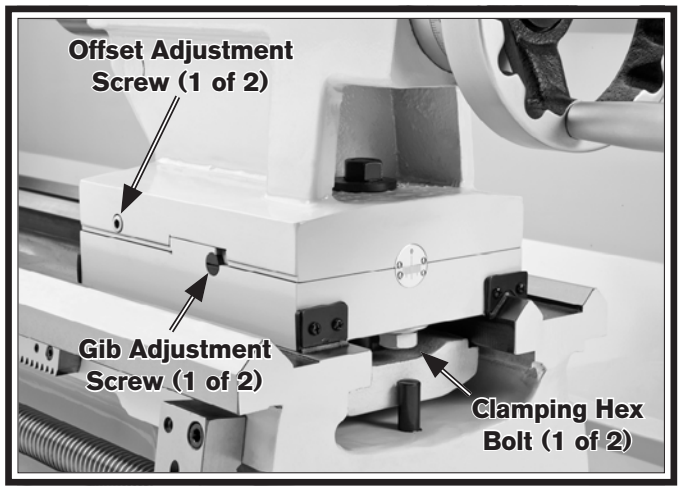

Figure 118. Tailstock gib adjustment controls.

Half Nut Adjustment

The clamping pressure of the half nut is fully adjustable with a gib that can be loosened or tightened by two set screws. Use this procedure to adjust the half nut if it becomes loose from wear, or it is too tight for your preferences. A half nut that is too loose will make it difficult to produce accurate work. A half nut that is too tight will increase the rate of wear on itself and the leadscrew.

Tool Needed: **Qty**
Hex Wrench 3mm 1

To adjust the half nut:

1. Disengage the half nut, then remove the thread dial.

2. Turn the two set screws (see **Figure 119**) clockwise to tighten the half nut and counterclockwise to loosen it.

   Make sure to turn the set screws in even amounts so that one end of the gib does not become tighter than the other.

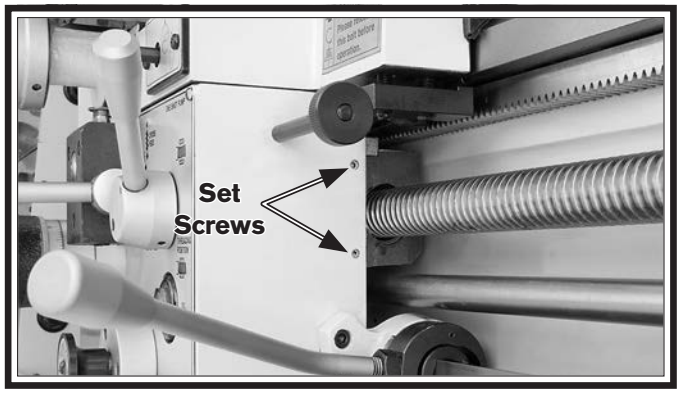

Figure 119. Half nut gib adjustment.

3. Engage/disengage the half nut several times and notice how it feels. The half nut is correctly adjusted when it has a slight drag while opening and closing. The movement should not be too stiff or too sloppy.

4. Repeat **Steps 2–3**, if necessary, until you are satisfied with the half nut pressure.

5. Re-install the thread dial.

V-Belts

V-belts stretch and wear with use, so check the tension on a monthly basis to ensure optimal power transmission. Replace all of the V-belts as a matched set if any of them show signs of glazing, fraying, or cracking.

Tools Needed: **Qty**
Phillips Screwdriver #2 1
Open End Wrench 24mm..... 1

To adjust the V-belts:

1. DISCONNECT LATHE FROM POWER!

2. Remove the motor access covers shown in **Figure 120**.

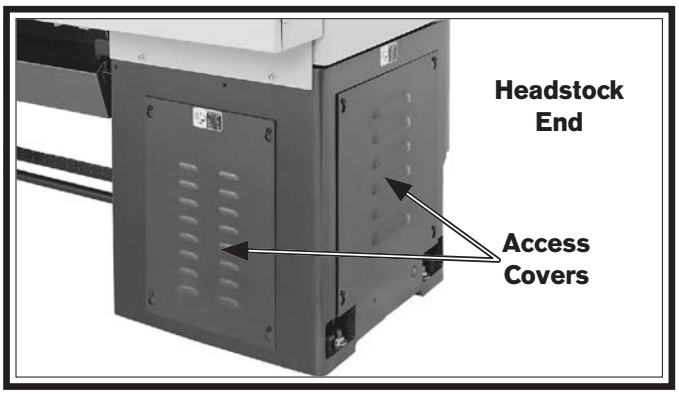

Figure 120. Locations of motor access covers.

3. Adjust the hex nuts on the motor mount bolts shown in **Figure 121** to move the motor mount plate up or down and adjust the V-belt tension. When correctly tensioned, each belt should have about ¾" deflection when pressed firmly (see **Figure 121**).

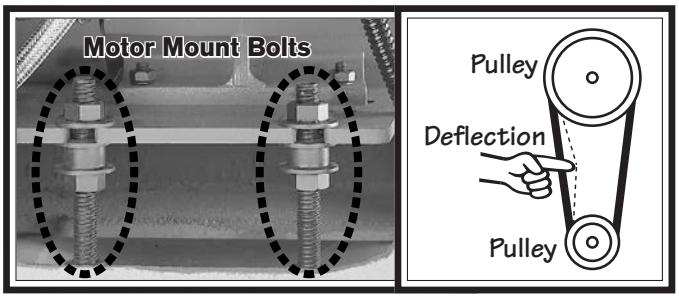

Figure 121. V-belt adjustment.

4. Tighten the hex nuts against both sides of the motor mount plate to prevent it from moving out of adjustment during operation, then re-install the access covers.

Spindle Clutch Adjustment

This lathe uses a dual-clutch mechanism to drive the spindle. The clutch assembly will need to be adjusted if you have difficulty engaging the forward or reverse spindle lever position or if the chuck takes more than 3–4 seconds to reach full speed when set at the highest spindle speed.

⚠WARNING

DISCONNECT LATHE FROM POWER before performing this procedure. Failure to do so could result in accidental startup, electrical shock, entanglement or crushing injury, or property damage.

DO NOT touch hot components. During use, the clutch and other internal components can become very hot. Wear heavy gloves or allow components to cool before service.

Wear safety glasses throughout the entire procedure. Oil may splash and spring-loaded components may be thrown, resulting in injury or loss of vision.

DO NOT rotate the spindle or input pulley by hand while hands or fingers are inside the headstock. Doing so may cause entanglement and serious crushing injuries.

Support components while their mounting fasteners are being removed. Components may fall or swing outward if they are not properly supported, resulting in crushing or laceration injuries.

Required for Procedure	Qty
Wrench 4mm	1
Another Person	1

To adjust the spindle clutch:

1. DISCONNECT LATHE FROM POWER!

2. Move the spindle lever to the center (neutral) position.

3. Have another person support the electrical cabinet, then remove the three button-head cap screws shown in **Figure 122**.

Figure 122. Removing electrical cabinet fasteners.

4. Tilt the cabinet out enough to allow access to the clutch access cover, being careful not to strain the lamp or chuck guard safety switch cords. If necessary, remove these components to prevent straining them.

   Rest the cabinet on a stable support.

5. Remove the clutch access panel from the rear of the headstock to expose the dual-clutch mechanism (see **Figure 123**).

Figure 123. Spindle access panel.

6. Study **Figure 124** to determine the adjustments that will be required in the following steps.

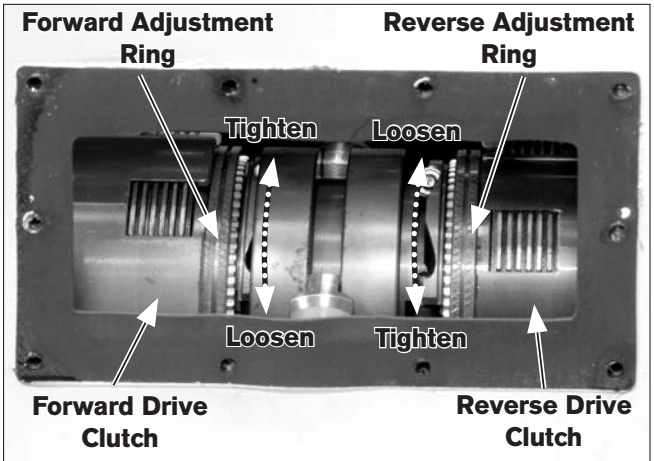

Symptom	Required Action
Spindle lever will not engage FORWARD.	Loosen Forward Adjustment Ring as needed.
Spindle lever will not engage REVERSE.	Loosen Reverse Adjustment Ring as needed.
Chuck takes more than 3–4 seconds to reach full speed in FORWARD.	Tighten Forward Adjustment Ring one notch.
Chuck takes more than 3–4 seconds to reach full speed in REVERSE.	Tighten Reverse Adjustment Ring one notch.

Figure 124. Clutch adjustment overview.

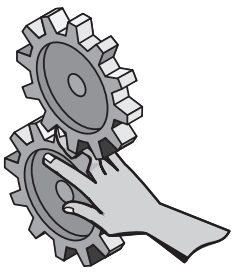

⚠WARNING

DO NOT rotate the spindle or input pulley while any body part is inside the headstock. Doing so may cause entanglement and serious crushing injuries.

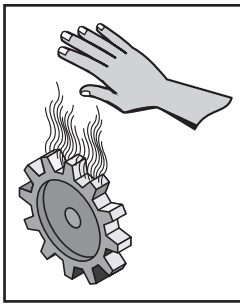

⚠CAUTION

Clutch components get hot during operation. To avoid burn injuries, wear heavy leather gloves or allow components to cool before service.

7. Use a metal scribe or permanent marker to mark the position of the adjustment ring relative to its clutch assembly, then use a small screwdriver to pry and slide the necessary adjustment ring away from its corresponding clutch to unlock it (see **Figure 125**).

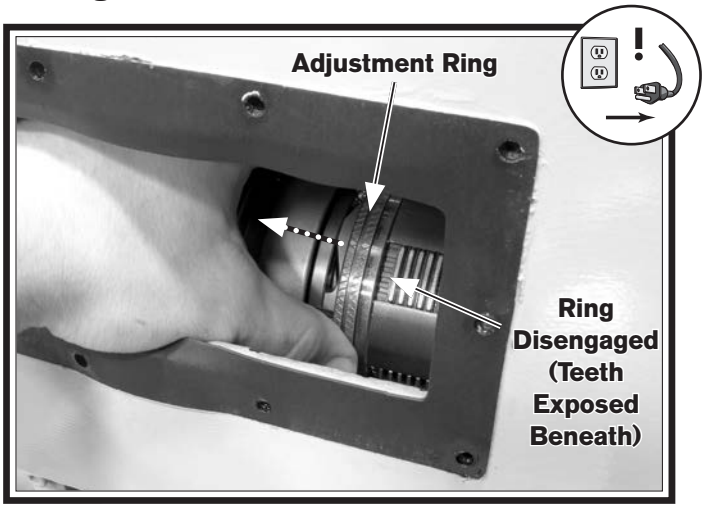

Figure 125. Disengaging adjustment ring (reverse side shown).

If you have difficulty disengaging the ring, make sure the spindle lever is in the middle (neutral) position. When the ring is fully disengaged, it will spin freely.

— If you are loosening the adjustment ring, continue to **Step 8**.

— If you are tightening the adjustment ring, skip to **Step 9.**

8. Loosen the appropriate adjustment ring one notch, then remove your hand from inside the headstock. Have an assistant try to engage the troublesome lever position while you manually rotate the input pulley on the headstock. DO NOT rotate the pulley while your hands are inside the headstock.

Tip: *When rotating the adjustment ring, hold the adjustment ring stationary and rotate the input pulley to make the adjustment.*

Continue loosening and testing until the lever engages the troublesome position. When you are satisfied with the loosened setting, slide the adjustment ring towards its clutch assembly to lock it in position (see **Figure 126**). Skip to **Step 10**.

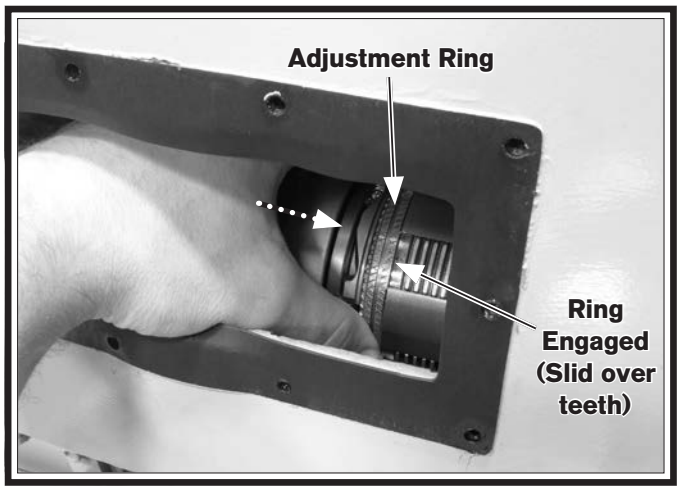

Figure 126. Engaging adjustment ring (reverse side shown).

9. Tighten the adjustment ring one notch, then slide the adjustment ring towards its clutch assembly to lock it in position.

Tip: *When rotating the adjustment ring, hold the adjustment ring stationary and rotate the input pulley to make the adjustment.*

NOTICE

Do not attempt to over-tighten the clutch to reduce spin-up time. 3-4 seconds is the normal time required for the spindle to reach full speed. Overtightening the clutch may result in damage and improper lathe function.

10. Replace the clutch access cover, pivot the electrical cabinet back into position and secure it with the fasteners removed in **Step 3**. If you removed the chuck guard safety switch or work lamp, replace them.

11. Re-connect the lathe to power, then check the function of the lathe. Test on the highest speed setting allowed for the chuck being used. Use a 3-jaw chuck with no workpiece mounted. The spindle should take no more than 3–4 seconds to reach full speed. Repeat the clutch adjustment procedure as needed.

Leadscrew Shear Pin Replacement

The leadscrew is secured to a connecting collar that is part of the headstock drivetrain with the use of a soft-metal shear pin. The shear pin is designed to break and disengage the power transfer to the leadscrew to help protect more expensive lathe components in the case of a carriage crash or the lathe is overloaded.

Contact South Bend to order a replacement shear pin (Part Number PSB10160927) or use the specifications in **Figure 127** to fabricate your own.

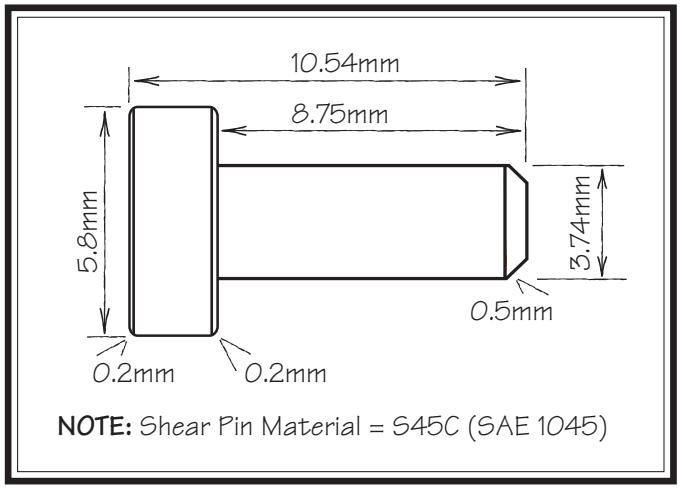

Figure 127. Shear pin specifications.

Tools Needed:	Qty
External Retaining Ring Pliers #1	1
Magnet	1
Safety Goggles	1
Blow Gun w/Compressed Air	1
Light Machine Oil	As needed

To replace the shear pin:

1. DISCONNECT LATHE FROM POWER!
2. Clean debris and grime from the shear pin area (see **Figure 128**).

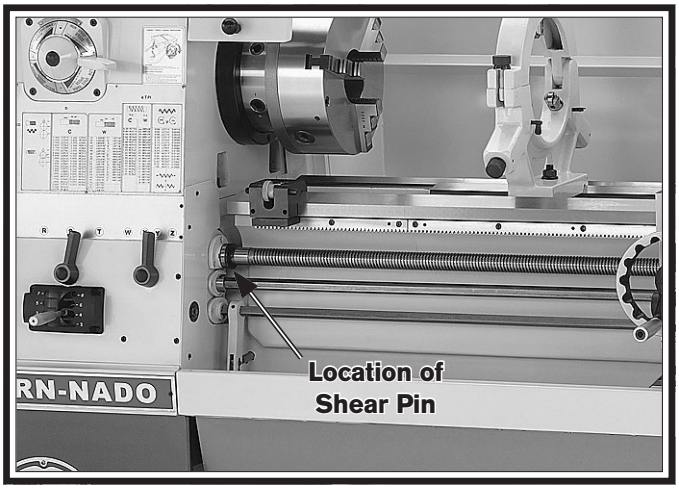

Figure 128. Location of shear pin.

3. Rotate the shroud washer on the leadscrew (see **Figure 129**) so that the cutout lines up with the shear pin head.

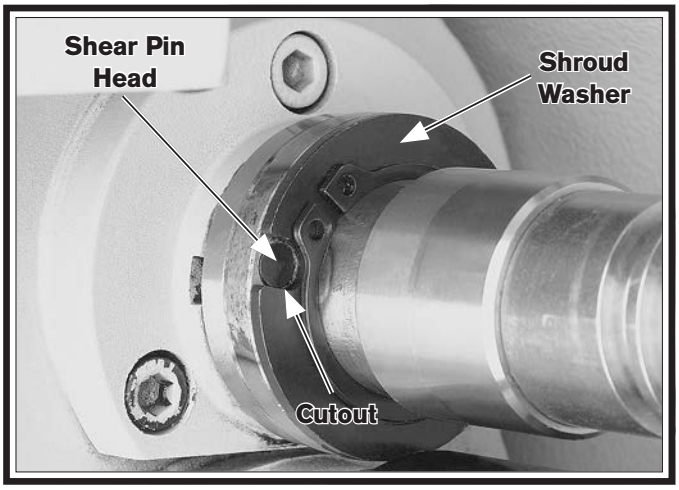

Figure 129. Shroud washer and shear pin alignment.

4. Put on safety glasses.

NOTICE

If you fabricate your own shear pin, make sure to use the material and dimensions specified in Figure 127. Otherwise, the shear pin may not provide the intended protection and lathe damage could result.

5. Move the retaining ring shown in **Figure 130** away from the shroud washer, then move the shroud washer away from the shear pin and against the retaining ring. This will create room for you to remove the shear pin.

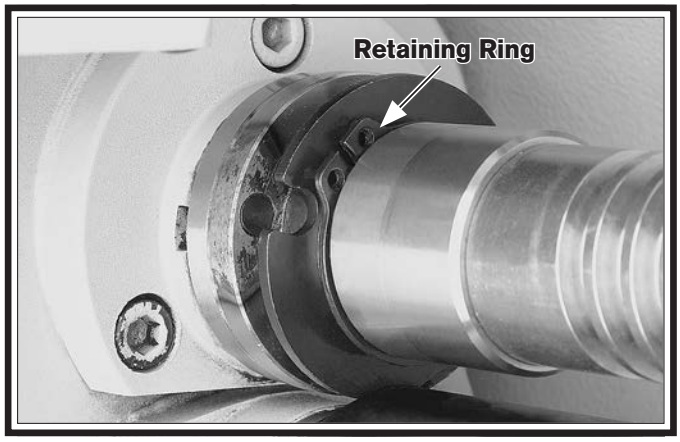

Figure 130. Shear pin access.

6. Use the magnet to remove the shear pin head.

7. Rotate the lathe spindle to line up the inner and outer bores, as shown in **Figure 131**, and use the magnet to remove the other half of the broken shear pin.

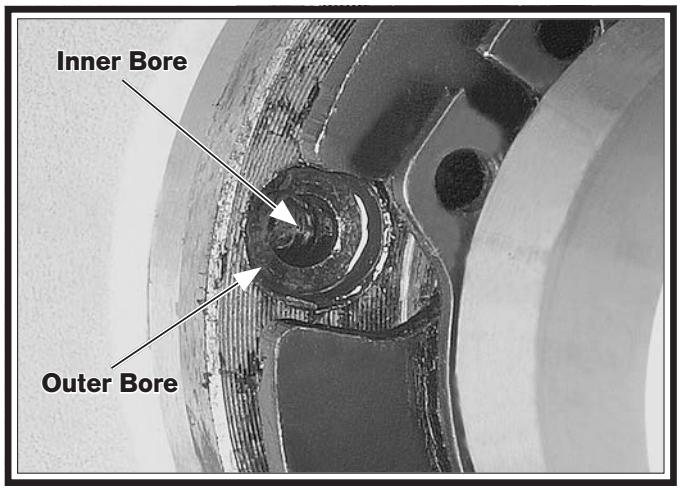

Figure 131. Shear pin bores aligned.

8. Put on safety goggles, insert the blow gun tip into the shear pin hole and blow out the hole with compressed air.

9. Put a drop of oil in the hole, then insert the new shear pin into the bore, as shown in **Figure 132**.

Note: If the pin does not freely slide into the bore, DO NOT use a hammer on the pin or you may permanently damage the shear mechanism and bore, which would make it nearly impossible to remove if it breaks again. Instead, take the time to carefully line up the two bores so it slides in easily. Chamfer the end of the pin if necessary to make it easier to insert.

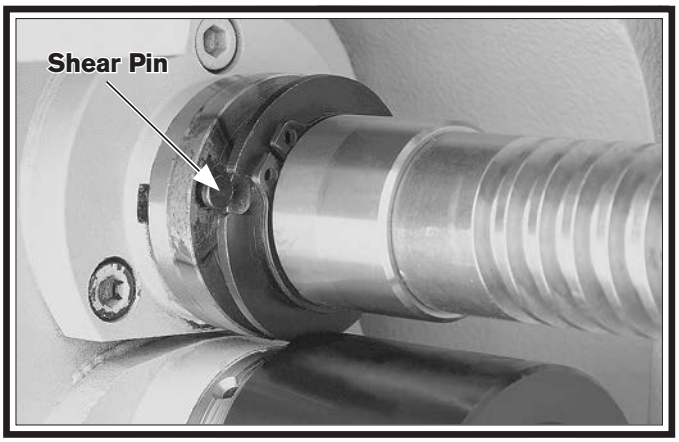

Figure 132. New shear pin installed in bore.

10. With the pin completely seated in the bore and the head flush with the leadscrew shoulder, slide the shroud washer against the shoulder, then rotate the washer 180° to completely cover the head of the shear pin, as shown in **Figure 133**.

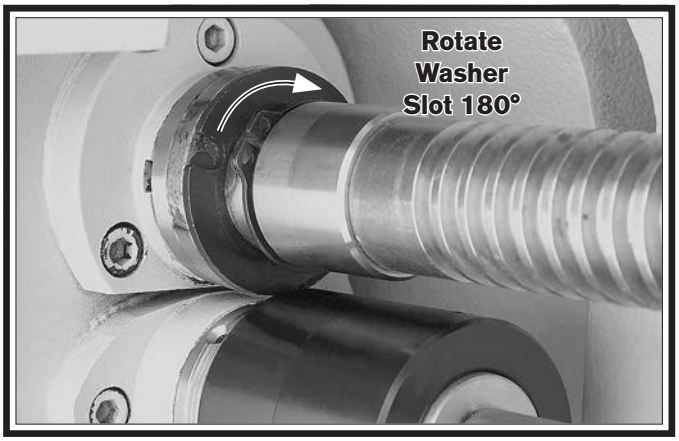

Figure 133. Shroud washer positioning.

11. Return the retaining ring against the shroud washer and position the retaining ring ears over the shear pin head, as shown in **Figure 134**. This will prevent the shear pin from falling out if the shroud washer should rotate during operation.

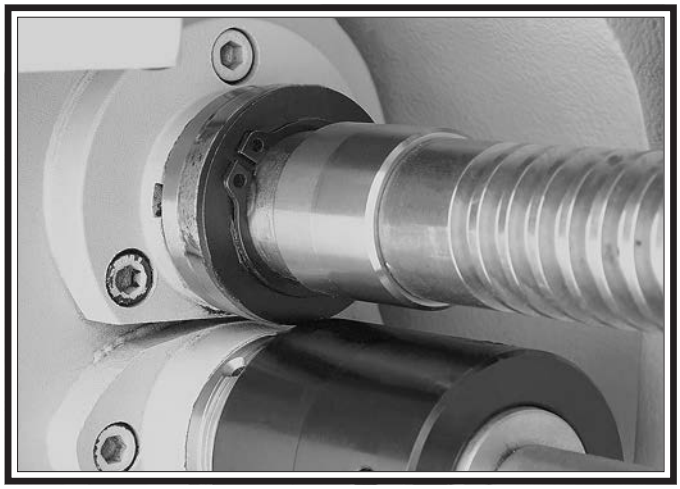

Figure 134. Retaining ring positioned with ears in front of pin access groove.

Gap Insert Removal & Installation

The gap insert directly under the spindle (see **Figure 135**) can be removed to create additional space for turning large diameter parts.

The gap insert was installed, then ground flush with the bed at the factory to ensure a precision fit and alignment. Therefore, if the gap insert is removed, it may be difficult to re-install with the same degree of accuracy.

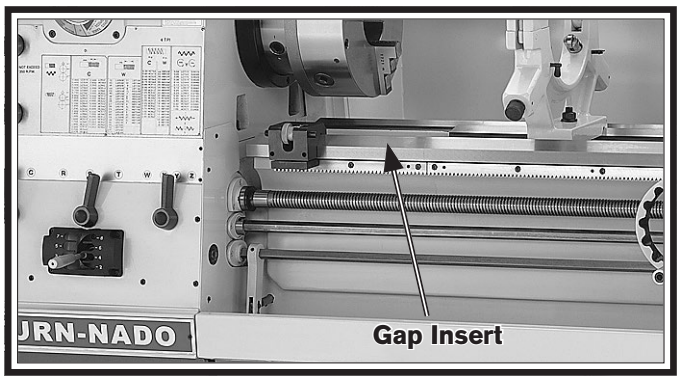

Figure 135. Gap insert.

Tools Needed: **Qty**

Hex Wrenches 6mm 1
Hex Wrench 8mm 1
Wrench 17mm 1
Dead Blow Hammer 1

Gap Removal

1. Remove the four gap-bed cap screws, shown in **Figure 136**.

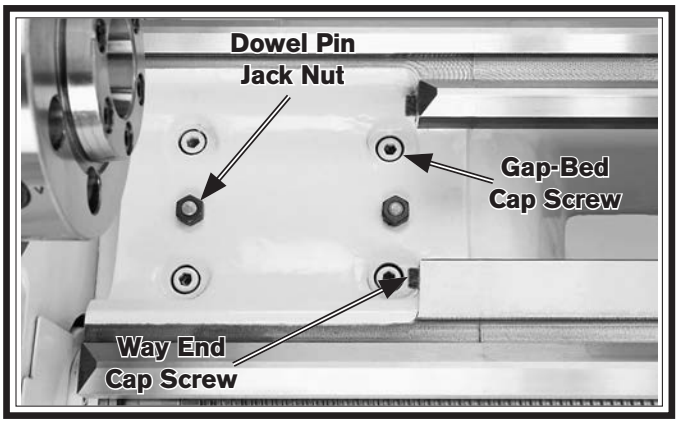

Figure 136. Fasteners holding gap in place.

2. Remove the two way-end cap screws.

3. Tighten the two dowel-pin jack nuts until the pins are pulled free from the gap insert.

4. Tap the outside of the gap insert with a dead blow hammer to loosen it, then remove it.

Gap Installation

1. Use mineral spirits and a clean lint-free rag to clean the mating surfaces of the gap, bed, and ways. If necessary, stone the mating surfaces to remove scratches, dings, or burrs.

2. Wipe a thin layer of light machine oil on the mating surfaces.

3. Place the gap insert into the gap and use a dead-blow hammer to align the insert with the lathe bed.

4. Back off the dowel pin jack nuts, and lightly tap the dowel pins back into their respective holes until they are seated. This process will further help align the gap insert and bed mating surfaces.

5. Install all fasteners and lightly snug them in place.

6. Mount a dial indicator with a magnetic base to the top of the saddle to indicate alignment.

7. First test the peak of the two prisms of the gap insert that the saddle rides on, then test the flanks of the prisms.

8. Tighten the gap bed cap screws in an alternating manner and tap the side of the gap insert into alignment.

9. Inspect the gap alignment 24 hours later to make sure the gap is still aligned. If necessary, loosen the gap bed cap screws and repeat **Steps 7–8** until the insert is properly aligned.

If you need replacement parts, or if you are unsure how to do any of the solutions given here, feel free to call us at (360) 734-1540.

Symptom	Possible Cause	Possible Solution
Machine does not start or a circuit breaker trips.	**1.** (First time operation only) Lathe is wired out of phase.	**1.** Correct out-of-phase wiring (refer to **Page 92** for details).
	2. STOP button is engaged or at fault.	**2.** Rotate button clockwise until it pops out to reset it for operation; replace if not working properly.
	3. Spindle switch(es) are at fault.	**3.** Replace bad switch(es).
	4. Power supply is switched **OFF** at master power switch or breaker.	**4.** Make sure master power switch and circuit breaker are turned **ON**.
	5. Wall fuse/circuit breaker is blown/ tripped; short in electrical system; start-up load too high for circuit.	**5.** Verify circuit is rated for machine amp load; troubleshoot and repair cause of overload; replace weak breaker; find/repair electrical short.
	6. Fuse has blown in machine electrical box.	**6.** Replace fuse; determine if overload is due to heavy operation; ensure power source has high enough voltage and power cord is correctly sized.
	7. One or more safety switches or brake switch are engaged.	**7.** Verify electrical box door, chuck guard, spindle, and brake switches are not engaged.
	8. Thermal overload relay has tripped.	**8.** Turn the thermal relay cut-out dial to increase working amps and push the reset pin. Replace if tripped multiple times (weak relay).
	9. Safety/brake switch(es) at fault.	**10.** Test all switches and replace as necessary.
	10. Contactor not getting energized/has burned contacts.	**11.** Test for power on all legs and contactor operation. Replace unit if faulty.
	11. Wiring is open/has high resistance.	**12.** Check for broken wires or disconnected/corroded connections, and repair/replace as necessary.
	12. Motor is at fault.	**13.** Test/repair/replace.
Loud, repetitious noise coming from lathe at or near the motor.	**1.** Pulley set screws or keys are missing or loose.	**1.** Inspect keys and set screws. Replace or tighten if necessary.
	2. Motor fan is hitting the cover.	**2.** Tighten fan, shim cover, or replace items.
Motor overheats.	**1.** Motor overloaded.	**1.** Reduce load on motor.
Motor is loud when cutting, or bogs down under load.	**1.** Excessive depth of cut or feed rate.	**1.** Decrease depth of cut or feed rate.
	2. Spindle speed or feed rate wrong for cutting operation.	**2.** Refer to the feeds and speeds charts in **Machinery's Handbook** or a speeds and feeds calculator on the internet.
	3. Cutting tool is dull.	**3.** Sharpen or replace the cutting tool.

Symptom	Possible Cause	Possible Solution
Entire machine vibrates upon startup and while running.	**1.** Workpiece is unbalanced.	**1.** Re-install workpiece as centered with the spindle bore as possible.
	2. Workpiece is hitting stationary object.	**2.** Stop lathe immediately and correct interference problem.
	3. Loose or damaged V-belt(s).	**3.** Re-tension/replace the V-belt(s) as necessary (see **Page 80**).
	4. V-belt pulleys are not properly aligned.	**4.** Align the V-belt pulleys.
	5. Chuck or faceplate is unbalanced.	**5.** Re-balance chuck or faceplate; contact a local machine shop for help.
	6. Gears not aligned in headstock or no backlash.	**6.** Adjust gears and establish backlash.
	7. Broken gear or bad bearing.	**7.** Replace broken gear or bearing.
	8. Spindle bearings at fault.	**8.** Reset spindle bearing preload or replace worn spindle bearings.
Bad surface finish.	**1.** Wrong spindle speed or feed rate.	**1.** Adjust for appropriate spindle speed and feed rate.
	2. Dull tooling or poor tool selection.	**2.** Sharpen tooling or select a better tool for the intended operation.
	3. Tool height not at spindle centerline.	**3.** Adjust tool height to spindle centerline (see **Page 51**).
	4. Too much play in gibs.	**4.** Tighten gibs (see **Page 78**).
Tapered tool difficult to remove from tailstock quill.	**1.** Quill is not retracted all the way back into the tailstock.	**1.** Turn the tailstock handwheel until it forces the tapered tool out of quill.
	2. Contaminants not removed from taper before inserting into quill.	**2.** Clean the taper and bore and re-install tapered tool.
Cross slide, compound, or carriage feed has sloppy operation.	**1.** Gibs are out of adjustment.	**1.** Adjust gib screw(s) (see **Page 78**).
	2. Handwheel is loose or backlash is high.	**2.** Tighten handwheel fasteners, adjust handwheel backlash to a minimum (see **Page 77**).
	3. Leadscrew mechanism worn or out of adjustment.	**3.** Adjust leadscrew to remove end play (see **Page 78**).
	4. Ways are loaded with grime or chips.	**4.** Clean the ways and re-lubricate.
Cross slide, compound, or carriage feed handwheel is hard to move.	**1.** Dovetail slides loaded with shavings, dust, or grime.	**1.** Remove gibs, clean ways/dovetails, lubricate, and re-adjust gibs.
	2. Gib screws are too tight.	**2.** Loosen gib screw(s) slightly (see **Page 78**).
	3. Backlash setting too tight (cross slide only).	**3.** Slightly loosen backlash setting (see **Page 78**).
	4. Bedways are dry.	**4.** Lubricate bedways and handles.
Cutting tool or machine components vibrate excessively during cutting.	**1.** Tool holder not tight enough.	**1.** Check for debris, clean, and retighten.
	2. Cutting tool sticks too far out of tool holder; lack of support.	**2.** Re-install cutting tool so no more than ⅓ of the total length is sticking out of tool holder.
	3. Gibs are out of adjustment.	**3.** Adjust gib screws at affected component (see **Page 78**)
	4. Dull cutting tool.	**4.** Replace or resharpen cutting tool.
	5. Incorrect spindle speed or feed rate.	**5.** Use the recommended spindle speed.

Symptom	Possible Cause	Possible Solution
Workpiece is tapered.	**1.** Spindle and tailstock centerlines are not properly aligned with each other.	**1.** Realign the tailstock to the headstock spindle bore centerline (see **Page 45**).
Chuck jaws will not move or do not move easily.	**1.** Chips lodged in the jaws or scroll plate.	**1.** Remove jaws, clean and lubricate scroll plate, then replace jaws.
Carriage will not feed or is hard to move.	**1.** Gears are not all engaged.	**1.** Adjust gear levers.
	2. Carriage lock is tightened down.	**2.** Check to make sure the carriage lock bolt is fully released.
	3. Loose screw on the feed handle.	**3.** Tighten.
	4. Chips have loaded up on bedways.	**4.** Frequently clean away chips that load up during turning operations.
	5. Bedways are dry and in need of lubrication.	**5.** Lubricate bedways and handles.
	6. Micrometer stop is interfering.	**6.** Check micrometer stop position and adjust it as necessary (see **Page 52**).
	7. Gibs are too tight.	**7.** Loosen gib screw(s) slightly (see **Page 78**).
	8. Gears or shear pin broken.	**8.** Replace gears or shear pin (see **Page 84**).
Gear change levers will not shift into position.	**1.** Gears not aligned inside headstock.	**1.** Rotate spindle by hand with light pressure on the lever until gear falls into place.
Spindle clutch takes more than 3–4 seconds to engage.	**1.** Spindle clutch mechanism is too loose.	**1.** Adjust spindle clutch (see **Page 81**).
Difficulty engaging spindle lever.	**1.** (When new) Spindle clutch needs break-in time.	**1.** Use moderate pressure to engage spindle lever until it is broken-in.
	2. Spindle clutch is too tight.	**2.** Adjust spindle clutch (see **Page 81**).

Electrical Safety Instructions

These pages are accurate at the time of printing. In the constant effort to improve, however, we may make changes to the electrical systems of future machines. Study this section carefully. If you see differences between your machine and what is shown in this section, call Technical Support at (360) 734-1540 for assistance BEFORE making any changes to the wiring on your machine.

Shock Hazard: It is extremely dangerous to perform electrical or wiring tasks while the machine is connected to the power source. Touching electrified parts will result in personal injury including but not limited to severe burns, electrocution, or death. For your own safety, disconnect machine from the power source before servicing electrical components or performing any wiring tasks!

Wire Connections: All connections must be tight to prevent wires from loosening during machine operation. Double-check all wires disconnected or connected during any wiring task to ensure tight connections.

Modifications: Using aftermarket parts or modifying the wiring beyond what is shown in the diagram may lead to unpredictable results, including serious injury or fire.

Motor Wiring: The motor wiring shown in these diagrams is current at the time of printing, but it may not match your machine. Always use the wiring diagram inside the motor junction box.

Circuit Requirements: Connecting the machine to an improperly sized circuit will greatly increase the risk of fire. To minimize this risk, only connect the machine to a power circuit that meets the minimum requirements given in this manual.

Capacitors/Inverters: Some capacitors and power inverters store an electrical charge for up to 10 minutes after being disconnected from the power source. To reduce the risk of being shocked, wait at least this long before working on capacitors.

Wire/Component Damage: Damaged wires or components increase the risk of serious personal injury, fire, or machine damage. If you notice that any wires or components are damaged while performing a wiring task, replace those wires or components before completing the task.

Experiencing Difficulties: If you are experiencing difficulties understanding the information included in this section, contact our Technical Support at (360) 734-1540.

WIRING DIAGRAM COLOR KEY

BLACK	Bk	BLUE WHITE	Bw	RED	Rd	PINK	Pk	WHITE	Wt
BLUE	Bl	GREEN	Gn	LIGHT BLUE	Lb	PURPLE	Pu	YELLOW GREEN	Yg
BROWN	Br	GRAY	Gy	ORANGE	Or	TUR-QUIOSE	Tu	YELLOW	Yl

NOTICE: **The photos and diagrams included in this section are best viewed in color. You can see them in color at www.southbendlathe.com.**

Correcting Phase Polarity

This sub-section is only provided for troubleshooting. If you discover during the test run that the lathe will not operate, or that the spindle runs backwards, the lathe may be wired out of phase.

Without the proper test equipment to determine the phase of power source legs, wiring machinery to 3-phase power may require trial-and-error. Correcting this is simply a matter of reversing the positions where two of the incoming power source wires are connected.

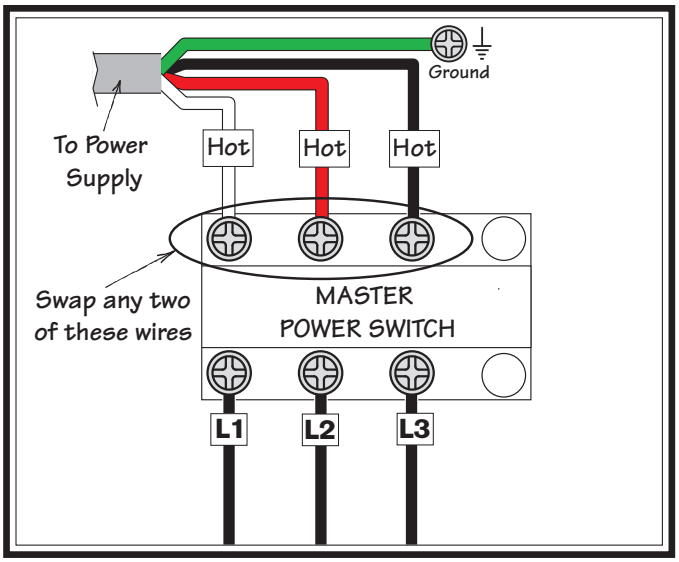

Figure 137. Swapping L1 and L2 power connections to correct out-of-phase wiring.

To correct wiring that is out of phase:

1. Push the STOP button, turn the master power switch to OFF, and disconnect the machine from power.

2. Open the electrical box and swap any two hot wires coming from the power supply, as illustrated in **Figure 137**.

3. Close and latch the electrical box, and reconnect the machine to the power source.

Wiring Overview

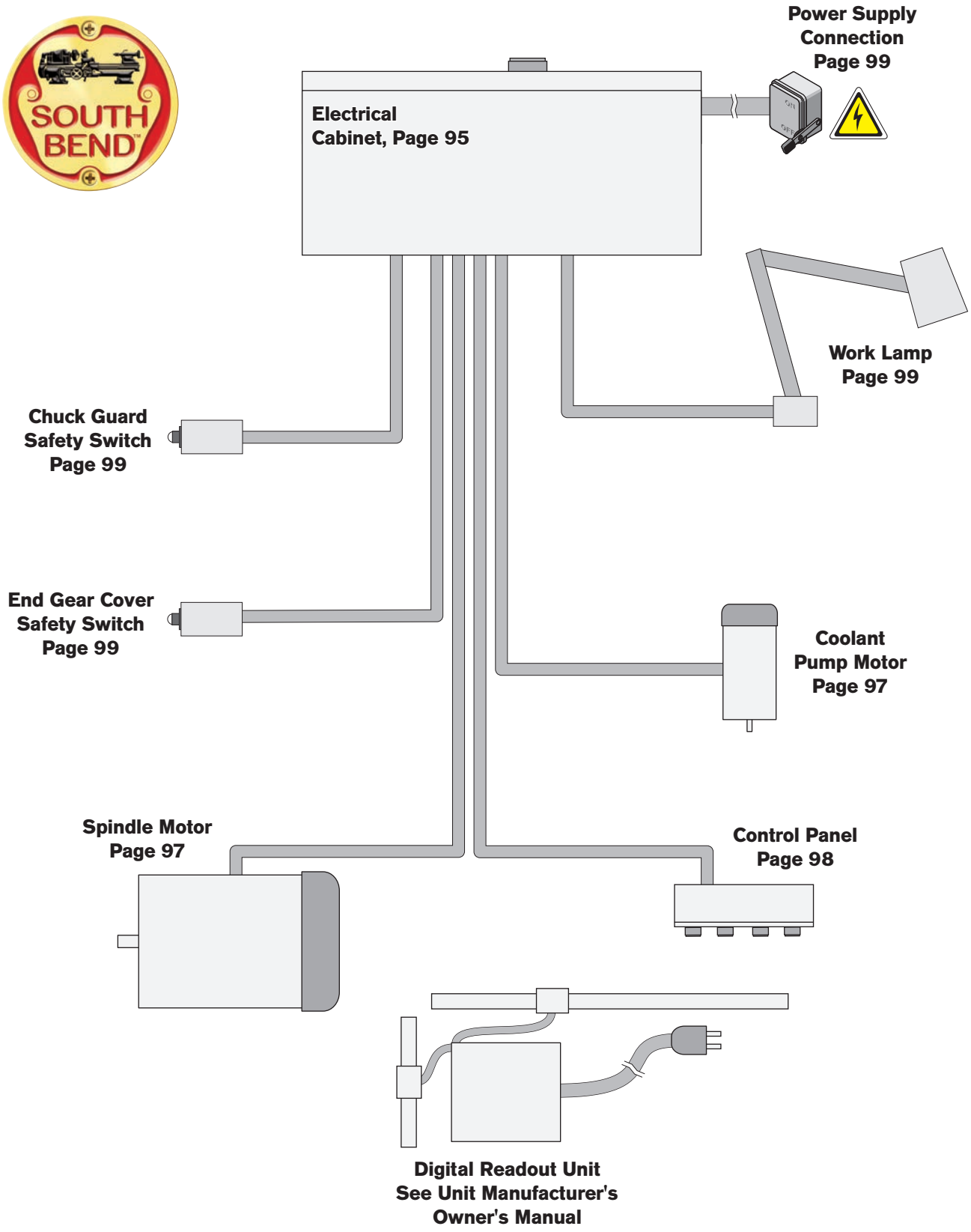

Component Location Index

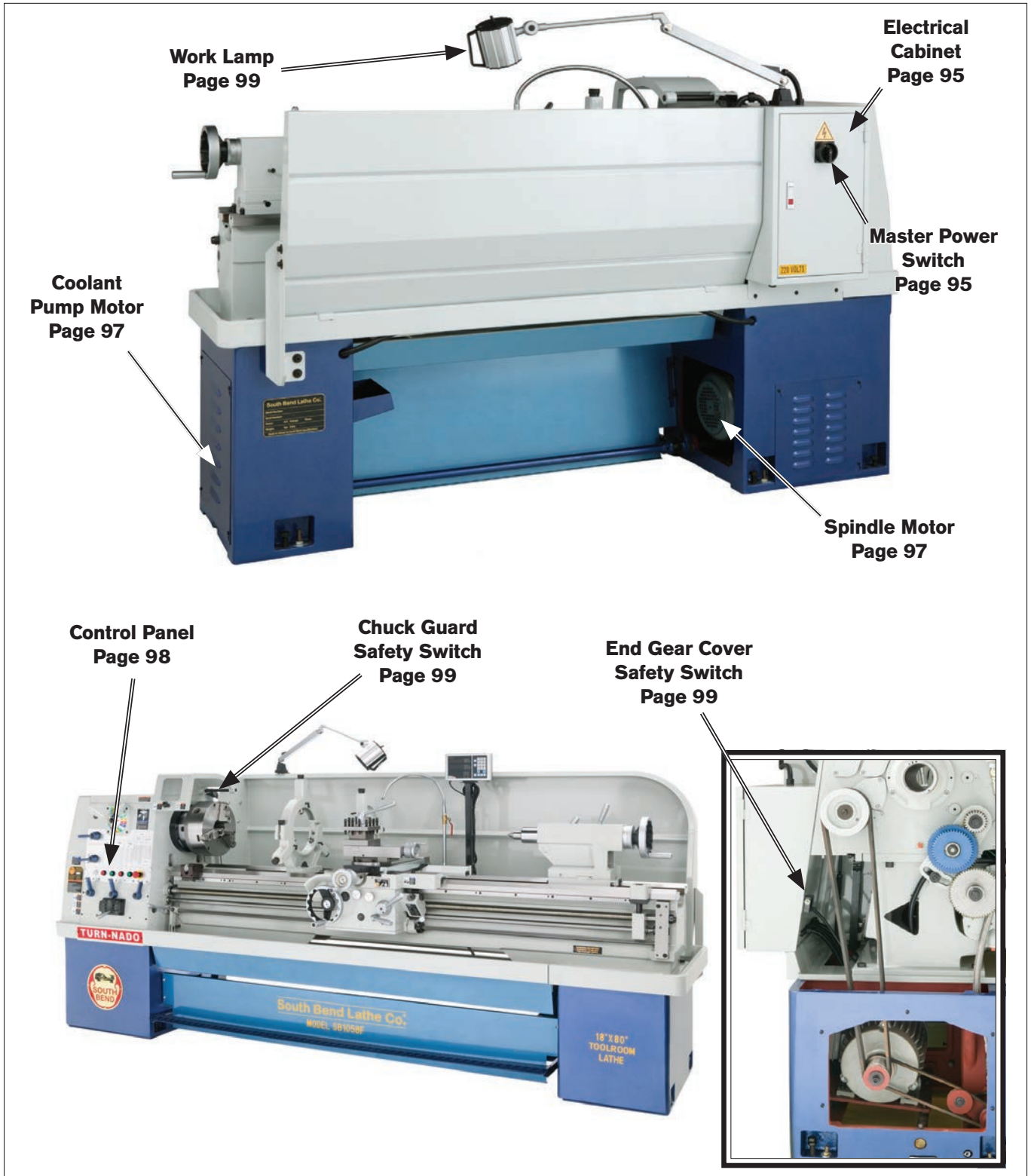

Figure 138. Component location index.

Electrical Cabinet

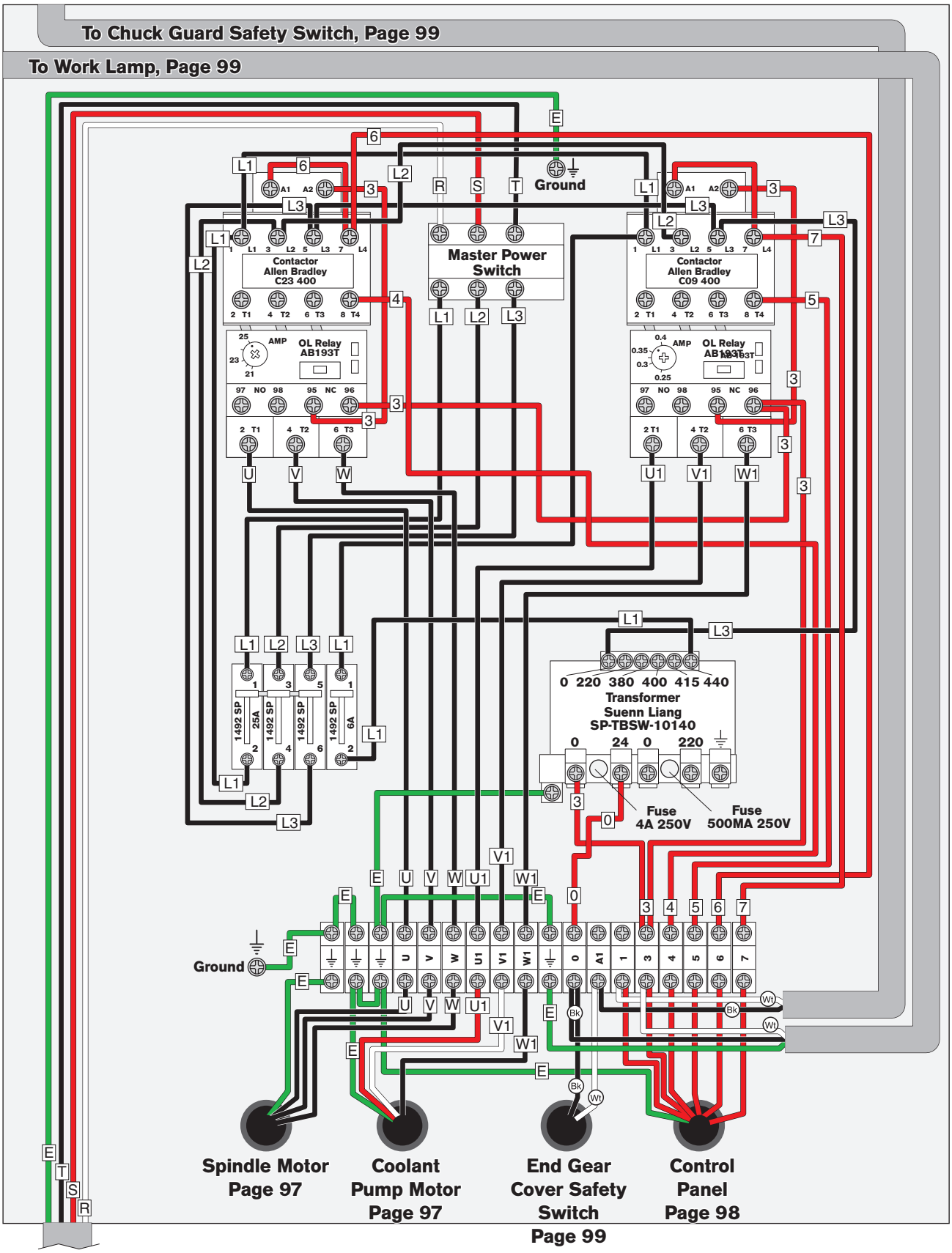

Electrical Box

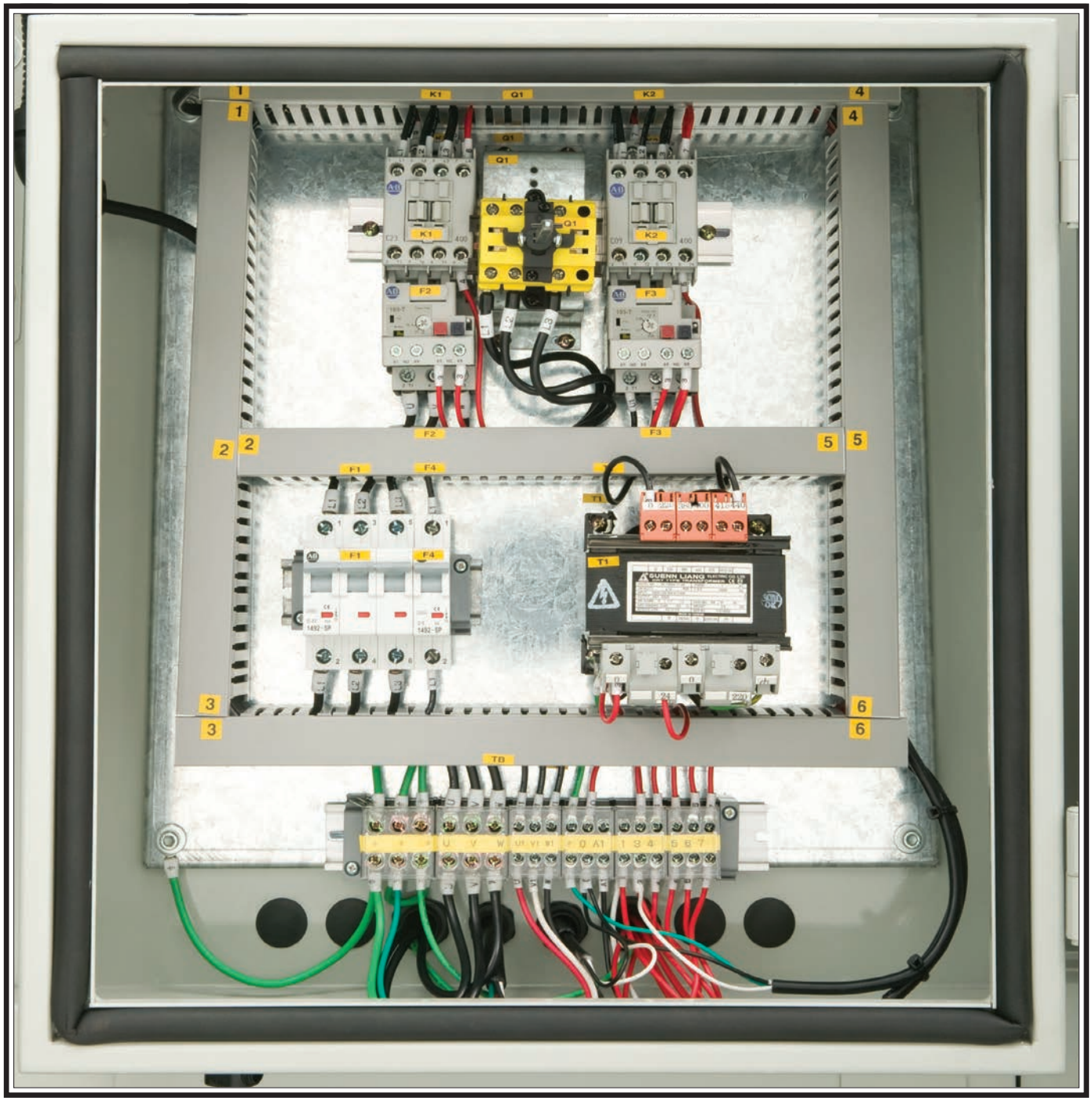

Figure 139. Electrical box.

Spindle Motor

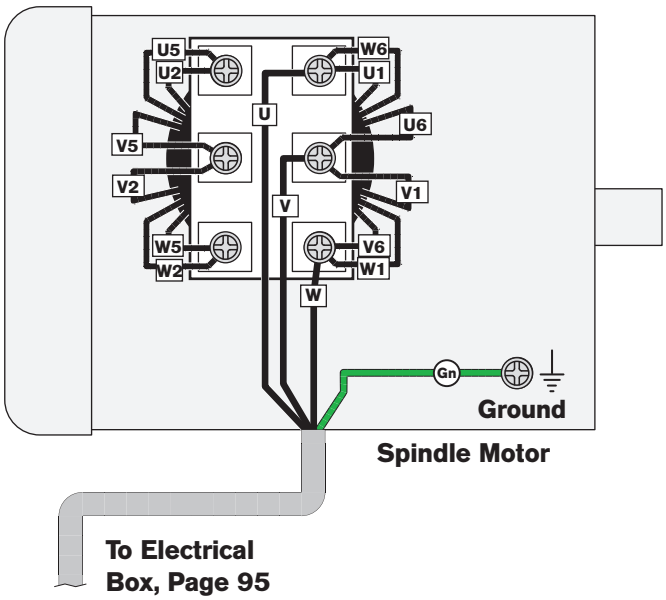

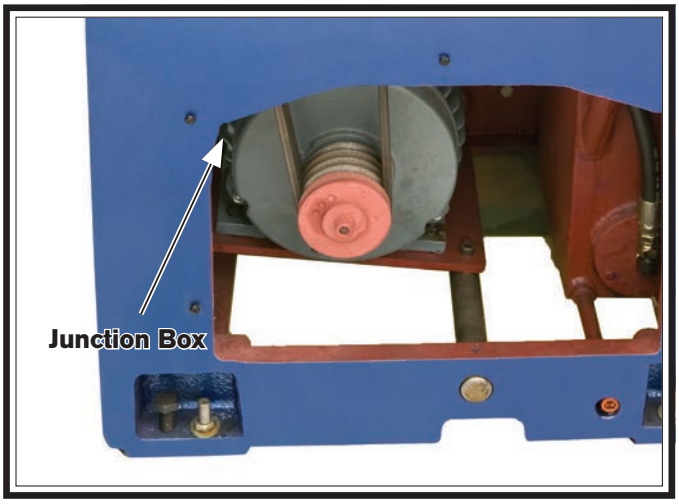

Figure 140. Spindle motor location.

Coolant Pump

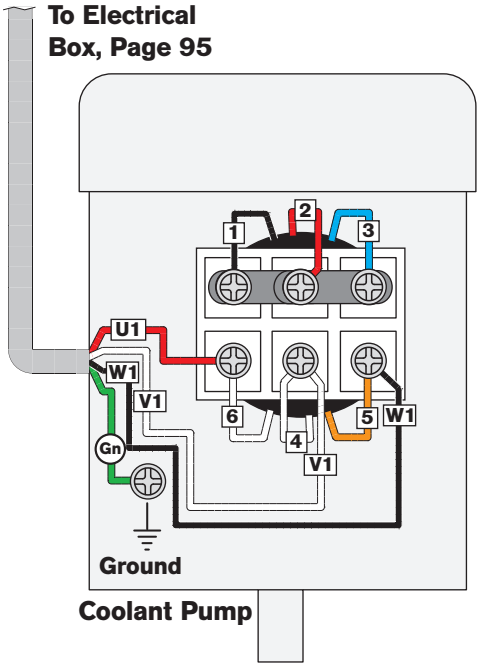

Figure 141. Coolant pump location.

Control Panel

Figure 142. Control panel wiring.

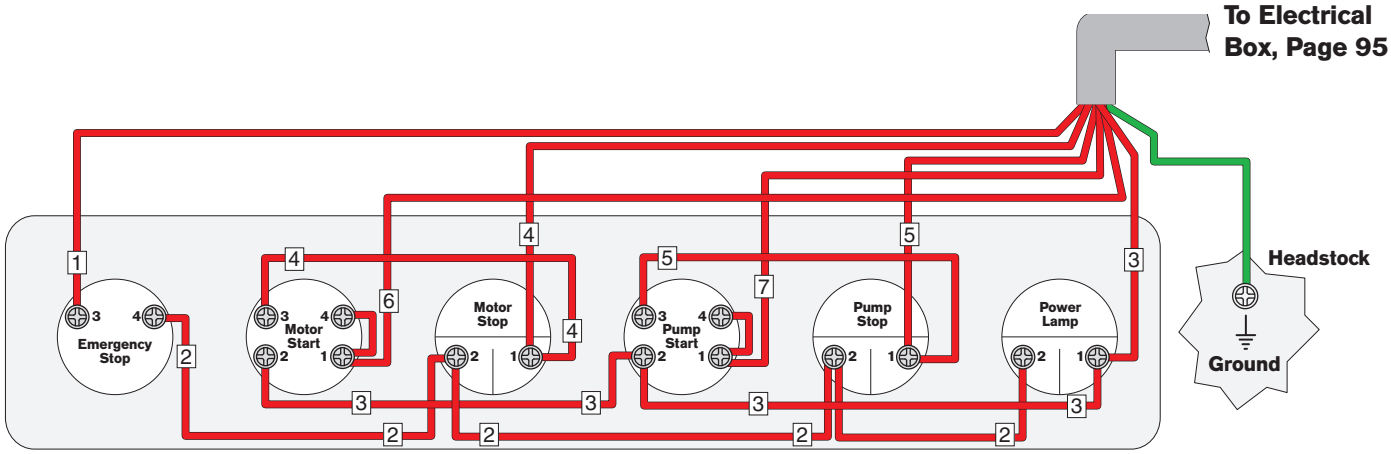

Additional Components

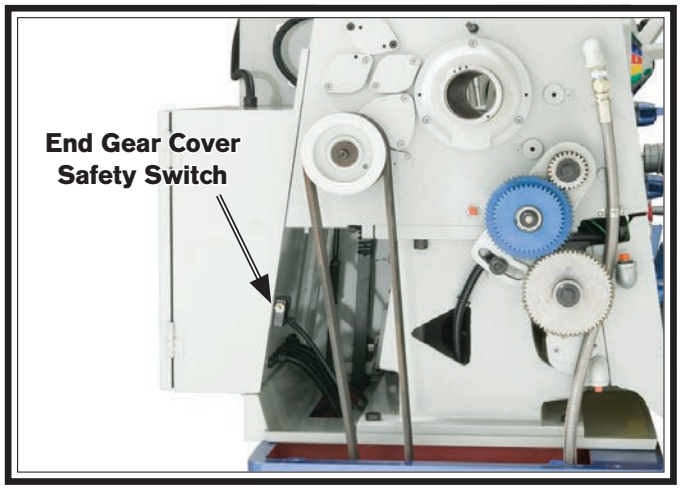

Figure 143. End Gear Cover Safety switch location.

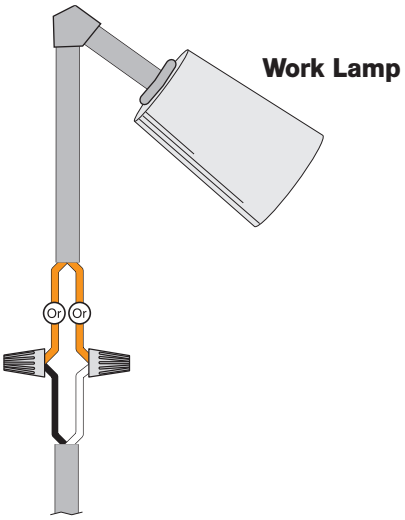

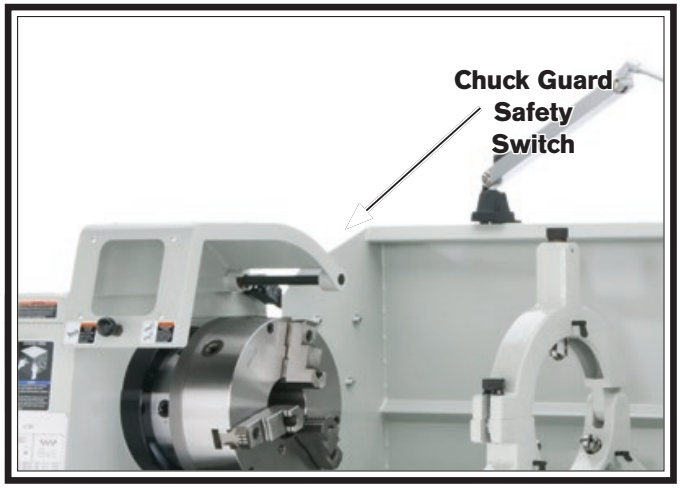

Figure 144. Chuck Guard Safety switch location.

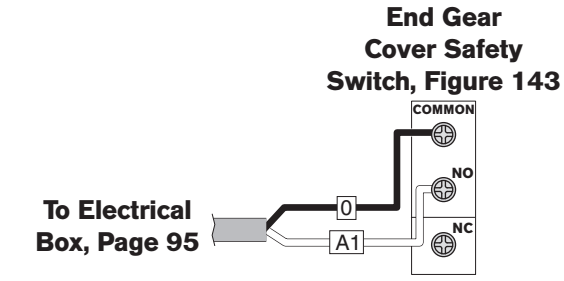

Power Supply Connection

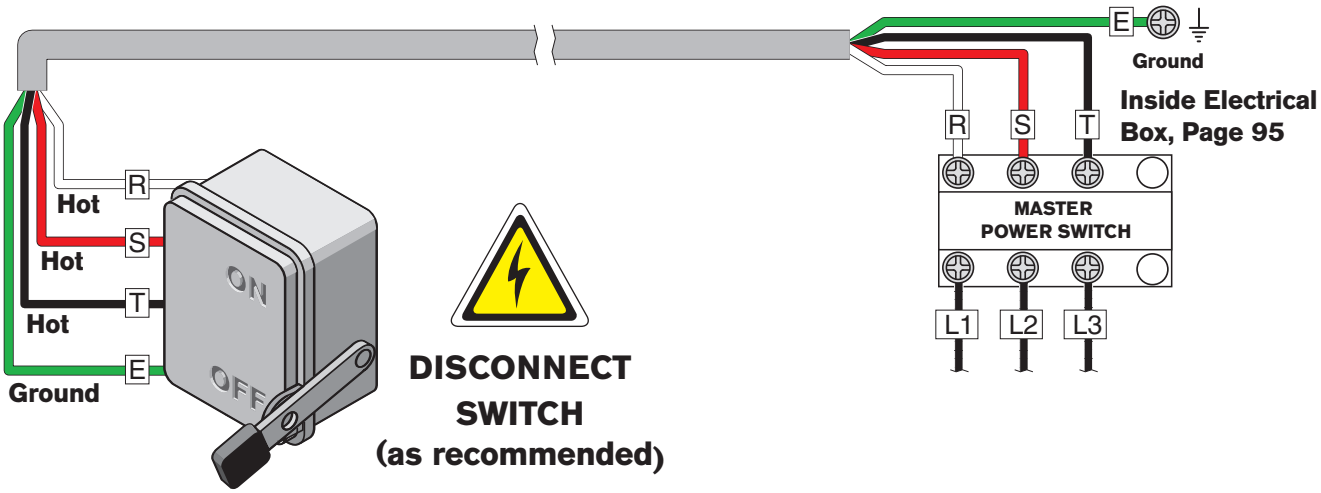

Headstock Housing 1

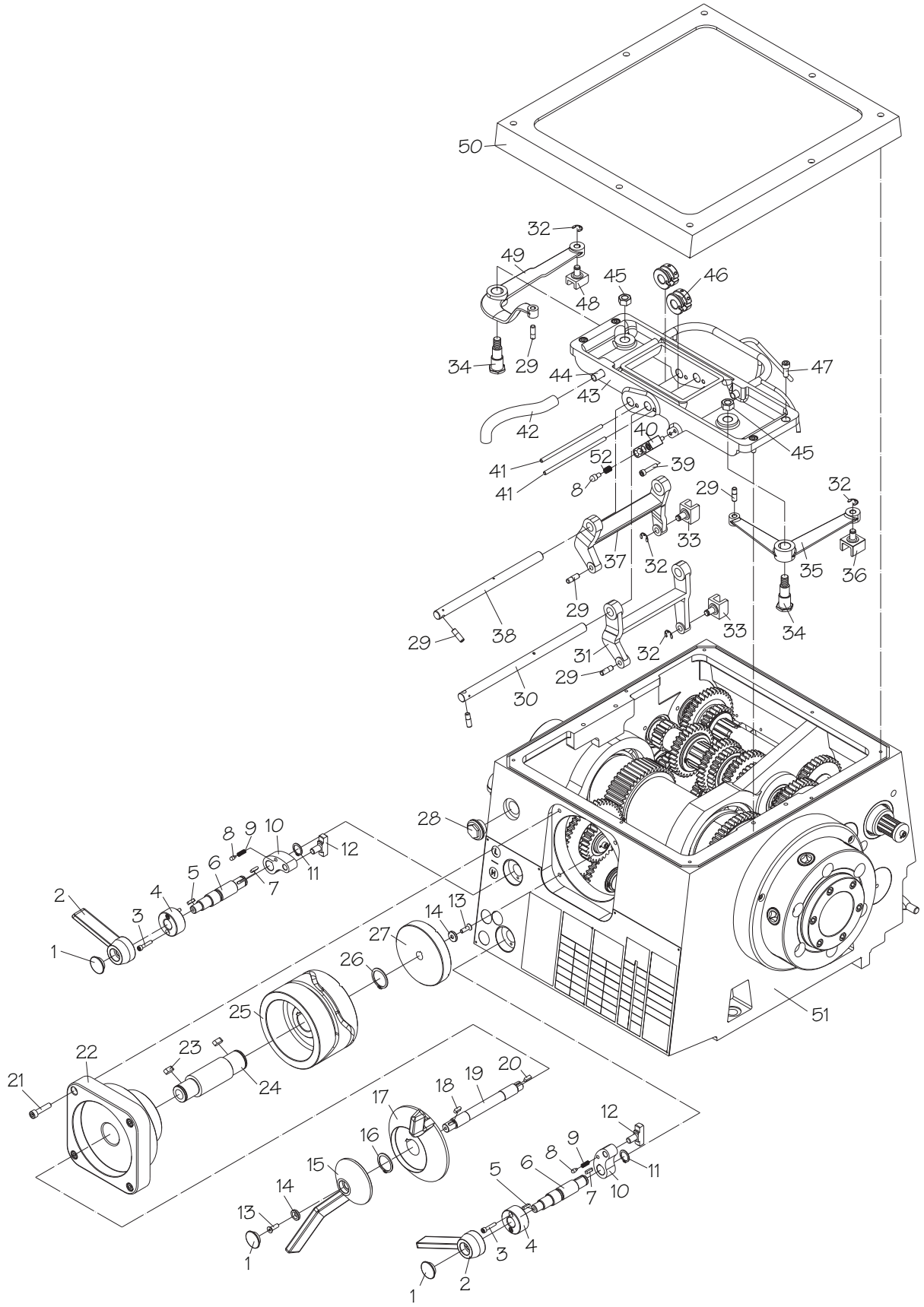

Headstock Housing 2

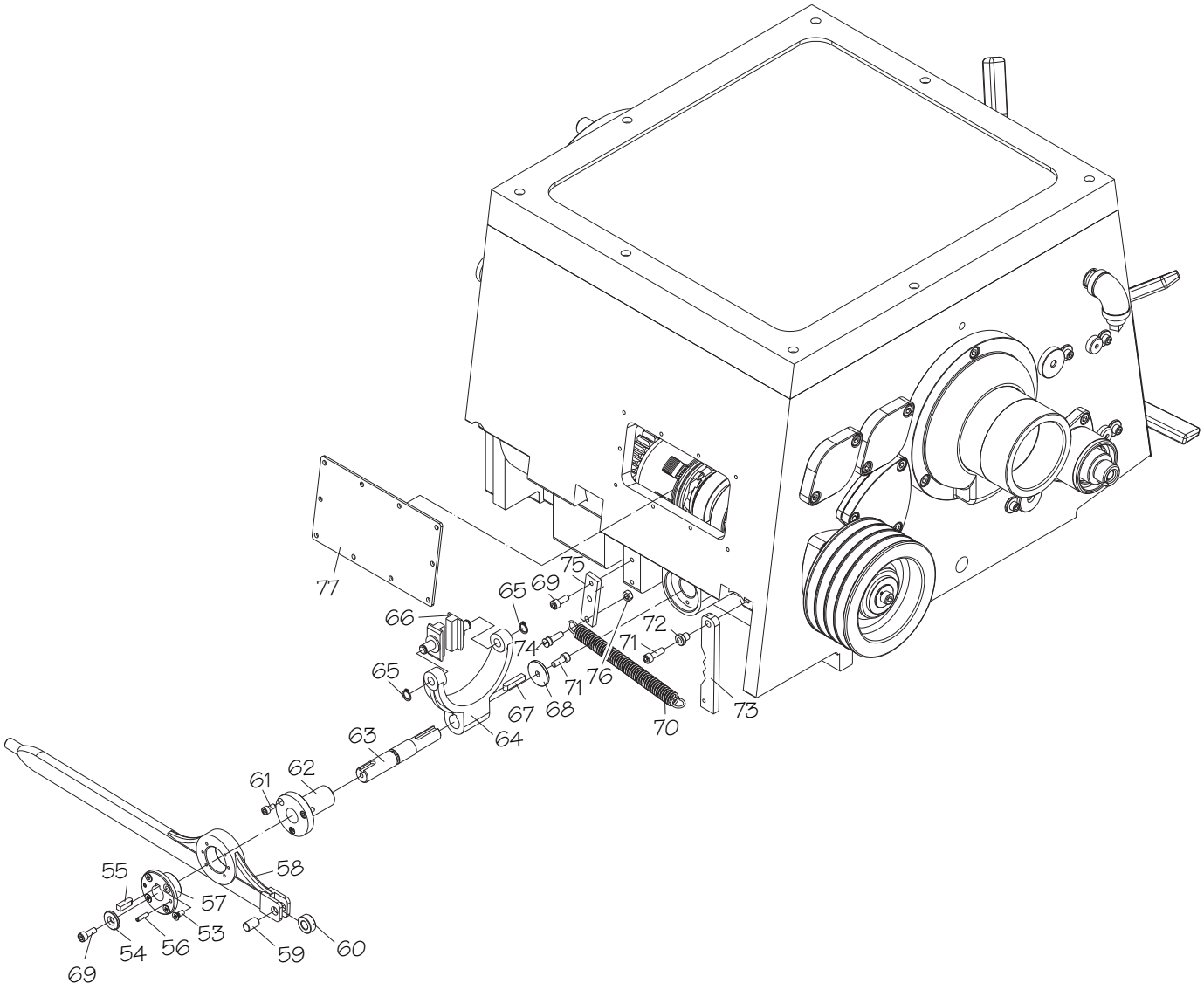

Headstock Housing Parts List

REF	PART #	DESCRIPTION
1	PSB1046PF0001	SHIFT LEVER END CAP
2	PSB1046PF0002	SHIFT LEVER
3	PCAP38M	CAP SCREW M5-.8 X 25
4	PSB1046PF0004	SHAFT COLLAR
5	PK47M	KEY 4 X 4 X 15
6	PSB1046PF0006	SHIFT LEVER SHAFT
7	PK48M	KEY 4 X 4 X 20
8	PSB1046PF0008	DETENT PIN
9	PSB1046PF0009	COMPRESSION SPRING
10	PSB1046PF0010	SHIFT KNUCKLE
11	PR07M	EXT RETAINING RING 18MM
12	PSB1046PF0012	SHIFT TAB
13	PS107M	PHLP HD SCR M6-1 X 20
14	PSB1046PF0014	LEVER BEVELED WASHER
15	PSB1046PF0015	SPEED SELECTION LEVER
16	PR15M	EXT RETAINING RING 30MM
17	PSB1046PF0017	RANGE SELECTION LEVER
18	PK19M	KEY 5 X 5 X 14
19	PSB1046PF0019	SPEED SLECTOR SHAFT
20	PK19M	KEY 5 X 5 X 14
21	PCAP40M	CAP SCREW M8-1.25 X 35
22	PSB1046PF0022	LEVER HOUSING
23	PK82M	KEY 7 X 7 X 18
24	PSB1046PF0024	RANGE SELECTOR SHAFT
25	PSB1046PF0025	SELECTOR SLEEVE
26	PR12M	EXT RETAINING RING 35MM
27	PSB1046PF0027	SELECTOR DISC
28	PSB1046PF0028	SIGHT GLASS
29	PSB1046PF0029	STEP PIN
30	PSB1046PF0030	UPPER PIVOT ROD
31	PSB1046PF0031	UPPER SHIFT YOKE
32	PEC03M	E-CLIP 10MM
33	PSB1046PF0033	SHIFT FORK
34	PSB1046PF0034	SHIFT ARM PIVOT BOLT
35	PSB1046PF0035	SHIFT ARM
36	PSB1046PF0036	SHIFT FORK
37	PSB1046PF0037	LOWER SHIFT YOKE
38	PSB1046PF0038	LOWER PIVOT ROD
39	PCAP07M	CAP SCREW M6-1 X 30
40	PSB1046PF0040	DETENT BRACKET
41	PSB1046PF0041	SHIFT LIMIT PIN
42	PSB1046PF0042	OIL TUBE
43	PSB1046PF0043	SHIFT YOKE FRAME
44	PSB1046PF0044	OIL FITTING
45	PSB1046PF0045	PIVOT ARM BOLT HEX NUT
46	PSB1046PF0046	PIVOT ROD LOCK COLLARS
47	PCAP14M	CAP SCREW M8-1.25 X 20
48	PSB1046PF0048	SHIFT FORK
49	PSB1046PF0049	OUTBOARD SIDE SHIFT LEVER
50	PSB1046PF0050	HEADSTOCK TOP COVER
51	PSB1046PF0051	HEADSTOCK CASTING (SB1046PF-48PF
51	PSB1056F0051	HEADSTOCK CASTING (SB1056F-58F)
52	PSB1046PF0052	COMPRESSION SPRING
53	PFH05M	FLAT HD SCR M5-.8 X 12
54	PW03M	FLAT WASHER 6MM
55	PK07M	KEY 6 X 6 X 20
56	PRP76M	ROLL PIN 4 X 16
57	PSB1046PF0057	FLANGE BUSHING
58	PSB1046PF0058	LEVER
59	PSB1046PF0059	PIVOT PIN
60	PSB1046PF0060	LEVER ROLLER
61	PCAP50M	CAP SCREW M5-.8 X 10
62	PSB1046PF0062	INNER LEVER SLEEVE
63	PSB1046PF0063	LEVER SHAFT
64	PSB1046PF0064	SHIFT FORK
65	PR01M	EXT RETAINING RING 10MM
66	PSB1046PF0066	SHIFT TAB
67	PK42M	KEY 6 X 6 X 30
68	PSB1046PF0068	RETAINING FLAT WASHER 6MM
69	PCAP01M	CAP SCREW M6-1 X 16
70	PSB1046PF0070	EXTENSION SPRING
71	PCAP02M	CAP SCREW M6-1 X 20
72	PSB1046PF0072	BUSHING
73	PSB1046PF0073	DETENT PLATE
74	PSB1046PF0074	SPRING HANGER
75	PSB1046PF0075	SPRING PLATE
76	PN01M	HEX NUT M6-1
77	PSB1046PF0077	HEADSTOCK REAR COVER

Headstock Gears 1

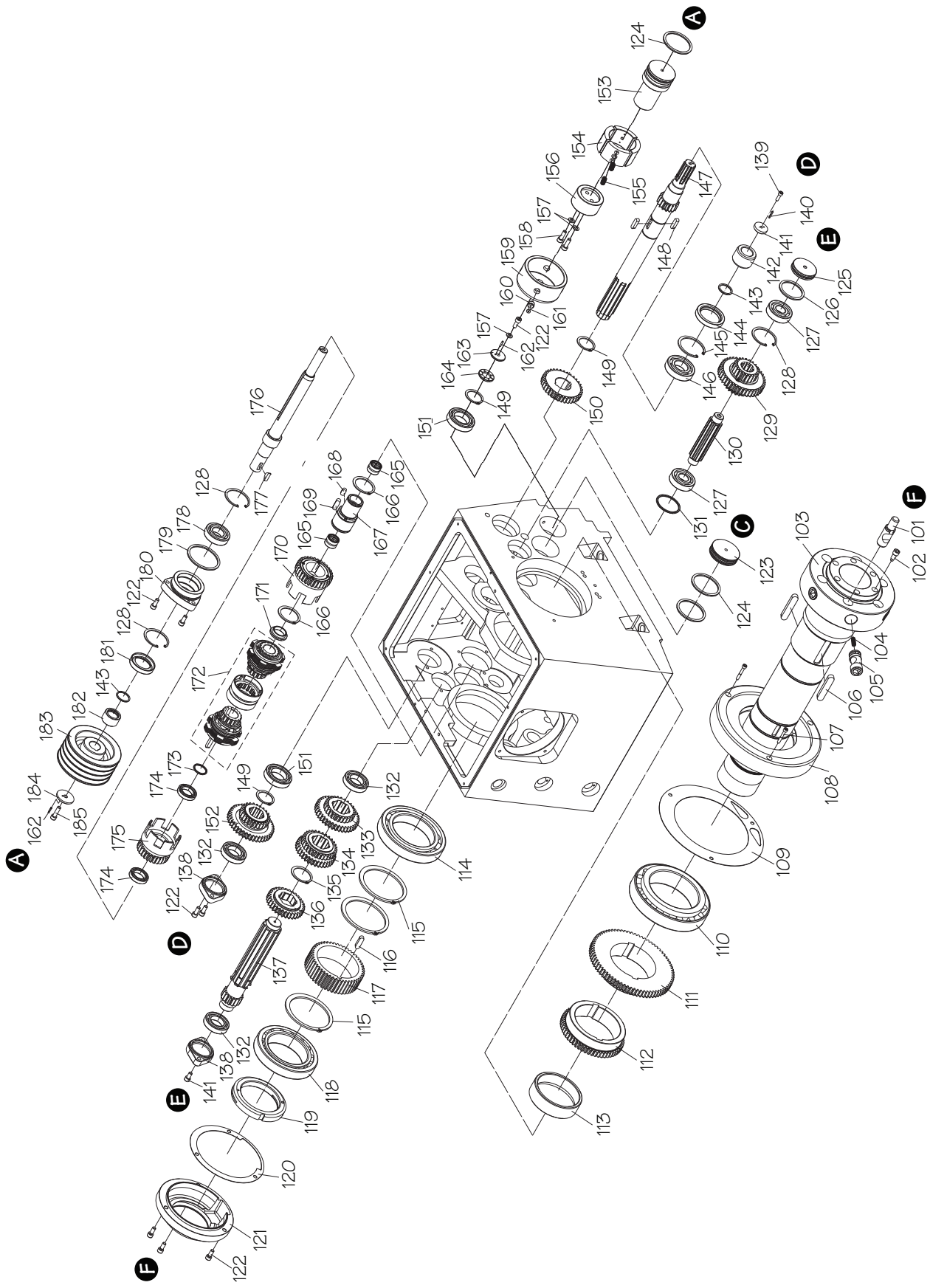

Headstock Gears 2

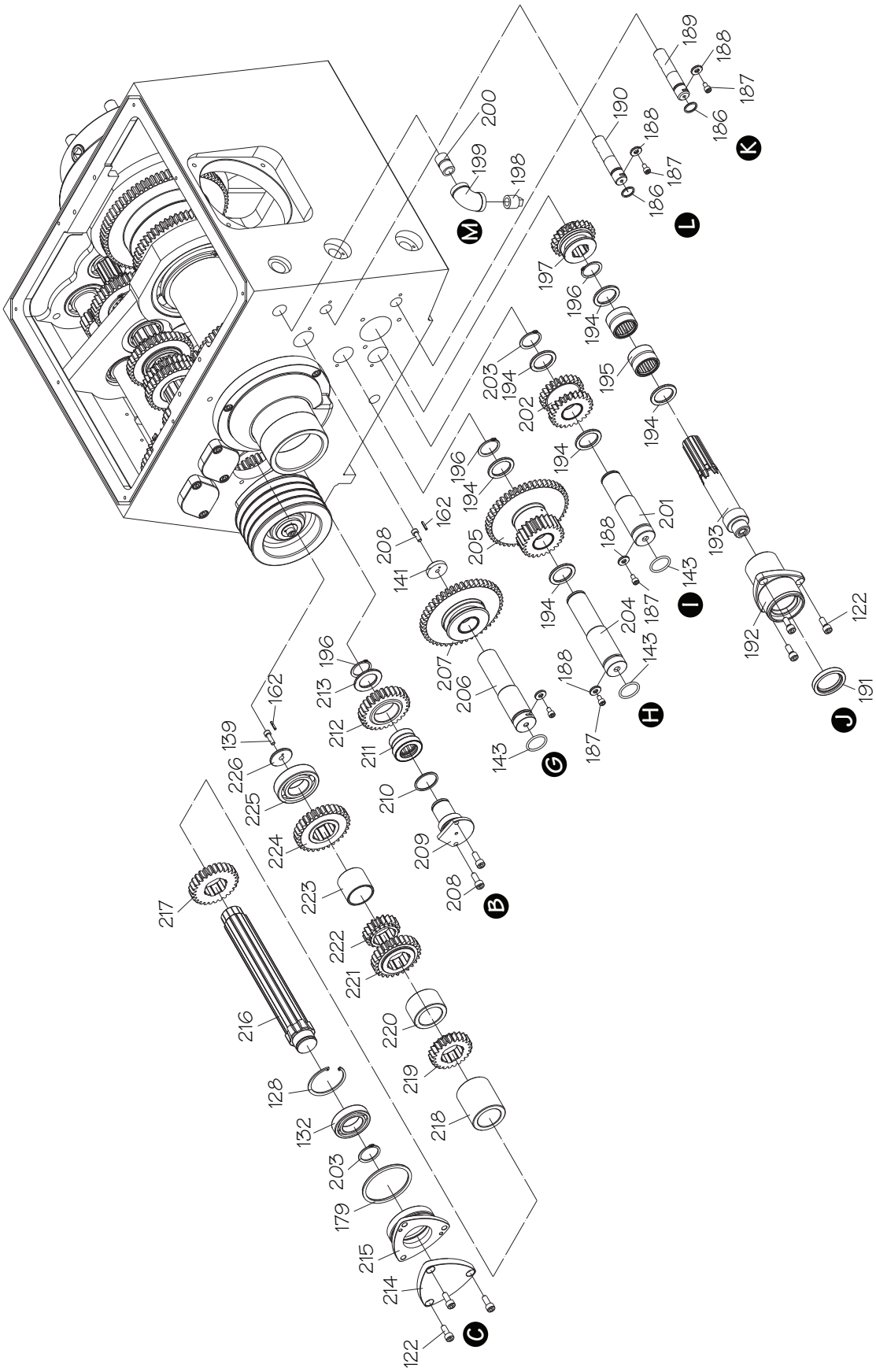

Headstock Gears Parts List

REF	PART #	DESCRIPTION
101	PSB1046PF0101	CAMLOCK STUD
102	PSB1046PF0102	SPINDLE BOLT
103	PSB1046PF0103	SPINDLE
104	PSB1046PF0104	COMPRESSION SPRING
105	PSB1046PF0105	CAMLOCK
106	PSB1046PF0106	KEY 15 X 10 X 78
107	PCAP29M	CAP SCREW M6-1 X 40
108	PSB1046PF0108	FRONT BEARING COVER
109	PSB1046PF0109	INBOARD SPINDLE GASKET
110	P32026	TAPERED BEARING 32026
111	PSB1046PF0111	GEAR 75T
112	PSB1046PF0112	GEAR 56T
113	PSB1046PF0113	SPINDLE SPACER
114	P6022-OPEN	BALL BEARING 6022 OPEN
115	PR90M	EXT RETANING RING 110MM
116	PK114M	KEY 10 X 8 X 35
117	PSB1046PF0117	GEAR 48T
118	P32021	TAPER BEARING 32021
119	PSB1046PF0119	SPANNER NUT
120	PSB1046PF0120	OUTBOARD SPINDLE GASKET
121	PSB1046PF0121	REAR BEARING COVER
122	PCAP14M	CAP SCREW M8-1.25 X 20
123	PSB1046PF0123	PLUG
124	PORG065	O-RING 64.4 X 3.1 G65
125	PSB1046PF0125	PLUG
126	PORG055	O-RING 54.4 X 3.1 G55
127	P6305-OPEN	BALL BEARING 6305 OPEN
128	PR38M	INT RETAINING RING 62MM
129	PSB1046PF0129	COMBO GEAR 21T/40T
130	PSB1046PF0130	SPLINED SHAFT
131	PSB1046PF0131	COLLAR
132	P6007-OPEN	BALL BEARING 6007 OPEN
133	PSB1046PF0133	COMBO GEAR 26T/38T
134	PSB1046PF0134	COMBO GEAR 30T/34T
135	PR32M	EXT RETAINING RING 48MM
136	PSB1046PF0136	GEAR 32T
137	PSB1046PF0137	GEAR SHAFT 16T
138	PSB1046PF0138	SPLINED SHAFT COVER
139	PCAP02M	CAP SCREW M6-1 X 20
140	PRP02M	ROLL PIN 3 X 16
141	PSB1046PF0141	SHAFT COVER PLATE
142	PSB1046PF0142	SPACER
143	PORP030	O-RING 29.7 X 3.5 P30
144	PSB1046PF0144	OIL SEAL 507212
145	PR64M	INT RETAINING RING 72MM
146	P6207-RS	BALL BEARING 6207-RS
147	PSB1046PF0147	SPLINED GEAR SHAFT 16T
148	PK136M	KEY 8 X 8 X 30
149	PR68M	EXT RETAINING RING 40MM
150	PSB1046PF0150	GEAR 35T

REF	PART #	DESCRIPTION
151	P6008-OPEN	BALL BEARING 6008 OPEN
152	PSB1046PF0152	COMBO GEAR 25T/40T
153	PSB1046PF0153	BRAKE DRUM SHAFT
154	PSB1046PF0154	BRAKE SHOE
155	PSB1046PF0155	COMPRESSION SPRING
156	PSB1046PF0156	BRAKE DRUM
157	PW01M	FLAT WASHER 8MM
158	PCAP31M	CAP SCREW M8-1.25 X 25
159	PSB1046PF0159	CENTRIFUGAL BRAKE CYLINDER
160	PSB1046PF0160	BRAKE SHOE BUSHING
161	PS11M	PHLP HD SCR M6-1 X 16
162	PSB1046PF0162	RETAINER PIN
163	PSB1046PF0163	BRAKE ASSEMBLY FLAT WASHER
164	PSB1046PF0164	BRAKE ASSEMBLY COLLAR
165	PSB1046PF0165	NEEDLE ROLLER BEARING NK22/20
166	PR43M	EXT RETAINING RING 50MM
167	PSB1046PF0167	SHAFT
168	PSB1046PF0168	KEY 10 X 7 X 18
169	PSB1046PF0169	KEY 10 X 7 X 30
170	PSB1046PF0170	CLUTCH/GEAR ASSEMBLY 31T
171	PSB1046PF0171	OUTBOARD COPPER COLLAR
172	PSB1046PF0172	CLUTCH ASSEMBLY
173	PSB1046PF0173	INBOARD COPPER COLLAR
174	P6906-OPEN	BALL BEARING 6906-OPEN
175	PSB1046PF0175	CLUTCH/GEAR ASSY 27T
176	PSB1046PF0176	CLUTCH ASSEMBLY SHAFT
177	PSB1046PF0177	WOODRUFF KEY 25 X 7
178	P6206-OPEN	BALL BEARING 6206 OPEN
179	PORG075	O-RING 74.4 X 3.1 G75
180	PSB1046PF0180	BEARING SEAT
181	PSB1046PF0181	OIL SEAL 406212
182	PSB1046PF0182	PULLEY SPACER
183	PSB1046PF0183	SPINDLE PULLEY
184	PSB1046PF0184	PULLEY FLAT WASHER
185	PCAP13M	CAP SCREW M8-1.25 X 30
186	PORP016	O-RING 15.8 X 2.4 P16
187	PCAP26M	CAP SCREW M6-1 X 12
188	PSB1046PF0188	SHAFT RETAINING FLAT WASHER
189	PSB1046PF0189	CHANGE GEAR SHAFT
190	PSB1046PF0190	CHANGE GEAR SHAFT
191	PSB1046PF0191	OIL SEAL 385508
192	PSB1046PF0192	SHAFT HOUSING
193	PSB1046PF0193	SPINED SHAFT
194	PSB1046PF0194	SPLINED SHAFT SPACER
195	PSB1046PF0195	NEEDLE BEARING 32 X 30
196	PR15M	EXT RETAINING RING 30MM
197	PSB1046PF0197	GEAR 24T
198	PSB1046PF0198	OIL DRAIN PLUG 1/2" NPT
199	PSB1046PF0199	ELBOW 3/4 X 1/2" NPT
200	PSB1046PF0200	COUPLER 3/4" NPT

Headstock Gears Parts List

REF	PART #	DESCRIPTION
201	PSB1046PF0201	CHANGE GEAR SHAFT
202	PSB1046PF0202	GEAR 24T
203	PR37M	EXT RETAINING RING 32MM
204	PSB1046PF0204	CHANGE GEAR SHAFT
205	PSB1046PF0205	COMBO GEAR 24T/48T
206	PSB1046PF0206	CHANGE GEAR SHAFT
207	PSB1046PF0207	COMBO GEAR 48T/24T
208	PCAP01M	CAP SCREW M6-1 X 16
209	PSB1046PF0209	CHANGE GEAR SHAFT
210	PORG035	O-RING 3.1 X 34.4 G35
211	PSB1046PF0211	NEEDLE ROLLER BEARING NAX3030
212	PSB1046PF0212	GEAR 28T
213	PSB1046PF0213	CHANGE SPACER

REF	PART #	DESCRIPTION
214	PSB1046PF0214	SHAFT COVER PLATE
215	PSB1046PF0215	FLANGED BEARING
216	PSB1046PF0216	SPLINED SHAFT
217	PSB1046PF0217	GEAR 27T
218	PSB1046PF0218	SPACER
219	PSB1046PF0219	GEAR 23T
220	PSB1046PF0220	SPACER
221	PSB1046PF0221	GEAR 27T
222	PSB1046PF0222	GEAR 19T
223	PSB1046PF0223	SPACER
224	PSB1046PF0224	GEAR 31T
225	P6207-OPEN	BALL BEARING 6207-OPEN
226	PSB1046PF0226	BEARING RETAINER

Gearbox 1

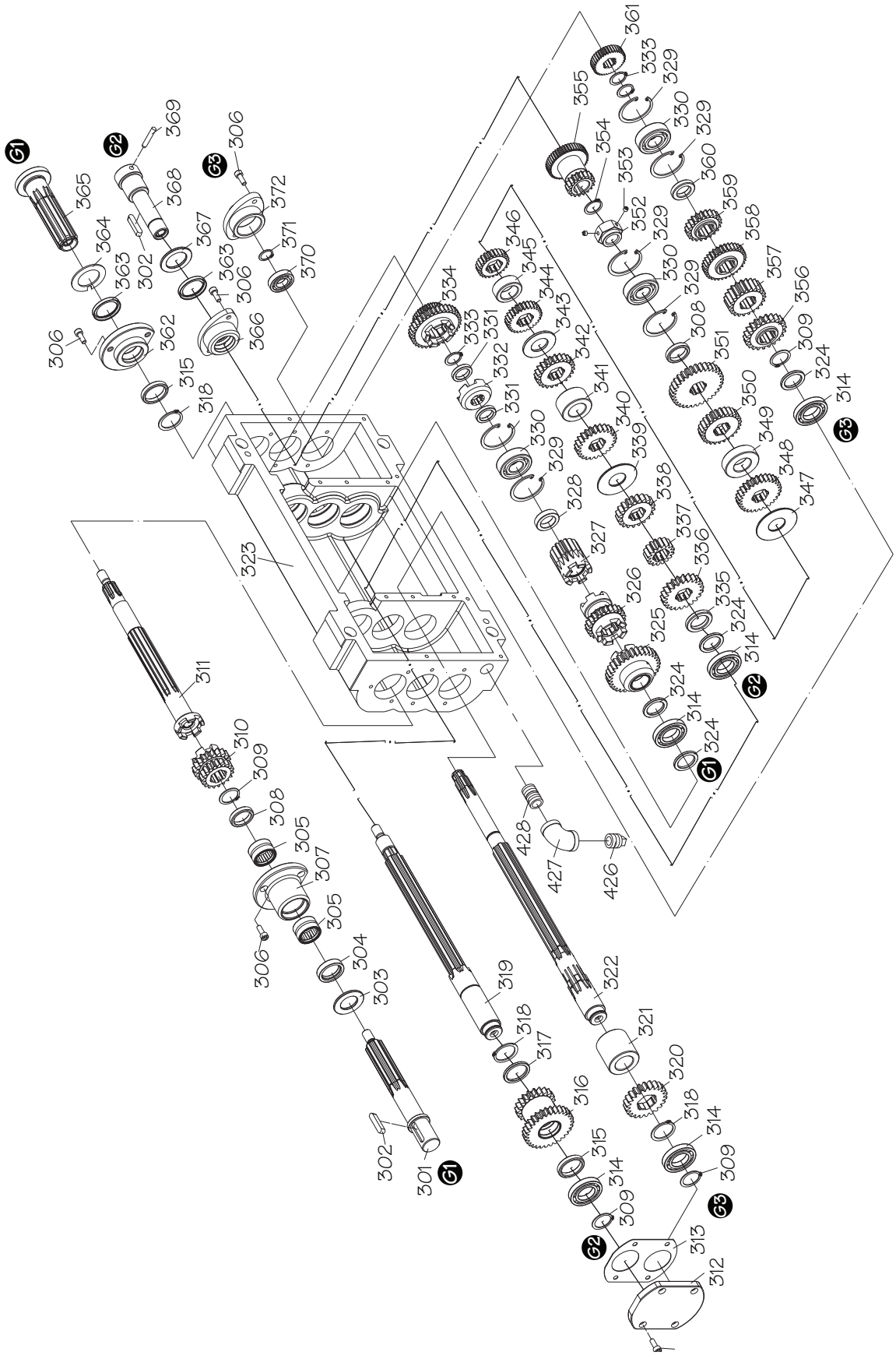
G1
G2
G3
301
302
303
304
305
306
307
308
309
310
311
312
313
314
315
316
317
318
319
320
321
322
323
324
325
326
327
328
329
330
331
332
333
334
335
336
337
338
339
340
341
342
343
344
345
346
347
348
349
350
351
352
353
354
355
356
357
358
359
360
361
362
363
364
365
366
367
368
369
370
371
372
426
427
428

Gearbox 2

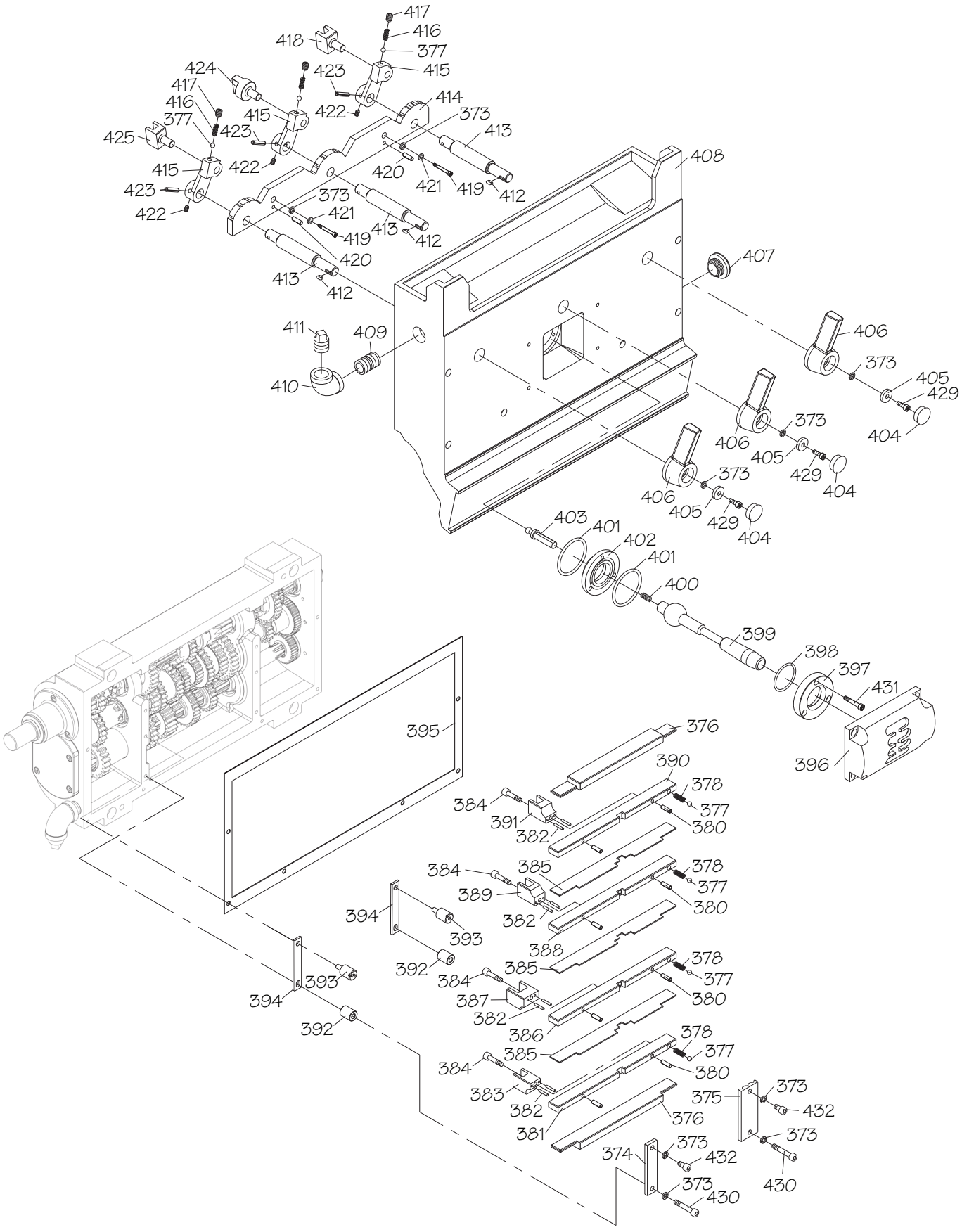
417
416
418
377
415
424
423
417
416
415
422
414
373
377
423
413
425
422
415
420
421
419
412
408
423
373
422
421
413
419
412
420
413
412
407
411
409
406
410
373
405
429
404
373
406
405
429
404
373
406
405
429
404
403
401
402
401
400
399
398
397
431
395
396
376
390
378
384
377
391
380
382
384
385
378
377
389
380
394
382
393
388
392
385
378
384
377
393
387
380
394
382
392
386
378
385
377
384
380
383
373
375
432
382
376
381
373
374
432
373
430
430

Gearbox Parts List

REF	PART #	DESCRIPTION
301	PSB1046PF0301	SPLINED SHAFT
302	PK109M	KEY 7 X 7 X 35
303	PSB1046PF0303	SHAFT SPACER
304	PSB1046PF0304	OIL SEAL 253708
305	PSB1046PF0305	NEEDLE BEARING
306	PCAP01M	CAP SCREW M6-1 X 16
307	PSB1046PF0307	SPLINED SHAFT SEAT
308	PSB1046PF0308	SPACER
309	PR11M	EXT RETAINING RING 25MM
310	PSB1046PF0310	GEAR 19T/19T
311	PSB1046PF0311	SPLINED SHAFT
312	PSB1046PF0312	SHAFT COVER
313	PSB1046PF0313	COVER GASKET
314	P6005-OPEN	BALL BEARING 6005 OPEN
315	PSB1046PF0315	SPACER
316	PSB1046PF0316	GEAR 20T/30T
317	PSB1046PF0317	SPACER
318	PR15M	EXT RETAINING RING 30MM
319	PSB1046PF0319	SPLINED SHAFT
320	PSB1046PF0320	GEAR 22T
321	PSB1046PF0321	SHAFT SPACER
322	PSB1046PF0322	SPLINED SHAFT
323	PSB1046PF0323	GEARBOX CASTING
324	PSB1046PF0324	SPACER
325	PSB1046PF0325	GEAR 32T
326	PSB1046PF0326	GEAR 23T
327	PSB1046PF0327	GEAR 16T
328	PSB1046PF0328	SPACER
329	PR25M	INT RETAINING RING 47MM
330	P6204-OPEN	BALL BEARING 6204-OPEN
331	PSB1046PF0331	SPACER
332	PSB1046PF0332	SHAFT CLUTCH
333	PR09M	EXT RETAINING RING 20MM
334	PSB1046PF0334	COMBO GEAR 35T/35T
335	PSB1046PF0335	SPACER
336	PSB1046PF0336	GEAR 22T
337	PSB1046PF0337	GEAR 16T
338	PSB1046PF0338	GEAR 20T
339	PSB1046PF0339	SPACER
340	PSB1046PF0340	GEAR 24T
341	PSB1046PF0341	SPACER
342	PSB1046PF0342	GEAR 23T
343	PSB1046PF0343	SPACER
344	PSB1046PF0344	GEAR 27T
345	PSB1046PF0345	SPACER
346	PSB1046PF0346	GEAR 24T
347	PSB1046PF0347	SPACER
348	PSB1046PF0348	GEAR 28T
349	PSB1046PF0349	SPACER
350	PSB1046PF0350	GEAR 26T
351	PSB1046PF0351	GEAR 32T
352	PSB1046PF0352	SHAFT NUT
353	PSS02M	SET SCREW M6-1 X 6
354	PR10M	EXT RETAINING RING 22MM
355	PSB1046PF0355	COMBO GEAR 45T/18T
356	PSB1046PF0356	GEAR 22T
357	PSB1046PF0357	GEAR 22T
358	PSB1046PF0358	GEAR 33T
359	PSB1046PF0359	GEAR 22T
360	PSB1046PF0360	SPACER
361	PSB1046PF0361	GEAR 36T
362	PSB1046PF0362	SHAFT SEAT
363	PSB1046PF0363	OIL SEAL 304005
364	PSB1046PF0364	SPACER
365	PSB1046PF0365	SPLINED SHAFT
366	PSB1046PF0366	SHAFT SEAT
367	PSB1046PF0367	SPACER
368	PSB1046PF0368	SHAFT
369	PSB1046PF0369	PIN 6 X 36
370	P6003-OPEN	BALL BEARING 6003 OPEN
371	PR18M	EXT RETAINING RING 17MM
372	PSB1046PF0372	BEARING SEAT
373	PLW03M	LOCK WASHER 6MM
374	PSB1046PF0374	PLATE
375	PSB1046PF0375	REVERSE STOP PLATE
376	PSB1046PF0376	UPPER/LOWER PLATE
377	PSTB001	STEEL BALL 1/4
378	PSB1046PF0378	COMPRESSION SPRING
380	PRP24M	ROLL PIN 5 X 16
381	PSB1046PF0381	BOTTOM SHIFT FORK SUPPORT
382	PRP24M	ROLL PIN 5 X 16
383	PSB1046PF0383	BOTTOM SHIFT FORK
384	PCAP15M	CAP SCREW M5-.8 X 20
385	PSB1046PF0385	PARTITION
386	PSB1046PF0386	LOWER-MID SHIFT FORK SUPPORT
387	PSB1046PF0387	LOWER-MID SHIFT FORK
388	PSB1046PF0388	UPPER-MID SHIFT FORK SUPPORT
389	PSB1046PF0389	UPPER-MID SHIFT FORK
390	PSB1046PF0390	TOP SHIFT FORK SUPPORT
391	PSB1046PF0391	TOP SHIFT FORK
392	PSB1046PF0392	SPACER
393	PSB1046PF0393	PARTITION NUT
394	PSB1046PF0394	PARTITION PLATE
395	PSB1046PF0395	GEARBOX GASKET
396	PSB1046PF0396	SHIFT GATE
397	PSB1046PF0397	SELECTOR LEVER RETAINER
398	PORG035	O-RING 3.1 X 34.4 G35
399	PSB1046PF0399	SELECTOR LEVER
400	PSB1046PF0400	COMPRESSION SPRING
401	PORG040	O-RING 39.4 X 3.1 G40
402	PSB1046PF0402	SELECTOR LEVER BASE

Gearbox Parts List

REF	PART #	DESCRIPTION
403	PSB1046PF0403	SELECTOR LEVER PIN
404	PSB1046PF0404	LEVER CAP
405	PSB1046PF0405	LEVER RETAINING FLAT WASHER
406	PSB1046PF0406	SHIFT LEVER
407	PSB1046PF0407	SIGHT GLASS
408	PSB1046PF0408	GEARBOX COVER (SB1046PF-48PF)
408	PSB1056F0408	GEARBOX COVER (SB1056F-58F)
409	PSB1046PF0409	COUPLER 3/4" NPT
410	PSB1046PF0410	ELBOW 3/4" NPT
411	PSB1046PF0411	OIL FILL PLUG 3/4" NPT
412	PK05M	KEY 4 X 4 X 10
413	PSB1046PF0413	SELECTOR SHAFT
414	PSB1046PF0414	SELECTOR BAR
415	PSB1046PF0415	SHIFT KNUCKLE
416	PSB1046PF0416	COMPRESSION SPRING
417	PSS20M	SET SCREW M8-1.25 X 8

REF	PART #	DESCRIPTION
418	PSB1046PF0418	SHIFT FORK
419	PCAP02M	CAP SCREW M6-1 X 20
420	PRP24M	ROLL PIN 5 X 16
421	PW03M	FLAT WASHER 6MM
422	PSS02M	SET SCREW M6-1 X 6
423	PRP04M	ROLL PIN 4 X 24
424	PSB1046PF0424	SHIFT TAB
425	PSB1046PF0425	SHIFT FORK
426	PSB1046PF0426	SQUARE HEAD PLUG 1/2" NPT
427	PSB1046PF0427	PIPE ELBOW 1/2" NPT
428	PSB1046PF0428	COUPLER 1/2" NPT
429	PCAP26M	CAP SCREW M6-1 X 12
430	PCAP29M	CAP SCREW M6-1 X 40
431	PCAP38M	CAP SCREW M5-.8 X 25
432	PCAP01M	CAP SCREW M6-1 X 16

Apron 1

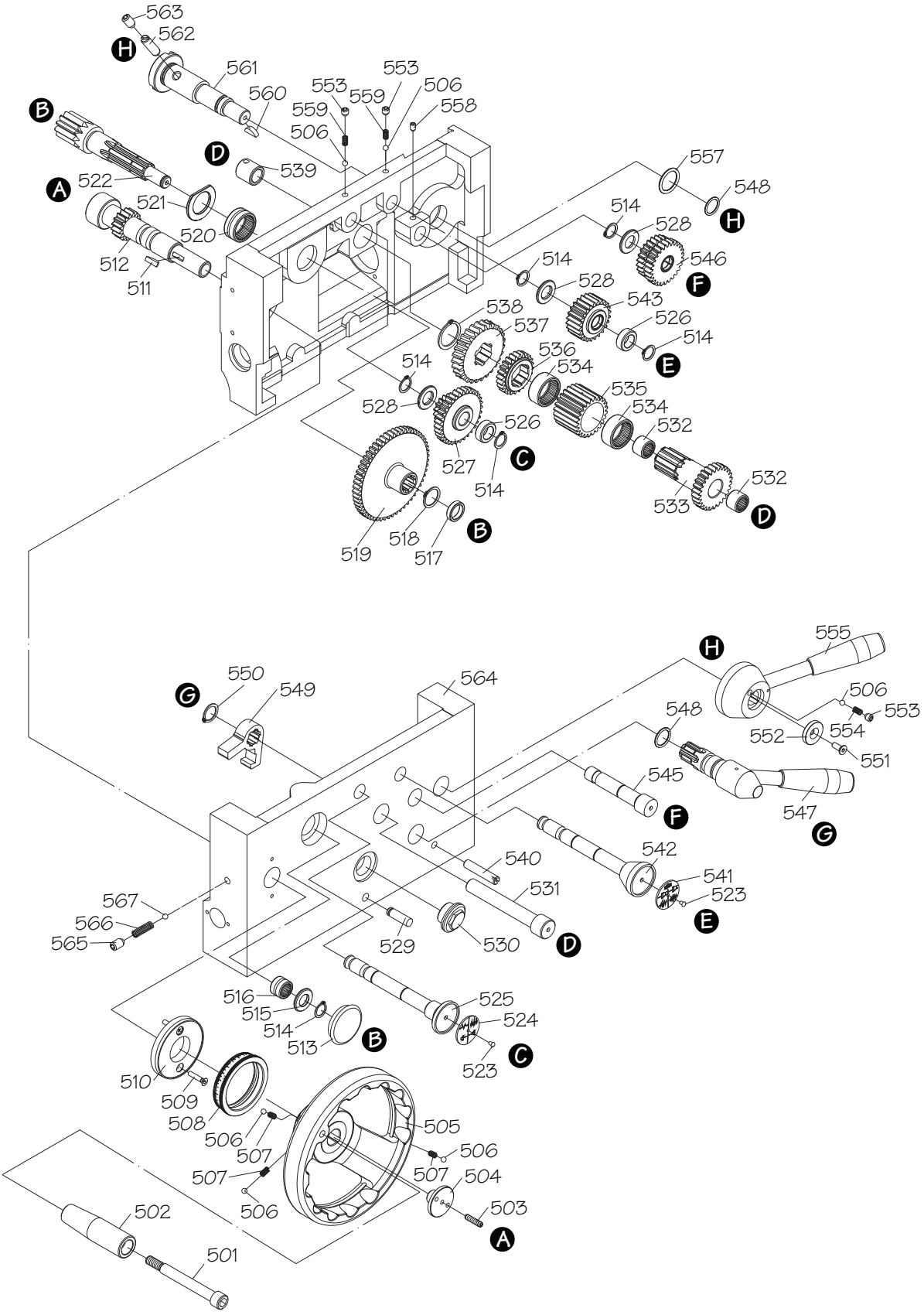
563
562
H
561
560
553
553
559
559
506
506
558
B
D
539
A
522
521
520
512
511
557
548
H
514
528
546
F
514
528
543
526
514
E
538
537
536
534
535
534
532
514
528
526
527
C
514
532
533
D
519
518
517
B
555
H
550
549
G
564
506
553
548
552
554
551
545
F
547
G
542
540
541
531
523
E
567
566
565
529
530
D
516
515
514
513
B
525
524
523
C
510
509
508
506
507
505
506
507
507
504
506
503
A
502
501

Apron 2

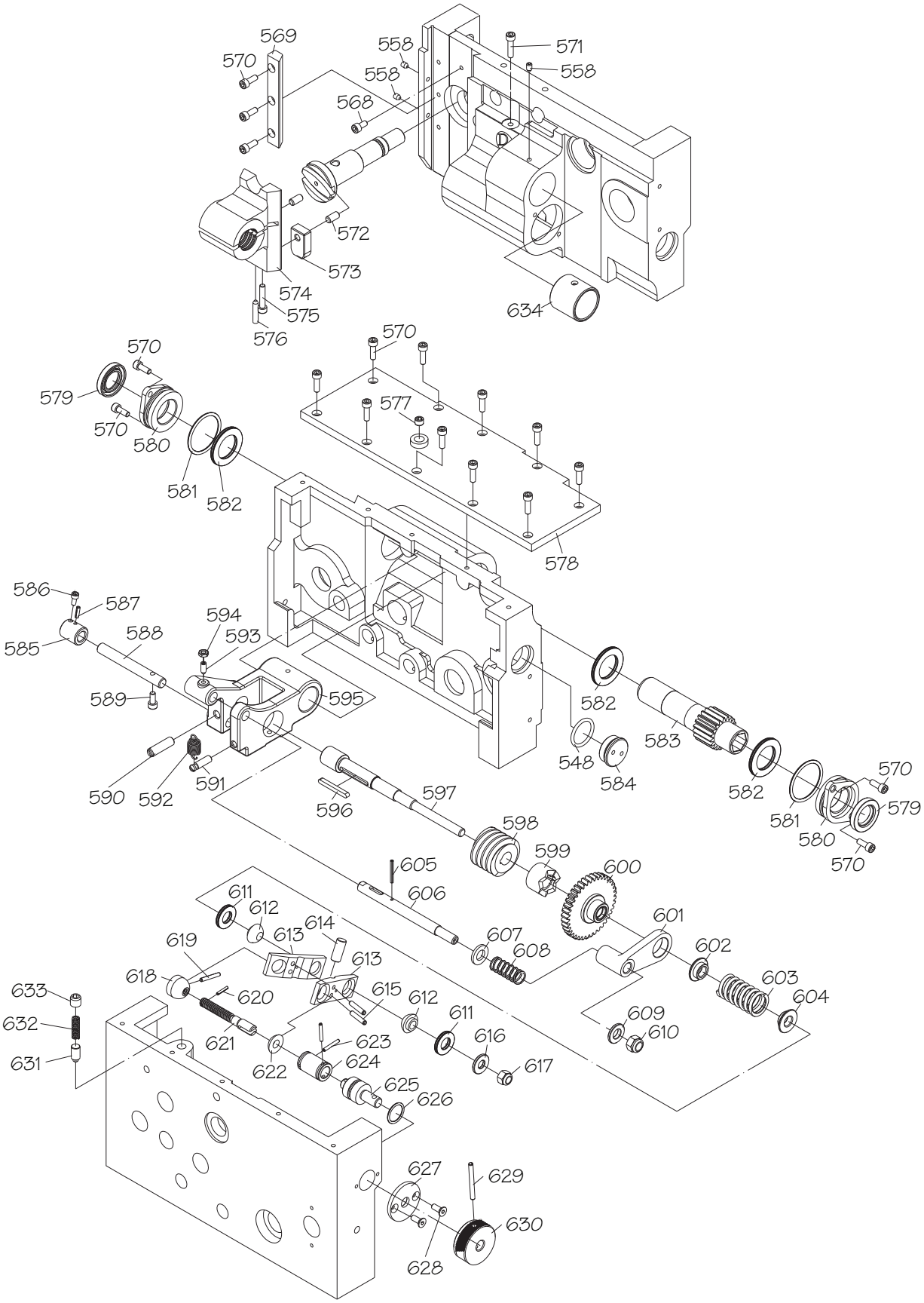
569
570
558
558
571
558
568
572
573
574
575
576
634
570
579
570
580
581
582
570
577
578
586
587
585
588
589
594
593
595
590
592
591
596
597
598
599
600
605
606
611
612
613
614
619
618
620
621
622
623
624
625
626
607
608
601
602
603
604
609
610
633
632
631
615
612
611
616
617
627
628
629
630
582
548
584
583
582
581
580
570
579
570

Apron Parts List

REF	PART #	DESCRIPTION
501	PSB1046PF0501	HANDLE CAP SCREW
502	PSB1046PF0502	HANDLE
503	PSS12M	SET SCREW M6-1 X 25
504	PSB1046PF0504	HANDWHEEL CENTER CAP
505	PSB1046PF0505	HANDWHEEL
506	PSTB001	STEEL BALL 1/4
507	PSB1046PF0507	COMPRESSION SPRING
508	PSB1046PF0508	GRADUATED DIAL
509	PFH05M	FLAT HD SCR M5-.8 X 12
510	PSB1046PF0510	GRADUATED DIAL BASE
511	PSB1046PF0511	WOODRUFF KEY 19 X 5
512	PSB1046PF0512	GEAR SHAFT
513	PSB1046PF0513	PLUG
514	PR07M	EXT RETAINING RING 18MM
515	PSB1046PF0515	SPACER
516	PSB1046PF0516	NEEDLE ROLLER BEARING 18/20
517	PSB1046PF0517	SPACER
518	PR11M	EXT RETAINING RING 25MM
519	PSB1046PF0519	GEAR 56T
520	PSB1046PF0520	NEEDLE ROLLER BEARING 28/20
521	PSB1046PF0521	NOTCHED SPACER
522	PSB1046PF0522	GEAR SHAFT
523	PRIV018M	STEEL FLUTED RIVET 2.8 X 10
524	PSB1046PF0524	KNOB LABEL
525	PSB1046PF0525	SHAFT
526	PSB1046PF0526	GEAR SPACER
527	PSB1046PF0527	COMBO GEAR 15T/33T
528	PSB1046PF0528	GEAR SPACER
529	PSB1046PF0529	APRON PIN
530	PSB1046PF0530	SIGHT GLASS
531	PSB1046PF0531	SHAFT
532	PSB1046PF0532	NEEDLE BEARING TLA1616
533	PSB1046PF0533	GEAR SHAFT 26T
534	PSB1046PF0534	NEEDLE ROLLER BEARING TLA3016
535	PSB1046PF0535	GEAR 24T
536	PSB1046PF0536	GEAR 24T
537	PSB1046PF0537	SPLINED GEAR
538	PR15M	EXT RETAINING RING 30MM
539	PSB1046PF0539	COLLAR
540	PSB1046PF0540	SLOTTED DOWEL PIN
541	PSB1046PF0541	INDICATOR PLATE
542	PSB1046PF0542	SHIFT SHAFT
543	PSB1046PF0543	GEAR 24T
545	PSB1046PF0545	GEAR SHAFT
546	PSB1046PF0546	GEAR 24T
547	PSB1046PF0547	HANDLE ASSEMBLY
548	PORP021	O-RING 20.8 X 2.4 P21
549	PSB1046PF0549	SHIFT KNUCKLE
550	PR81M	EXT RETAINING RING 21MM
551	PFH38M	FLAT HD SCR M6-1 X 16
552	PSB1046PF0552	LEVER HUB FLAT WASHER
553	PSS20M	SET SCREW M8-1.25 X 8
554	PSB1046PF0554	COMPRESSION SPRING
555	PSB1046PF0555	HALF-NUT LEVER ASSEMBLY
557	PSB1046PF0557	O-RING G-25
558	PSS03M	SET SCREW M6-1 X 8
559	PSB1046PF0559	COMPRESSION SPRING
560	PSB1046PF0560	WOODRUFF KEY 16 X 5MM
561	PSB1046PF0561	CAM SHAFT
562	PSS84M	SET SCREW M10-1.5 X 35
563	PSS30M	SET SCREW M10-1.5 X 10
564	PSB1046PF0564	APRON CASTING
565	PSS75M	SET SCREW M10-1.5 X 16
566	PSB1046PF0566	COMPRESSION SPRING
567	PSTB003	STEEL BALL 3/8"
568	PCAP26M	CAP SCREW M6-1 X 12
569	PSB1046PF0569	HALF-NUT GIB
570	PCAP01M	CAP SCREW M6-1 X 16
571	PCAP07M	CAP SCREW M6-1 X 30
572	PSB1046PF0572	DOWEL PIN
573	PSB1046PF0573	HALF-NUT PLATE
574	PSB1046PF0574	HALF-NUT ASSEMBLY
575	PCAP07M	CAP SCREW M6-1 X 30
576	PSS28M	SET SCREW M6-1 X 30
577	PSB1046PF0577	PLUG 1/4" NPT
578	PSB1046PF0578	APRON TOP PLATE
579	PSB1046PF0579	OIL SEAL 30 X 40 X 5
580	PSB1046PF0580	SLEEVE
581	PORG045	O-RING 44.4 X 3.1 G45
582	PSB1046PF0582	THRUST BEARING 3047-NTB/AS2
583	PSB1046PF0583	GEARED PINION SHAFT 18T
584	PSB1046PF0584	CASTING PLUG
585	PSB1046PF0585	COLLAR
586	PCAP26M	CAP SCREW M6-1 X 12
587	PRP76M	ROLL PIN 4 X 16
588	PSB1046PF0588	BRACKET SHAFT
589	PCAP38M	CAP SCREW M5-.8 X 25
590	PSB1046PF0590	SLOTTED DOWEL PIN
591	PSB1046PF0591	CAPTIVE PIN
592	PSB1046PF0592	EXTENSION SPRING
593	PSS91M	SET SCREW M6-1 X 14
594	PLN03M	LOCK NUT M6-1
595	PSB1046PF0595	BRACKET
596	PK33M	KEY 5 X 5 X 45
597	PSB1046PF0597	WORM SHAFT
598	PSB1046PF0598	WORM GEAR
599	PSB1046PF0599	CLUTCH
600	PSB1046PF0600	CLUTCH GEAR 36T
601	PSB1046PF0601	PIVOT ARM
602	PSB1046PF0602	SPRING CUP
603	PSB1046PF0603	COMPRESSION SPRING

Apron Parts List

REF	PART #	DESCRIPTION
604	PSB1046PF0604	SPRING CUP
605	PRP04M	ROLL PIN 4 X 24
606	PSB1046PF0606	TRIP ROD
607	PSB1046PF0607	TRIP ROD SPACER
608	PSB1046PF0608	COMPRESSION SPRING
609	PSB1046PF0609	TRIP ROD OUTER SPACER
610	PLN09M	LOCK NUT M12-1.75
611	PSB1046PF0611	THRUST BEARING NTB1528/AS2
612	PSB1046PF0612	FLANGED BEARING
613	PSB1046PF0613	COMPRESSION PLATE
614	PSB1046PF0614	DOWEL PIN
615	PRP05M	ROLL PIN 5 X 30
616	PSB1046PF0616	WORM SHAFT FLAT WASHER 10MM
617	PLN05M	LOCK NUT M10-1.5
618	PSB1046PF0618	DOMED NUT
619	PRP04M	ROLL PIN 4 X 24

REF	PART #	DESCRIPTION
620	PRP02M	ROLL PIN 3 X 16
621	PSB1046PF0621	THREADED SHAFT
622	PSB1046PF0622	COMPRESSION PLATE FLAT WASHER
623	PRP105M	ROLL PIN 3 X 24
624	PSB1046PF0624	COUPLER
625	PSB1046PF0625	STEPPED SHAFT
626	P0RP018	O-RING 17.8 X 2.4 P18
627	PSB1046PF0627	SHAFT END CAP
628	PFH74M	FLAT HD CAP SCR M5-.8 X 16
629	PRP10M	ROLL PIN 5 X 36
630	PSB1046PF0630	KNURLED KNOB
631	PSB1046PF0631	PLUNGER
632	PSB1046PF0632	COMPRESSION SPRING
633	PSS15M	SET SCREW M12-1.75 X 12
634	PSB1046PF0634	SHAFT SLEEVE

End Gears

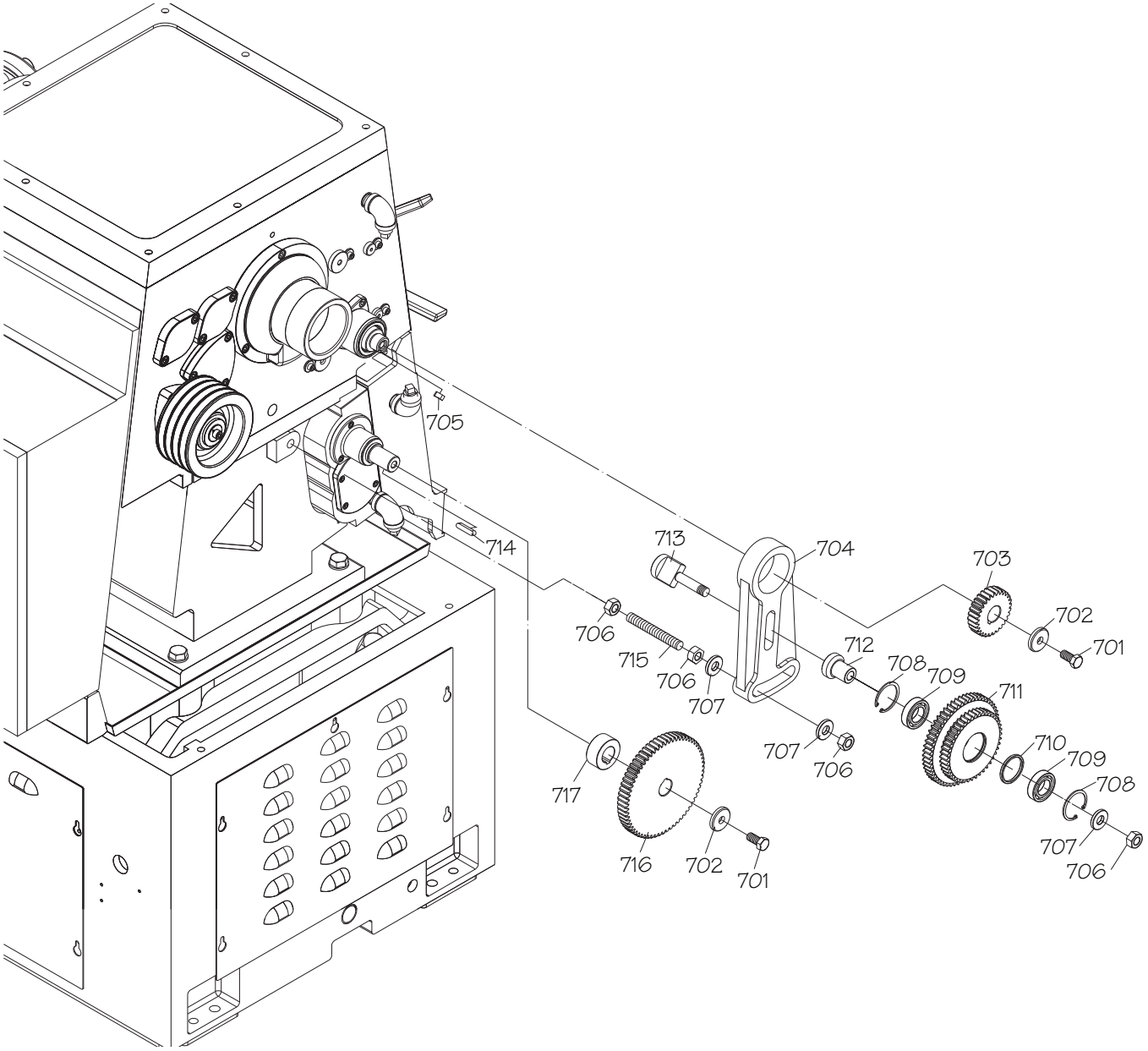

REF	PART #	DESCRIPTION
701	PB25M	HEX BOLT M12-1.75 X 25
702	PSB1046PF0702	GEAR FLAT WASHER
703	PSB1046PF0703	GEAR 24T (SB1046PF-48PF)
703	PSB1056F0703	GEAR 24T (SB1056F-58F)
704	PSB1046PF0704	PIVOT ARM (SB1046PF-48PF)
704	PSB1056F0704	PIVOT ARM (SB1056F-58F)
705	PK166M	KEY 7 X 7 X 15
706	PN32M	HEX NUT M14-2
707	PSB1046PF0707	GEAR FLAT WASHER
708	PR25M	INT RETAINING RING 47MM
709	P6005ZZ	BALL BEARING 6005ZZ

REF	PART #	DESCRIPTION
710	PSB1046PF0710	SPACER
711	PSB1046PF0711	GEAR 44T/56T (SB1046PF-48PF)
711	PSB1056F0711	GEAR 44T/56T (SB1056F-58F)
712	PSB1046PF0712	SHAFT SLEEVE
713	PSB1046PF0713	T-HEAD SHAFT
714	PK109M	KEY 7 X 7 X 35
715	PSB1046PF0715	STUD-FT M14-2 X 110
716	PSB1046PF0716	GEAR 57T (SB1046PF-48PF)
716	PSB1056F0716	GEAR 57T (SB1056F-58F)
717	PSB1046PF0717	GEAR SPACER

Motor & Headstock Oil System

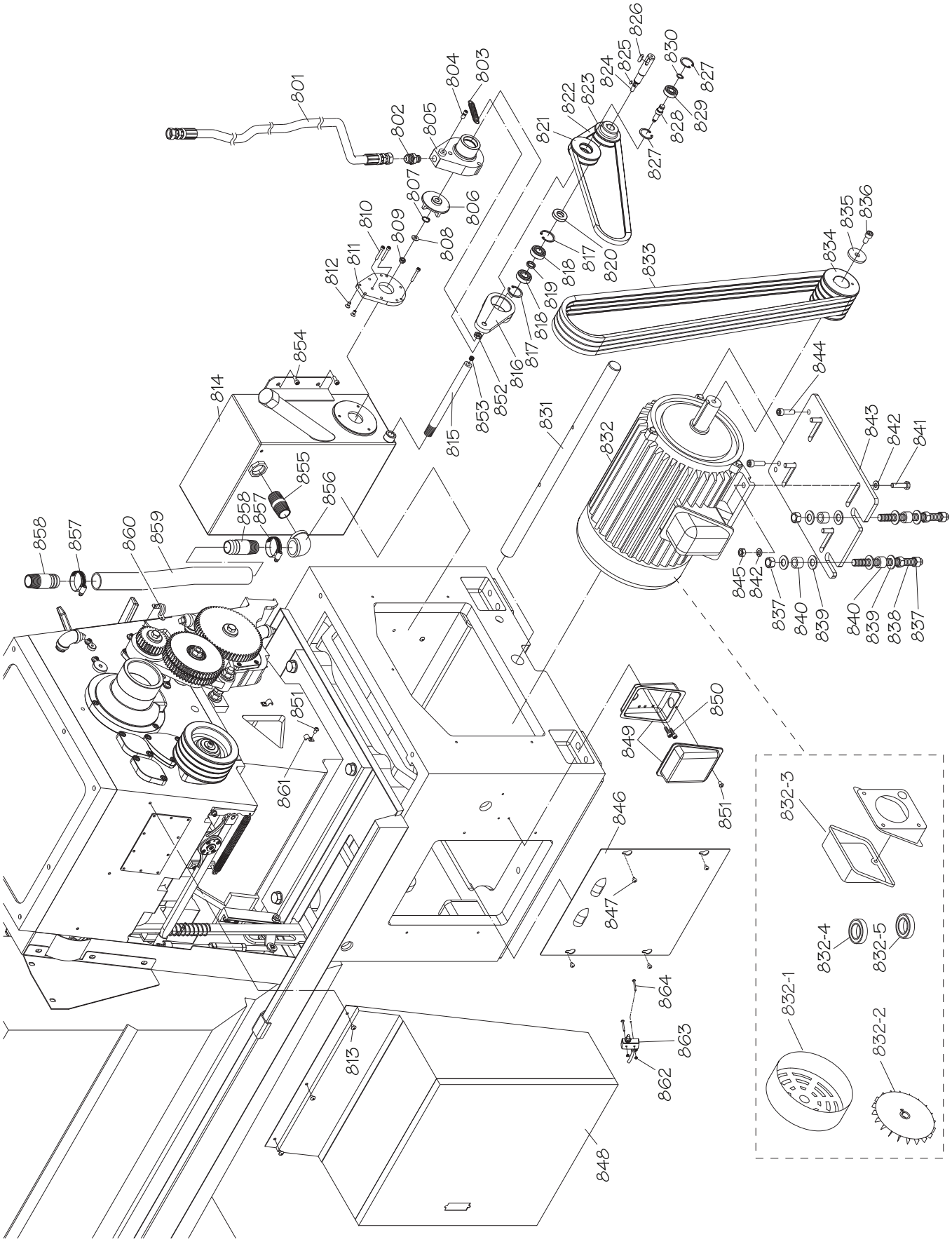

Motor & Headstock Oil System Parts List

REF	PART #	DESCRIPTION
801	PSB1046PF0801	OIL HOSE 5/8"
802	PSB1046PF0802	OIL HOSE FITTING 5/8" NPT
803	PSB1046PF0803	EXTENSION SPRING
804	PSB1046PF0804	RETAINING SCREW
805	PSB1046PF0805	PUMP HOUSING
806	PSB1046PF0806	PUMP IMPELLER
807	PR05M	EXT RETAINING RING 15MM
808	PW01M	FLAT WASHER 8MM
809	PN03M	HEX NUT M8-1.25
810	PCAP79M	CAP SCREW M5-.8 X 35
811	PSB1046PF0811	OIL PUMP BACK PLATE
812	PFH02M	FLAT HD SCR M6-1 X 12
813	PBHS38M	BUTTON HD CAP SCR M5-.8 X 8
814	PSB1046PF0814	OIL TANK
815	PSB1046PF0815	OIL TANK DRAIN PIPE
816	PSB1046PF0816	IDLER ARM
817	PR21M	INT RETAINING RING 35MM
818	P6202ZZ	BALL BEARING 6202ZZ
819	PSB1046PF0819	SPACER
820	PSB1046PF0820	OIL SEAL 18 X 37 X 5MM
821	PSB1046PF0821	IDLER PULLEY
822	PVA38	V-BELT A38
823	PSB1046PF0823	PUMP PULLEY
824	PSB1046PF0824	PUMP INPUT SHAFT
825	PK29M	KEY 4 X 4 X 8
826	PK07M	KEY 6 X 6 X 20
827	PR29M	INT RETAINING RING 32MM
828	PSB1046PF0828	IDLER PULLEY SHAFT
829	P6201ZZ	BALL BEARING 6201ZZ
830	PR03M	EXT RETAINING RING 12MM
831	PSB1046PF0831	MOTOR MOUNT SHAFT 32 X 625MM
832	PSB1046PF0832	MOTOR 15HP 440V 3PH 60HZ
832-1	PSB1046PF0832-1	MOTOR FAN COVER
832-2	PSB1046PF0832-2	MOTOR FAN
832-3	PSB1046PF0832-3	MOTOR JUNCTION BOX
832-4	PSB1046PF0832-4	FRONT MOTOR BEARING
832-5	PSB1046PF0832-5	REAR MOTOR BEARING
833	PVA79	V-BELT A79 (SB1046PF-48PF)
833	PVA75	V-BELT A75 (SB1056F-58F)
834	PSB1046PF0834	MOTOR PULLEY
835	PSB1046PF0835	PULLEY FLAT WASHER 12 X 45 X 5
836	PCAP64M	CAP SCREW M10-1.5 X 25
837	PN13M	HEX NUT M16-2
838	PSB1046PF0838	THREADED ROD M16-2
839	PSB1046PF0839	FLAT WASHER 16.5 X 40
840	PSB1046PF0840	RUBBER SPACER
841	PB31M	HEX BOLT M10-1.5 X 40
842	PW04M	FLAT WASHER 10MM
843	PSB1046PF0843	MOTOR MOUNT PLATE
844	PCAP64M	CAP SCREW M10-1.5 X 25
845	PN02M	HEX NUT M10-1.5
846	PSB1046PF0846	REAR MOTOR ACCESS PLATE
847	PBHS09M	BUTTON HD CAP SCR M6-1 X 12
848	PSB1046PF0848	ELECTRICAL BOX ASSEMBLY
849	PSB1046PF0849	JUNCTION BOX
850	PCAP06M	CAP SCREW M6-1 X 25
851	PBHS38M	BUTTON HD CAP SCR M5-.8 X 8
852	PN02M	HEX NUT M10-1.5
853	PSB1046PF0853	PLUG 1/4" NPT
854	PCAP11M	CAP SCREW M8-1.25 X 16
855	PSB1046PF0855	HOSE COUPLER 1" NPT
856	PSB1046PF0856	ELBOW 1" NPT
857	PSB1046PF0857	HOSE CLAMP 3/4"
858	PSB1046PF0858	HOSE CONNECTOR 1" X 75MM
859	PSB1046PF0859	OIL RETURN HOSE
860	PSB1046PF0860	HOSE CLIP
861	PSB1046PF0861	HOSE CLIP
862	PN04M	HEX NUT M4-.7
863	PSB1042PF1160	END COVER SAFETY SWITCH TM1307
864	PS65M	PHLP HD SCR M4-.7 X 40

Saddle 1

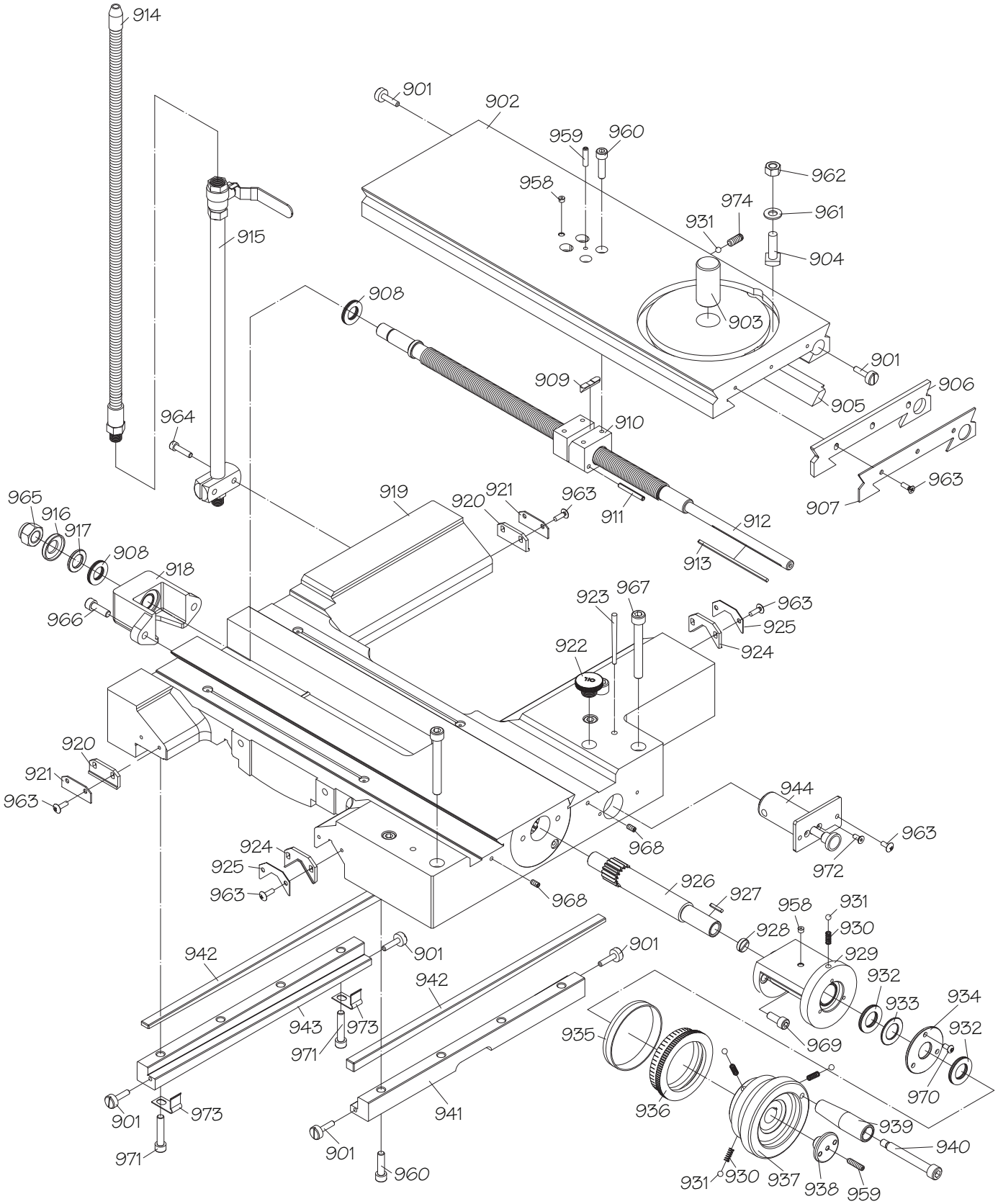
914
901
902
959
960
958
962
974
961
931
904
915
908
903
901
909
906
905
964
910
963
907
965
916
917
919
920
921
963
911
912
908
918
913
966
923
967
963
925
922
924
920
921
963
944
963
968
924
925
963
972
926
927
958
931
968
928
930
942
901
929
901
942
932
933
934
943
973
971
935
969
932
970
936
901
973
941
939
940
971
901
960
931
930
937
938
959

Saddle 2

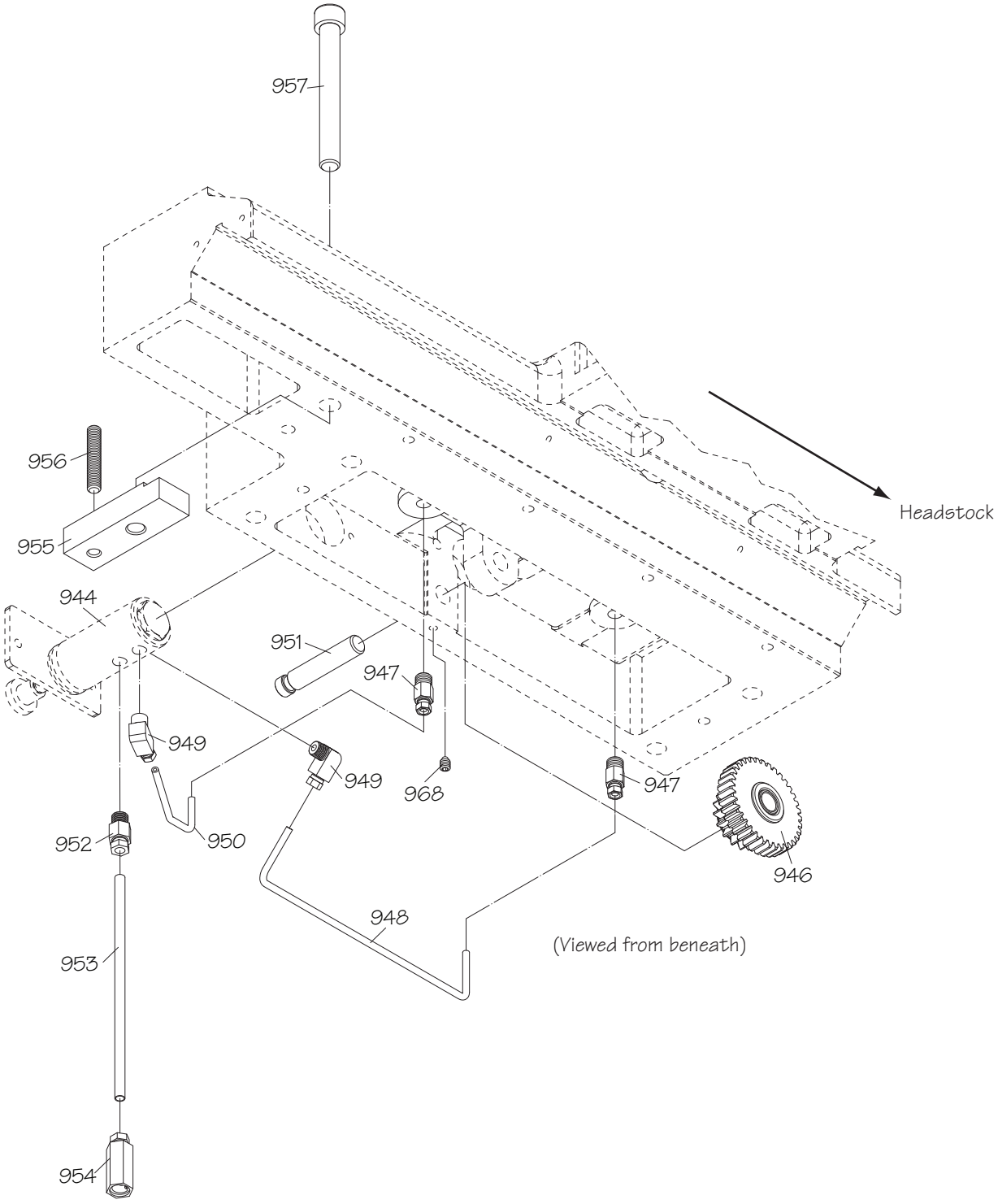
957
956
955
944
951
947
949
949
968
947
952
950
946
948
953
954
Headstock
(Viewed from beneath)

Saddle Parts List

REF	PART #	DESCRIPTION
901	PSB1046PF0901	GIB ADJUST SCREW
902	PSB1046PF0902	CROSS SLIDE
903	PSB1046PF0903	COMPOUND REST PIVOT 25 X 40
904	PSB1046PF0904	COMPOUND REST T-BOLT
905	PSB1046PF0905	CROSS SLIDE GIB
906	PSB1046PF0906	CROSS SLIDE WAY WIPER
907	PSB1046PF0907	CROSS SLIDE WAY WIPER PLATE
908	PSB1046PF0908	THRUST BEARING NTB/AS2 1730
909	PSB1046PF0909	WEDGE 7 X 7 X 30
910	PSB1046PF0910	LEADSCREW HALF NUT
911	PRP28M	ROLL PIN 5 X 40
912	PSB1046PF0912	CROSS SLIDE LEADSCREW
913	PK179M	KEY 3 X 3 X 115
914	PSB1046PF0914	COOLANT NOZZLE 3/8 PT X 24"
915	PSB1046PF0915	COOLANT STAND PIPE ASSY 3/8 PT
916	PSB1046PF0916	BEARING COVER
917	PSB1046PF0917	SPACER
918	PSB1046PF0918	LEADSCREW BRACKET
919	PSB1046PF0919	SADDLE CASTING
920	PSB1046PF0920	SADDLE STRAIGHT WAY WIPER
921	PSB1046PF0921	SADDLE STRAIGHT WAY WIPER PLATE
922	PSB1046PF0922	OIL FILL CAP
923	PSB1046PF0923	TAPER PIN #6 X 2-1/2"
924	PSB1046PF0924	SADDLE V-WAY WIPER
925	PSB1046PF0925	SADDLE V-WAY WIPER PLATE
926	PSB1046PF0926	CROSS SLIDE PINION SHAFT 16T
927	PK96M	KEY 3 X 3 X 20
928	PSB1046PF0928	SHAFT CAP M16-2 X 5
929	PSB1046PF0929	PINION SHAFT BRACKET
930	PSB1046PF0930	COMPRESSION SPRING
931	PSTB001	STEEL BALL 1/4
932	PSB1046PF0932	THRUST BEARING NTB/AS2 2035
933	PSB1046PF0933	SPACER
934	PSB1046PF0934	PINION SHAFT END CAP
935	PSB1046PF0935	GRADUATED DIAL BASE RING
936	PSB1046PF0936	GRADUATED DIAL
937	PSB1046PF0937	HANDWHEEL
938	PSB1046PF0938	HANDWHEEL END CAP
939	PSB1046PF0939	HANDWHEEL HANDLE
940	PSB1046PF0940	HANDLE CAP SCREW
941	PSB1046PF0941	FRONT SADDLE GIB SUPPORT
942	PSB1046PF0942	SADDLE GIB
943	PSB1046PF0943	REAR SADDLE GIB SUPPORT
944	PSB1046PF0944	ONE-SHOT OILER ASSEMBLY
946	PSB1046PF0946	GEAR 16T/36T
947	PSB1046PF0947	COUPLER 1/8"-4MM
948	PSB1046PF0948	ALUMINUM OIL TUBE 4 X 258MM
949	PSB1046PF0949	ELBOW COUPLER 1/8"-4MM
950	PSB1046PF0950	ALUMINUM OIL TUBE 4 X 121MM
951	PSB1046PF0951	CAPTIVE PIN
952	PSB1046PF0952	COUPLER 1/8"-6MM
953	PSB1046PF0953	ALUMINUM OIL TUBE 6 X 175MM
954	PSB1046PF0954	OIL FILTER 6MM
955	PSB1046PF0955	CLAMP PLATE
956	PSS44M	SET SCREW M8-1.25 X 40
957	PCAP187M	CAP SCREW M12-1.75 X 85
958	PLUBE001	TAP-IN BALL OILER 1/4
959	PSS12M	SET SCREW M6-1 X 25
960	PCAP13M	CAP SCREW M8-1.25 X 30
961	PW04M	FLAT WASHER 10MM
962	PN02M	HEX NUT M10-1.5
963	PBHS06M	BUTTON HD CAP SCR M5-.8 X 12
964	PCAP06M	CAP SCREW M6-1 X 25
965	PSB1046PF0965	NUT M16
966	PCAP38M	CAP SCREW M5-.8 X 25
967	PSB1046PF0967	CAP SCREW M10-1.25 X 80
968	PSS03M	SET SCREW M6-1 X 8
969	PCAP14M	CAP SCREW M8-1.25 X 20
970	PSBHS35M	BUTTON HD CAP SCR M5-.8 X 10
971	PCAP12M	CAP SCREW M8-1.25 X 40
972	PFH05M	FLAT HD SCR M5-.8 X 12
973	PSB1046PF0973	GIB RETAINING CLIP
974	PSS09M	SET SCREW M8-1.25 X 20

Tool Post & Compound Rest

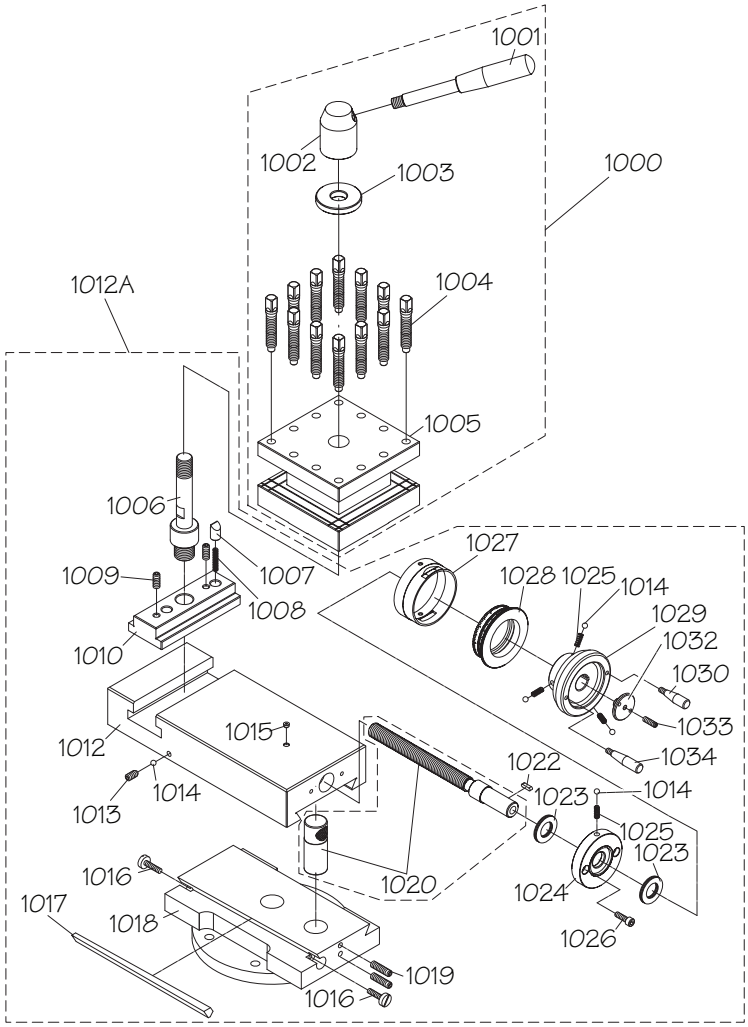

REF	PART #	DESCRIPTION
1000	PSB1046PF1000	4-WAY TOOL POST ASSEMBLY
1001	PSB1046PF1001	TOOL POST LEVER
1002	PSB1046PF1002	TOOL POST LEVER HUB
1003	PSB1046PF1003	HUB THRUST WASHER
1004	PSB1046PF1004	TOOL POST BOLT
1005	PSB1046PF1005	POST BODY
1006	PSB1046PF1006	POST SHAFT
1007	PSB1046PF1007	TOOL POST PLUNGER
1008	PSB1046PF1008	COMPRESSION SPRING
1009	PSS09M	SET SCREW M8-1.25 X 20
1010	PSB1046PF1010	TOOL POST T-SLIDER
1012A	PSB1046PF1012A	COMPOUND REST ASSEMBLY (SB1046PF-48PF)
1012A	PSB1056F1012A	COMPOUND REST ASSEMBLY (SB1056F-58F)
1012	PSB1046PF1012	COMPOUND REST (SB1046PF-48PF)
1012	PSB1056F1012	COMPOUND REST (SB1056F-58F)
1013	PSS06M	SET SCREW M8-1.25 X 16
1014	PSTB001	STEEL BALL 1/4
1015	PLUBE001	TAP-IN BALL OILER 1/4

REF	PART #	DESCRIPTION
1016	PSB1046PF1016	GIB ADJUSTMENT SCREW
1017	PSB1046PF1017	COMPOUND REST GIB
1018	PSB1046PF1018	COMPOUND REST BASE (SB1046PF-48PF)
1018	PSB1056F1018	COMPOUND REST BASE (SB1056F-58F)
1019	PSS19M	SET SCREW M8-1.25 X 30
1020	PSB1046PF1020	COMPOUND REST LEADSCREW W/NUT
1022	PK47M	KEY 4 X 4 X 15
1023	PSB1046PF1023	THRUST BEARING NTB/AS2 2035
1024	PSB1046PF1024	LEADSCREW BRACKET
1025	PSB1046PF1025	COMPRESSION SPRING
1026	PCAP02M	CAP SCREW M6-1 X 20
1027	PSB1046PF1027	GRADUATED DIAL BASE
1028	PSB1046PF1028	GRADUATED DIAL
1029	PSB1046PF1029	HANDWHEEL
1030	PSB1046PF1030	HANDWHEEL HANDLE
1032	PSB1046PF1032	HANDWHEEL END CAP
1033	PSS25M	SET SCREW M6-1 X 20
1034	PSB1046PF1034	HANDWHEEL HANDLE

Bed & Shafts

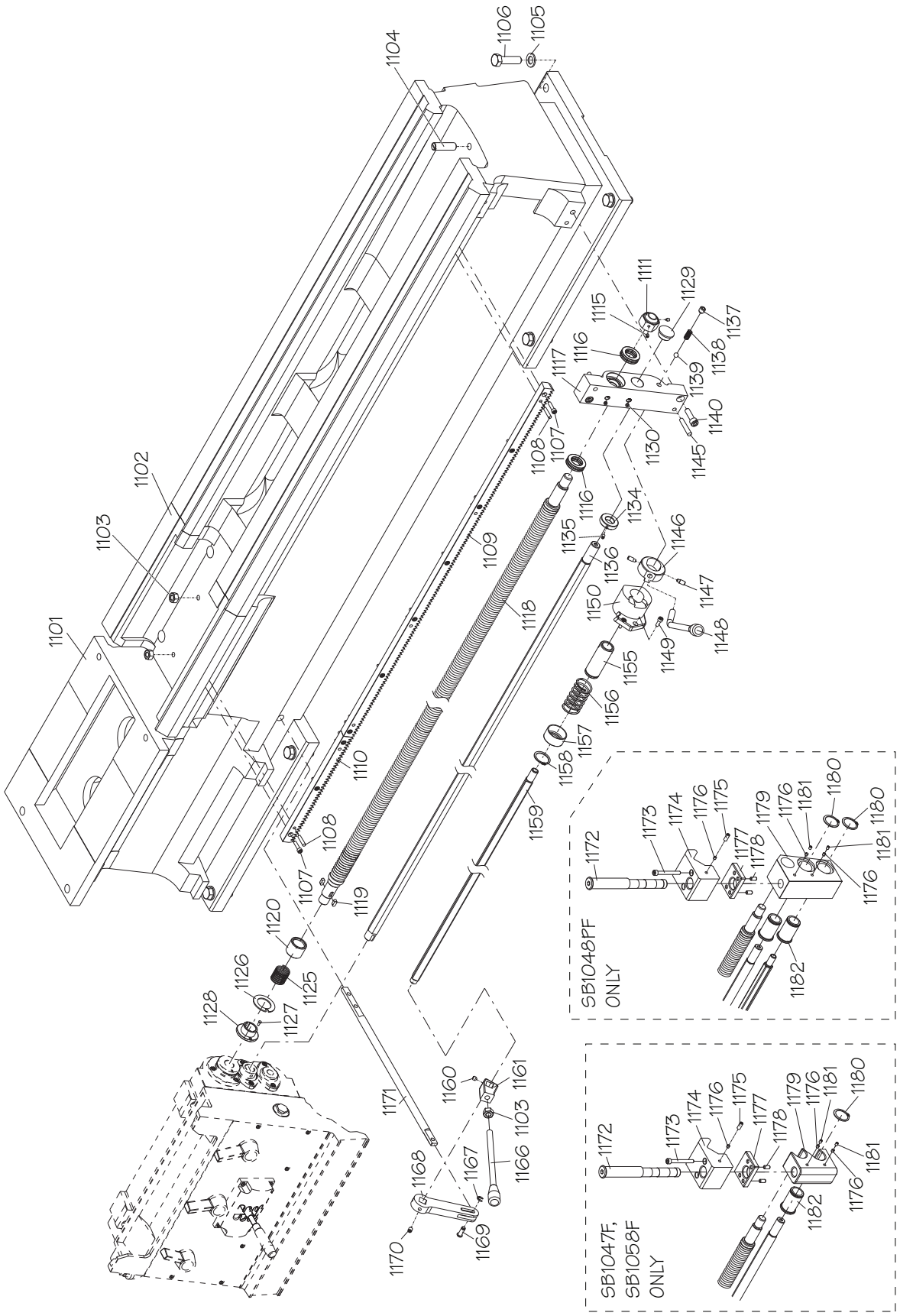
1101
1102
1103
1104
1105
1106
1107
1108
1109
1110
1111
1115
1116
1117
1118
1119
1120
1125
1126
1127
1128
1129
1130
1134
1135
1136
1137
1138
1139
1140
1145
1146
1147
1148
1149
1150
1155
1156
1157
1158
1159
1160
1161
1166
1167
1168
1169
1170
1171
1172
1173
1174
1175
1176
1177
1178
1179
1180
1181
1182
SB1048PF ONLY
SB1047F, SB1058F ONLY

Bed & Shafts Parts List

REF	PART #	DESCRIPTION
1101	PSB1056F1101	LATHE BED 40" (SB1056F)
1101	PSB1046PF1101	LATHE BED 60" (SB1046PF, -57F)
1101	PSB1047F1101	LATHE BED 80" (SB1047F, -58F)
1101	PSB1048PF1101	LATHE BED 120" (SB1048PF)
1102	PSB1056F1102	LATHE BED GAP (SB1056F)
1102	PSB1046PF1102	LATHE BED GAP (SB1046PF, -57F)
1102	PSB1047F1102	LATHE BED GAP (SB1047F, -58F)
1102	PSB1048PF1102	LATHE BED GAP (SB1048PF)
1103	PN09M	HEX NUT M12-1.75
1104	PSB1046PF1104	BED STOP BOLT
1105	PW08M	FLAT WASHER 16MM
1106	PB80M	HEX BOLT M16-2 X 55
1107	PCAP06M	CAP SCREW M6-1 X 25
1108	PRP08M	ROLL PIN 6 X 30
1109	PSB1056F1109	BED RACK (SB1056F)
1109	PSB1046PF1109	BED RACK (SB1046PF, -57F)
1109	PSB1047F1109	BED RACK (SB1047F, -58F)
1109	PSB1048PF1109	BED RACK (SB1048PF)
1110	PSB1056F1110	GAP RACK (SB1056F)
1110	PSB1046PF1110	GAP RACK (SB1046PF, -57F)
1110	PSB1047F1110	GAP RACK (SB1047F, -58F)
1110	PSB1048PF1110	GAP RACK (SB1048PF)
1111	PSB1046PF1111	LEADSCREW LOCK NUT
1115	PSS03M	SET SCREW M6-1 X 8
1116	P51105	THRUST BEARING 51105
1117	PSB1046PF1117	SHAFT END BRACKET
1118	PSB1056F1118	LEADSCREW (SB1056F)
1118	PSB1046PF1118	LEADSCREW (SB1046PF, -57F)
1118	PSB1047F1118	LEADSCREW (SB1047F, -58F)
1118	PSB1048PF1118	LEADSCREW (SB1048PF)
1119	PK99M	KEY 6 X 6 X 15
1120	PSB1046PF1120	LEADSCREW SPRING HOUSING
1125	PSB1046PF1125	LEADSCREW SPRING
1126	PSB1046PF1126	KEYED LEADSCREW FLAT WASHER
1127	PSB101609327	SHEAR PIN
1128	PSB1046PF1128	LEADSCREW FLANGE BUSHING
1129	PSB1046PF1129	FEED ROD END CAP
1130	PLUBE001	TAP-IN BALL OILER 1/4
1134	PSB1046PF1134	LOCK COLLAR
1135	PSS01M	SET SCREW M6-1 X 10
1136	PSB1056F1136	FEED ROD (SB1056F)
1136	PSB1046PF1136	FEED ROD (SB1046PF, -57F)

REF	PART #	DESCRIPTION
1136	PSB1047F1136	FEED ROD (SB1047F, -58F)
1136	PSB1048PF1136	FEED ROD (SB1048PF)
1137	PSS15M	SET SCREW M12-1.75 X 12
1138	PSB1046PF1138	COMPRESSION SPRING
1139	PSTB003	STEEL BALL 3/8"
1140	PCAP84M	CAP SCREW M10-1.5 X 35
1145	PSB1046PF1145	TAPER PIN 7 X 50
1146	PSB1046PF1146	SPINDLE ON/OFF LEVER HUB
1147	PSB1046PF1147	STEP PIN
1148	PSB1046PF1148	SPINDLE ON/OFF LEVER
1149	PCAP01M	CAP SCREW M6-1 X 16
1150	PSB1046PF1150	SPINLE LEVER SELECTOR BRACKET
1155	PSB1046PF1155	SPINDLE ROD SLEEVE
1156	PSB1046PF1156	SPINDLE ROD COMPRESSION SPRING
1157	PSB1046PF1157	SPINDLE ROD SPRING COVER
1158	PR37M	EXT RETAINING RING 32MM
1159	PSB1056F1159	SPINDLE ROD (SB1056F)
1159	PSB1046PF1159	SPINDLE ROD (SB1046PF, -57F)
1159	PSB1047F1159	SPINDLE ROD (SB1047F, -58F)
1159	PSB1048PF1159	SPINDLE ROD (SB1048PF)
1160	PSS20M	SET SCREW M8-1.25 X 8
1161	PSB1046PF1161	SPINDLE ROD LEVER HUB
1166	PSB1046PF1166	SPINDLE ROD LEVER
1167	PEC015M	E-CLIP 8MM
1168	PSB1046PF1168	SPINDLE SWITCH PIVOT ARM
1169	PSB1046PF1169	SPINDLE SWITCH PIVOT PIN
1170	PSS14M	SET SCREW M8-1.25 X 12
1171	PSB1046PF1171	SPINDLE SWITCH LINKAGE
1172	PSB1047F1172	STEP SHAFT (SB1047F, -58F)
1172	PSB1048PF1172	STEP SHAFT (SB1048PF)
1173	PCAP128M	CAP SCREW M8-1.25 X 70
1174	PSB1047F1174	BED CLAMP (SB1047F, -58F)
1174	PSB1048PF1174	BED CLAMP (SB1048PF)
1175	PSS09M	SET SCREW M8-1.25 X 20
1176	PSB1047F1176	PLUNGER
1177	PSB1047F1177	LOWER CLAMP PLATE
1178	PSS06M	SET SCREW M8-1.25 X 16
1179	PSB1047F1179	SHAFT SUPPORT (SB1047F, -58F)
1179	PSB1048PF1179	SHAFT SUPPORT (SB1048PF)
1180	PR12M	EXT RETAINING RING 35MM
1181	PSS20M	SET SCREW M8-1.25 X 8
1182	PSB1047F1182	BUSHING

Stands & Panels (SB1046PF-47F, SB1056F-58F)

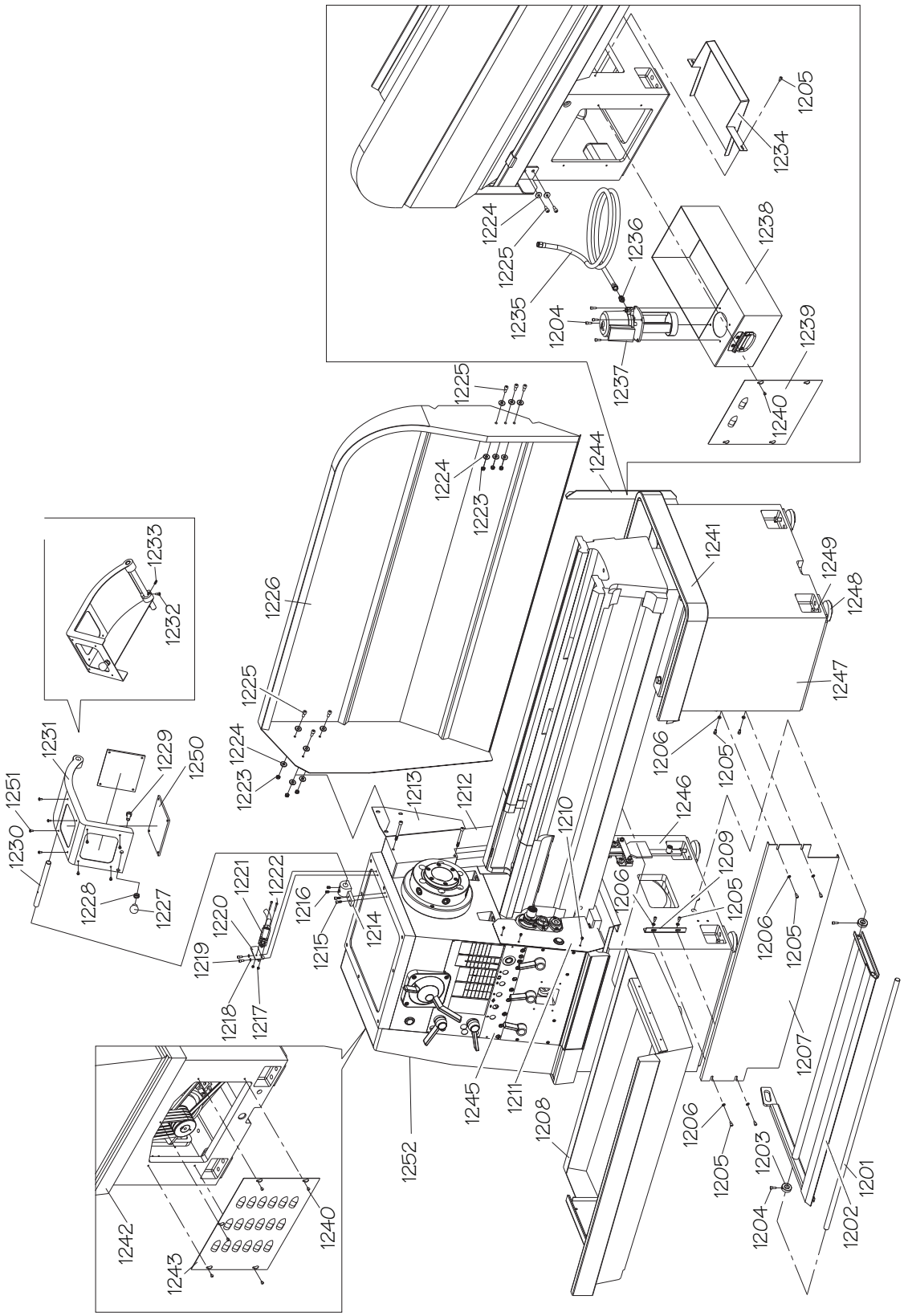

Stand & Panels Parts List (SB1046PF-47F, SB1056F-58F)

REF	PART #	DESCRIPTION
1201	PSB1056F1201	BRAKE PEDAL SHAFT (SB1056F)
1201	PSB1046PF1201	BRAKE PEDAL SHAFT (SB1046PF, -57F)
1201	PSB1047F1201	BRAKE PEDAL SHAFT (SB1047F, -58F)
1202	PSB1056F1202	BRAKE PEDAL (SB1056F)
1202	PSB1046PF1202	BRAKE PEDAL (SB1046PF, -57F)
1202	PSB1047F1202	BRAKE PEDAL (SB1047F, -58F)
1203	PSB1046PF1203	PEDAL SHAFT LOCK COLLAR
1204	PCAP01M	CAP SCREW M6-1 X 16
1205	PCAP04M	CAP SCREW M6-1 X 10
1206	PW03M	FLAT WASHER 6MM
1207	PSB1056F1207	CENTER PANEL (SB1056F)
1207	PSB1046PF1207	CENTER PANEL (SB1046PF, -57F)
1207	PSB1047F1207	CENTER PANEL (SB1047F, -58F)
1208	PSB1056F1208	CHIP DRAWER (SB1056F)
1208	PSB1046PF1208	CHIP DRAWER (SB1046PF, -57F)
1208	PSB1047F1208	CHIP DRAWER (SB1047F, -58F)
1209	PSB1046PF1209	CENTER PANEL BRACKET
1210	PBHS38M	BUTTON HD CAP SCR M5-.8 X 8
1211	PSB1046PF1211	SHAFT CLUTCH COVER (SB1046PF-47F)
1211	PSB1056F1211	SHAFT CLUTCH COVER (SB1056F-58F)
1212	PSB1046PF1212	BRAKE LINKAGE GUARD
1213	PSB1046PF1213	BACKSPLASH MOUNT (SB1046PF-47F)
1213	PSB1056F1213	BACKSPLASH MOUNT (SB1056F-58F)
1214	PSB1046PF1214	CHUCK GUARD PIVOT BRACKET
1215	PB56M	CAP SCREW M10-1.5 X 20
1216	PSS14M	SET SCREW M8-1.25 X 12
1217	PN04M	HEX NUT M4-.7
1218	PLW03M	LOCK WASHER 6MM
1219	PCAP26M	CAP SCREW M6-1 X 12
1220	PSB1046PF1220	SAFETY SWITCH BRACKET
1221	PSB1046PF1221	CHUCK GUARD SAFETY SWITCH TZ9212
1222	PBHCS38M	BUTTON HD CAP SCR M4-.7 X 40
1223	PN03M	HEX NUT M8-1.25
1224	PW01M	FLAT WASHER 8MM
1225	PCAP14M	CAP SCREW M8-1.25 X 20

REF	PART #	DESCRIPTION
1226	PSB1056F1226	BACKSPLASH (SB1056F)
1226	PSB1046PF1226	BACKSPLASH (SB1046PF, -57F)
1226	PSB1047F1226	BACKSPLASH (SB1047F, -58F)
1227	PSB1046PF1227	CHUCK GUARD KNOB 1/2-13
1228	PN06	HEX NUT 1/2-13
1229	PB52	HEX BOLT 1/2-13 X 1
1230	PSB1046PF1230	CHUCK GUARD PIVOT ROD
1231	PSB1046PF1231	CHUCK SAFETY GUARD
1232	PCAP26M	CAP SCREW M6-1 X 12
1233	PSS34M	SET SCREW M5-.8 X 16
1234	PSB1046PF1234	COOLANT CHUTE
1235	PSB1056F1235	HOSE 3/8 X 72" (SB1056F)
1235	PSB1046PF1235	HOSE 3/8 X 78" (SB1046PF, -57F)
1235	PSB1047F1235	HOSE 3/8 X 96" (SB1047F, -58F)
1236	PSB1046PF1236	PIPE NIPPLE 3/8 PT X 3/8 PH
1237	PSB1046PF1237	COOLANT PUMP ASSEMBLY
1238	PSB1046PF1238	COOLANT TANK (SB1046PF-48PF)
1239	PSB1056F1238	COOLANT TANK (SB1056F-58F)
1239	PSB1046PF1239	COOLANT TANK COVER
1240	PBHS11M	BUTTON HD CAP SCREW M6-1 X 10
1241	PSB1056F1241	RIGHT SPLASH TRAY (SB1056F)
1241	PSB1046PF1241	RIGHT SPLASH TRAY (SB1046PF, -57F)
1241	PSB1047F1241	RIGHT SPLASH TRAY (SB1047F, -58F)
1242	PSB1046PF1242	LEFT SPLASH TRAY
1243	PSB1046PF1243	MOTOR ACCESS COVER
1244	PSB1046PF1244	BACKSPLASH MOUNTING POST
1245	PSB1046PF1245	CONTROL PANEL
1246	PSB1046PF1246	LEFT CABINET
1247	PSB1046PF1247	RIGHT CABINET
1248	PSB1046PF1248	LEVELING FOOT
1249	PB80M	HEX BOLT M16-2 X 55
1250	PSB1046PF1250	CHUCK GUARD WINDOW PLASTIC
1251	PBHS09M	BUTTON HD CAP SCR M6-1 X 12
1252	PSB1046PF1252	END GEAR COVER ASSY (SB1046PF-48PF)
1252	PSB1056F1252	END GEAR COVER ASSY (SB1056F-58F)

Stand & Panels (SB1048PF)

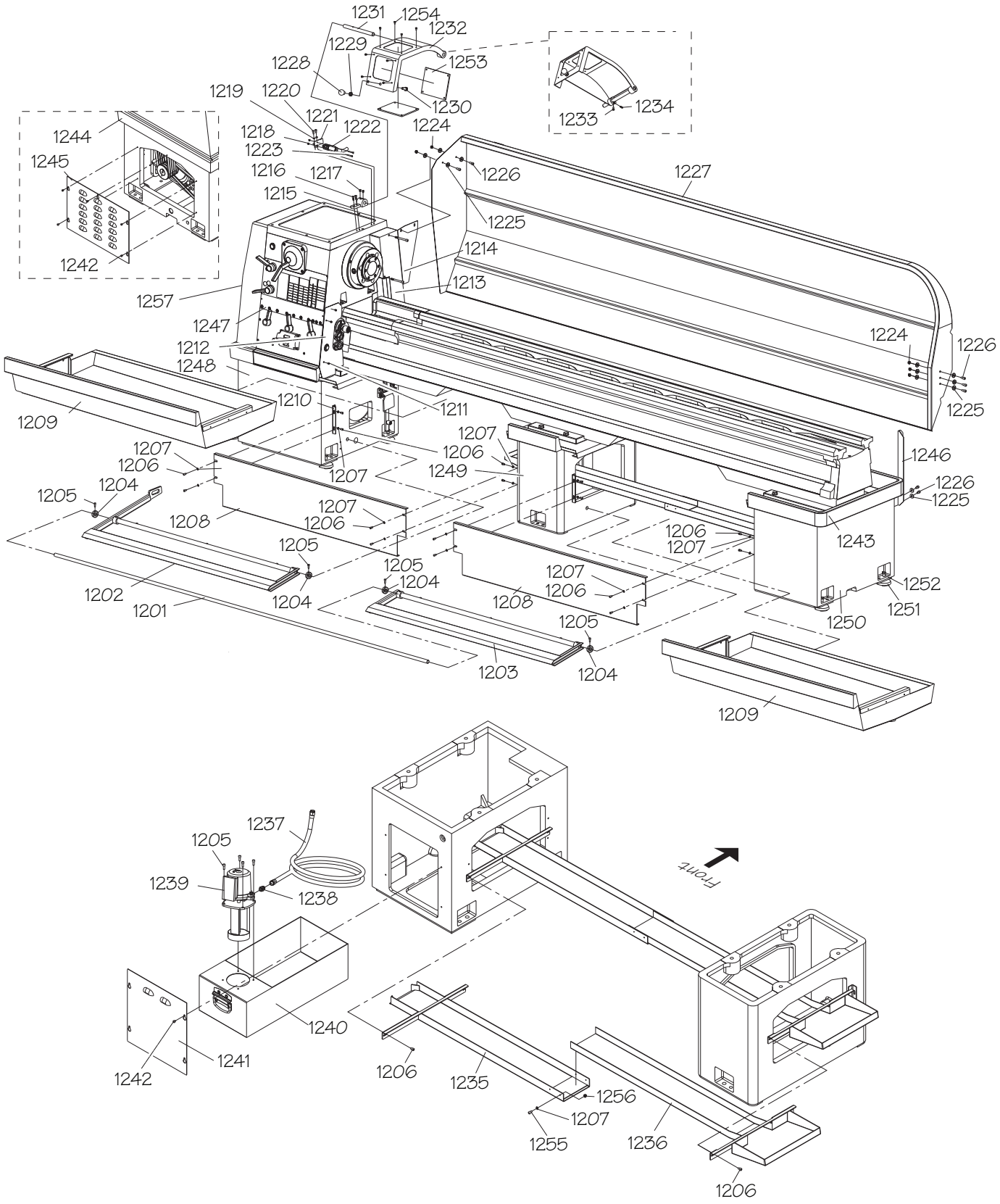

Stand & Panels Parts List (SB1048PF)

REF	PART #	DESCRIPTION
1201	PSB1048PF1201	BRAKE PEDAL SHAFT
1202	PSB1048PF1202	LEFT BRAKE PEDAL
1203	PSB1048PF1203	RIGHT BRAKE PEDAL
1204	PSB1048PF1204	PEDAL SHAFT COLLAR
1205	PCAP01M	CAP SCREW M6-1 X 16
1206	PCAP04M	CAP SCREW M6-1 X 10
1207	PW03M	FLAT WASHER 6MM
1208	PSB1048PF1208	CENTER PANEL
1209	PSB1048PF1209	CHIP DRAWER
1210	PSB1048PF1210	CABINET PANEL BRACKET
1211	PS05M	PHLP HD SCR M5-.8 X 8
1212	PSB1048PF1212	SHAFT CLUTCH COVER
1213	PSB1048PF1213	BRAKE LINKAGE COVER
1214	PSB1048PF1214	BACKSPLASH MOUNTING PLATE
1215	PSB1046PF1214	CHUCK GUARD PIVOT BRACKET
1216	PB56M	CAP SCREW M10-1.5 X 20
1217	PSS14M	SET SCREW M8-1.25 X 12
1218	PN04M	HEX NUT M4-.7
1219	PLW03M	LOCK WASHER 6MM
1220	PCAP02M	CAP SCREW M6-1 X 20
1221	PSB1046PF1220	SAFETY SWITCH BRACKET
1222	PSB1046PF1221	CHUCK GUARD SAFETY SWITCH TZ9212
1223	PS65M	PHLP HD SCR M4-.7 X 40
1224	PN03M	HEX NUT M8-1.25
1225	PW01M	FLAT WASHER 8MM
1226	PCAP14M	CAP SCREW M8-1.25 X 20
1227	PSB1048PF1227	BACKSPLASH
1228	PSB1046PF1227	CHUCK GUARD KNOB 1/2-13
1229	PN06	HEX NUT 1/2-13

REF	PART #	DESCRIPTION
1230	PB52	HEX BOLT 1/2-13 X 1
1231	PSB1046PF1230	CHUCK GUARD PIVOT ROD
1232	PSB1046PF1231	CHUCK SAFETY GUARD
1233	PCAP26M	CAP SCREW M6-1 X 12
1234	PSS34M	SET SCREW M5-.8 X 16
1235	PSB1048PF1235	FLUID TROUGH RIGHT SIDE
1236	PSB1048PF1236	FLUID TROUGH LEFT SIDE
1237	PSB1048PF1237	COOLANT HOSE 3/8" X 185"
1238	PSB1046PF1236	PIPE NIPPLE 3/8 PT X 3/8 PH
1239	PSB1046PF1237	COOLANT PUMP ASSEMBLY
1240	PSB1046PF1238	COOLANT TANK
1241	PSB1046PF1239	COOLANT TANK COVER
1242	PS68M	PHLP HD SCR M6-1 X 10
1243	PSB1048PF1243	RIGHT SIDE SPLASH TRAY
1244	PSB1048PF1244	LEFT SIDE SPLASH TRAY
1245	PSB1046PF1243	MOTOR ACCESS COVER
1246	PSB1048PF1246	BACKSPLASH MOUNTING POST
1247	PSB1046PF1245	CONTROL PANEL PLATE
1248	PSB1048PF1248	LEFT CABINET
1249	PSB1048PF1249	CENTER CABINET
1250	PSB1048PF1250	RIGHT CABINET
1251	PSB1046PF1248	LEVELING FOOT
1252	PB80M	HEX BOLT M16-2 X 55
1253	PSB1046PF1250	CHUCK GUARD WINDOW
1254	PBHS09M	BUTTON HD CAP SCR M6-1 X 12
1255	PCAP01M	CAP SCREW M6-1 X 16
1256	PSB1048PF1256	HEX NUT M6-1 X 16
1257	PSB1046PF1252	END GEAR COVER ASSEMBLY

Brake

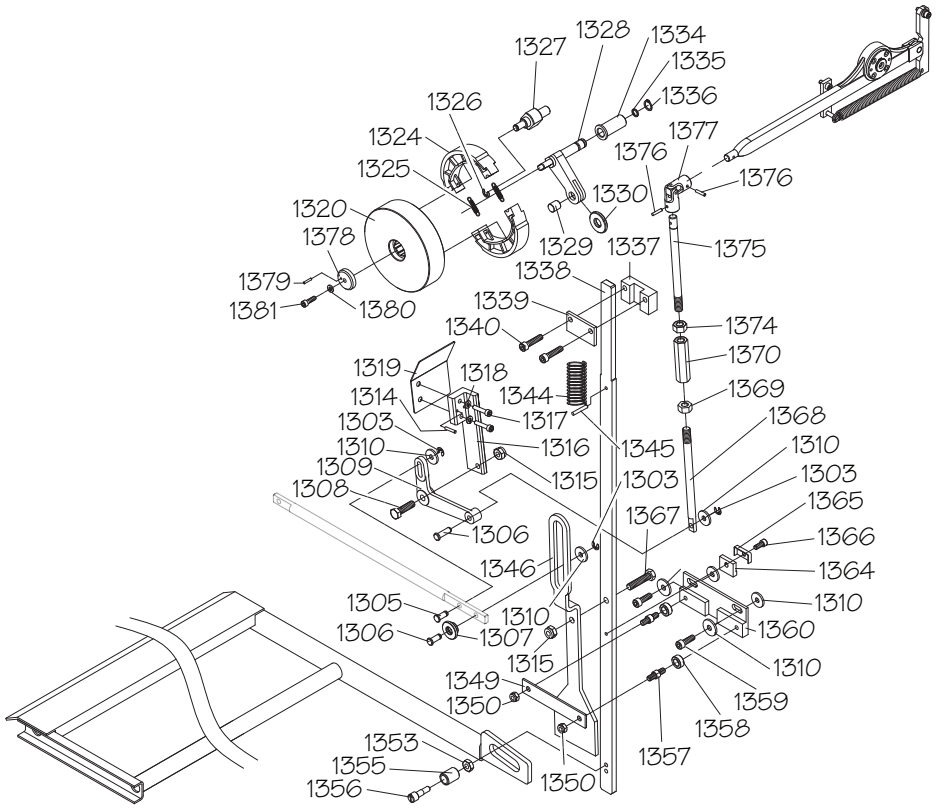

REF	PART #	DESCRIPTION
1303	PEC09M	E-CLIP 6MM
1305	PSB1046PF1305	CLEVIS PIN 6MM
1306	PSB1046PF1305	CLEVIS PIN 6MM
1307	PSB1046PF1307	SPACER
1308	PB01M	HEX BOLT M10-1.5 X 30
1309	PSB1046PF1309	ROCKER ARM
1310	PW01M	FLAT WASHER 8MM
1314	PW01M	FLAT WASHER 8MM
1315	PLN05M	LOCK NUT M10-1.5
1316	PSB1046PF1316	ROCKER ARM MOUNTING BRACKET
1317	PCAP07M	CAP SCREW M6-1 X 30
1318	PLW03M	LOCK WASHER 6MM
1319	PSB1046PF1319	SHIELD PLATE
1320	PSB1046PF1320	BRAKE DRUM
1324	PSB1046PF1324	BRAKE SHOE SET 2PC
1325	PSB1046PF1325	EXTENSION SPRING
1326	PEC015M	E-CLIP 8MM
1327	PSB1046PF1327	BRAKE SHOE ANCHOR PIN
1328	PSB1046PF1328	BRAKE ACTUATOR
1329	PSB1046PF1329	ACTUATOR PIN
1330	PSB1046PF1330	ACTUATOR ROLLER
1334	PSB1046PF1334	ACTUATOR BUSHING
1335	PORP010	O-RING 9.8 X 1.9 P10
1336	PR02M	EXT RETAINING RING 14MM
1337	PSB1046PF1337	MOUNTING BLOCK
1338	PSB1046PF1338	BRAKE ACTUATOR ROD (SB1046PF-48PF)
1338	PSB1056F1338	BRAKE ACTUATOR ROD (SB1056F-58F)
1339	PSB1046PF1339	ROD RETAINING PLATE
1340	PCAP40M	CAP SCREW M8-1.25 X 35

REF	PART #	DESCRIPTION
1344	PSB1046PF1344	EXTENSION SPRING
1345	PSB1046PF1345	SPRING ANCHOR PIN 5 X 30
1346	PSB1046PF1346	SPINDLE LEVER/BRAKE CONTROL ARM
1349	PSB1046PF1349	CONTROL ARM RETAINING PLATE
1350	PLN04M	LOCK NUT M8-1.25
1353	PN03M	HEX NUT M8-1.25
1355	PSB1046PF1355	BRAKE PEDAL PIN
1356	PSB1046PF1356	PEDAL PIN SHOULDER BOLT
1357	PSB1046PF1357	ROLLER STANDOFF
1358	PSB1046PF1358	ROLLER
1359	PCAP31M	CAP SCREW M8-1.25 X 25
1360	PSB1046PF1360	CONTROL ARM BRACKET
1364	PSB1046PF1364	STOP PLATE
1365	PSB1046PF1365	STOP PLATE SHIELD
1366	PCAP04M	CAP SCREW M6-1 X 10
1367	PB116M	HEX BOLT M10-1.5 X 45
1368	PSB1046PF1368	LOWER CLUTCH ACTUATOR ROD (SB1046PF-48PF)
1368	PSB1056F1368	LOWER CLUTCH ACTUATOR ROD (SB1056F-58F)
1369	PSB1046PF1369	ACTUATOR ROD JAM NUT M12-1.75
1370	PSB1046PF1370	ACTUATOR ROD COUPLER M12-1.75
1374	PN09M	HEX NUT M12-1.75
1375	PSB1046PF1375	UPPER CLUTCH ACTUATOR ROD (SB1046PF-48PF)
1375	PSB1056F1375	UPPER CLUTCH ACTUATOR ROD (SB1056F-58F)
1376	PRP39M	ROLL PIN 4 X 20
1377	PSB1046PF1377	UNIVERSAL JOINT ASSEMBLY
1378	PSB1046PF1378	BRAKE DRUM FLAT WASHER
1379	PRP02M	ROLL PIN 3 X 16
1380	PLW03M	LOCK WASHER 6MM
1381	PCAP02M	CAP SCREW M6-1 X 20

Tailstock

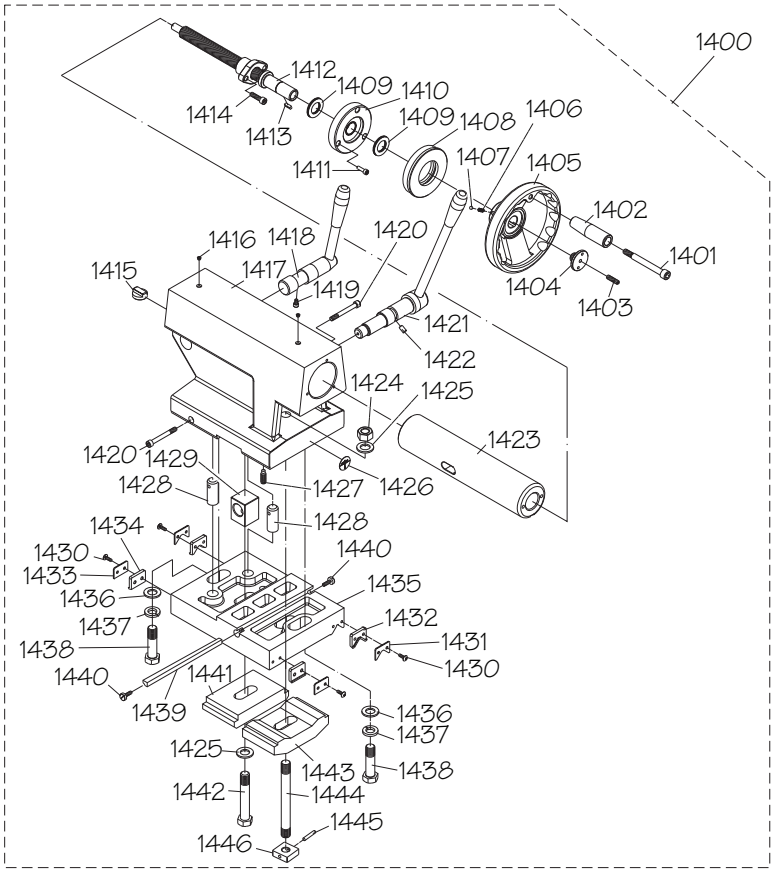

REF	PART #	DESCRIPTION
1400	PSB1046PF1400	TAILSTOCK ASSEMBLY
1401	PSB1046PF1401	HANDWHEEL HANDLE CAP SCREW
1402	PSB1046PF1402	HANDWHEEL HANDLE
1403	PSS19M	SET SCREW M8-1.25 X 30
1404	PSB1046PF1404	HANDWHEEL CENTER CAP
1405	PSB1046PF1405	HANDWHEEL
1406	PSB1046PF1406	COMPRESSION SPRING
1407	PSTB001	STEEL BALL 1/4
1408	PSB1046PF1408	GRADUATED DIAL
1409	PSB1046PF1409	THRUST BEARING 3542AS2
1410	PSB1046PF1410	GRADUATED DIAL BASE
1411	PCAP02M	CAP SCREW M6-1 X 20
1412	PSB1046PF1412	LEADSCREW W/NUT
1413	PK10M	KEY 5 X 5 X 12
1414	PCAP13M	CAP SCREW M8-1.25 X 30
1415	PSB1046PF1415	QUILL ALIGNMENT GUIDE
1416	PLUBE001	TAP-IN BALL OILER 1/4
1417	PSB1046PF1417	TAILSTOCK CASTING
1418	PSB1046PF1418	QUILL LOCK LEVER ASSEMBLY
1419	PCAP04M	CAP SCREW M6-1 X 10
1420	PCAP128M	CAP SCREW M8-1.25 X 70
1421	PSB1046PF1421	TAILSTOCK LOCK LEVER ASSEMBLY
1422	PSB1046PF1422	TAILSTOCK LOCK LEVER PIN
1423	PSB1046PF1423	QUILL

REF	PART #	DESCRIPTION
1424	PN29M	HEX NUT M18-2.5
1425	PW18M	FLAT WASHER 18MM
1426	PSB1046PF1426	OFFSET INDICATOR PLATE
1427	PSS73M	SET SCREW M10-1.5 X 30
1428	PSB1046PF1428	ALIGNMENT PIN
1429	PSB1046PF1429	PIVOT BLOCK
1430	PBHS16M	BUTTON HD CAP SCR M5-.8 X 16
1431	PSB1046PF1431	V-WAY WIPER PLATE
1432	PSB1046PF1432	V-WAY WIPER
1433	PSB1046PF1433	STRAIGHT WAY WIPER PLATE
1434	PSB1046PF1434	STRAIGHT WAY WIPER
1435	PSB1046PF1435	TAILSTOCK BASE (SB1046PF-48PF)
1435	PSB1056F1435	TAILSTOCK BASE (SB1056F-58F)
1436	PW18M	FLAT WASHER 18MM
1437	PLW12M	LOCK WASHER 18MM
1438	PSB1046PF1438	TAILSTOCK ANCHOR BOLT
1439	PSB1046PF1439	TAILSTOCK GIB
1440	PSB1046PF1440	TAILSTOCK GIB ADJUST SCREW
1441	PSB1046PF1441	CLAMP PLATE
1442	PSB1046PF1442	TAILSTOCK MOUNTING BOLT
1443	PSB1046PF1443	CLAMP BLOCK
1444	PSB1046PF1444	TAILSTOCK MOUNTING STUD
1445	PRP31M	ROLL PIN 6 X 36
1446	PSB1046PF1446	SQUARE DRILLED NUT

Thread Dial

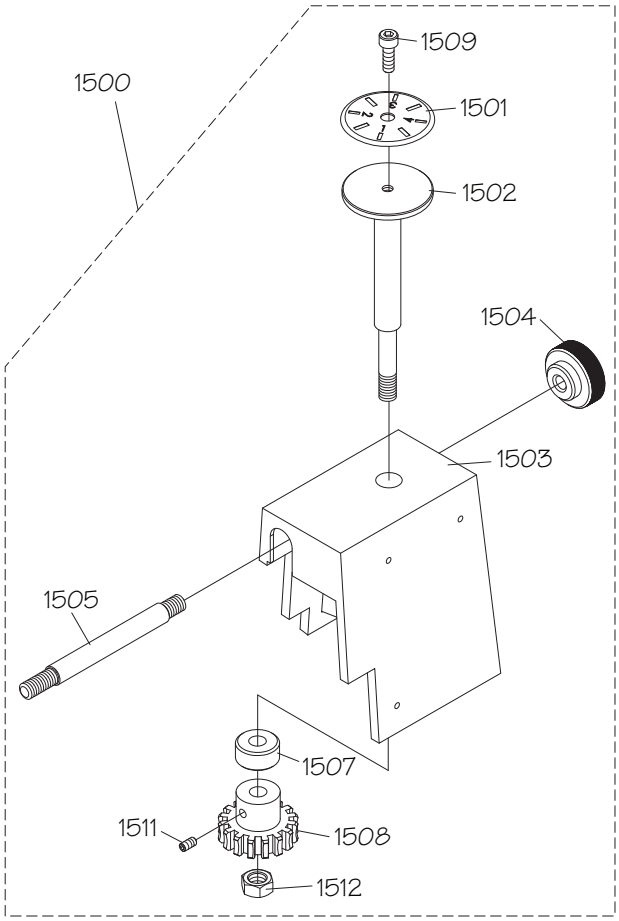

REF	PART #	DESCRIPTION
1500	PSB1046PF1500	THREAD DIAL ASSEMBLY
1501	PSB1046PF1501	DIAL PLATE
1502	PSB1046PF1502	PIVOT BOLT
1503	PSB1046PF1503	DIAL INDICATOR CASTING
1504	PSB1046PF1504	KNURLED KNOB
1505	PSB1046PF1505	PIVOT STUD-DE
1507	PSB1046PF1507	GEAR SPACER
1508	PSB1046PF1508	DIAL GEAR 16T
1509	PCAP04M	CAP SCREW M6-1 X 10
1511	PSS02M	SET SCREW M6-1 X 6
1512	PN03M	HEX NUT M8-1.25

Micrometer Stop

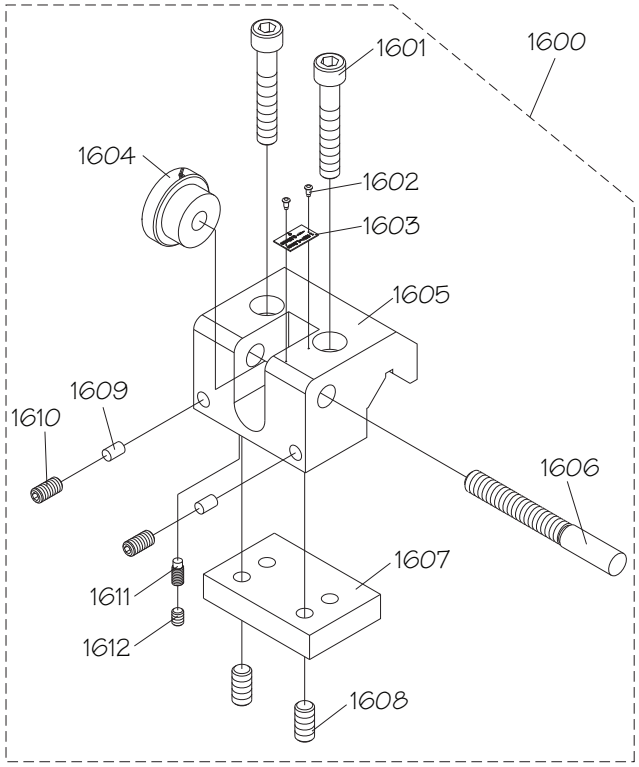

REF	PART #	DESCRIPTION
1600	PSB1046PF1600	MICROMETER STOP ASSEMBLY
1601	PCAP71M	CAP SCREW M10-1.5 X 60
1602	PRIV001M	STEEL FLUTED RIVET 2 X 5MM
1603	PSB1046PF1603	INDICATOR PLATE
1604	PSB1046PF1604	MICROMETER DIAL
1605	PSB1046PF1605	INDICATOR STOP CASTING
1606	PSB1046PF1606	INDICATOR STOP ROD
1607	PSB1046PF1607	CLAMP PLATE
1608	PSS10M	SET SCREW M10-1.5 X 20
1609	PSB1046PF1609	PLUNGER COPPER
1610	PSS06M	SET SCREW M8-1.25 X 16
1611	PSB1046PF1611	DOG POINT SET SCREW M8-1.25 X 12
1612	PSS14M	SET SCREW M8-1.25 X 12

Steady Rest

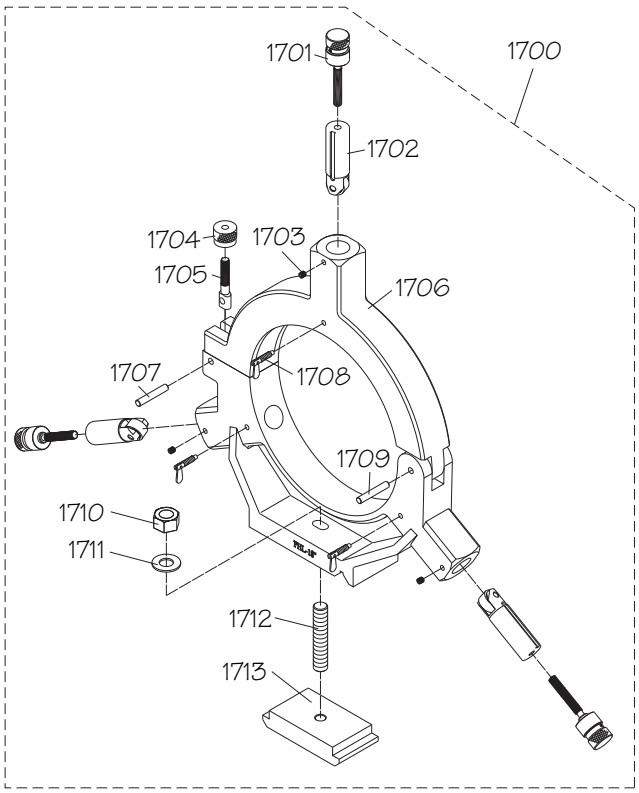

REF	PART #	DESCRIPTION
1700	PSB1046PF1700	STEADY REST ASSEMBLY (SB1046PF-48PF)
1700	PSB1056F1700	STEADY REST ASSEMBLY (SB1056F-58F)
1701	PSB1046PF1701	FINGER ADJUSTMENT KNOB ASSY
1702	PSB1046PF1702	FINGER ASSEMBLY
1703	PSS20M	SET SCREW M8-1.25 X 8
1704	PSB1046PF1704	CLAMP SCREW KNOB
1705	PSB1046PF1705	CLAMP SCREW
1706	PSB1046PF1706	CASTING 2PC (SB1046PF-48PF)
1706	PSB1056F1706	CASTING 2PC (SB1056F-58F)
1707	PSB1046PF1707	DOWEL PIN
1708	PSB1046PF1708	DOG PT LEAF SCREW M8-1.25 X 25
1709	PSB1046PF1709	HINGE PIN
1710	PSB1046PF1710	HEX NUT M18-2.25
1711	PLW12M	LOCK WASHER 18MM
1712	PSB1046PF1712	STUD-FT M18-2.25 X 75
1713	PSB1046PF1713	CLAMP PLATE

Follow Rest

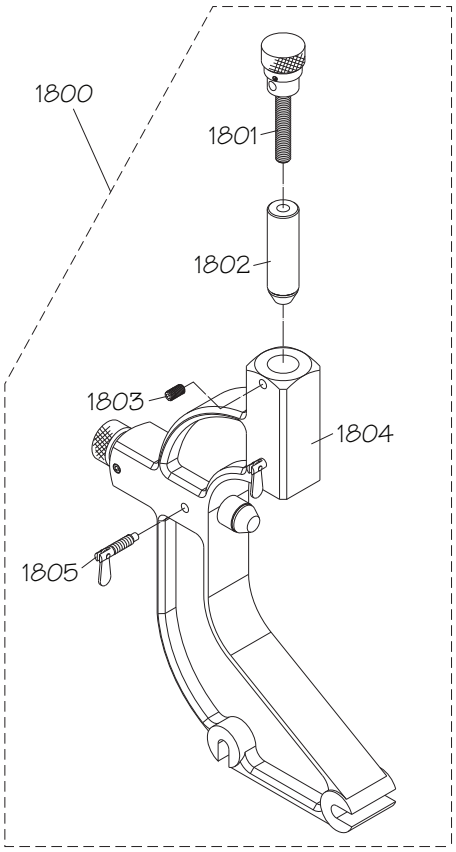

REF	PART #	DESCRIPTION
1800	PSB1046PF1800	FOLLOW REST ASSEMBLY (SB1046PF-48PF)
1800	PSB1056F1800	FOLLOW REST ASSEMBLY (SB1056F-58F)
1801	PSB1046PF1801	ADJUSTMENT KNOB ASSEMBLY
1802	PSB1046PF1802	FINGER ASSEMBLY
1803	PSS06M	SET SCREW M8-1.25 X 16
1804	PSB1046PF1804	FOLLOW REST CASTING (SB1046PF-48PF)
1804	PSB1056F1804	FOLLOW REST CASTING (SB1056F-58F)
1805	PSB1046PF1708	DOG PT LEAF SCREW M8-1.25 X 25

Electrical Cabinet & Control Panel

Electrical Cabinet

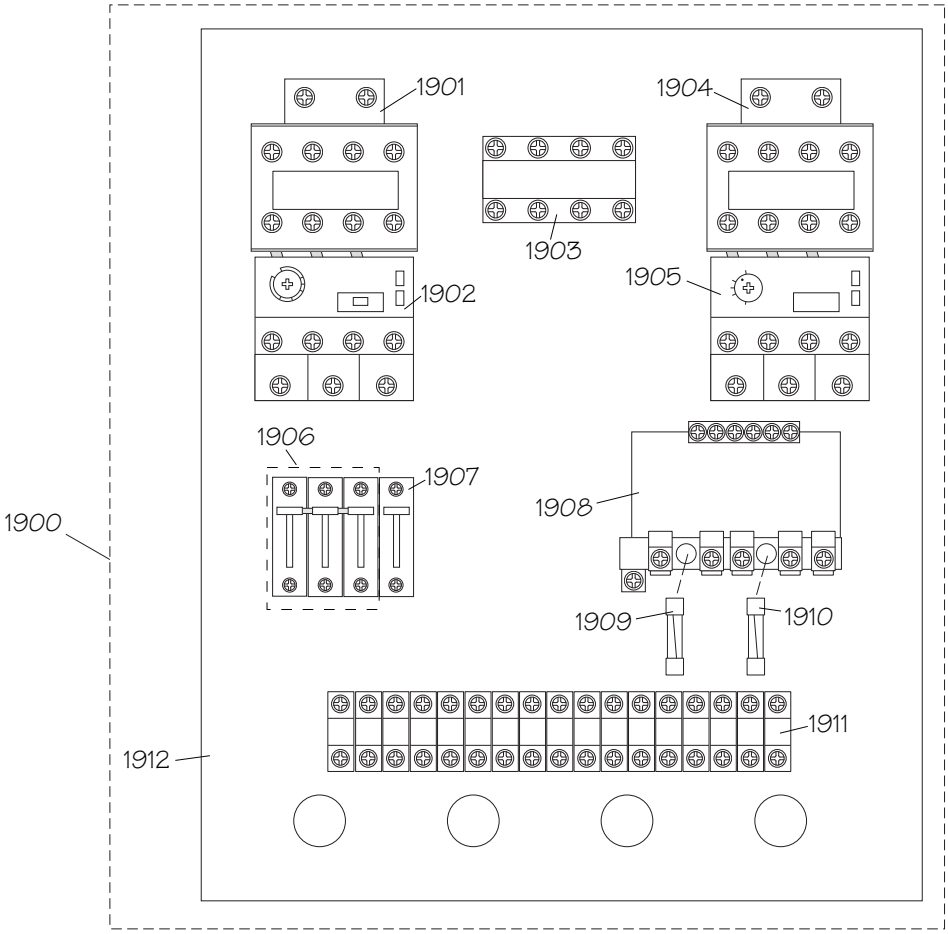

Control Panel (viewed from behind)

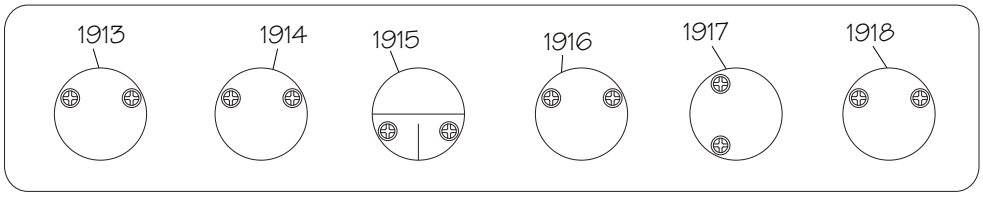

REF	PART #	DESCRIPTION
1900	PSB1046PF1900	ELECTRICAL CABINET ASSEMBLY
1901	PSB1046PF1901	CONTACTOR AB C23400
1902	PSB1046PF1902	OL RELAY AB 21-25A
1903	PSB1046PF1903	MASTER POWER SWITCH
1904	PSB1046PF1904	CONTACTOR AB C09400
1905	PSB1046PF1905	OL RELAY AB .25-.4A
1906	PSB1046PF1906	CIRCUIT BREAKER 1492SP 25A
1907	PSB1046PF1907	CIRCUIT BREAKER 1492SP 6A
1908	PSB1046PF1908	TRANSFORMER SUEN LIANG SP-TBSW
1909	PSB1046PF1909	FUSE 4A 250V TIME-DELAY

REF	PART #	DESCRIPTION
1910	PSB1046PF1910	FUSE 500M 250V TIME-DELAY
1911	PSB1046PF1911	TERMINAL BAR 17P
1912	PSB1046PF1912	ELECTRICAL PANEL BACK PLATE
1913	PSB1046PF1913	STOP BUTTON
1914	PSB1046PF1914	MOTOR ON BUTTON
1915	PSB1046PF1915	MOTOR OFF BUTTON
1916	PSB1046PF1916	COOLANT PUMP ON BUTTON
1917	PSB1046PF1917	COOLANT PUMP OFF BUTTON
1918	PSB1046PF1918	POWER LAMP

Accessories

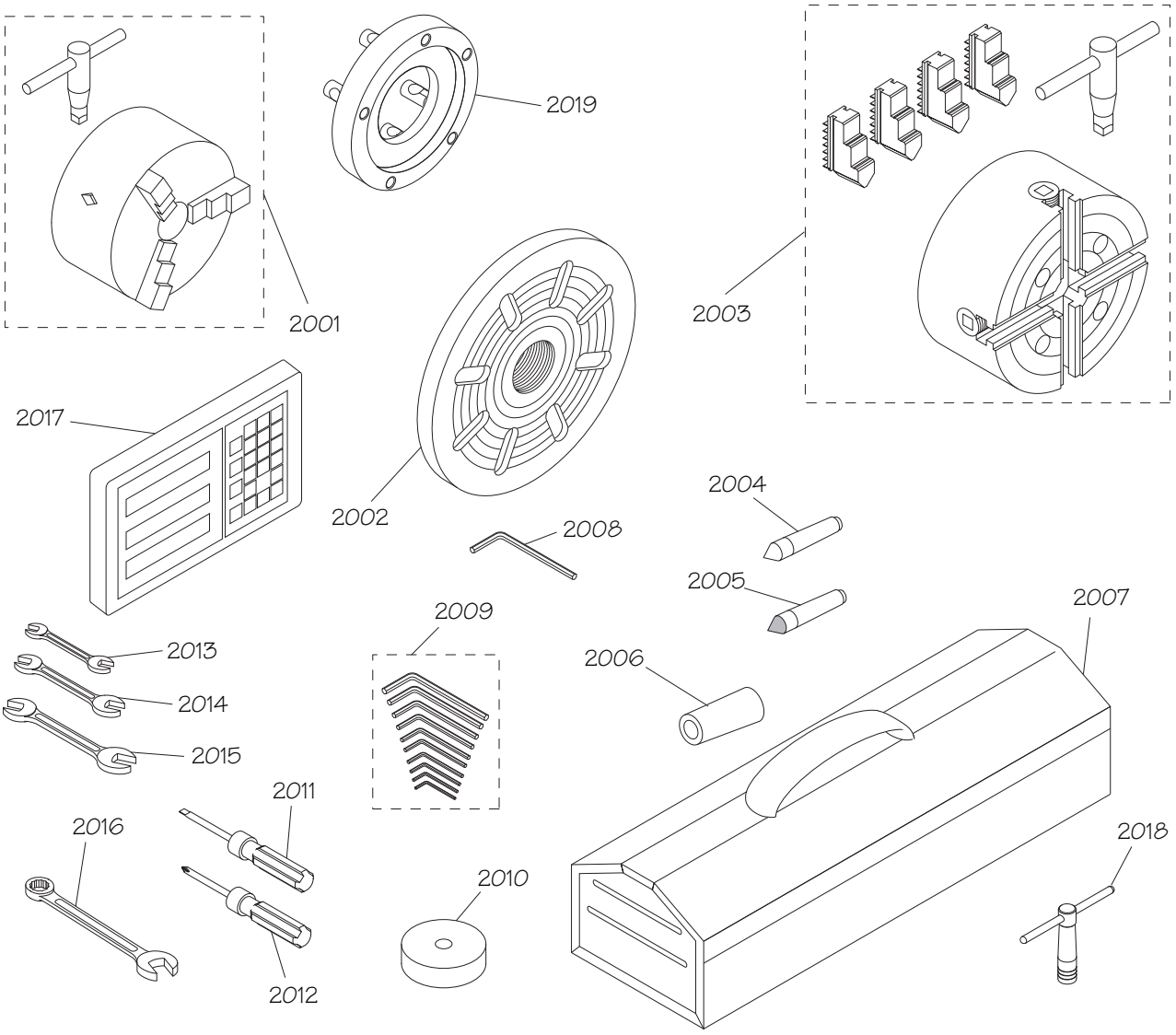

REF	PART #	DESCRIPTION
2001	SB1312	3-JAW CHUCK 12"
2002	PSB1042PF1802	FACEPLATE ASSEMBLY 14"
2003	SB1232	4-JAW CHUCK 14"
2004	PSB1042PF1804	DEAD CENTER MT#5
2005	PSB1042PF1805	DEAD CENTER CARBIDE-TIPPED MT#5
2006	PSB1042PF1806	SPINDLE SLEEVE MT#7-MT#5
2007	PSB1042PF1807	TOOL BOX
2008	PAW10M	HEX WRENCH 10MM
2009	PAW1510M	HEX WRENCH SET 1.5-10MM
2010	PSB10531710	FOOT CAST-IRON

REF	PART #	DESCRIPTION
2011	PSDF2	STANDARD SCREWDRIVER #2
2012	PSDP2	PHILLIPS SCREWDRIVER #2
2013	PWR1012	WRENCH 10/12MM
2014	PWR1417	WRENCH 14/17MM
2015	PWR2224	WRENCH 22/24MM
2016	PWR27	COMBO WRENCH 27MM
2017	PSB10531717	DRO ASSEMBLY FAGOR 20I-T 2-AXIS
2018	PSB1042PF1818	4-WAY TOOL POST WRENCH
2019	SB1404	3-JAW CHUCK D1-8 BACK PLATE 12-1/2"

Front Machine Labels

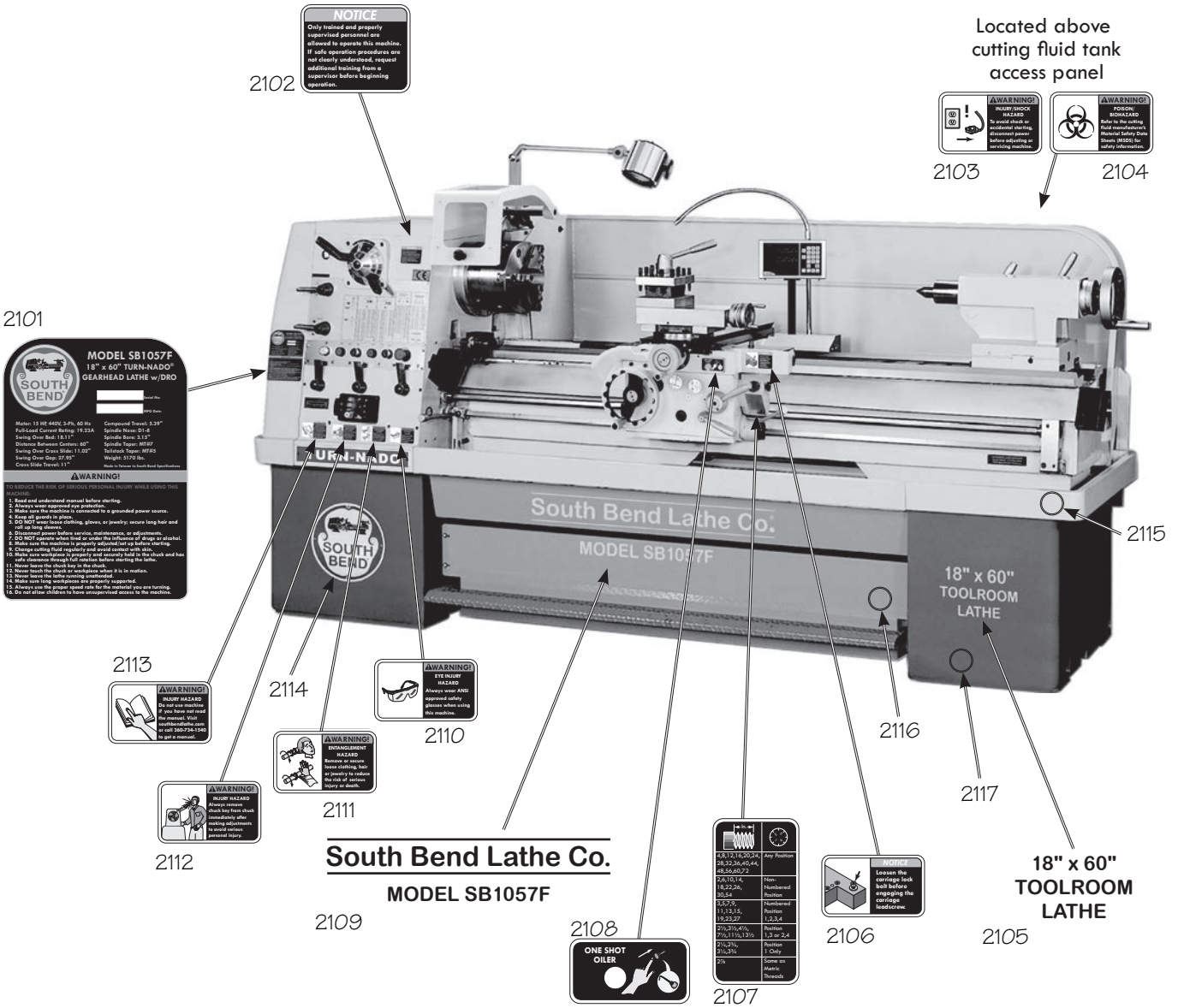

REF	PART #	DESCRIPTION
2101	PSB1046PF2101	MACHINE ID LABEL (SB1046PF)
2101	PSB1047F2101	MACHINE ID LABEL (SB1047F)
2101	PSB1048PF2101	MACHINE ID LABEL (SB1048PF)
2101	PSB1056F2101	MACHINE ID LABEL (SB1056F)
2101	PSB1057F2101	MACHINE ID LABEL (SB1057F)
2101	PSB1058F2101	MACHINE ID LABEL (SB1058F)
2102	PSB1048PF2102	UNTRAINED PERSONNEL LABEL
2103	PSBLABEL02HL	DISCONNECT POWER LABEL HL
2104	PSBLABEL06HL	BIOHAZARD LABEL HL
2105	PSB1046PF2105	TOOLROOM SIZE LABEL (SB1046PF)
2105	PSB1047F2105	TOOLROOM SIZE LABEL (SB1047F)
2105	PSB1048PF2105	TOOLROOM SIZE LABEL (SB1048PF)
2105	PSB1056F2105	TOOLROOM SIZE LABEL (SB1056F)
2105	PSB1057F2105	TOOLROOM SIZE LABEL (SB1057F)
2105	PSB1058F2105	TOOLROOM SIZE LABEL (SB1058F)
2106	PSB1048PF2106	CARRIAGE LOCK LABEL

REF	PART #	DESCRIPTION
2107	PSB1048PF2107	THREAD CHART
2108	PSB1048PF2108	ONE SHOT OILER LABEL
2109	PSB1046PF2109	MODEL NUMBER LABEL (SB1046PF)
2109	PSB1047F2109	MODEL NUMBER LABEL (SB1047F)
2109	PSB1048PF2109	MODEL NUMBER LABEL (SB1048PF)
2109	PSB1056F2109	MODEL NUMBER LABEL (SB1056F)
2109	PSB1057F2109	MODEL NUMBER LABEL (SB1057F)
2109	PSB1058F2109	MODEL NUMBER LABEL (SB1058F)
2110	PSBLABEL04HL	SAFETY GLASSES LABEL HL
2111	PSBLABEL08HL	ENTANGLEMENT HAZARD LABEL
2112	PSB1048PF2112	CHUCK KEY LABEL
2113	PSBLABEL01HL	READ MANUAL LABEL HL
2114	SB1322	SOUTH BEND NAMEPLATE
2115	PSBPAINT01	SB GRAY TOUCH-UP PAINT
2116	PSBPAINT02	SB LIGHT BLUE TOUCH-UP PAINT
2117	PSBPAINT03	SB DARK BLUE TOUCH-UP PAINT

Rear Machine Labels

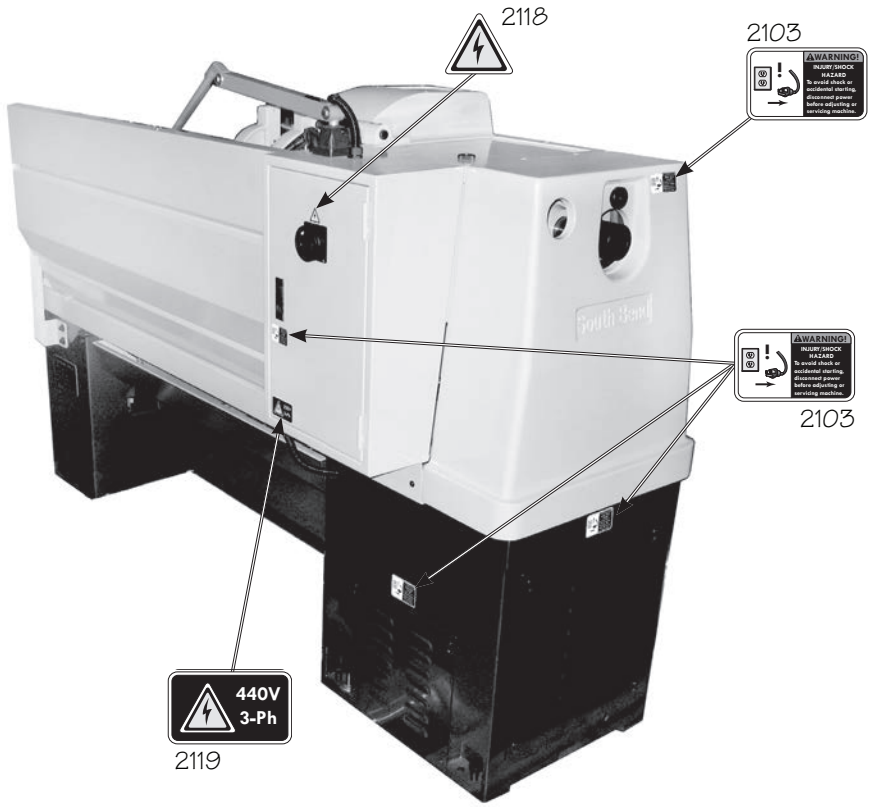

REF	PART #	DESCRIPTION
2103	PSBLABEL02HL	DISCONNECT POWER LABEL HL
2118	PSBLABEL15L	ELECTRICITY LABEL

REF	PART #	DESCRIPTION
2119	PSB1048PF2119	440V 3-PHASE LABEL

⚠WARNING

The safety labels provided with your machine are used to make the operator aware of the machine hazards and ways to prevent injury. The owner of this machine MUST maintain the original location and readability of these safety labels. If any label is removed or becomes unreadable, REPLACE that label before using the machine again. Contact South Bend Lathe Co. at (360) 734-1540 or www.southbendlathe.com to order new labels.

Warranty

This quality product is warranted by South Bend Lathe Company to the original buyer for one year from the date of purchase. This warranty does not apply to consumable parts, or defects due to any kind of misuse, abuse, negligence, accidents, repairs, alterations or lack of maintenance. We do not reimburse for third party repairs. In no event shall we be liable for death, injuries to persons or property, or for incidental, contingent, special or consequential damages arising from the use of our products.

We do not warrant or represent that this machine complies with the provisions of any law, act, code, regulation, or standard of any domestic or foreign government, industry, or authority. In no event shall South Bend's liability under this warranty exceed the original purchase price paid for this machine. Any legal actions brought against South Bend Lathe Company shall be tried in the State of Washington, County of Whatcom.

This is the sole written warranty for this machine. Any and all warranties that may be implied by law, including any merchantability or fitness, for any purpose, are hereby limited to the duration of this warranty. To take advantage of this warranty, contact us by mail or phone to give us the details of the problem you are having.

Thank you for your business and continued support.

SOUTH BEND®

southbendlathe.com

Printed In U.S.A.

#BLTS14126