MODEL T10127
12" SPIRAL CUTTERHEAD
INSTRUCTIONS

The Model T10127 indexable insert spiral cutterhead is designed to replace the straight-knife cutterhead from the Grizzly jointer Model G0609.

The total procedure of changing the cutterhead and setting up the jointer takes several hours. The job consists of removing the old cutterhead, installing the new spiral cutterhead, and readjusting the outfeed table even with the carbide inserts at TDC (top dead center). *Call Technical Support at (570) 546-9663 if you need help.*

⚠WARNING

The T10127 spiral cutterhead is only designed to be used with the Grizzly Model G0609 jointer. Do NOT install this cutterhead in any other jointer model or make. Doing so could result in property damage or serious personal injury.

Recommended Tools

Hex Wrench 3, 4, 8mm ..... 1 EA
Wrench/Socket 10, 14, 19mm..... 1 EA
Phillip Head Screwdriver 1
Lifting Assistants 2
Standard Screwdriver..... 1
Precision Straightedge (**Figure 1**)..... 1
Feeler Gauge Set..... 1
Pair of Heavy Leather Gloves 1
Safety Glasses (per person)..... 1
Pulley Puller..... 1
Arbor Press 18" Working Height..... 1
Metal Rod ¾" Diameter..... 1
Metal Plates 4" x 9 x ½"..... 2
Hammer..... 1
Wood Blocks 24" 4x4..... 2
Wood Blocks 12" 2x4 2
Flat Piece of Scrap Wood 1
Degreaser..... As Needed
Shop Rag 1

G9644—12" Precision Straightedge
H2675—16" Precision Straightedge
Is your straightedge really straight? These grade 00 heavy-duty stainless steel straightedges are manufactured to DIN874 standards for professional results in setup and inspection work.

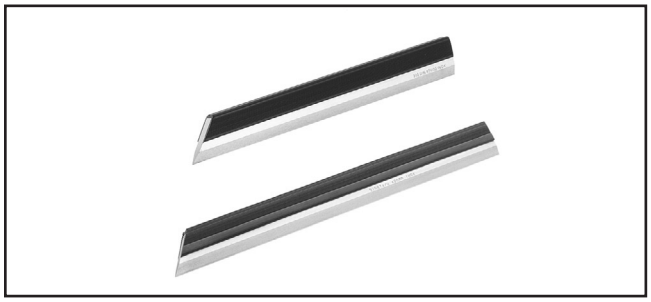

Figure 1. Precision straightedges.

Inventory (**Figure 2**)

A. Spiral Cutterhead 1
B. Torx Drivers T20 2
C. Torx L-Wrenches T20 (not shown) 2
D. Indexable Carbide Inserts 14 x 14 x 2 3
E. Flat Head Torx Screws T20 M6-1 x 15 3

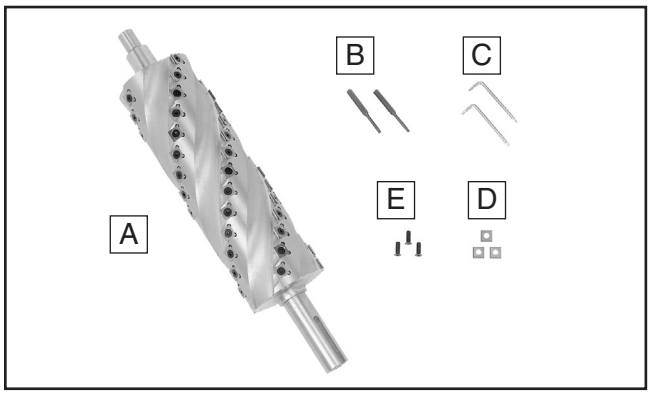

Figure 2. Spiral cutterhead inventory.

COPYRIGHT © AUGUST, 2008 BY GRIZZLY INDUSTRIAL, INC. REVISED JULY, 2009 (BL)
WARNING: NO PORTION OF THIS MANUAL MAY BE REPRODUCED IN ANY SHAPE OR FORM WITHOUT THE WRITTEN APPROVAL OF GRIZZLY INDUSTRIAL, INC.
#BL11024 PRINTED IN CHINA

Removing G0609 Cutterhead

1. DISCONNECT JOINTER FROM POWER!

2. Remove the cutterhead guard and rabbet extension table.

3. Remove the lock nut securing the fence carriage, then remove the fence assembly.

4. Remove the fence bracket, then remove both side access panels.

5. Open the motor access cover, loosen the fasteners on the tension rod, lift the motor up, then remove the V-belts.

6. Remove the knives.

   —If you have difficulty accessing the knives, loosen the infeed and outfeed table locks, loosen the jam nuts and positive stop bolts located at the back of the machine, then lower the beds farther, as shown in **Figure 3**.

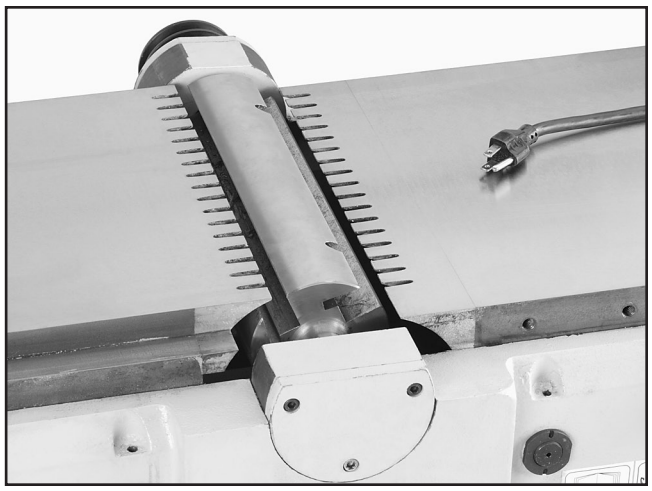

Figure 3. Example of jointer disassembly **Steps 1–6**.

⚠WARNING

Jointer knives are extremely sharp. You must remove the jointer knives to avoid the risk of serious personal injury during the following steps.

7. Raise both beds all the way up, then tighten the infeed and outfeed table locks. This bed position will make future steps easier while replacing the cutterhead.

8. Remove the hex nuts and flat washers that secure the handwheels, then remove both handwheels.

9. On the left side of the jointer (facing front of the machine), remove the three Phillips head screws that secure the bearing support plate to the cabinet (**Figure 4**).

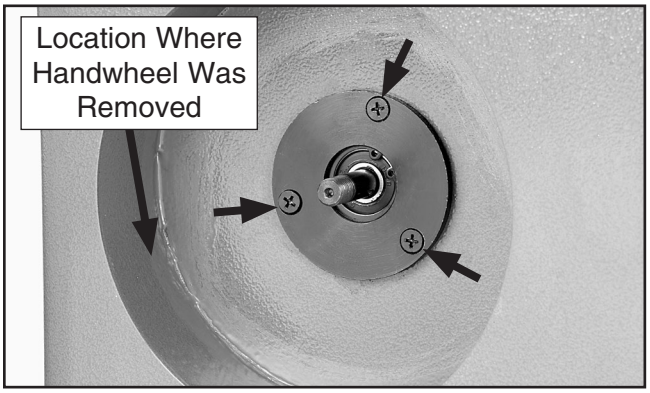

Figure 4. Bearing support plate screws.

10. Loosen the set screw that secures the collar on the spiral gear shaft behind the P-housing (**Figure 5**).

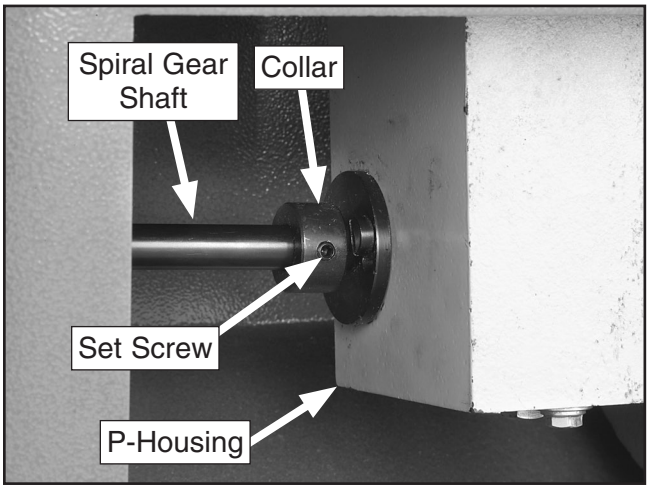

Figure 5. Collar on spiral gear shaft.

11. Slide out the spiral gear shaft assembly (**Figure 6**) through the front of the cabinet.

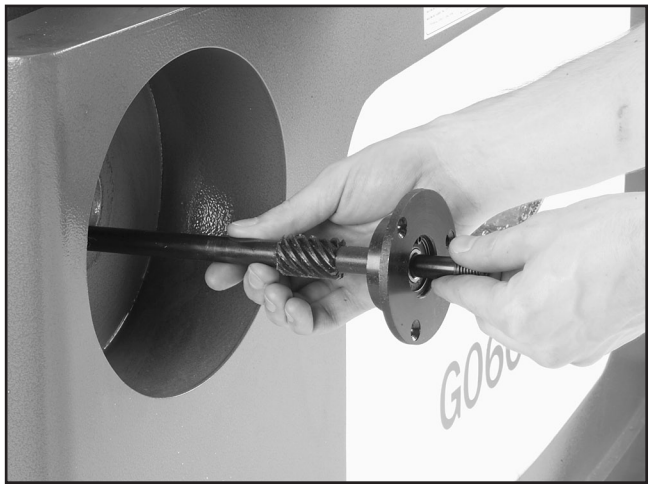

Figure 6. Removing spiral gear shaft.

12. Repeat **Steps 9-11** on the right side of the jointer.

13. Remove the M8-1.25 x 25 cap screws and lock washers securing the stand to the base.

14. During the following steps, you will lift the base off of the cabinet to access the cutterhead, so it can be removed. This can be accomplished using power lifting equipment or by using boards.

—If you have a forklift, engine hoist or boom crane, wrap lifting straps with a 900 lb. capacity around the infeed and outfeed tables. Position the straps as close to the base as possible to prevent damaging the tables. With the lifting straps positioned evenly, lift the jointer off of the cabinet four inches. Proceed to **Step 15**.

—If you do not have power lifting equipment, follow **Steps 15–17.**

15. While two assistants lift the infeed table, place a 24" long 4x4 board (or two 2x4s nailed together) between the cabinet and bed, as shown in **Figure 7**.

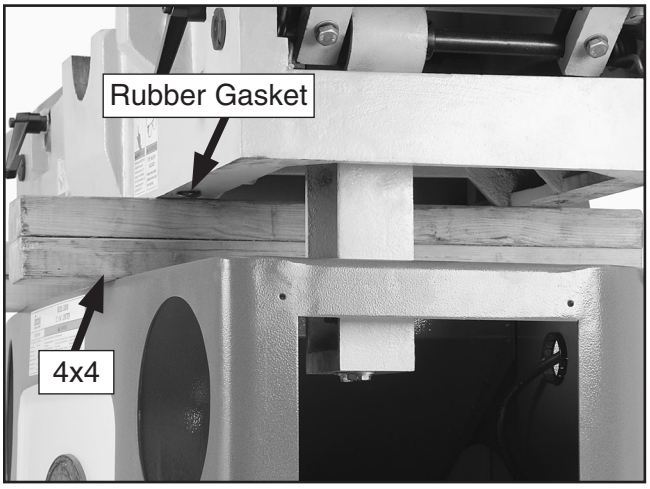

Figure 7. 4x4 placed between cabinet and bed on infeed side of jointer.

Note: *Be careful not to knock off the rubber gaskets (**Figure 7**) located on the bottom of the base. If you accidentally knock the gaskets loose, place them in a safe location for later reinstallation.*

16. Repeat **Step 15** on the other side to support the outfeed table (**Figure 8**).

Figure 8. Jointer bed supported with 4x4s on both ends.

17. Reach inside the base and remove the hex bolts and lock washers that secure the cutterhead to the base (see **Figure 9**).

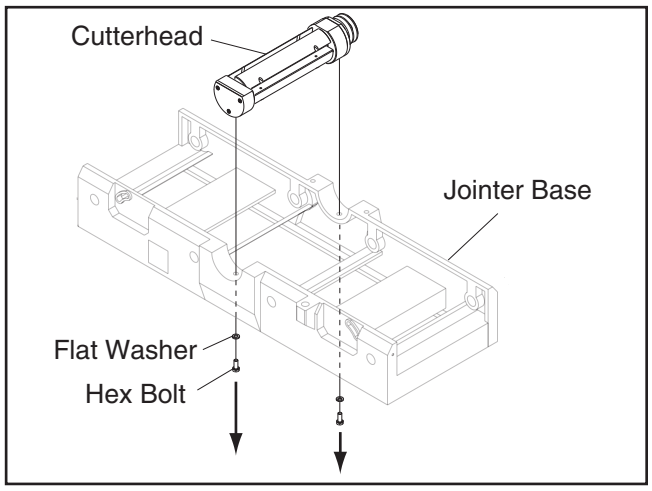

Figure 9. Removing cutterhead fasteners.

18. Mark the side of the front bearing block that faces the front of the machine (**Figure 10**) with tape or a felt marker, to make it easier to reinstall the bearing blocks later.

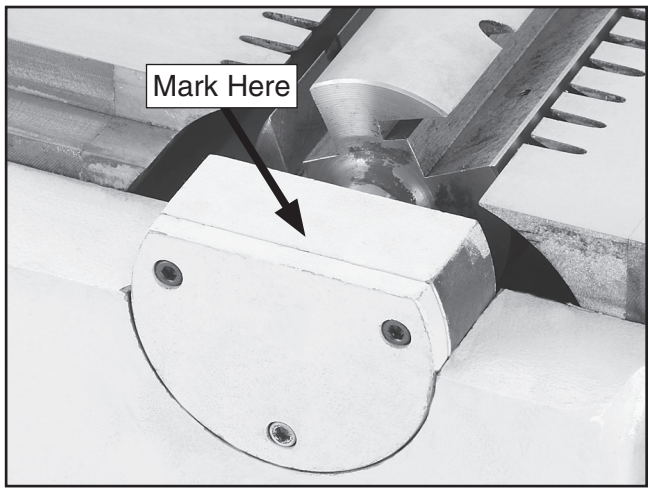

Figure 10. Location to mark front bearing block.

19. Carefully slide the cutterhead assembly out the back of the jointer (see **Figure 11**).

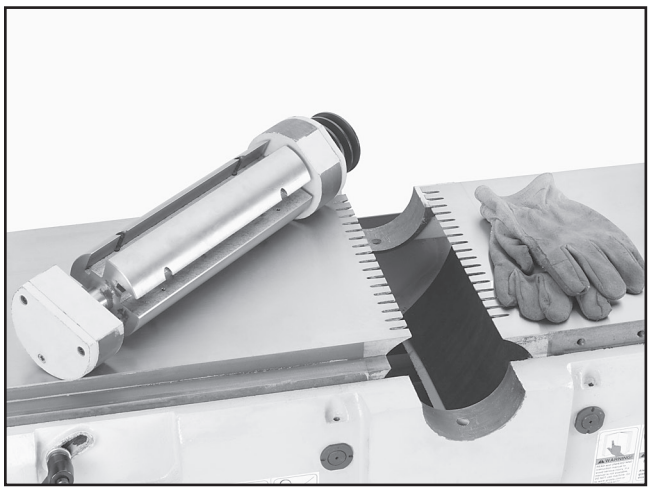

Figure 11. Example of cutterhead removed.

20. Place the cutterhead on a work bench.

21. Remove the left-hand thread hex bolt and flat washer that secure the pulley, use a pulley puller to remove the pulley from the cutterhead **Figure 12**, then remove the key.

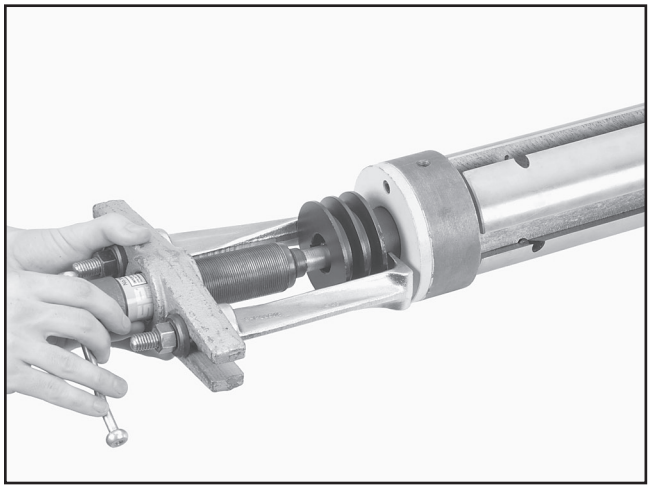

Figure 12. Removing pulley.

22. Place the cutterhead in an arbor press. Insert a metal rod between the press and the cutterhead shaft, and place metal plates between the cutterhead and rear bearing block, as shown in **Figure 13**, to support it.

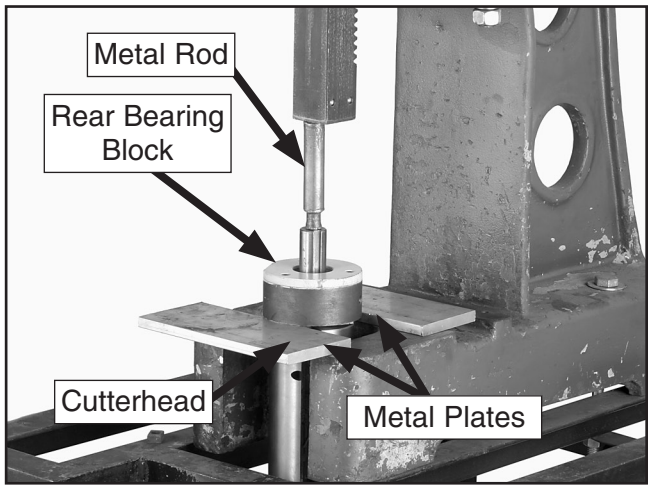

Figure 13. Preparing to remove rear bearing block.

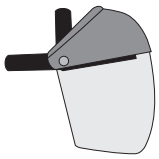

⚠WARNING

Wear a face shield during the next step!

23. Have an assistant hold the cutterhead so it does not suddenly drop, then press the cutterhead shaft off of the rear bearing block.

24. Remove the three cap screws that secure the front bearing block cap, then remove the cap with a standard screwdriver.

25. Remove the hex bolt and flat washer that secure the bearing on the cutterhead.

26. Repeat **Steps 22–23** in a similar manner to remove the cutterhead from the front bearing block and bearing. **Figure 14** shows the disassembled components.

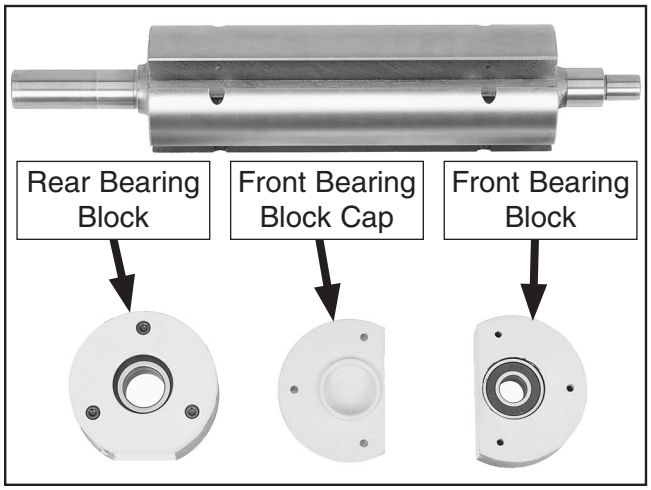

Figure 14. Disassembled cutterhead assembly.

Installing T10127 Cutterhead

1. Remove the protective waxy oil coating from the T10127 cutterhead with a solvent cleaner or degreaser, such as the one shown in **Accessories** on **Page 9**. Avoid chorine-based solvents, such as acetone or brake parts cleaner that may damage painted surfaces. Always follow the manufacturer's instructions when using any type of cleaning product.

⚠WARNING

Jointer carbide inserts are extremely sharp. Wear leather gloves to avoid the risk of serious personal injury during the following steps.

2. Slide the rear bearing block as far as possible onto the longer length of the cutterhead shaft, as shown in **Figure 15**.

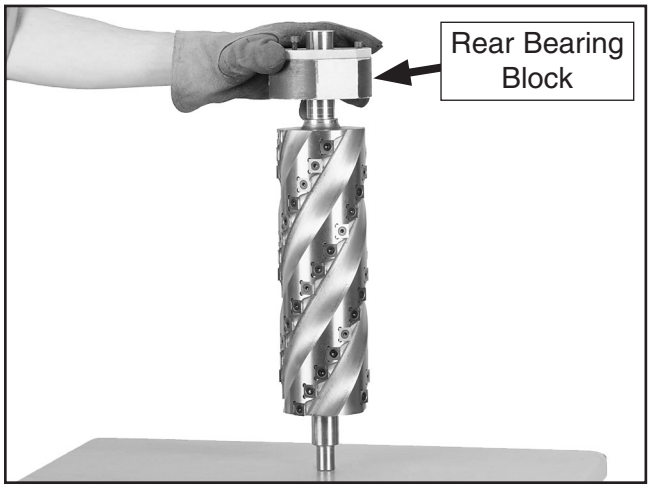

Figure 15. Reinstalling rear bearing block assembly.

3. Stand the cutterhead upright between two 8" 2x4 blocks, rear bearing block side down, and use a hammer and a wood block to seat the cutterhead into the rear bearing block, as shown in **Figure 16**. Tap the wood block on the cutterhead until it meets resistance.

   Note: *You can also use an arbor press to reinstall the rear bearing block.*

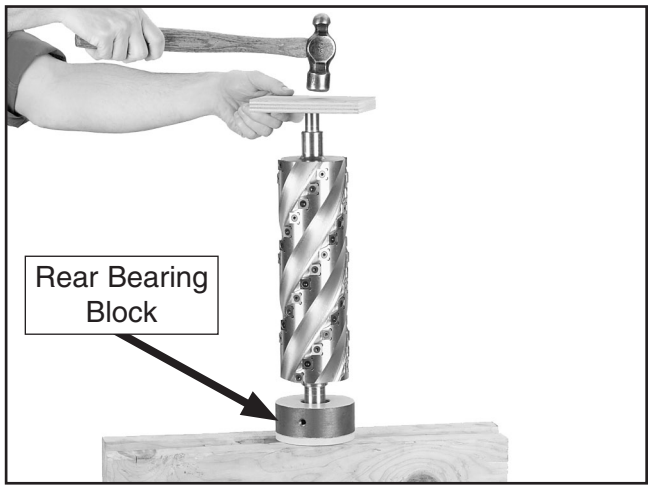

Figure 16. Seating rear bearing block.

4. Use a hammer and a scrap piece of wood to seat the front bearing block onto the cutterhead shaft, as shown in **Figure 17**. Tap the front bearing block until it meets resistance.

   Note: *You can also use an arbor press to reinstall the front bearing block.*

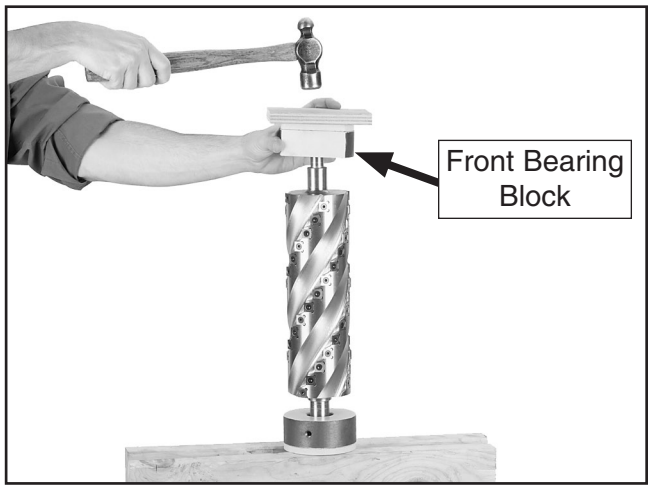

Figure 17. Reinstalling front bearing block.

5. Secure the front bearing block with the hex bolt and flat washer removed in **Step 25** on **Page 5**, then reinstall the cap with the three cap screws**.**

6. Place the cutterhead on a bench, slide the key into the keyway, push the pulley onto the cutterhead shaft, then secure the pulley with the left-hand thread hex bolt and flat washer removed in **Step 21** on **Page 4**.

7. With a rag, wipe down the part of the casting where the bearing blocks will rest to remove sawdust.

8. Move the cutterhead to the jointer. Using the mark from **Step 18**, install the cutterhead so the front bearing block is positioned at the front of the machine (see **Figure 18**). Be careful not to chip the carbide inserts on the jointer beds.

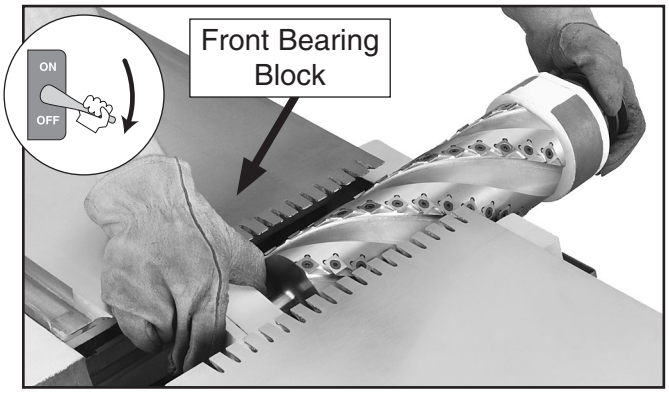

Figure 18. Installing spiral cutterhead.

9. Secure the cutterhead assembly bearing blocks to the casting with the hex bolts and lock washers removed in **Step 17** in the **Assembly** section on **Page 4**, as shown in **Figure 19**.

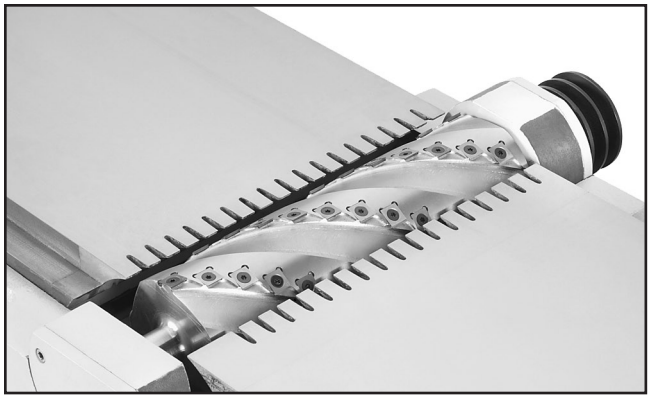

Figure 19. T10127 spiral cutterhead installed.

10. Reinstall any gaskets that were knocked off earlier onto the bottom of the base.

11. Place the base back onto the cabinet, using power lifting equipment or with two lifting assistants.

—If you used power lifting equipment to raise the bed off of the cabinet to remove the Model G0609 cutterhead, make sure the 900 lb. capacity straps are wrapped correctly around the infeed and outfeed tables, remove the 4x4 boards, then lower the bed onto the cabinet.

—If you did not use power lifting equipment but only placed boards between the base and cabinet, have two lifting assistants carefully lower each side of the base onto the cabinet while you remove the 4x4 boards between the cabinet and beds.

12. Repeat **Steps 8–12** in the **Assembly** section on **Pages 2–3** in reverse order—to reinstall the spiral gear shafts and handwheel assemblies.

13. Raise the outfeed table up as far as possible.

14. Using the straightedge and feeler gauge set, inspect the cutterhead parallelism with the outfeed table as shown in **Figure 20**. With the straightedge in position, raise or lower the outfeed table until the cutterhead body (not the carbide insert) just touches the straightedge.

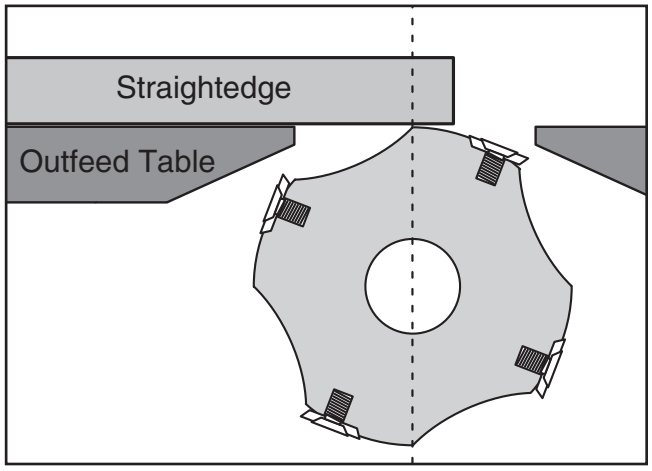

Figure 20. Checking cutterhead parallelism.

15. Move the straightedge to the other side to determine if one end of the cutterhead body is higher/lower than the other. (Place the feeler gauge between the cutterhead body and the straightedge to determine the height difference.)

—If the cutterhead is even or within 0.004" of the outfeed table from one side to the other, skip to **Step 16**.

—If the cutterhead is over 0.004" from one side to the other, follow the instructions in your G0609 manual on **Pages 38-39** for checking infeed table parallelism and adjusting table parallelism. Once the tables are parallel to the cutterhead, proceed to **Step 16**.

16. Secure the base to the stand with the M8-1.25 x 25 cap screws and lock washers removed earlier.

17. Reinstall the V-belts on the pulleys. (Refer to the instructions in your jointer manual for details.)

18. Place a straightedge on the outfeed table so it extends over the cutterhead, and rotate the cutterhead pulley until one of the carbide inserts is at top-dead-center (TDC), as shown in **Figures 21 & 22**.

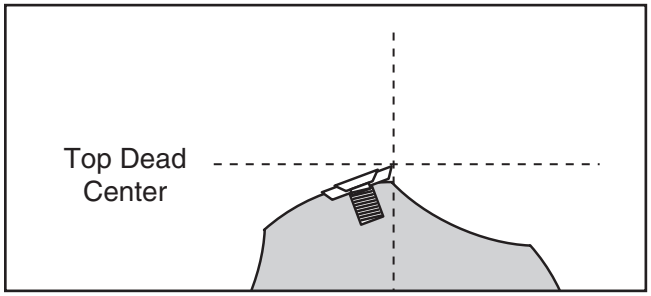

Figure 21. Cutterhead insert at top-dead-center.

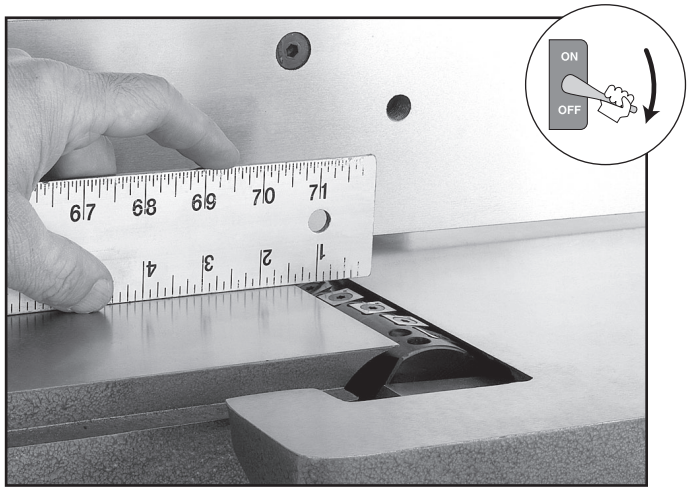

Figure 22. Setting outfeed table height.

When correctly set, the carbide insert will just touch the straightedge at its highest point of rotation and move it slightly ⅛" forward or backward when you rotate the cutterhead pulley (see **Figure 23**).

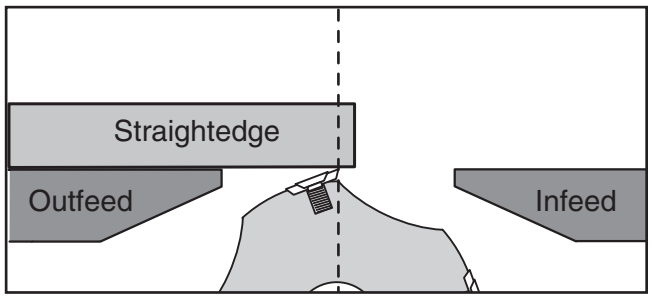

Figure 23. Using a straightedge to align outfeed table height with insert at TDC.

—If your outfeed table is correctly set, no adjustments are necessary.

—If the insert lifts the straightedge off the table and moves it more than ⅛" when you rotate the cutterhead pulley, or the table is below the straightedge, adjust the outfeed table height with the outfeed table handwheel until the straightedge just touches an insert at its highest point of rotation.

19. Lock the outfeed table lock, then reinstall the fence bracket and the fence assembly, then secure the fence carriage with the lock nut.

20. Reinstall the rabbet extension table.

21. Reinstall the cutterhead guard back over the cutterhead, making sure that the spring tension in the guard is properly set so the guard springs back over the cutterhead when it is pulled back and released.

22. Re-adjust the infeed table.

23. Reset the positive stop bolts on the infeed and outfeed tables.

24. Reinstall the motor cover and side access panels.

Insert Service

The Model T10127 12" cutterhead is equipped with 60 indexable carbide inserts. Each insert can be rotated to reveal any one of its four cutting edges. Therefore, if one cutting edge becomes dull or damaged, simply rotate it clockwise 90˚ to reveal a fresh cutting edge (**Figure 24**).

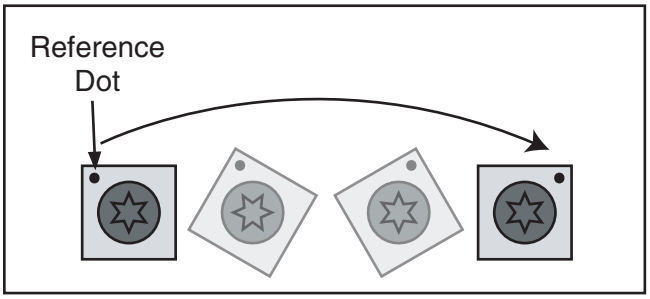

Figure 24. Rotating indexable carbide inserts.

In addition, each insert has a reference dot on one corner. As the insert is rotated, the reference dot location can be used as an indicator of which edges are used and which are new. The insert must be replaced when all four edges are dull.

To Install or adjust a carbide cutter:

1. DISCONNECT JOINTER FROM POWER!

2. Remove any sawdust from the head of the carbide insert Torx screw.

3. Remove the Torx screw and carbide insert.

4. Clean all dust and dirt off the insert and the cutterhead pocket from which the insert was removed, and replace the insert so a fresh, sharp edge is facing outward.

   Note: *Proper cleaning is critical to achieving a smooth finish. Dirt or dust trapped between the insert and cutterhead will slightly raise the insert, and make noticeable marks on your workpieces the next time you cut.*

5. Lubricate the Torx screw threads with a light machine oil, wipe the excess oil off the threads, and torque the Torx screw to 48-50 inch/pounds.

   Note: *Excess oil may squeeze between the insert and cutterhead or in the screw hole, thereby lifting the insert or screw slightly and affecting workpiece finishes.*

Accessories

G8995—4" Heavy Duty Pulley Puller
Indispensable for pulling gears or pulley off of press-fit shafts. Can be used in either a 2 or 3 jaw configuration. The 4" jaw fingers are also reversible so they can grab an outside or inside diameter. The forcing screw has a live center and is made of tough hardened steel. Keep one of these handy in your tool box.

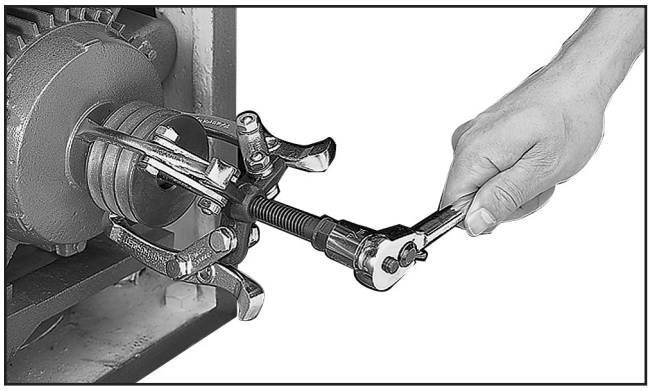

Figure 25. G8995 4" Heavy Duty Pulley Puller.

T21348—10 Pack of Indexable Carbide Inserts
Replacement carbide inserts for T10127 cutterhead.

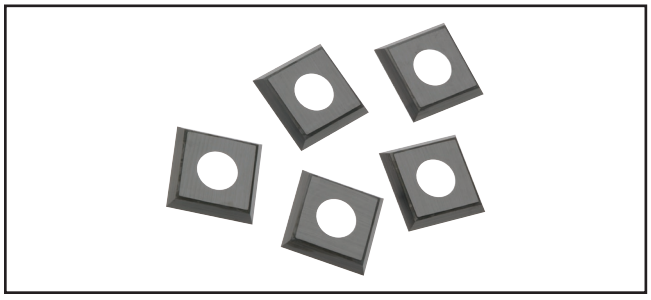

Figure 26. T21348 Indexable Carbide Inserts.

G2544—Solvent Cleaner & Degreaser
A great product for removing the waxy shipping grease from your machine during clean up.

Figure 27. Cleaner/degreaser available from Grizzly.

T10127 Parts Breakdown and List

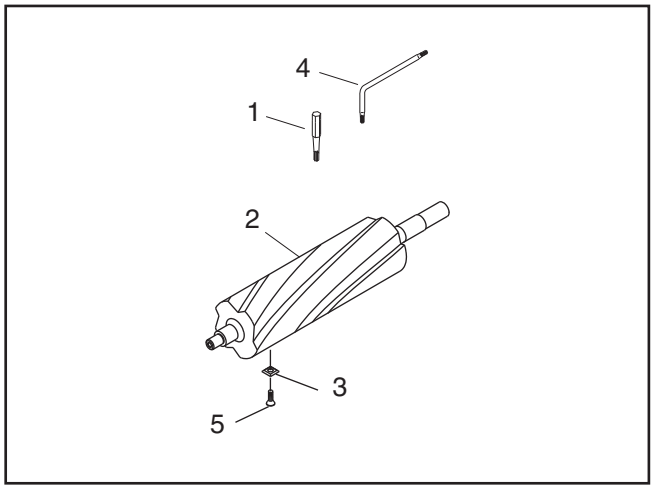

REF	PART #	DESCRIPTION
1	P0452Z001	DRIVER BIT TORX T20
2	P0609X023	SPIRAL CUTTERHEAD 12"
3	P0452Z002	INDEXABLE INSERT 14 X 14 X 2
4	P0452Z009	L-WRENCH TORX T20
5	PFH35M	FLAT HD TORX SCR T20 M6-1 X 15

grizzly.com®
TOOL WEBSITE

Buy Direct and Save with Grizzly®– Trusted, Proven and a Great Value!

~Since 1983~

Visit Our Website Today For Current Specials!

ORDER
24 HOURS A DAY!
1-800-523-4777

VISA MasterCard DISCOVER NOVUS AMERICAN EXPRESS®