MODEL T10718
50" DELUXE
PAN AND BOX BRAKE

OWNER'S MANUAL

(For models manufactured since 1/13)

COPYRIGHT © MARCH, 2013 BY GRIZZLY INDUSTRIAL, INC.
WARNING: NO PORTION OF THIS MANUAL MAY BE REPRODUCED IN ANY SHAPE OR FORM WITHOUT THE WRITTEN APPROVAL OF GRIZZLY INDUSTRIAL, INC.
#TS15552 PRINTED IN CHINA

⚠ WARNING!

This manual provides critical safety instructions on the proper setup, operation, maintenance, and service of this machine/tool. Save this document, refer to it often, and use it to instruct other operators.

Failure to read, understand and follow the instructions in this manual may result in fire or serious personal injury—including amputation, electrocution, or death.

The owner of this machine/tool is solely responsible for its safe use. This responsibility includes but is not limited to proper installation in a safe environment, personnel training and usage authorization, proper inspection and maintenance, manual availability and comprehension, application of safety devices, cutting/sanding/grinding tool integrity, and the usage of personal protective equipment.

The manufacturer will not be held liable for injury or property damage from negligence, improper training, machine modifications or misuse.

⚠ WARNING!

Some dust created by power sanding, sawing, grinding, drilling, and other construction activities contains chemicals known to the State of California to cause cancer, birth defects or other reproductive harm. Some examples of these chemicals are:

- **Lead from lead-based paints.**
- **Crystalline silica from bricks, cement and other masonry products.**
- **Arsenic and chromium from chemically-treated lumber.**

Your risk from these exposures varies, depending on how often you do this type of work. To reduce your exposure to these chemicals: Work in a well ventilated area, and work with approved safety equipment, such as those dust masks that are specially designed to filter out microscopic particles.

Table of Contents

INTRODUCTION 2
Machine Description 2
Contact Info 2
Manual Accuracy 2
Identification 3
Machine Data Sheet 4

SECTION 1: SAFETY 5
Safety Instructions for Machinery 5
Additional Safety for Pan & Box Brakes 7

SECTION 2: SETUP 8
Unpacking 8
Needed for Setup 8
Cleanup 9
Cleaning Blocks 9
Site Considerations 10
Lifting & Placing 11
Mounting 11
Leveling 12
Loosening Work Stop 12

SECTION 3: OPERATIONS 13
Operation Overview 13
Basic Controls 14
Bend Allowance 14
Adjusting Setback 14
Adjusting Clamping Pressure 15
Adjusting Work Stop 16
Spacing Fingers & Blocks 17
Aligning Fingers & Blocks 17
Aligning Clamping Fingers 17
Aligning Bending Blocks 17

SECTION 4: ACCESSORIES 18

SECTION 5: MAINTENANCE 21
Schedule 21
Daily Maintenance 21
Weekly Maintenance 21
Cleaning & Protecting 21
Lubrication 21
Clamping Leaf Slide Shafts 21
Bending Leaf Pivot Bushings 22
Bending Leaf Cam 22
Setback Shafts 22

SECTION 6: TROUBLESHOOTING 23

SECTION 7: PARTS 24
Main 24
Labels & Cosmetics 26

WARRANTY & RETURNS 29

INTRODUCTION

Machine Description

This 50" Deluxe Pan & Box Brake is used to make straight bends, boxes, pans, and trays in sheet metal that is 16 gauge or thinner.

Clamping fingers and bending blocks of different lengths can be arranged to make 90° bends of varying widths up to 50" wide. The fingers and blocks can be spaced in any configuration necessary to permit the sides of a box to be bent without interfering with previously bent sides.

Setback and clamping pressure are easily adjusted for different workpiece requirements, and the adjustable bending stop is used to make repetitive bends of the same angle.

Contact Info

We stand behind our machines! If you have questions or need help, contact us with the information below. Before contacting, make sure you get the **serial number** and **manufacture date** from the machine ID label. This will help us help you faster.

Grizzly Technical Support
1815 W. Battlefield
Springfield, MO 65807
Phone: (570) 546-9663
Email: techsupport@grizzly.com

We want your feedback on this manual. What did you like about it? Where could it be improved? Please take a few minutes to give us feedback.

Grizzly Documentation Manager
P.O. Box 2069
Bellingham, WA 98227-2069
Email: manuals@grizzly.com

Manual Accuracy

We are proud to provide a high-quality owner's manual with your new machine!

We made every effort to be exact with the instructions, specifications, drawings, and photographs in this manual. Sometimes we make mistakes, but our policy of continuous improvement also means that **sometimes the machine you receive is slightly different than shown in the manual**.

If you find this to be the case, and the difference between the manual and machine leaves you confused or unsure about something, check our website for an updated version. We post current manuals and manual updates for free on our website at **www.grizzly.com**.

Alternatively, you can call our Technical Support for help. Before calling, make sure you write down the **Manufacture Date** and **Serial Number** from the machine ID label (see below). This information is required for us to provide proper tech support, and it helps us determine if updated documentation is available for your machine.

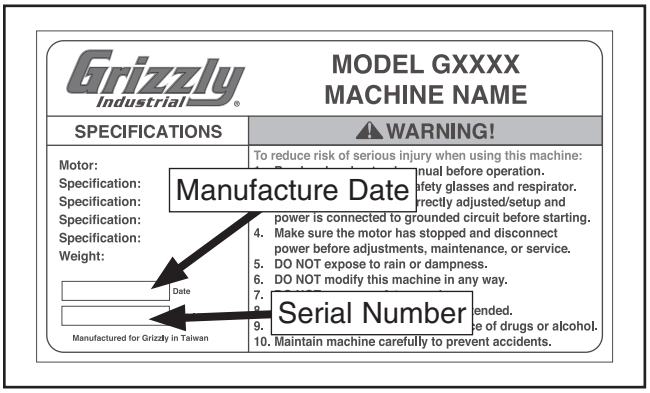

Identification

Clamping Leaf
Clamping Base
Clamping Fingers
Pressure Adjustment Knob
Lifting Bracket (1 of 2)
Bending Blocks
Adjustable Bending Stop
Front View
Bending Leaf
Setback Adjustment Knob
Foot Pedal

Workpiece Support
Rear View
Clamping Strut
Machine Mounting Locations

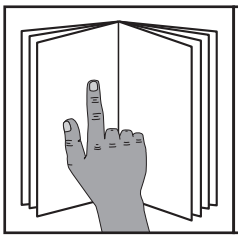

⚠WARNING

To reduce your risk of serious injury, read this entire manual BEFORE using machine.

MACHINE DATA SHEET

Customer Service #: (570) 546-9663 · To Order Call: (800) 523-4777 · Fax #: (800) 438-5901

MODEL T10718 50" DELUXE PAN AND BOX BRAKE

Product Dimensions:

Weight..... 860 lbs.
Width (side-to-side) x Depth (front-to-back) x Height..... 63 x 38 x 44-3/4 in.
Footprint (Length x Width)..... 63 x 35-1/2 in.

Shipping Dimensions:

Type..... Wood Crate
Content..... Machine
Weight..... 945 lbs.
Length x Width x Height..... 68 x 29 x 51 in.
Must Ship Upright..... Yes

Main Specifications:

Capacities

Maximum Width..... 50 in.
Maximum Thickness Mild Steel..... 16 Gauge
Aluminum..... 14 Gauge
Soft Brass..... 14 Gauge
Annealed Phosphor Bronze..... 16 Gauge
Soft Copper..... 14 Gauge
Hard Copper..... 16 Gauge
Brake Range..... 0 – 135 Degrees
Minimum Reverse Bend..... 5/8 in.
Maximum Height of Pan/Box Brake Sides..... 2 in.

Construction

Base..... Steel
Bending Leaf..... Steel
Clamping Leaf..... Steel
Fingers..... Precision-Ground Steel, Hardened Edges

Other Specifications:

Country of Origin ..... China

SECTION 1: SAFETY

For Your Own Safety, Read Instruction Manual Before Operating This Machine

The purpose of safety symbols is to attract your attention to possible hazardous conditions. This manual uses a series of symbols and signal words intended to convey the level of importance of the safety messages. The progression of symbols is described below. Remember that safety messages by themselves do not eliminate danger and are not a substitute for proper accident prevention measures. Always use common sense and good judgment.

DANGER	**Indicates an imminently hazardous situation which, if not avoided, WILL result in death or serious injury.**
WARNING	**Indicates a potentially hazardous situation which, if not avoided, COULD result in death or serious injury.**
CAUTION	**Indicates a potentially hazardous situation which, if not avoided, MAY result in minor or moderate injury. It may also be used to alert against unsafe practices.**
NOTICE	**This symbol is used to alert the user to useful information about proper operation of the machine.**

Safety Instructions for Machinery

WARNING

OWNER'S MANUAL. Read and understand this owner's manual BEFORE using machine.

TRAINED OPERATORS ONLY. Untrained operators have a higher risk of being hurt or killed. Only allow trained/supervised people to use this machine. When machine is not being used, disconnect power, remove switch keys, or lock-out machine to prevent unauthorized use—especially around children. Make your workshop kid proof!

DANGEROUS ENVIRONMENTS. Do not use machinery in areas that are wet, cluttered, or have poor lighting. Operating machinery in these areas greatly increases the risk of accidents and injury.

MENTAL ALERTNESS REQUIRED. Full mental alertness is required for safe operation of machinery. Never operate under the influence of drugs or alcohol, when tired, or when distracted.

ELECTRICAL EQUIPMENT INJURY RISKS. You can be shocked, burned, or killed by touching live electrical components or improperly grounded machinery. To reduce this risk, only allow qualified service personnel to do electrical installation or repair work, and always disconnect power before accessing or exposing electrical equipment.

DISCONNECT POWER FIRST. Always disconnect machine from power supply BEFORE making adjustments, changing tooling, or servicing machine. This prevents an injury risk from unintended startup or contact with live electrical components.

EYE PROTECTION. Always wear ANSI-approved safety glasses or a face shield when operating or observing machinery to reduce the risk of eye injury or blindness from flying particles. Everyday eyeglasses are NOT approved safety glasses.

⚠WARNING

WEARING PROPER APPAREL. Do not wear clothing, apparel or jewelry that can become entangled in moving parts. Always tie back or cover long hair. Wear non-slip footwear to reduce risk of slipping and losing control or accidentally contacting cutting tool or moving parts.

HAZARDOUS DUST. Dust created by machinery operations may cause cancer, birth defects, or long-term respiratory damage. Be aware of dust hazards associated with each workpiece material. Always wear a NIOSH-approved respirator to reduce your risk.

HEARING PROTECTION. Always wear hearing protection when operating or observing loud machinery. Extended exposure to this noise without hearing protection can cause permanent hearing loss.

REMOVE ADJUSTING TOOLS. Tools left on machinery can become dangerous projectiles upon startup. Never leave chuck keys, wrenches, or any other tools on machine. Always verify removal before starting!

USE CORRECT TOOL FOR THE JOB. Only use this tool for its intended purpose—do not force it or an attachment to do a job for which it was not designed. Never make unapproved modifications—modifying tool or using it differently than intended may result in malfunction or mechanical failure that can lead to personal injury or death!

AWKWARD POSITIONS. Keep proper footing and balance at all times when operating machine. Do not overreach! Avoid awkward hand positions that make workpiece control difficult or increase the risk of accidental injury.

CHILDREN & BYSTANDERS. Keep children and bystanders at a safe distance from the work area. Stop using machine if they become a distraction.

GUARDS & COVERS. Guards and covers reduce accidental contact with moving parts or flying debris. Make sure they are properly installed, undamaged, and working correctly BEFORE operating machine.

FORCING MACHINERY. Do not force machine. It will do the job safer and better at the rate for which it was designed.

NEVER STAND ON MACHINE. Serious injury may occur if machine is tipped or if the cutting tool is unintentionally contacted.

STABLE MACHINE. Unexpected movement during operation greatly increases risk of injury or loss of control. Before starting, verify machine is stable and mobile base (if used) is locked.

USE RECOMMENDED ACCESSORIES. Consult this owner's manual or the manufacturer for recommended accessories. Using improper accessories will increase the risk of serious injury.

UNATTENDED OPERATION. To reduce the risk of accidental injury, turn machine ***OFF*** and ensure all moving parts completely stop before walking away. Never leave machine running while unattended.

MAINTAIN WITH CARE. Follow all maintenance instructions and lubrication schedules to keep machine in good working condition. A machine that is improperly maintained could malfunction, leading to serious personal injury or death.

DAMAGED PARTS. Regularly inspect machine for damaged, loose, or mis-adjusted parts—or any condition that could affect safe operation. Immediately repair/replace BEFORE operating machine. For your own safety, DO NOT operate machine with damaged parts!

MAINTAIN POWER CORDS. When disconnecting cord-connected machines from power, grab and pull the plug—NOT the cord. Pulling the cord may damage the wires inside. Do not handle cord/plug with wet hands. Avoid cord damage by keeping it away from heated surfaces, high traffic areas, harsh chemicals, and wet/damp locations.

EXPERIENCING DIFFICULTIES. If at any time you experience difficulties performing the intended operation, stop using the machine! Contact our Technical Support at (570) 546-9663.

⚠WARNING
Additional Safety for Pan & Box Brakes

CRUSHING & AMPUTATION INJURIES. The brake can quickly crush or amputate fingers, hands, or body parts. Never place fingers, hands, or body parts between or near the clamping fingers and bending blocks during operation.

SECURING BRAKE. Before using, secure the brake to the floor so it can support the weight and dynamic forces involved in bending sheet metal. Otherwise, the brake may unexpectedly move or tip during operation, causing serious injury or property damage.

TOOLS IN POOR CONDITION. Using this tool with loose hardware or damaged components could result in sudden, unexpected movements during use. Inspect the brake for cracked components, damaged linkage, levers, or loose fasteners. Correct any problems before use.

LEAVING UNATTENDED. To reduce the risk of crushing or amputation injuries with children or visitors, lower the clamping leaf and lock the foot pedal down when not in use.

METAL EDGES. Sharp edges on sheet metal can result in severe cuts. Always wear leather gloves and chamfer/de-burr sharp sheet metal edges.

COMFORTABLE BODY POSITION. The required body motion to operate the brake can result in operator injury over time if proper ergonomics are not used during operation. Always keep your body centered with the machine and your back straight when using the foot pedal.

HEATING METAL. Heating the workpiece with a torch or welding it while clamped in the brake may weaken the fingers, blocks, and frame. Do not use a torch, welder, or other similar heating tool near the brake.

CAPACITY. Exceeding the capacity of the brake may result in sudden breakage that ejects dangerous metal debris at the operator or bystanders, or causes machine damage. Only use sheet metal that is within the rated capacity of this brake (refer to the **Machine Data Sheet** on **Page 4**).

FOOTING. This brake requires you to apply moderate force to the foot pedal while bending. If your foot slips, you could fall down and be injured. Always stand with one foot comfortably on the floor during operation. Never use both feet on the foot pedal or jump on it. Never have one foot under the foot pedal during operation.

⚠WARNING

Like all machinery there is potential danger when operating this machine. Accidents are frequently caused by lack of familiarity or failure to pay attention. Use this machine with respect and caution to decrease the risk of operator injury. If normal safety precautions are overlooked or ignored, serious personal injury may occur.

⚠CAUTION

No list of safety guidelines can be complete. Every shop environment is different. Always consider safety first, as it applies to your individual working conditions. Use this and other machinery with caution and respect. Failure to do so could result in serious personal injury, damage to equipment, or poor work results.

SECTION 2: SETUP

Unpacking

This machine was carefully packaged for safe transport. When unpacking, separate all enclosed items from packaging materials and inspect them for shipping damage. ***If items are damaged, please call us immediately at (570) 546-9663.***

IMPORTANT: Save all packaging materials until you are completely satisfied with the machine and have resolved any issues between Grizzly or the shipping agent. *You MUST have the original packaging to file a freight claim. It is also extremely helpful if you need to return your machine later.*

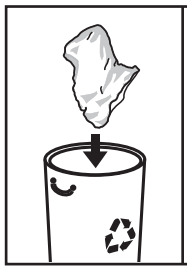

WARNING

SUFFOCATION HAZARD!

Keep children and pets away from plastic bags or packing materials shipped with this machine. Discard immediately.

Needed for Setup

The following are needed to complete the setup process, but are not included with your machine.

Description	Qty
• Additional People	1
• Safety Glasses	1 for Each Person
• Cleaner/Degreaser (**Page 9**)	As Needed
• Disposable Shop Rags	As Needed
• Hex Wrench 8mm	1
• Mounting Hardware (**Page 11**)	As Needed
• Forklift	1
• Lifting Chains w/Safety Hooks (rated for 1500 lbs.)	2

Cleanup

The unpainted surfaces of your machine are coated with a heavy-duty rust preventative that prevents corrosion during shipment and storage. This rust preventative works extremely well, but it will take a little time to clean.

Be patient and do a thorough job cleaning your machine. The time you spend doing this now will give you a better appreciation for the proper care of your machine's unpainted surfaces.

There are many ways to remove this rust preventative, but the following steps work well in a wide variety of situations. Always follow the manufacturer's instructions with any cleaning product you use and make sure you work in a well-ventilated area to minimize exposure to toxic fumes.

Before cleaning, gather the following:

- Disposable rags
- Cleaner/degreaser (WD•40 works well)
- Safety glasses & disposable gloves
- Plastic paint scraper (optional)

Basic steps for removing rust preventative:

1. Put on safety glasses.

2. Coat the rust preventative with a liberal amount of cleaner/degreaser, then let it soak for 5–10 minutes.

3. Wipe off the surfaces. If your cleaner/degreaser is effective, the rust preventative will wipe off easily. If you have a plastic paint scraper, scrape off as much as you can first, then wipe off the rest with the rag.

4. Repeat **Steps 2–3** as necessary until clean, then coat all unpainted surfaces with a quality metal protectant to prevent rust.

NOTICE

Avoid chlorine-based solvents, such as acetone or brake parts cleaner, that may damage painted surfaces.

Cleaning Blocks

The clamping fingers and bending blocks (**Figure 1**) are coated with rust preventative that must be removed before beginning operation.

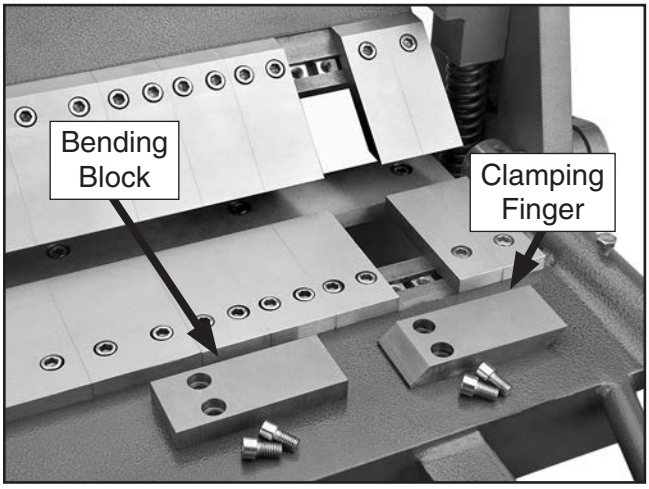

Figure 1. Bending finger and clamping block removed for cleaning.

Although the rust preventative was applied only to the visible surfaces of the blocks, some may have worked in between and underneath them. We recommend that you remove all of the blocks to thoroughly clean them.

If you do remove the blocks, properly align them as described in the **Aligning Fingers & Blocks** subsection on **Page 17** after re-installing.

Site Considerations

Physical Environment

The physical environment where the machine is operated is important for safe operation and longevity of components. For best results, operate this machine in a dry environment that is free from excessive moisture, hazardous chemicals, airborne abrasives, or extreme conditions. Extreme conditions for this type of machinery are generally those where the ambient temperature range is outside 41°–104°F; the relative humidity range is outside 20–95% (non-condensing); or the environment is subject to vibration, shocks, or bumps.

Space Allocation

Consider the largest size of workpiece that will be processed through this machine and provide enough space around the machine for adequate operator material handling or the installation of auxiliary equipment. With permanent installations, leave enough space around the machine to open or remove doors/covers as required by the maintenance and service described in this manual. **See below for required space allocation.**

Weight Load

Refer to the **Machine Data Sheet** for the weight of your machine. Make sure that the surface upon which the machine is placed will bear the weight of the machine, additional equipment that may be installed on the machine, and the heaviest workpiece that will be used. Additionally, consider the weight of the operator and any dynamic loading that may occur when operating the machine.

Lighting

Lighting around the machine must be adequate enough that operations can be performed safely. Shadows, glare, or strobe effects that may distract or impede the operator must be eliminated.

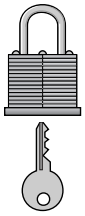

⚠ CAUTION

Children or untrained people may be seriously injured by this machine. Only install in an access restricted location.

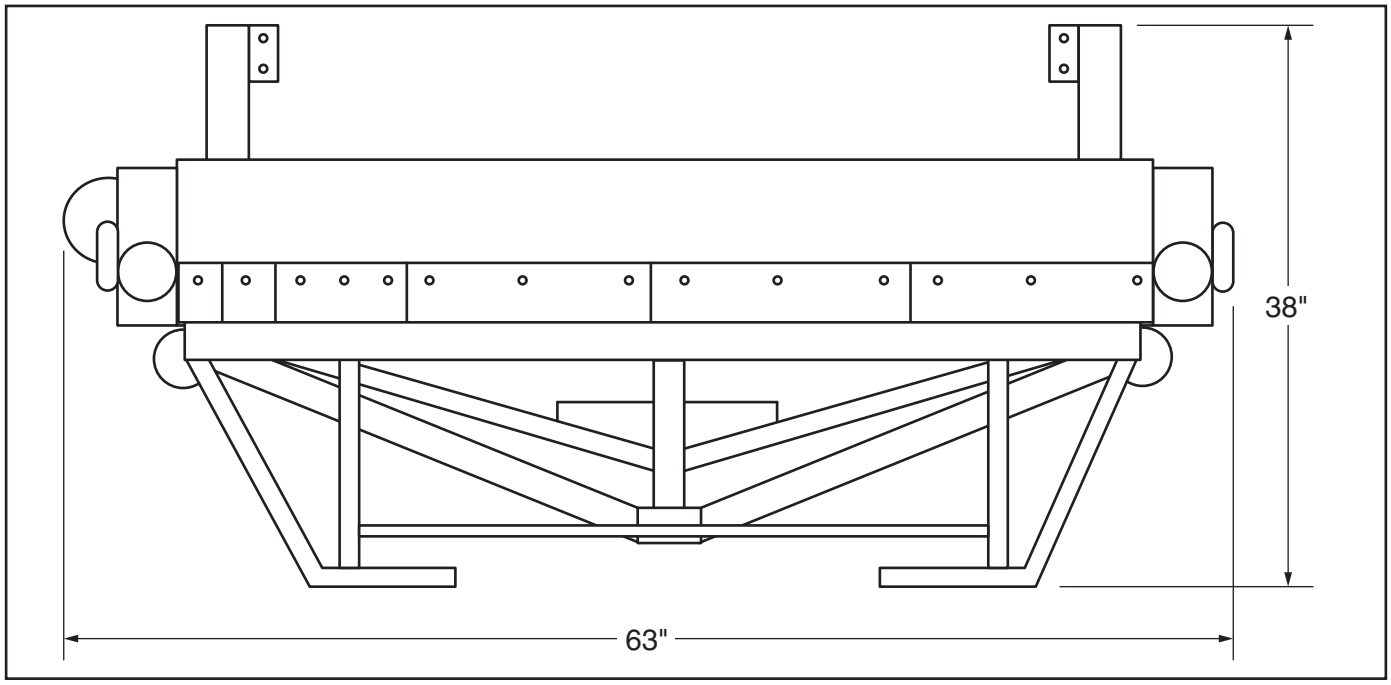

Figure 2. Working clearances.

Lifting & Placing

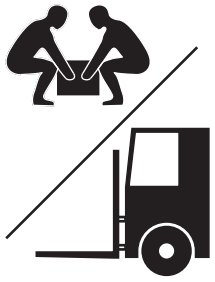

WARNING

HEAVY LIFT!

Straining or crushing injury may occur from improperly lifting machine or some of its parts. To reduce this risk, get help from other people and use a forklift (or other lifting equipment) rated for weight of this machine.

To lift and place the brake:

1. Move the brake to the installation location while it is still on the shipping pallet.

2. Unbolt the brake from the shipping pallet.

3. Make sure the foot pedal is locked in the down position.

4. Attach the safety hooks and chains to the side lifting brackets, as shown in **Figure 3**, then connect the chains to the fork lift.

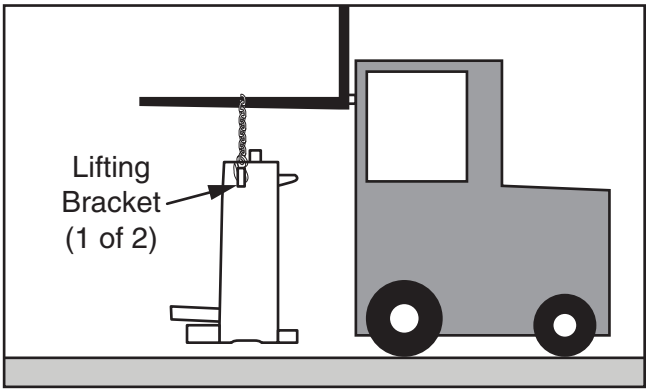

Figure 3. Lifting brake with safety hooks and chains.

5. With the help of another person on the ground to prevent the brake from swinging or rocking when lifted, raise the brake just enough to clear the shipping pallet, then remove the pallet.

6. Lower the brake into place and mount it to the floor as recommended in the next subsection.

Mounting

The Model T10718 is shipped fully assembled. However, due to the significant dynamic forces on the brake during operation, you must secure it to the floor to prevent tipping. Because floor materials vary, floor mounting hardware is not included.

Anchor studs and lag shield anchors with lag screws (**Figure 4**) are two popular methods for anchoring the brake to a concrete floor. We suggest you research the many options and methods for mounting your machine and choose the best that fits your specific application.

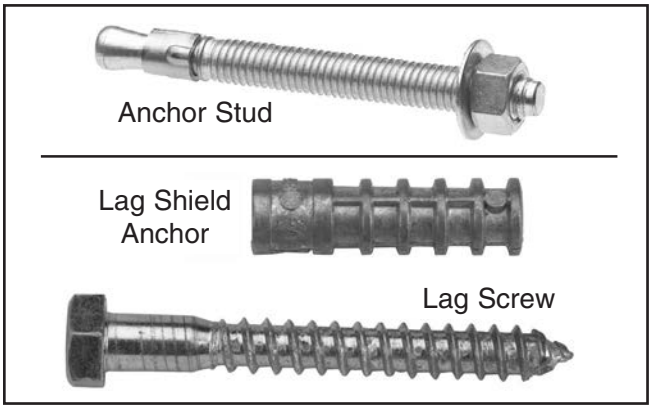

Figure 4. Typical fasteners for mounting to concrete floors.

Leveling

Leveling the brake helps the leafs and other cast-iron components remain straight and flat during the lifespan of the machine. Components on an unleveled machine may slowly twist due to the dynamic loads placed on the machine during operation, which will negatively affect the ability of the brake to produce accurate bends.

If needed, use metal shims between the base and the floor when leveling the machine.

For best results, use a precision level that is at least 12" long and sensitive enough to show a distance movement when a 0.003" shim (approximately the thickness of one sheet of standard newspaper) is placed under one end of the level.

See **Figure 5** for an example of a high precision level available from Grizzly.

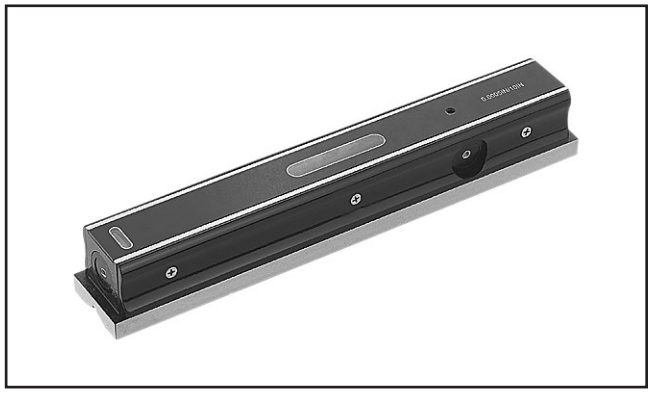

Figure 5. Model H2683 Master Machinist's Level.

Loosening Work Stop

The clamping cap screw on the work stop collar (see **Figure 6**) was tightened at the factory to keep the bending leaf from moving. Before beginning operation, use an 8mm hex wrench to loosen the clamping cap screw so that the bending leaf can rotate through its full arc.

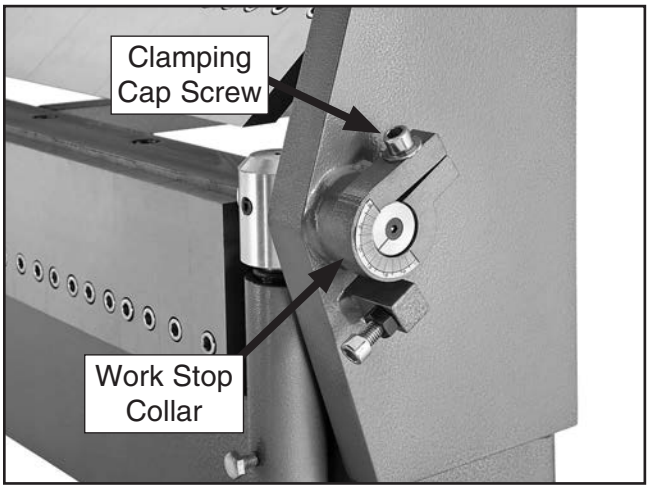

Figure 6. Work stop collar and clamping cap screw.

SECTION 3: OPERATIONS

Operation Overview

The purpose of this overview is to provide the novice machine operator with a basic understanding of how the machine is used during operation, so the machine controls/components discussed later in this manual are easier to understand.

Due to the generic nature of this overview, it is **not** intended to be an instructional guide. To learn more about specific operations, read this entire manual, seek additional training from experienced machine operators, and do additional research outside of this manual by reading "how-to" books, trade magazines, or websites.

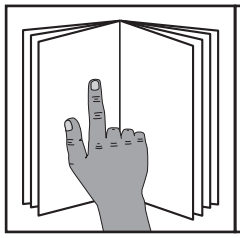

WARNING

To reduce your risk of serious injury, read this entire manual BEFORE using machine.

WARNING

Bodily injury could result from using this machine. Always wear safety glasses, leather work boots, and heavy duty leather work gloves when operating this machine or whenever handling sheet metal.

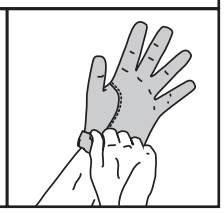

To complete a typical operation, the operator does the following:

1. Examines the workpiece to make sure it is suitable for bending.
2. If required for the operation, adjusts the clamping finger and bending block spacing.
3. Adjusts the clamping pressure for the workpiece thickness.
4. Correctly adjusts the setback.
5. Puts on safety glasses, leather boots, and leather gloves.
6. Properly positions the workpiece underneath the clamping fingers and locks the foot pedal in the down position to secure the workpiece.
7. Using proper body position and both hands, raises the bending leaf to form the correct bend angle.
8. Lowers the bending leaf, then unlocks raises and the foot pedal to release and remove the workpiece.

NOTICE

If you are not experienced with this type of machine, WE STRONGLY RECOMMEND that you seek additional training outside of this manual. Read books/magazines or get formal training before beginning any projects. Regardless of the content in this section, Grizzly Industrial will not be held liable for accidents caused by lack of training.

Basic Controls

Use **Figure 7** and following descriptions to become familiar with the basic controls of the brake.

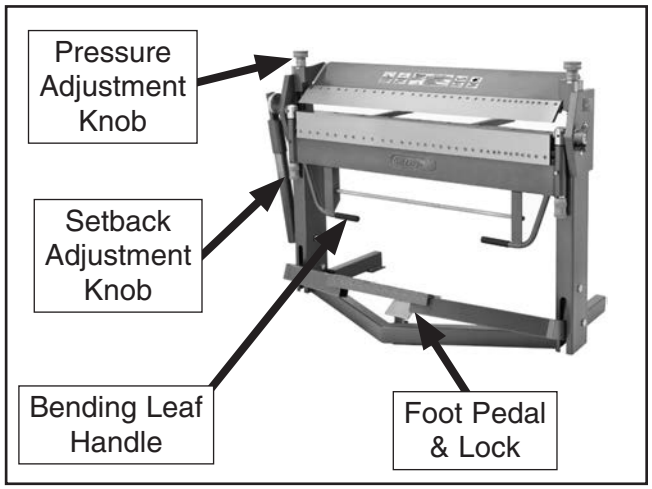

Figure 7. Basic controls.

Pressure Adjustment Knobs: Adjust the clamping pressure for different workpiece thicknesses.

Setback Adjustment Knobs: Adjust the distance of the bending blocks from the clamping fingers.

Bending Leaf Handle: Allows the operator to lift the bending leaf to produce the bend.

Foot Pedal & Lock: Controls the action of the clamping leaf.

⚠CAUTION

Sharp edges of sheet metal can easily cut fingers, hands, or other body parts. Always wear leather gloves when handling sheet metal, and always chamfer and debur the edges.

Bend Allowance

When a bend is made in sheet metal, the inside surface of the bend compresses and the outside surface stretches. To bend metal objects accurately, you need to consider the length of each bend, especially when more than one bend is required. This is called bend allowance.

The bend allowance is added to the sum of the outside dimensions of the workpiece flat surfaces to obtain the overall length and width of the blank needed to make a particular part.

Exact allowances can only be obtained by trial due to differences in sheet metal hardness, whether the bend is with or across the grain, and difficulties in making an exact bend radius. Formulas for calculating the bend allowance can be found in metalworking handbooks or the internet.

Adjusting Setback

Setback is the required distance between the bending blocks and the clamping fingers to properly make the bend (see **Figure 8**). A number of factors determine the correct setback distance, such as bend allowance, bend radius, and material thickness.

There are many sources to help you calculate the correct setback for your operation, such as metalworking handbooks, the internet, or experienced sheet metal workers.

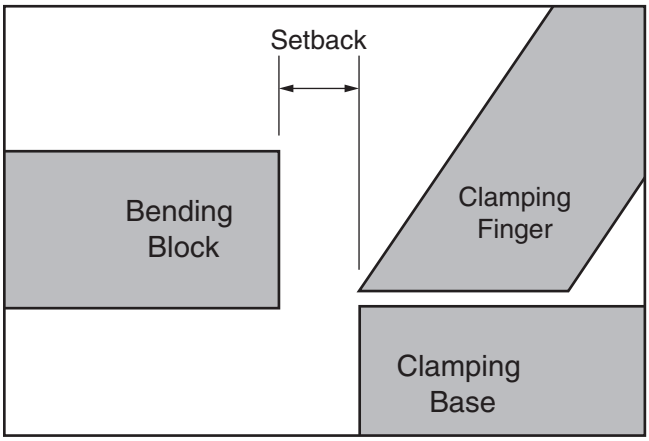

Figure 8. Identification of setback.

Tools Needed	Qty
Wrench or Socket 14mm	1
Calipers (Optional)	1

To adjust the setback:

1. Loosen the hex bolts (see **Figure 9**) on each side of the bending leaf.

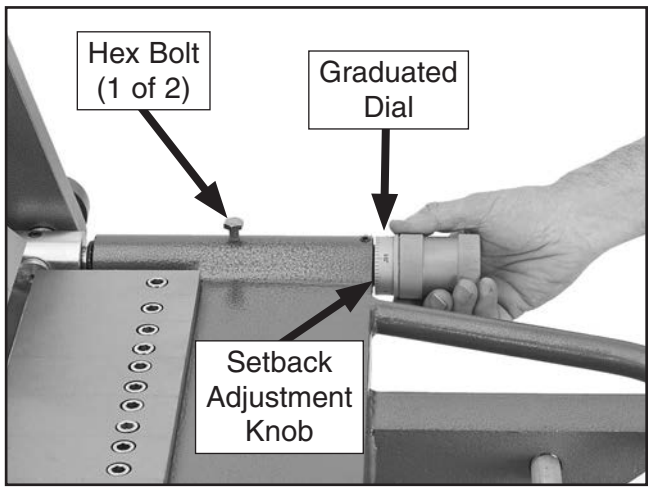

Figure 9. Setback controls.

2. Rotate one setback adjustment knob a small amount, then rotate the other knob the same amount and direction. This prevents the bending leaf from binding on the setback shafts and keeps it parallel with the clamping leaf.

   Note: *The graduated dials are marked in 0.002" increments with one full revolution moving the bending leaf 0.100".*

3. Repeat **Step 2** until you have the correct setback, then re-tighten the hex bolts.

   Tip: *Use calipers for a precise method of checking the setback.*

Adjusting Clamping Pressure

When securing the workpiece with the foot pedal, the correct clamping pressure depends on the workpiece thickness. The ideal pressure locks the workpiece firmly in position between the clamping fingers and base without excessive compression that could damage the workpiece or brake.

Rotate one pressure adjustment knob (see **Figure 10**) a small amount, then rotate the other knob the same amount and direction. This prevents the clamping leaf from binding on the shafts and keeps it parallel with the clamping base.

Note: *The graduated dials are marked in 0.002" increments with one full revolution moving the bending leaf 0.100".*

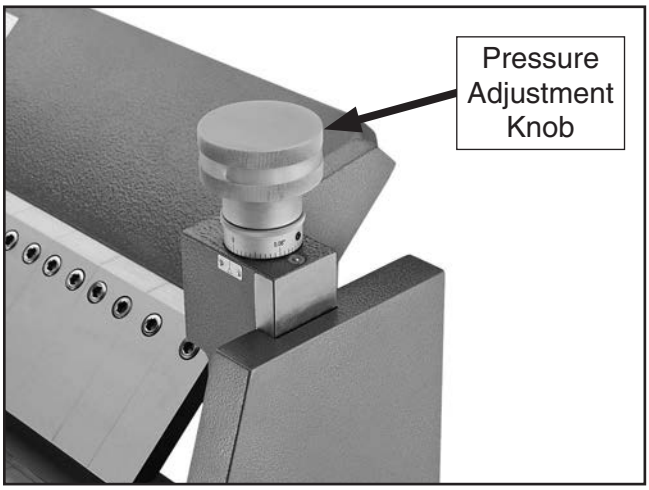

Figure 10. Pressure adjustment knob.

Continued on next page →

If the clamping pressure is correctly adjusted, the lock plate (see **Figure 11**) will spring forward and secure the foot pedal down when it is fully depressed.

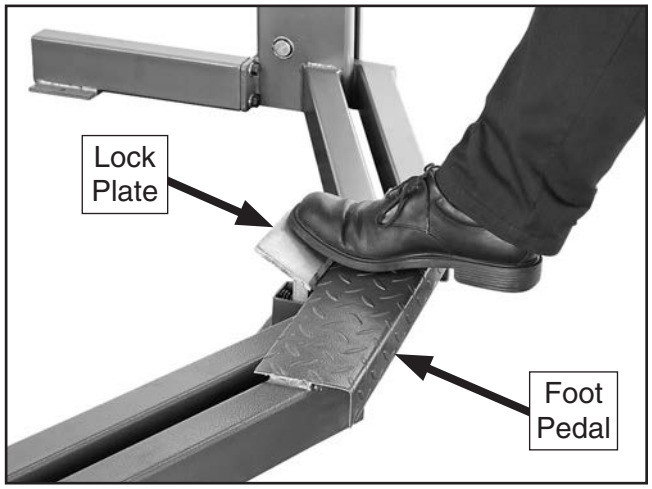

Figure 11. Using the foot pedal.

We recommend that the foot pedal always be locked down after positioning the workpiece and before making the bend. This will help ensure the workpiece stays in the proper position during bending.

NOTICE

Make sure the clamping pressure is correctly adjusted for the workpiece thickness to prevent workpiece or machine damage when the foot pedal is fully depressed.

Adjusting Work Stop

The work stop mechanism allows the operator to produce repetitive bends at the same angle.

Tools Needed	**Qty**
Hex Wrench 8mm	1
Wrench 16mm	1

To adjust the work stop:

1. Loosen the clamping cap screw on the work stop collar (see **Figure 12**) so the stop collar is loose on the shaft.

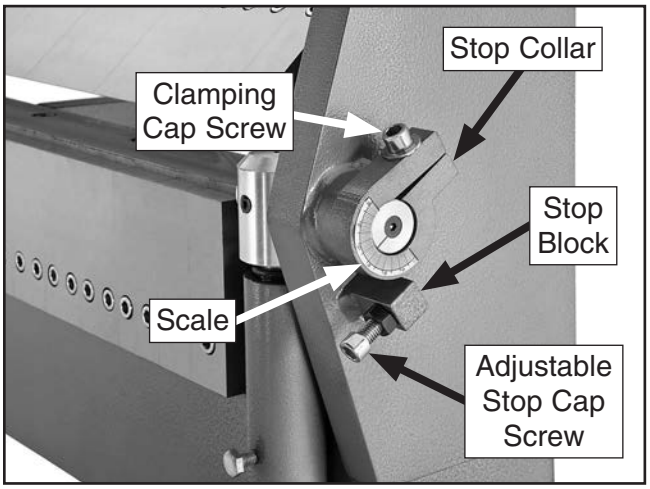

Figure 12. Work stop controls.

2. Raise the bending leaf to the correct angle.

   Note: *The scale on the stop collar displays the relative angle of the bending leaf.*

3. Rotate the stop collar clockwise until it rests on the stop block, then re-tighten the clamping cap screw to secure the setting.

   Note: *If needed, loosen the hex nut on the adjustable stop cap screw, then use the cap screw for additional adjustment.*

Spacing Fingers & Blocks

The clamping and bending blocks can be spaced apart for clearance when making pans or boxes. This requires removing one or more sets of blocks and spacing the others to match the width of your pan or box. See **Figure 13** for an example.

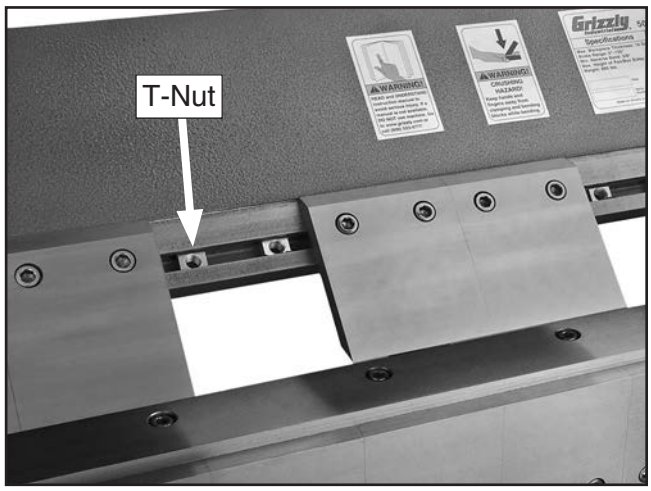

Figure 13. Example of block spacing.

The T-nuts under the fingers and blocks that secure them can be moved along their slots to allow for any spacing configuration required.

As you space the fingers and blocks, make sure that you properly align them, as described in the next subsection.

Aligning Fingers & Blocks

To help ensure the bend is even along its length, the clamping fingers and bending blocks must be properly aligned with one another.

Tool Needed	Qty
Hex Wrench 8mm	1

Aligning Clamping Fingers

1. Loosen the cap screws that secure the finger, but do not remove them.

2. Apply upward pressure to the finger until it stops, then re-tighten the cap screws.

3. Examine the entire row of clamping fingers to make sure the upper edges are all aligned with one another (**Figure 14**). If necessary, repeat **Steps 1–2** until they are.

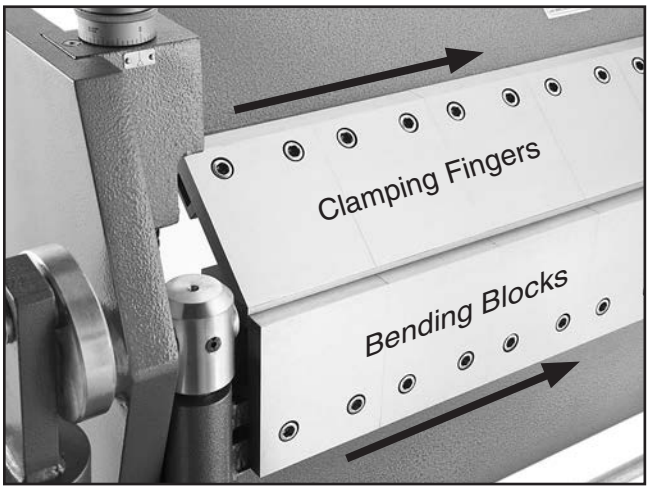

Figure 14. Clamping fingers and bending blocks properly aligned.

Aligning Bending Blocks

The bending blocks are aligned in a similar manner as the clamping fingers except you apply downward pressure (or toward the operator, if the bending leaf is raised) to align the block edges with one another.

SECTION 4: ACCESSORIES

⚠WARNING

Installing unapproved accessories may cause machine to malfunction, resulting in serious personal injury or machine damage. To reduce this risk, only install accessories recommended for this machine by Grizzly.

NOTICE

Refer to our website or latest catalog for additional recommended accessories.

Bostitch Compound Action Aviations Snips
T22298—Straight
T22299—Left
T22300—Right
These 10" Aviation Snips are designed for cutting heavy stock in a straight, left, or right cutting direction. Developed with TiN-coated cutting blades to reduce wear and extend blade life, they cut up to 18 gauge cold-rolled steel or 23 gauge stainless steel. The patented flush-mounted side hardware also helps prevent metal from catching while cutting. These snips meet or exceed ANSI standards.

Figure 15. Bostitch Compound Aviation Snips.

T23963—Moly-D Multi-Function ISO 32 Machine Oil, 5-Gallons
Formulated with the superior friction-reducing compound Moly-D, this ISO 32 Multi-Function Machine Oil is one of the best formulas we've found for the lubrication tasks on so many of our metalworking machines.

Figure 16. T23963 Moly-D Machine Oil

T25208—23-Piece Deburring Set
Includes: 380-0060 double burr; 2-piece 380-0088 handle; 380-0097, 380-0098, and 380-0091 holders; D25 and D40 scrapers; C20 countersink; ES100 and ES200 blades (5 each); V13, and A13 blades; wrench and hex wrenches; case.

Figure 17. Model T25208 Deburring Set.

G4956—Super Nibbler
The super nibbler is just the ticket for cutting sheet metal up to 3⁄64" thick. Extremely narrow headed design allows cuts in hard-to-reach areas, yet still features a safety guard to prevent flying splinters. 10¼" overall.

Figure 18. Model G4956 Super Nibbler.

Recommended Metal Protectants

G5562—SLIPIT® 1 Qt. Gel
G5563—SLIPIT® 12 oz Spray
G2871—Boeshield® T-9 12 oz Spray
G2870—Boeshield® T-9 4 oz Spray
H3788—G96® Gun Treatment 12 oz Spray
H3789—G96® Gun Treatment 4.5 oz Spray

Figure 19. Recommended products for protecting unpainted cast iron/steel part on machinery.

G8781—4" Suction Cup
Handle plate glass, glass mirrors, and sheet metal with safety and security. Simple hand lever action provides tremendous gripping power on any flat, smooth material. Buy two Suction Cups for two-handed control!

Figure 20. Model G8781 4" Suction Cup.

H5503—Electric Sheet Metal Shear
- Motor: ½ HP, 110V, 2500 RPM, 3.8 Amp
- Swivel head adjust 360°
- Variable speed: 0–2500 RPM
- Cuts up to 14-gauge in mild steel and 18 gauge in stainless, at up to 150 in./min.
- Weighs 5 lbs.

Figure 21. Model H5503 Electric Sheet Metal Shear.

T10717—50" Deluxe Foot Shear

This 50" Deluxe Foot Shear has 7/16" blades, 0"–35" front scale length, and 0"–24" rear stop scale length with dual locks and micro-adjustable dials. Will cut a maximum of 16-gauge mild steel at half width and 18-gauge at full width. The shear head sliding rails feature fully adjustable gib plates.

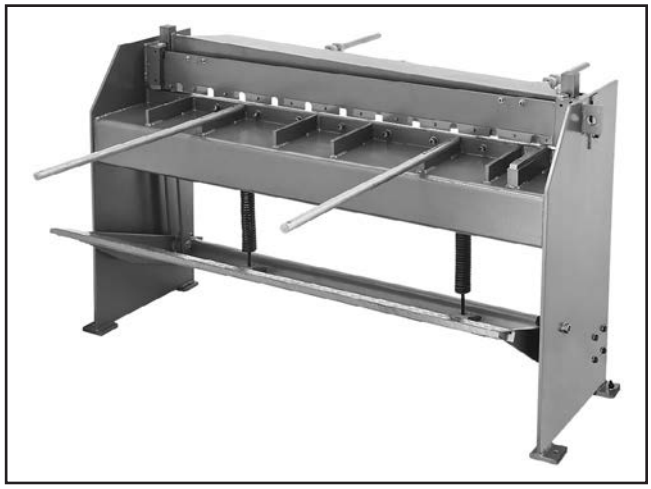

Figure 22. Model T10717 50" Deluxe Foot Shear.

T21321—Hand Punch

For repetitive hole punching, nothing beats the speed of a hand punch. With a throat depth of 6 9/32", this versatile punch can make a hole in mild steel up to 3/16" thick. Measures 5 1/2" wide by 31 1/2" tall (without handle). Approximate shipping weight: 192 lbs.

Figure 23. Model T21321 Hand Punch.

G0496—Professional English Wheel

This impressive Professional English Wheel will easily form ulta-smooth compound curves in sheet metal. Used extensively throughout the custom car and motorcycle industry and in the restoration of antique cars and airplanes whose users find this tool indispensable. While the design is nothing new, we have added wheels and anvils not even available from other suppliers allowing for the creation of flanged panels as well as interesting raised and embossed panels. Specifications: overall dimensions are 26"W x 62 3/4"H x 46"D; throat is 32 3/8"; head swivels 90°; upper flat roller size is 2 1/4"W x 6" diameter; anvil sizes are 1/8", 1/2", and 3/4" edge radius x 6" crown radius, flat with 5/16" x 1/4" steep, 1.55"W x 0.65"D groove, 0.82"W x 0.65"D groove, and 2 flat; approximate shipping weight is 496 lbs.

Figure 24. Model G0496 Profession English Wheel.

SECTION 5: MAINTENANCE

Schedule

For optimum performance from your machine, follow this maintenance schedule and refer to any specific instructions given in this section.

Daily Maintenance

- Check for loose mounting bolts.
- Check for damaged or worn clamping fingers or bending blocks.
- Lubricate clamping leaf slide shafts.
- Lubricate bending leaf pivot bushings.
- Check for any other unsafe condition.

Weekly Maintenance

- Lubricate bending leaf cam.
- Lubricate setback shafts.

Cleaning & Protecting

Use a brush to clear away any metal debris and dust from the clamping fingers, clamping base, and bending blocks.

Use a shop rag to carefully apply a thin coat of quality metal protectant (see **Page 19** for offerings from Grizzly) to all exposed unpainted surfaces to prevent corrosion.

Lubrication

Clamping Leaf Slide Shafts

Oil Type .....Grizzly T23963 or ISO 32 Equivalent
Oil Amount..... 1 or 2 Squirts
Lubrication Frequency..... Daily

The slide shaft ball oilers (see **Figure 25**) provide lubrication to the sliding surfaces between the shafts and the frame.

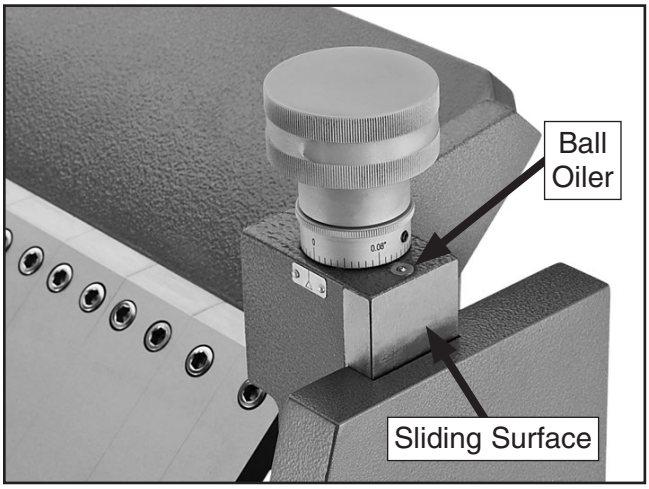

Figure 25. Clamping leaf slide shaft ball oiler.

Only lubricate these ball oilers with a pump-type oil can that has a plastic or rubberized cone tip. Do not use oil cans with a metal needle or lance tip, as they can push the ball too far into the oiler, break the spring seat, and lodge the ball in the oil galley.

When lubricating the ball oilers, first clean the outside surface to remove any dust or grime. Push the tip of the oil can nozzle against the ball oiler to create a hydraulic seal, then pump the oil can once or twice to add oil.

Bending Leaf Pivot Bushings

Oil Type .....Grizzly T23963 or ISO 32 Equivalent
Oil Amount..... 1 or 2 Squirts
Lubrication Frequency ..... Daily

The bending leaf rotates around the pivot shaft on bushings that require lubrication. Use an oil can to add lubricant to the hole shown in **Figure 26** (one on each side of the bending leaf), then raise and lower the bending leaf several times to distribute the lubricant.

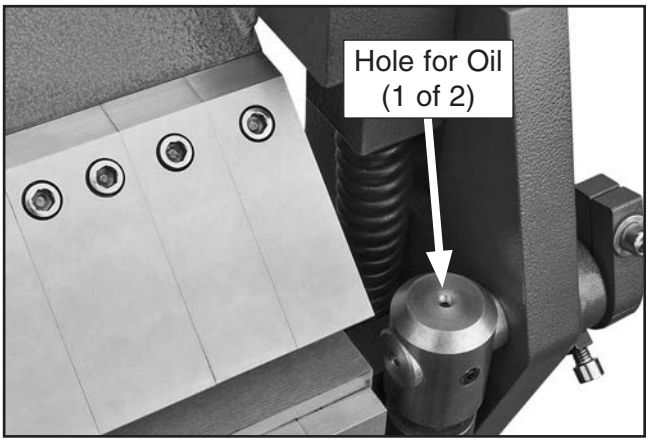

Figure 26. Hole for lubricating bending leaf pivot bushing.

Bending Leaf Cam

Grease..... Lithium Grease or NLGI#2 Equivalent
Amount .....Thin Coat
Lubrication Frequency .....Weekly

Use mineral spirits and a shop rag to clean each side of the cam (see **Figure 27**), then apply a thin coat of grease to each side. Raise and lower the bending leaf several times to distribute the lubricant.

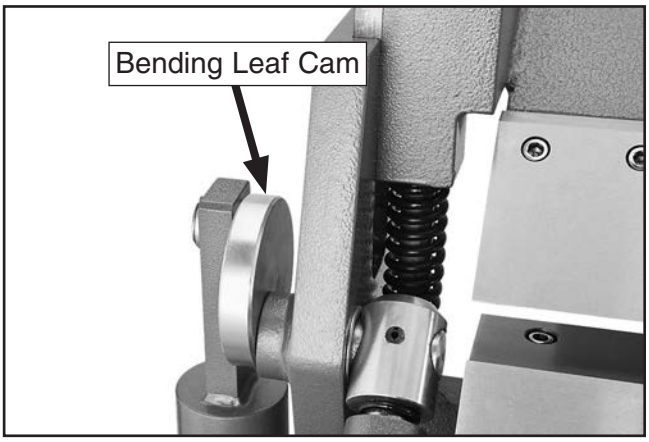

Figure 27. Bending leaf cam.

Setback Shafts

Oil Type .....Grizzly T23963 or ISO 32 Equivalent
Oil Amount..... 1 Drop at Each Location
Lubrication Frequency .....Weekly

Raise the bending leaf until it is parallel with the floor, then add one drop of oil to the setback shaft locations shown in **Figure 28**. Use the setback adjustment knobs to move the bending leaf back and forth along the shafts to distribute the lubricant.

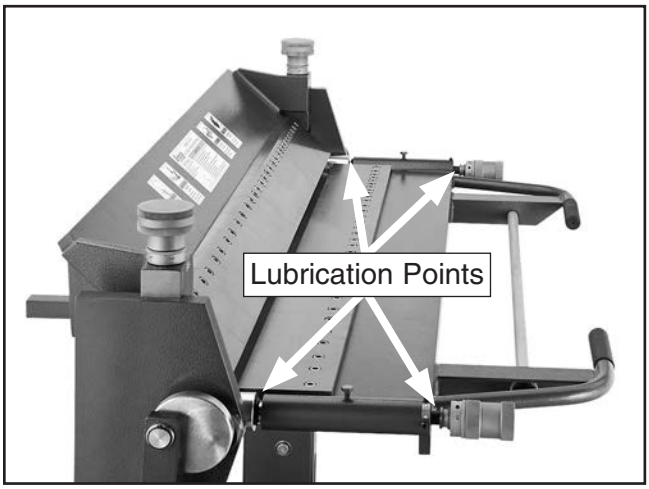

Figure 28. Setback shaft lubrication locations.

SECTION 6: TROUBLESHOOTING

Review the troubleshooting and procedures in this section if a problem develops with your machine. If you need replacement parts or additional help with a procedure, call our Technical Support. **Note:** *Please gather the serial number and manufacture date of your machine before calling.*

Symptom	Possible Cause	Possible Solution
Heavy resistance during bends.	1. Machine capacities are exceeded. 2. Not enough setback.	1. Use sheet metal that does not exceed machine capacities (**Page 4**). 2. Properly calculate and adjust setback (**Page 14**).
Bend radius is not consistent across workpiece.	1. Bending leaf not parallel with clamping leaf. 2. Clamping fingers or bending blocks not properly aligned. 3. Too much setback.	1. Adjust bending leaf parallel with clamping leaf. 2. Properly align clamping fingers and bending blocks (**Page 17**). 3. Properly calculate and adjust setback (**Page 14**).
Workpiece moves while bending.	1. Clamping pressure not correctly adjusted. 2. Not enough pressure applied with foot pedal.	1. Correctly adjust clamping pressure for workpiece thickness (**Page 15**). 2. Lock foot pedal down so clamping leaf secures workpiece.

Main

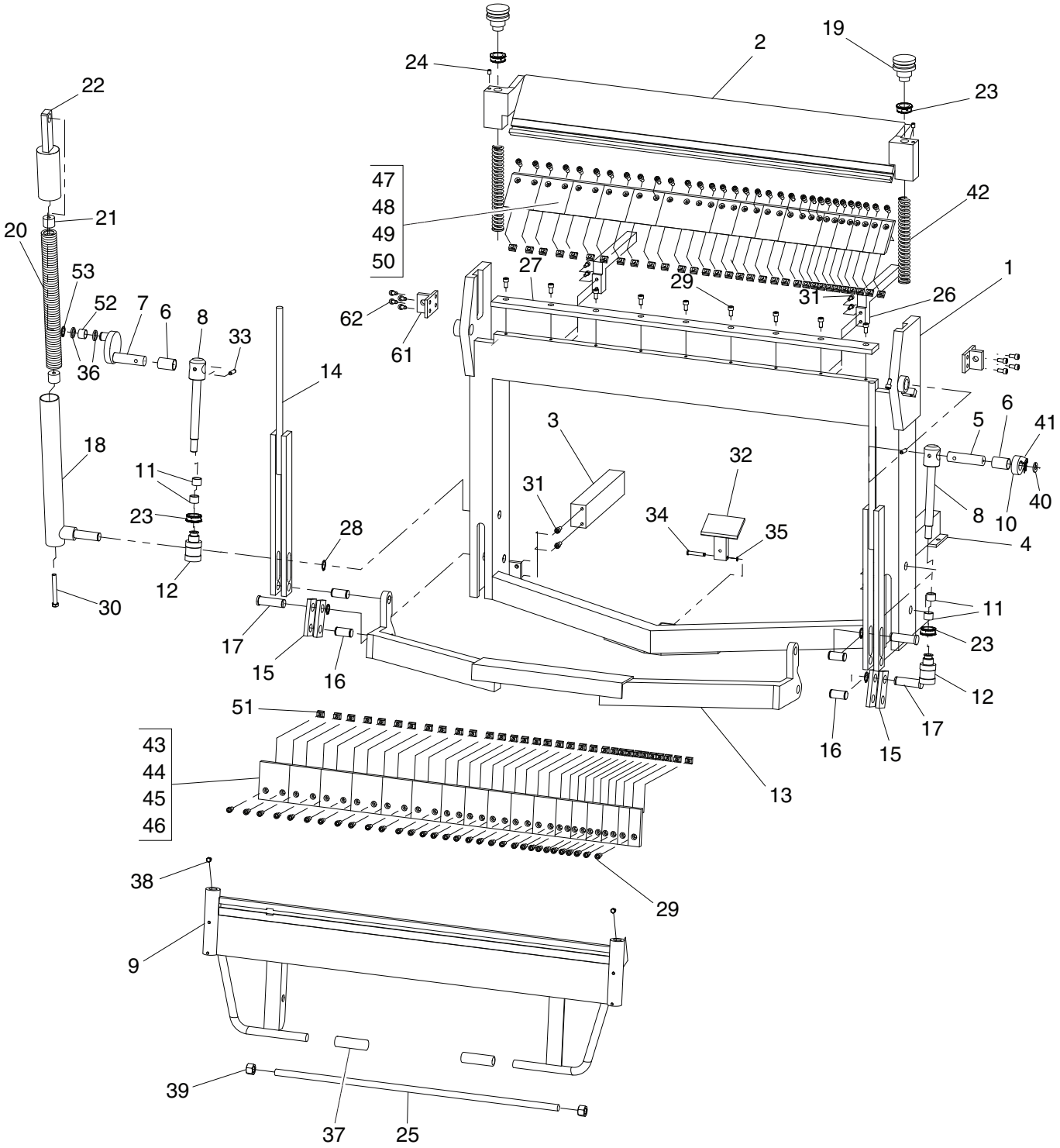

Please Note: *We do our best to stock replacement parts whenever possible, but we cannot guarantee that all parts shown here are available for purchase. Call* ***(800) 523-4777*** *or visit our online parts store at* ***www.grizzly.com*** *to check for availability.*

Main Part List

REF	PART #	DESCRIPTION
1	PT10718001	FRAME
2	PT10718002	CLAMPING LEAF
3	PT10718003	LEFT EXTENSION LEG
4	PT10718004	RIGHT EXTENSION LEG
5	PT10718005	BENDING LEAF PIN
6	PT10718006	BUSHING
7	PT10718007	BENDING LEAF CAM
8	PT10718008	SETBACK SHAFT
9	PT10718009	BENDING LEAF
10	PT10718010	BENDING STOP COLLAR
11	PT10718011	BUSHING
12	PT10718012	SETBACK ADJUSTMENT KNURLED KNOB
13	PT10718013	FOOT PEDAL
14	PT10718014	CLAMPING LEAF CONNECTOR
15	PT10718015	FOOT PEDAL PIVOT PLATE
16	PT10718016	FOOT PEDAL PIVOT PIN
17	PT10718017	FOOT PEDAL LEG PIN
18	PT10718018	CLAMPING LEAF LOWER STRUT
19	PT10718019	PRESSURE ADJUSTMENT KNURLED KNOB
20	PT10718020	CLAMPING COMPRESSION SPRING
21	PT10718021	SPRING RETAINING NUT
22	PT10718022	CLAMPING LEAF UPPER STRUT
23	PT10718023	GRADUATED DIAL
24	PT10718024	TAP-IN BALL OILER 10MM
25	PT10718025	CONNECTOR ROD
26	PT10718026	WORKPIECE SUPPORT
27	PT10718027	CLAMPING BASE
28	PT10718028	EXT RETAINING RING 25MM

REF	PART #	DESCRIPTION
29	PT10718029	CAP SCREW M10-1.5 X 20
30	PT10718030	HEX BOLT M12-1.75 X 150
31	PT10718031	CAP SCREW M8-1.25 X 20
32	PT10718032	FOOT PEDAL LOCK PLATE
33	PT10718033	ROLL PIN 10 X 40
34	PT10718034	GROOVED CLEVIS PIN
35	PT10718035	EXT RETAINING RING 10MM
36	PT10718036	SHIM RING
37	PT10718037	RUBBER HANDLE
38	PT10718038	HEX BOLT M8-1.25 X 15
39	PT10718039	HEX NUT M20-2.5
40	PT10718040	LEAF PIN RETAINER
41	PT10718041	ANGLE SCALE
42	PT10718042	LEAF COMPRESSION SPRING
43	PT10718043	BENDING BLOCK 1-1/2"
44	PT10718044	BENDING BLOCK 2"
45	PT10718045	BENDING BLOCK 3"
46	PT10718046	BENDING BLOCK 4"
47	PT10718047	CLAMPING FINGER 1-1/2"
48	PT10718048	CLAMPING FINGER 2"
49	PT10718049	CLAMPING FINGER 3"
50	PT10718050	CLAMPING FINGER 4"
51	PT10718051	T-NUT M10-1.5
52	PT10718052	BUSHING
53	PT10718053	EXT RETAINING RING 24MM
61	PT10718061	LIFTING BRACKET
62	PT10718062	CAP SCREW M8-1.25 X 20

Labels & Cosmetics

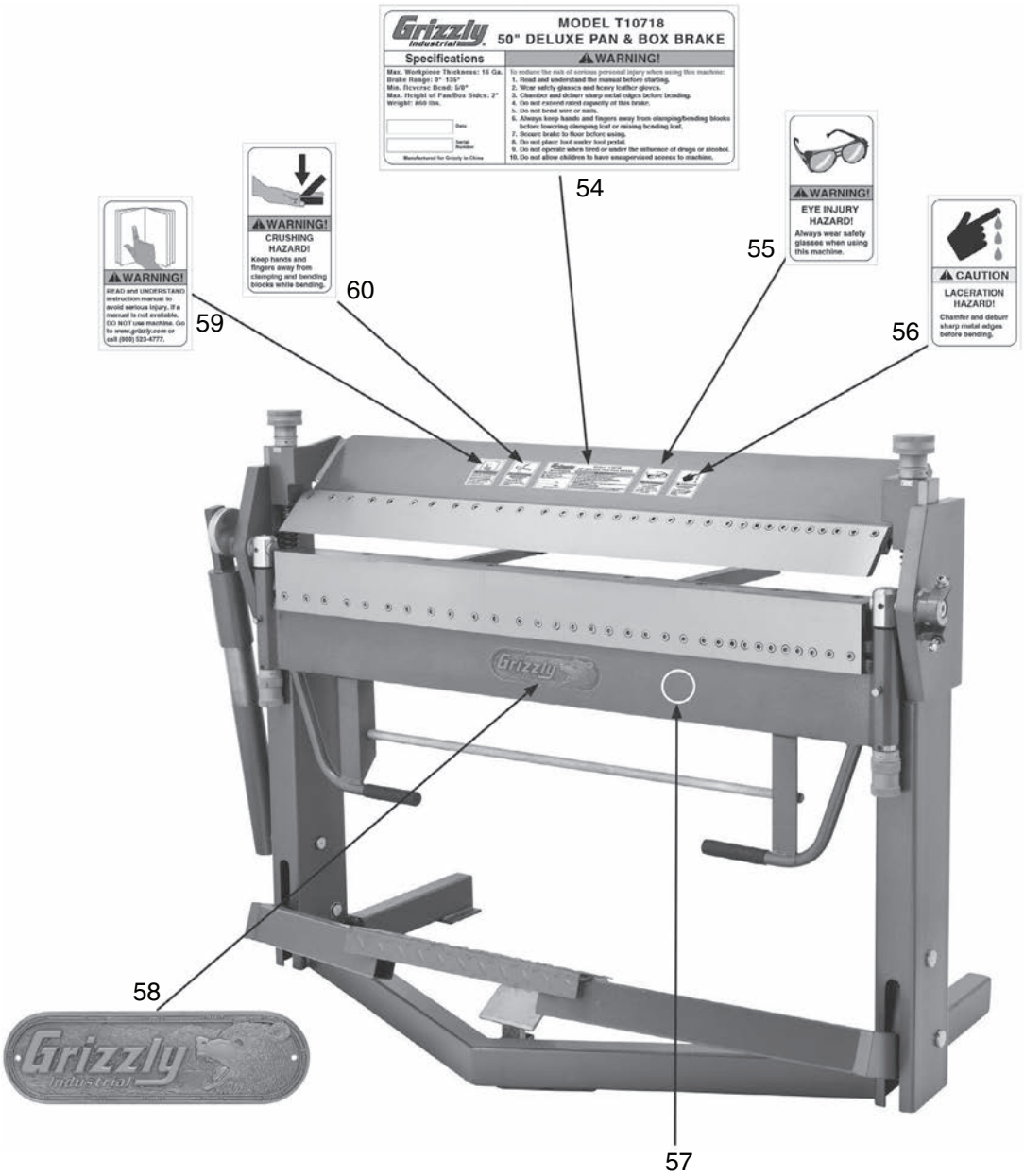

REF	PART #	DESCRIPTION
54	PT10718054	MACHINE ID LABEL
55	PT10718055	EYE INJURY HAZARD LABEL
56	PT10718056	LACERATION HAZARD LABEL
57	PT10718057	GRIZZLY GREEN TOUCH-UP PAINT

REF	PART #	DESCRIPTION
58	PT10718058	GRIZZLY OBLONG NAMEPLATE
59	PT10718059	READ MANUAL LABEL
60	PT10718060	CRUSHING HAZARD LABEL

⚠WARNING

Safety labels help reduce the risk of serious injury caused by machine hazards. If any label comes off or becomes unreadable, the owner of this machine MUST replace it in the original location before resuming operations. For replacements, contact (800) 523-4777 or www.grizzly.com.

Grizzly Industrial, Inc. WARRANTY CARD

Name _____

Street _____

City _____ State _____ Zip _____

Phone # _____ Email _____

Model # _____ Order # _____ Serial # _____

The following information is given on a voluntary basis. It will be used for marketing purposes to help us develop better products and services. ***Of course, all information is strictly confidential.***

1. How did you learn about us?

____ Advertisement ____ Friend ____ Catalog
____ Card Deck ____ Website ____ Other:

2. Which of the following magazines do you subscribe to?

____ Cabinetmaker & FDM
____ Family Handyman
____ Hand Loader
____ Handy
____ Home Shop Machinist
____ Journal of Light Cont.
____ Live Steam
____ Model Airplane News
____ Old House Journal
____ Popular Mechanics
____ Popular Science
____ Popular Woodworking
____ Precision Shooter
____ Projects in Metal
____ RC Modeler
____ Rifle
____ Shop Notes
____ Shotgun News
____ Today's Homeowner
____ Wood
____ Wooden Boat
____ Woodshop News
____ Woodsmith
____ Woodwork
____ Woodworker West
____ Woodworker's Journal
____ Other:

3. What is your annual household income?

____ $20,000-$29,000 ____ $30,000-$39,000 ____ $40,000-$49,000
____ $50,000-$59,000 ____ $60,000-$69,000 ____ $70,000+

4. What is your age group?

____ 20-29 ____ 30-39 ____ 40-49
____ 50-59 ____ 60-69 ____ 70+

5. How long have you been a woodworker/metalworker?

____ 0-2 Years ____ 2-8 Years ____ 8-20 Years ____ 20+ Years

6. How many of your machines or tools are Grizzly?

____ 0-2 ____ 3-5 ____ 6-9 ____ 10+

7. Do you think your machine represents a good value? _____Yes _____No

8. Would you recommend Grizzly Industrial to a friend? _____Yes _____No

9. Would you allow us to use your name as a reference for Grizzly customers in your area?
Note: *We never use names more than 3 times.* _____Yes _____No

10. Comments: _____

_____

_____

_____

CUT ALONG DOTTED LINE

FOLD ALONG DOTTED LINE

Place
Stamp
Here

GRIZZLY INDUSTRIAL, INC.
P.O. BOX 2069
BELLINGHAM, WA 98227-2069

FOLD ALONG DOTTED LINE

Send a Grizzly Catalog to a friend:

Name_____

Street_____

City_____State_____Zip_____

TAPE ALONG EDGES--PLEASE DO NOT STAPLE

WARRANTY & RETURNS

Grizzly Industrial, Inc. warrants every product it sells for a period of **1 year** to the original purchaser from the date of purchase. This warranty does not apply to defects due directly or indirectly to misuse, abuse, negligence, accidents, repairs or alterations or lack of maintenance. This is Grizzly's sole written warranty and any and all warranties that may be implied by law, including any merchantability or fitness, for any particular purpose, are hereby limited to the duration of this written warranty. We do not warrant or represent that the merchandise complies with the provisions of any law or acts unless the manufacturer so warrants. In no event shall Grizzly's liability under this warranty exceed the purchase price paid for the product and any legal actions brought against Grizzly shall be tried in the State of Washington, County of Whatcom.

We shall in no event be liable for death, injuries to persons or property or for incidental, contingent, special, or consequential damages arising from the use of our products.

To take advantage of this warranty, contact us by mail or phone and give us all the details. We will then issue you a "Return Number,'' which must be clearly posted on the outside as well as the inside of the carton. We will not accept any item back without this number. Proof of purchase must accompany the merchandise.

The manufacturers reserve the right to change specifications at any time because they constantly strive to achieve better quality equipment. We make every effort to ensure that our products meet high quality and durability standards and we hope you never need to use this warranty.

Please feel free to write or call us if you have any questions about the machine or the manual.

Thank you again for your business and continued support. We hope to serve you again soon.

grizzly.com®
TOOL WEBSITE

Buy Direct and Save with Grizzly® – Trusted, Proven and a Great Value!

~Since 1983~

Visit Our Website Today For Current Specials!

ORDER
24 HOURS A DAY!
1-800-523-4777

VISA MasterCard DISCOVER NOVUS AMERICAN EXPRESS