MODEL T10812
CARVING VISE
INSTRUCTIONS

For questions or help with this product contact Tech Support at (570) 546-9663 or techsupport@grizzly.com

Introduction

The Model T10812 Carving Vise mounts to a workbench to securely hold a carving project while providing highly adjustable positioning. This product comes fully assembled and ready to use.

Specifications

Height	8"
Width	7"
Base	5¼" dia.
Weight	14 lbs.
Carving Faceplate	5" dia.
Faceplate Mounting Holes	16
Range of Motion (Rotation)	360°
Construction	Cast Iron and Steel

Inventory

Your vise was carefully packaged for safe transportation. Remove the packaging materials from around your vise and inspect it. If you discover any damage, *please call us immediately at (570) 546-9663 for advice.*

Save the containers and all packing materials for possible inspection by the carrier or its agent. *Otherwise, filing a claim can be difficult.*

When you are completely satisfied with the condition of your shipment, inventory the contents.

The following is a list of items shipped with your vise. Before beginning setup, lay these items out and inventory them.

If any non-proprietary parts are missing (e.g. a nut or a washer), we will gladly replace them; or for the sake of expediency, replacements can be obtained at your local hardware store.

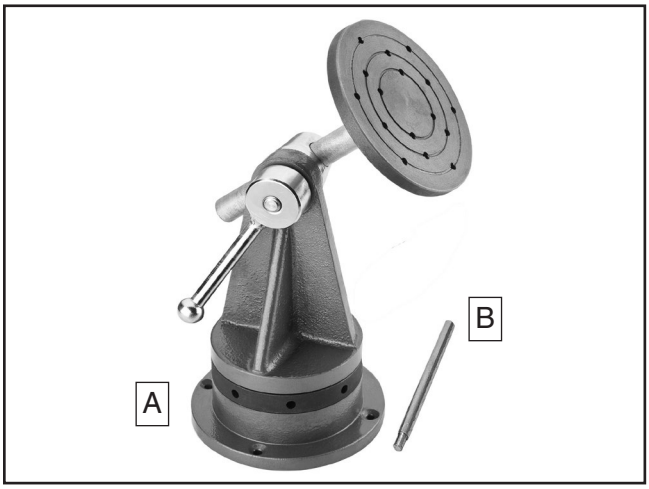

Figure 1. T10812 carving vise.

Description	Qty
A. Carving Vise	1
B. Pin Wrench	1

COPYRIGHT © DECEMBER, 2014 BY GRIZZLY INDUSTRIAL, INC.
NO PORTION OF THIS MANUAL MAY BE REPRODUCED IN ANY SHAPE OR FORM WITHOUT THE WRITTEN APPROVAL OF GRIZZLY INDUSTRIAL, INC.
#BB16757 PRINTED IN CHINA

⚠WARNING

Damage to your eyes, lungs, and ears could result from using this item without proper protective gear, such as safety glasses, a respirator, and hearing protection.

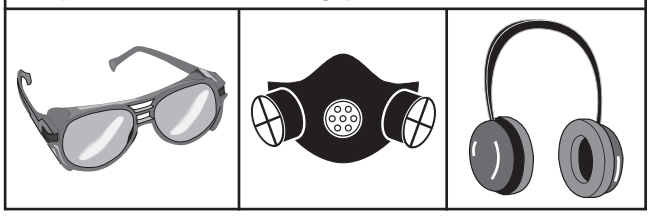

Installation

Mount the carving vise on a workbench that is sturdy enough to hold the weight of the equipment and any downward pressure that may be applied during operation.

When mounting your carving vise, remember to allow enough room so workpiece position can be fully adjusted, and to place carving vise in a well lit area.

Bench Mounting

The base of this vise has mounting holes that allow it to be fastened to a workbench or other mounting surface to prevent it from moving during operation and causing accidental injury or damage.

The strongest mounting option is a "Through Mount" where holes are drilled all the way through the workbench—and hex bolts, washers, and hex nuts are used to secure the vise in place.

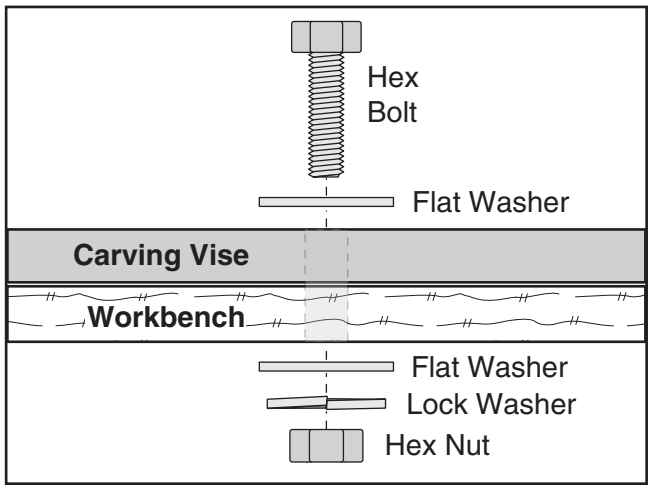

Figure 2. Typical "Through Mount" setup.

Another option is a "Direct Mount" (see example below) where the vise is secured directly to the workbench with lag screws and washers.

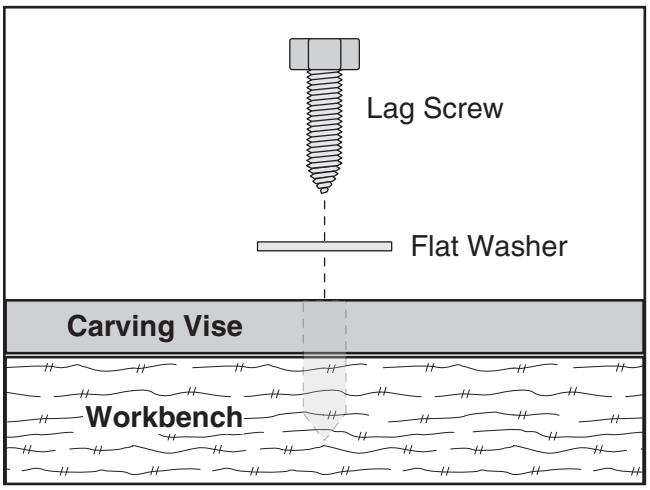

Figure 3. Typical "Direct Mount" setup.

Attaching Workpiece

The Carving Vise faceplate has 16 mounting holes to accommodate a variety of workpieces. When attaching a workpiece, use a minimum of four button head screws. Make sure the screws are long enough to provide a safe, stable work surface, but will not interfere with carving activities.

⚠CAUTION

Avoid placing hands close to pinch points located at clamping assembly and retaining collar. Serious injury may occur.

Refer to **Figure 4** to become familiar with the names and locations of the controls and features.

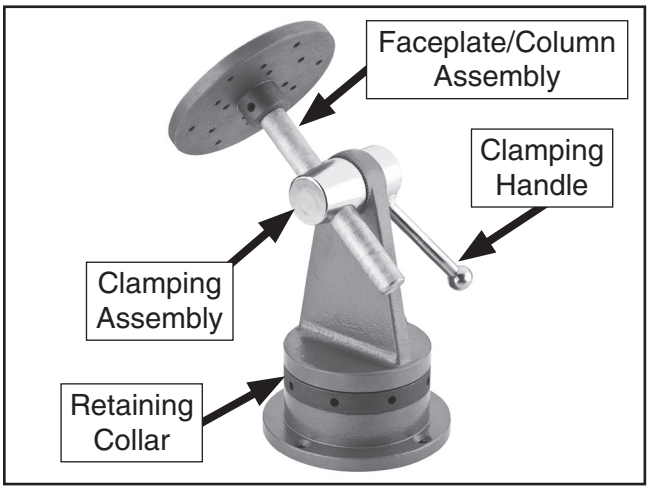

Figure 4. T10812 part identification.

To attach workpiece to faceplate:

1. While holding faceplate, loosen clamping handle (see **Figure 4**).

2. Remove faceplate/column assembly from clamping assembly.

3. Locate appropriate position for workpiece on faceplate.

4. Select at least four mounting holes and mark through faceplate onto workpiece with sharp pencil.

   Note: *Mounting points should be placed evenly across workpiece to avoid stress that could cause screws to break.*

5. Pre-drill holes in workpiece slightly smaller in diameter than mounting screws.

6. Position faceplate on workpiece and attach with button head wood screws.

NOTICE

DO NOT use screws with tapered heads to attach the faceplate because they could split the faceplate, or the screws could snap off during operation. See the illustration in Figure 5 for examples.

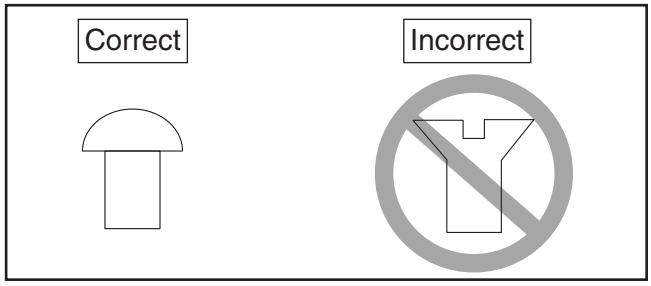

Figure 5. Correct screw type for faceplate attachment.

7. With workpiece securely attached to faceplate, re-install faceplate/column assembly into clamping assembly.

8. Tighten clamping handle.

   Note: *When carving small, narrow, or oddly shaped workpieces, it may be necessary to attach an intermediate base to faceplate providing a larger, more stable work area for workpiece.*

Adjusting Tilt and Height

1. While holding faceplate, loosen clamping handle (see **Figure 4**).

2. Position workpiece.

3. Tighten clamping handle.

Adjusting Rotation

1. Insert pin wrench into retaining collar (see **Figure 6).**

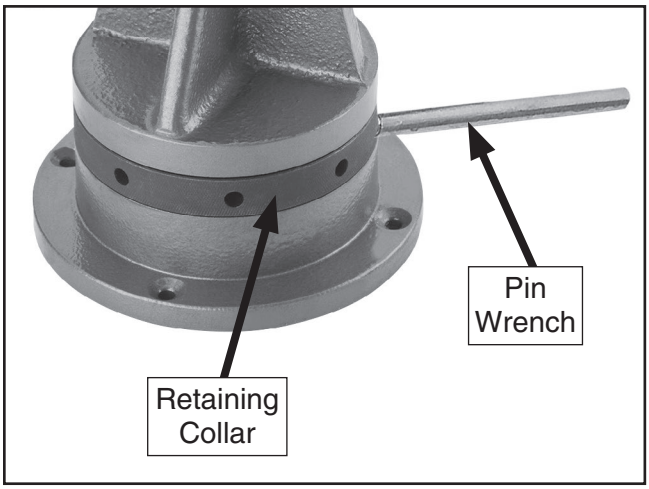

Figure 6. Insert pin wrench.

2. Turn retaining collar counterclockwise until the vise rotates freely.

3. Position workpiece.

4. Turn retaining collar clockwise until snug.

5. Remove pin wrench and store in safe place.

T10812 Parts Breakdown

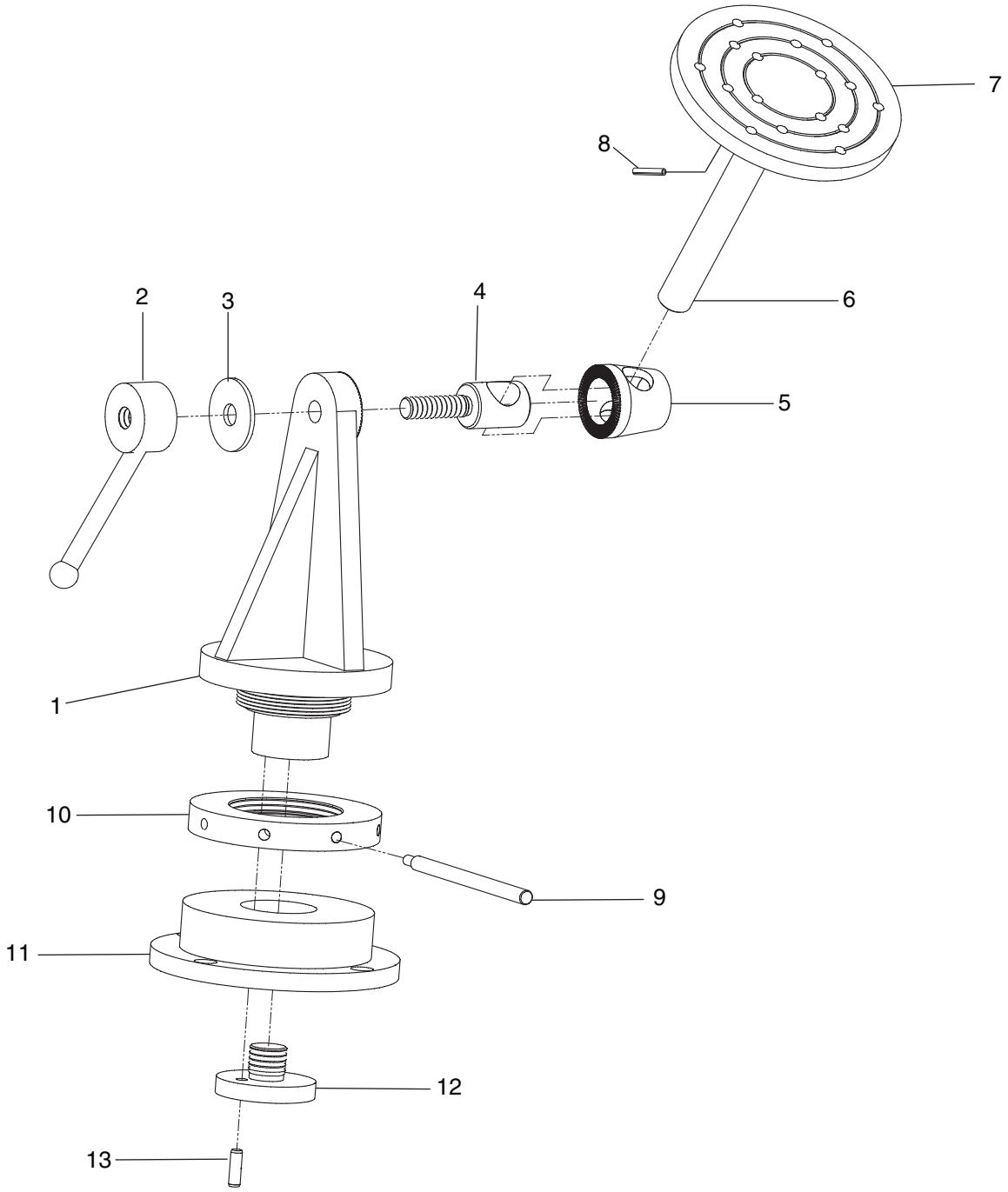

REF	PART #	DESCRIPTION
1	PT10812001	VISE BODY
2	PT10812002	LOCKING HANDLE
3	PT10812003	FENDER WASHER 12MM
4	PT10812004	CLAMPING INSERT M12-1.75 X 40
5	PT10812005	CLAMPING SLEEVE
6	PT10812006	COLUMN
7	PT10812007	FACEPLATE

REF	PART #	DESCRIPTION
8	PT10812008	ROLL PIN 6 X 30
9	PT10812009	PIN WRENCH
10	PT10812010	RETAINING COLLAR
11	PT10812011	VISE BASE
12	PT10812012	VISE BASE PLATE
13	PT10812013	PIN 6 X 20MM