MODEL W1829
6" JOINTER

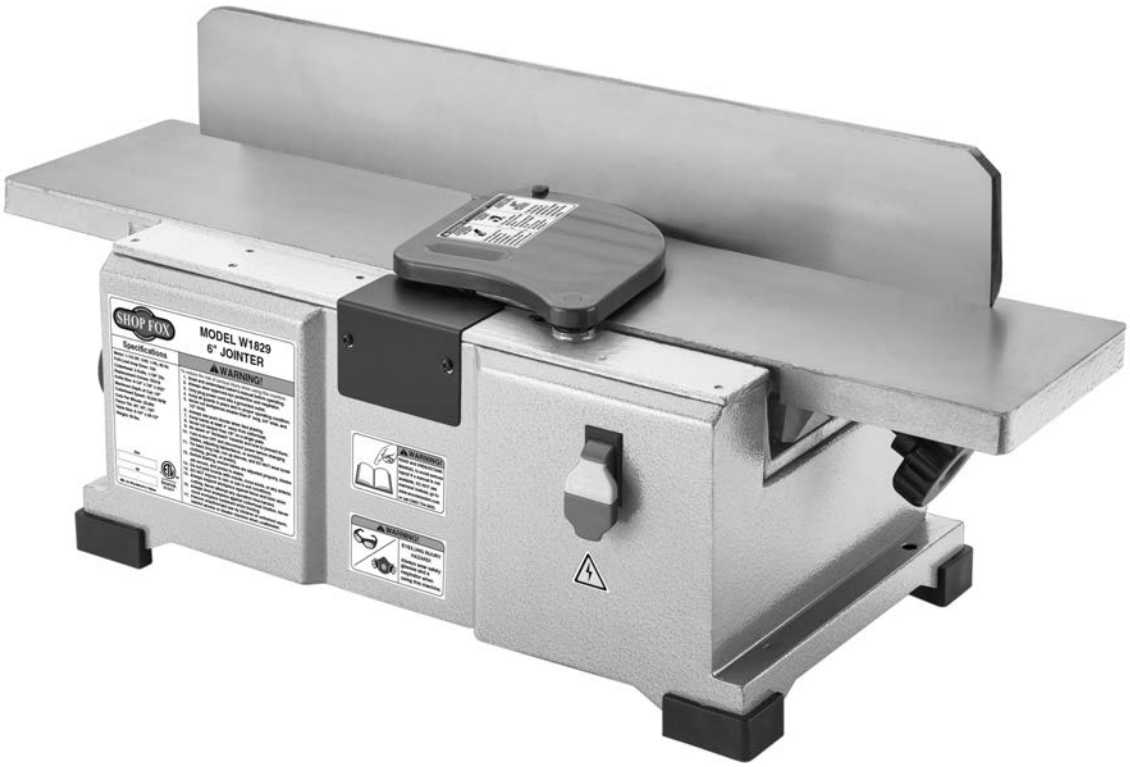

Intertek
5012917

OWNER'S MANUAL

(FOR MODELS MANUFACTURED SINCE 2/20)

Phone: (360) 734-3482 · Online Technical Support: techsupport@woodstockint.com

V3.03.20

#14362KN Printed in Taiwan

⚠ WARNING!

This manual provides critical safety instructions on the proper setup, operation, maintenance, and service of this machine/tool. Save this document, refer to it often, and use it to instruct other operators.

Failure to read, understand and follow the instructions in this manual may result in fire or serious personal injury—including amputation, electrocution, or death.

The owner of this machine/tool is solely responsible for its safe use. This responsibility includes but is not limited to proper installation in a safe environment, personnel training and usage authorization, proper inspection and maintenance, manual availability and comprehension, application of safety devices, cutting/sanding/grinding tool integrity, and the usage of personal protective equipment.

The manufacturer will not be held liable for injury or property damage from negligence, improper training, machine modifications or misuse.

⚠ WARNING!

Some dust created by power sanding, sawing, grinding, drilling, and other construction activities contains chemicals known to the State of California to cause cancer, birth defects or other reproductive harm. Some examples of these chemicals are:

- **Lead from lead-based paints.**
- **Crystalline silica from bricks, cement and other masonry products.**
- **Arsenic and chromium from chemically-treated lumber.**

Your risk from these exposures varies, depending on how often you do this type of work. To reduce your exposure to these chemicals: Work in a well ventilated area, and work with approved safety equipment, such as those dust masks that are specially designed to filter out microscopic particles.

Contents

USE THE QUICK GUIDE PAGE LABELS TO SEARCH OUT INFORMATION FAST!

INTRODUCTION

Woodstock Technical Support

This machine has been specially designed to provide many years of trouble-free service. Close attention to detail, ruggedly built parts and a rigid quality control program assure safe and reliable operation.

Woodstock International, Inc. is committed to customer satisfaction. Our intent with this manual is to include the basic information for safety, setup, operation, maintenance, and service of this product.

We stand behind our machines! In the event that questions arise about your machine, please contact Woodstock International Technical Support at (360) 734-3482 Ext. 2 or send e-mail to: **techsupport@woodstockint.com**. Our knowledgeable staff will help you troubleshoot problems and process warranty claims.

If you need the latest edition of this manual, you can download it from **http://www.woodstockint.com/manuals**.
If you have comments about this manual, please contact us at:

Woodstock International, Inc.
Attn: Technical Documentation Manager
P.O. Box 2309
Bellingham, WA 98227
Email: manuals@woodstockint.com

About Your Machine

The W1829 6" Jointer is a benchtop machine; its compact size makes for convenient placement in any shop. It mounts and dismounts quickly to a workbench making it portable when necessary.

It is primarily used to produce straight, flat faces on a workpiece, in order to properly square the material for further layout, construction and joining.

MACHINE SPECIFICATIONS

MODEL W1829
6" BENCHTOP JOINTER

Product Dimensions

Weight..... 64 lbs.
Width (side-to-side) x Depth (front-to-back) x Height..... 29-1/2 x 19-3/4 x 12-1/2 in.
Footprint (Length x Width)..... 18-7/8 x 11 in.

Shipping Dimensions

Type..... Cardboard Box
Content..... Machine
Weight..... 69 lbs.
Length x Width x Height..... 32 x 15 x 11 in.

Electrical

Power Requirement..... 110V, Single-Phase, 60 Hz
Full-Load Current Rating..... 12A
Minimum Circuit Size..... 15A
Connection Type..... Cord & Plug
Power Cord Included..... Yes
Power Cord Length..... 8 ft.
Power Cord Gauge..... 16 AWG
Plug Included..... Yes
Included Plug Type..... 5-15
Switch Type..... ON/OFF Push Button Switch w/Large Shut-Off Paddle

Motors

Main

Horsepower..... 1.5 HP
Phase..... Single-Phase
Amps..... 12A
Speed..... 20,000 RPM
Type..... Universal
Power Transfer ..... Belt Drive
Bearings..... Shielded & Permanently Lubricated

Main Specifications

Main Specifications

Bevel Jointing..... 0 – 45 deg. L/R
Maximum Width of Cut..... 6 in.
Maximum Depth of Cut..... 1/8 in.
Minimum Workpiece Length..... 8 in.
Minimum Workpiece Thickness..... 1/2 in.
Number of Cuts Per Minute..... 20,000

Fence Information

Fence Length..... 22-7/8 in.
Fence Width..... 3/4 in.
Fence Height..... 4-5/16 in.
Fence Stops..... 45, 90, 135 deg.

Cutterhead Information

Cutterhead Type..... 2 Knife
Cutterhead Diameter..... 1-7/8 in.
Cutterhead Speed..... 10,000 RPM

Knife Information

Number of Knives..... 2
Knife Type..... HSS, Single-Sided
Knife Length..... 6-1/4 in.
Knife Width..... 7/8 in.
Knife Thickness..... 3/32 in.
Knife Adjustment..... Jack Screws

Table Information

Table Length..... 28-1/2 in.
Table Width..... 6-1/4 in.
Table Thickness..... 1/4 in.
Table Adjustment Type..... Knob
Table Movement Type..... Swing

Construction

Base..... Pre-formed Steel
Body Assembly..... Pre-formed Steel
Fence Assembly..... Cast Iron
Guard..... Stamped Steel
Table..... Precision-Ground Cast Iron
Paint Type/Finish..... Powder Coated

Other Information

Number of Dust Ports..... 1
Dust Port Size..... 2-1/2 in.

Other

Country of Origin ..... Taiwan
Warranty ..... 2 Years
Approximate Assembly & Setup Time ..... 30 Minutes
Certified by a Nationally Recognized Testing Laboratory (NRTL) ..... Yes

Features

45 Degree Inward, 90 and 45 Degree Outward Stops
Jack Screw Knife Adjustment
2-1/2" Dust Port
2 Safety Push Blocks
Dust Collection Fan, Chute and Bag

Identification

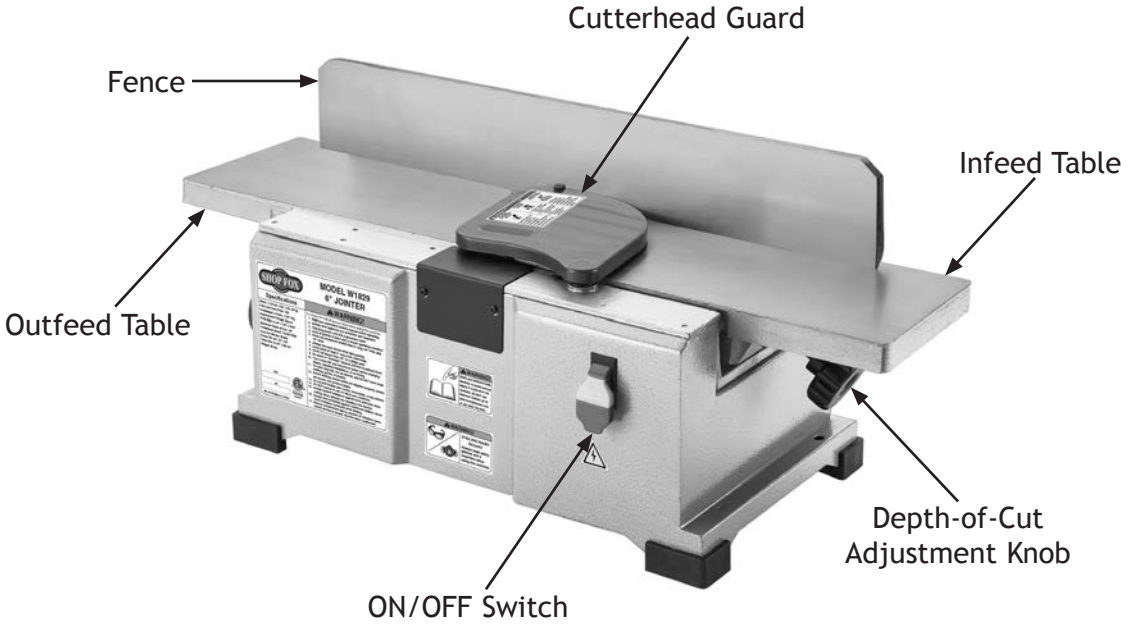

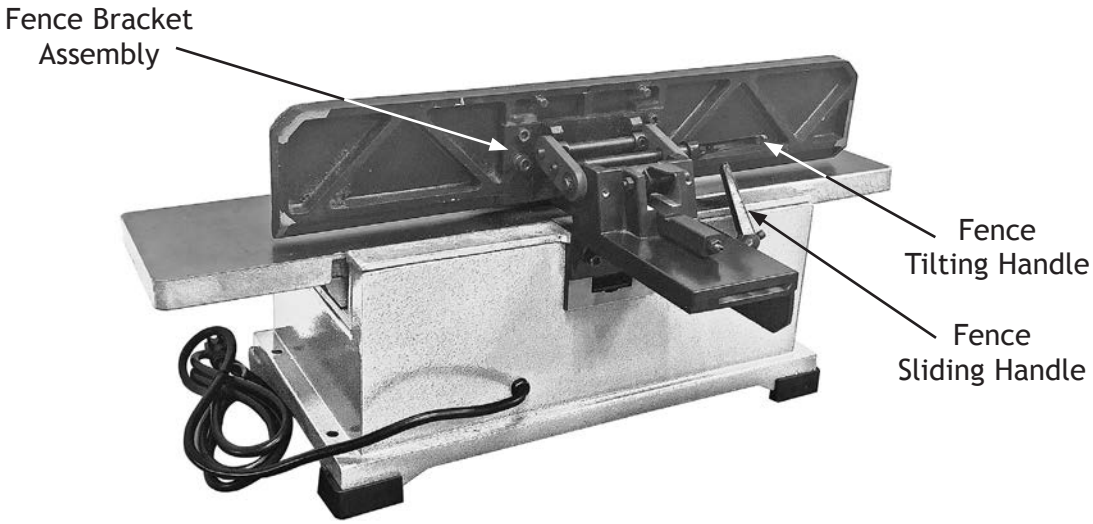

⚠WARNING

For Your Own Safety, Read Instruction Manual Before Operating Jointer

a) **Wear eye protection.**
b) **Always keep cutterhead and drive guards in place and proper operating condition.**
c) **Always use hold down/push blocks for jointing material narrower than 3 inches, or planing material thinner than 3 inches.**
d) **Never perform jointing or planing on pieces shorter than 8 inches.**

Controls & Components

This section covers the basic parts and controls used during routine operations. Refer to **Figures 1-2** for basic parts and control locations.

A. Outfeed Table: Supports the workpiece after it passes over the cutterhead.

B. Cutterhead Guard: Shields the cutterhead for operator safety during operation. The cutterhead guard is under spring tension—it must (unless blocked) snap forward to hit the fence. DO NOT operate the jointer if the guard is not functioning properly.

C. Fence: The fence guides the workpiece uniformly over the cutterhead at the desired angle.

D. Infeed Table: Supports the workpiece as it is pushed over the cutterhead. The height of the infeed table relative to the cutterhead determines the depth of the cut.

E. Depth-of-Cut Adjustment Knob: This knob adjusts the height of the infeed table to control the depth of cut. Best results are achieved by limiting the maximum depth to 1/8" when edge jointing and 1/32" when surface planing. You can set the depth of cut precisely with this adjustment knob. To determine the depth of stock the cutterhead will remove from your workpiece, place a straightedge across the outfeed table and use a ruler to measure the gap between the straightedge and the infeed table.

F. ON/OFF Switch: This paddle switch starts and stops the cutterhead rotation. The switch has a yellow safety key—removing it locks the switch in the OFF position. Always remove this yellow key when leaving the work area. This prevents unsupervised persons in your shop (especially children) from starting the jointer.

G. Fence Bracket Assembly: The various parts of this assembly let you change the position of the fence relative to the tables and secure it in position during operation.

H. Fence Tilting Handle: Lets you change the angle of the fence and lock it at the angle desired. The fence can be quickly set to 90° (perpendicular to the tables), 45° inward, and 45° outward by setting and using the fence stops on the bracket assembly.

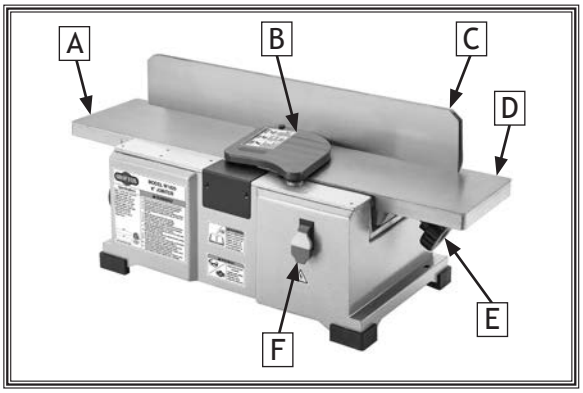

Figure 1. W1829 basic controls (front).

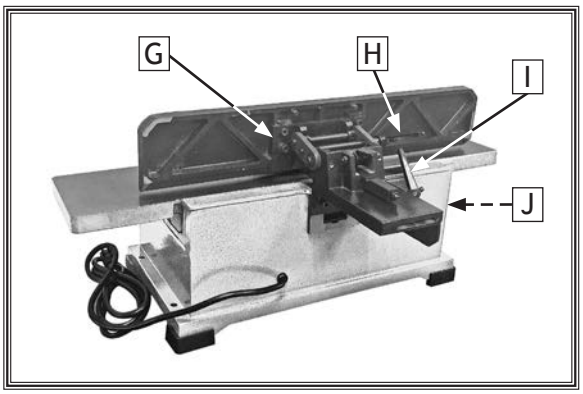

Figure 2. W1829 basic controls (rear).

I. Fence Sliding Handle: Allows you to adjust the position of the fence over the tables. ALWAYS tighten it before you begin operations. The position of the fence determines the width of the cut as the workpiece moves over the cutterhead. NEVER operate the jointer if ANY part of cutterhead is exposed on the work area.

J. Dust Collection Chute and Bag: This assembly collects debris from the workpiece as it is cut. The internal fan—powered by the motor—pulls debris away from the cutterhead and blows it through the chute into the bag.

SAFETY

For Your Own Safety, Read Manual Before Operating Machine

The purpose of safety symbols is to attract your attention to possible hazardous conditions. This manual uses a series of symbols and signal words intended to convey the level of importance of the safety messages. The progression of symbols is described below. Remember that safety messages by themselves do not eliminate danger and are not a substitute for proper accident prevention measures—this responsibility is ultimately up to the operator!

DANGER — **Indicates an imminently hazardous situation which, if not avoided, WILL result in death or serious injury.**

WARNING — **Indicates a potentially hazardous situation which, if not avoided, COULD result in death or serious injury.**

CAUTION — **Indicates a potentially hazardous situation which, if not avoided, MAY result in minor or moderate injury.**

NOTICE — **This symbol is used to alert the user to useful information about proper operation of the equipment or a situation that may cause damage to the machinery.**

Standard Machinery Safety Instructions

OWNER'S MANUAL. Read and understand this owner's manual BEFORE using machine.

TRAINED OPERATORS ONLY. Untrained operators have a higher risk of being hurt or killed. Only allow trained/supervised people to use this machine. When machine is not being used, disconnect power, remove switch keys, or lock-out machine to prevent unauthorized use—especially around children. Make workshop kid proof!

DANGEROUS ENVIRONMENTS. Do not use machinery in areas that are wet, cluttered, or have poor lighting. Operating machinery in these areas greatly increases the risk of accidents and injury.

MENTAL ALERTNESS REQUIRED. Full mental alertness is required for safe operation of machinery. Never operate under the influence of drugs or alcohol, when tired, or when distracted.

ELECTRICAL EQUIPMENT INJURY RISKS. You can be shocked, burned, or killed by touching live electrical components or improperly grounded machinery. To reduce this risk, only allow an electrician or qualified service personnel to do electrical installation or repair work, and always disconnect power before accessing or exposing electrical equipment.

DISCONNECT POWER FIRST. Always disconnect machine from power supply BEFORE making adjustments, changing tooling, or servicing machine. This eliminates the risk of injury from unintended startup or contact with live electrical components.

EYE PROTECTION. Always wear ANSI-approved safety glasses or a face shield when operating or observing machinery to reduce the risk of eye injury or blindness from flying particles. Everyday eyeglasses are not approved safety glasses.

WEARING PROPER APPAREL. Do not wear clothing, apparel, or jewelry that can become entangled in moving parts. Always tie back or cover long hair. Wear non-slip footwear to avoid accidental slips, which could cause loss of workpiece control.

HAZARDOUS DUST. Dust created while using machinery may cause cancer, birth defects, or long-term respiratory damage. Be aware of dust hazards associated with each workpiece material, and always wear a NIOSH-approved respirator to reduce your risk.

HEARING PROTECTION. Always wear hearing protection when operating or observing loud machinery. Extended exposure to this noise without hearing protection can cause permanent hearing loss.

REMOVE ADJUSTING TOOLS. Tools left on machinery can become dangerous projectiles upon startup. Never leave chuck keys, wrenches, or any other tools on machine. Always verify removal before starting!

INTENDED USAGE. Only use machine for its intended purpose—never make modifications without prior approval from Woodstock International. Modifying machine or using it differently than intended will void the warranty and may result in malfunction or mechanical failure that leads to serious personal injury or death!

AWKWARD POSITIONS. Keep proper footing and balance at all times when operating machine. Do not overreach! Avoid awkward hand positions that make workpiece control difficult or increase the risk of accidental injury.

CHILDREN & BYSTANDERS. Keep children and bystanders at a safe distance from the work area. Stop using machine if they become a distraction.

GUARDS & COVERS. Guards and covers reduce accidental contact with moving parts or flying debris—make sure they are properly installed, undamaged, and working correctly.

FORCING MACHINERY. Do not force machine. It will do the job safer and better at the rate for which it was designed.

NEVER STAND ON MACHINE. Serious injury may occur if machine is tipped or if the cutting tool is unintentionally contacted.

STABLE MACHINE. Unexpected movement during operation greatly increases risk of injury or loss of control. Before starting, verify machine is stable and mobile base (if used) is locked.

USE RECOMMENDED ACCESSORIES. Consult this owner's manual or the manufacturer for recommended accessories. Using improper accessories will increase risk of serious injury.

UNATTENDED OPERATION. To reduce the risk of accidental injury, turn machine ***OFF*** and ensure all moving parts completely stop before walking away. Never leave machine running while unattended.

MAINTAIN WITH CARE. Follow all maintenance instructions and lubrication schedules to keep machine in good working condition. A machine that is improperly maintained could malfunction, leading to serious personal injury or death.

CHECK DAMAGED PARTS. Regularly inspect machine for any condition that may affect safe operation. Immediately repair or replace damaged or mis-adjusted parts before operating machine.

MAINTAIN POWER CORDS. When disconnecting cord-connected machines from power, grab and pull the plug—NOT the cord. Pulling the cord may damage the wires inside, resulting in a short. Do not handle cord/plug with wet hands. Avoid cord damage by keeping it away from heated surfaces, high traffic areas, harsh chemicals, and wet/damp locations.

EXPERIENCING DIFFICULTIES. If at any time you experience difficulties performing the intended operation, stop using the machine! Contact Technical Support at (360) 734-3482.

Additional Safety for Jointers

Serious cuts, amputation, entanglement, or death can occur from contact with rotating cutterhead or other moving components! Flying chips from cutting operations can cause eye injuries or blindness. Workpieces or inserts/knives thrown by cutterhead (kickback) can strike nearby operator or bystanders with deadly force. To reduce the risk of serious personal injury from these hazards, operator and bystanders MUST completely heed the hazards and warnings below.

KICKBACK. Occurs when workpiece is ejected from machine at high rate of speed. Kickback injuries occur from getting struck by workpiece or hands being pulled into cutterhead. To reduce risk of kickback, only use proper workpieces, safe feeding techniques, and proper machine setup.

GUARD REMOVAL. Operating jointer without guards exposes operator to knives/inserts and other hazardous moving parts. Except when rabbeting, never operate jointer or allow it to be connected to power if any guards are removed. Turn jointer ***OFF*** and disconnect power before clearing any shavings or sawdust from around cutterhead. After rabbeting or maintenance is complete, immediately replace all guards and ensure they are properly installed/adjusted before resuming regular operations.

DULL/DAMAGED KNIVES/INSERTS. Dull or damaged knives/inserts increase risk of kickback and cause poor workpiece finish. Only use sharp, undamaged knives/inserts.

OUTFEED TABLE ALIGNMENT. Setting outfeed table too high can cause workpiece to hit table or get stuck while feeding. Setting outfeed table too low may cause workpiece to rock or shift while feeding. Both results will increase risk of kickback. Always keep outfeed table even with knives/inserts at highest point during rotation.

INSPECTING STOCK. Impact injuries or kickback may result from using improper workpieces. Thoroughly inspect and prepare workpiece before cutting. Verify workpiece is free of nails, staples, loose knots or other foreign material.

MAXIMUM CUTTING DEPTH. To reduce risk of kickback, never cut deeper than 1/8".

GRAIN DIRECTION. Jointing against the grain or end grain can increase the risk of kickback. It also requires more cutting force, which produces chatter or excessive chip out. Always joint or surface plane with the grain.

CUTTING LIMITATIONS. Cutting workpieces that do not meet minimum dimension requirements can result in kickback or accidental contact with cutterhead. Never perform jointing, planing, or rabbeting cuts on pieces smaller than specified in data sheet.

PUSH BLOCKS. Push blocks reduce risk of accidental cutterhead contact with hands. Always use push blocks when planing materials less than 3" high or wide. Never pass your hands directly over cutterhead without a push block.

WORKPIECE SUPPORT. Poor workpiece support or loss of workpiece control while feeding will increase risk of kickback or accidental contact with cutterhead. Support workpiece with fence continuously during operation. Support long stock with auxiliary table if necessary.

FEED WORKPIECE PROPERLY. Kickback or accidental cutterhead contact may result if workpiece is fed into cutterhead the wrong way. Allow cutterhead to reach full speed before feeding. Never start jointer with workpiece touching cutterhead. Always feed workpiece from infeed side to outfeed side without stopping until cut is complete. Never move workpiece backwards while feeding.

SECURE KNIVES/INSERTS. Loose knives or improperly set inserts can be thrown from cutterhead with dangerous force. Always verify knives/inserts are secure and properly adjusted before operation. Straight knives should never project more than 1/8" (0.125") from cutterhead body.

ELECTRICAL

Circuit Requirements

This machine must be connected to the correct size and type of power supply circuit, or fire or electrical damage may occur. Read through this section to determine if an adequate power supply circuit is available. If a correct circuit is not available, a qualified electrician MUST install one before you can connect the machine to power.

A power supply circuit includes all electrical equipment between the breaker box or fuse panel in the building and the machine. The power supply circuit used for this machine must be sized to safely handle the full-load current drawn from the machine for an extended period of time. (If this machine is connected to a circuit protected by fuses, use a time delay fuse marked D.)

Full-Load Current Rating

The full-load current rating is the amperage a machine draws at 100% of the rated output power. On machines with multiple motors, this is the amperage drawn by the largest motor or sum of all motors and electrical devices that might operate at one time during normal operations.

Full-Load Current Rating at 110V ..... 12 Amps

Circuit Requirements for 110V

This machine is prewired to operate on a power supply circuit that has a verified ground and meets the following requirements:

Circuit Type ..... 110V/120V, 60 Hz, Single-Phase
Circuit Size ..... 15 Amps
Plug/Receptacle ..... NEMA 5-15

⚠WARNING

The machine must be properly set up before it is safe to operate. DO NOT connect this machine to the power source until instructed to do so later in this manual.

⚠WARNING

Incorrectly wiring or grounding this machine can cause electrocution, fire, or machine damage. To reduce this risk, only an electrician or qualified service personnel should do any required electrical work on this machine.

NOTICE

The circuit requirements listed in this manual apply to a dedicated circuit—where only one machine will be running at a time. If this machine will be connected to a shared circuit where multiple machines will be running at the same time, consult with an electrician to ensure that the circuit is properly sized for safe operation.

Grounding Requirements

This machine MUST be grounded. In the event of certain types of malfunctions or breakdowns, grounding provides a path of least resistance for electric current to travel—in order to reduce the risk of electric shock.

Improper connection of the equipment-grounding wire will increase the risk of electric shock. The wire with green insulation (with/without yellow stripes) is the equipment-grounding wire. If repair or replacement of the power cord or plug is necessary, do not connect the equipment-grounding wire to a live (current carrying) terminal.

Check with a qualified electrician or service personnel if you do not understand these grounding requirements, or if you are in doubt about whether the tool is properly grounded. If you ever notice that a cord or plug is damaged or worn, disconnect it from power, and immediately replace it with a new one.

For 110V Connection

This machine is equipped with a power cord with an equipment-grounding wire and NEMA 5-15 grounding plug (see figure). The plug must only be inserted into a matching receptacle that is properly installed and grounded in accordance with local codes and ordinances.

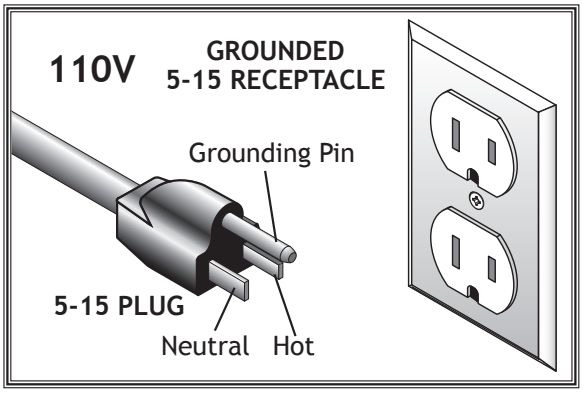

Figure 3. NEMA 5-15 plug & receptacle.

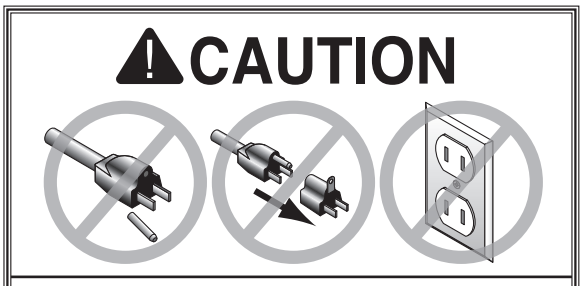

DO NOT modify the provided plug or use an adapter if the plug will not fit the receptacle. Instead, have an electrician install the proper receptacle on a power supply circuit that meets the requirements for this machine.

Extension Cords

We do not recommend using an extension cord with this machine. Extension cords cause voltage drop, which may damage electrical components and shorten motor life. Voltage drop increases with longer extension cords and smaller gauge sizes (higher gauge numbers indicate smaller sizes).

Any extension cord used with this machine must contain a ground wire, match the required plug and receptacle, and meet the following requirements:

Minimum Gauge Size at 110V ..... 14 AWG
Maximum Length (Shorter is Better) ..... 50 ft.

SETUP

Unpacking

This machine has been carefully packaged for safe transportation. If you notice the machine has been damaged during shipping, please contact your authorized Shop Fox dealer immediately.

Items Needed for Setup

The following items are needed, but not included, to set up your machine.

Description	Qty
• Safety Glasses for Each Person	1
• Degreaser or Solvent for Cleaning	Varies
• Disposable Rags for Cleaning	Varies
• Straightedge	1
• Assistant for Lifting	1
• Phillips Head Screwdriver #2	1

WARNING

This machine presents serious injury hazards to untrained users. Read through this entire manual to become familiar with the controls and operations before starting the machine!

WARNING

Wear safety glasses during entire setup process!

WARNING

USE helpers or power lifting equipment to lift this machine. Otherwise, serious personal injury may occur.

Inventory

The following is a description of the main components shipped with the Model W1829. Lay the components out to inventory them.

Note: *If you can't find an item on this list, check the mounting location on the machine or examine the packaging materials carefully. Occasionally we pre-install certain components for safer shipping.*

Inventory (Figures 4-5)		Qty
A.	Jointer Bed Assembly	1
B.	Fence	1
C.	Dust Collection Bag	1
D.	Limit Block	1
E.	Push Blocks	2
F.	Fence Tilting Handle	1
G.	Fence Bracket Assembly	1
H.	T-Handle Torx Driver T-30	1
I.	Fence Sliding Handle	1
J.	Fence Support	1
K.	Locking Plate Assembly	1
L.	Dust Chute	1
M.	Dust Collection Bag Clamp	1
N.	T-Handle Hex Wrench 4mm	1
O.	Hex Wrench 6mm	1
P.	Hex Wrench 5mm	1

Hardware and Tools (Not shown)

—Cap Screws M8-1.25 x 20	2
—Lock Washers 8mm	2
—Cap Screws M6-1 x 20	2
—Lock Washers 6mm	2

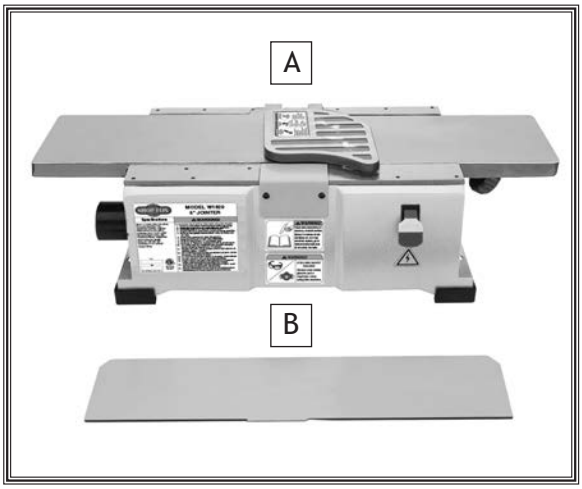

Figure 4. Large components.

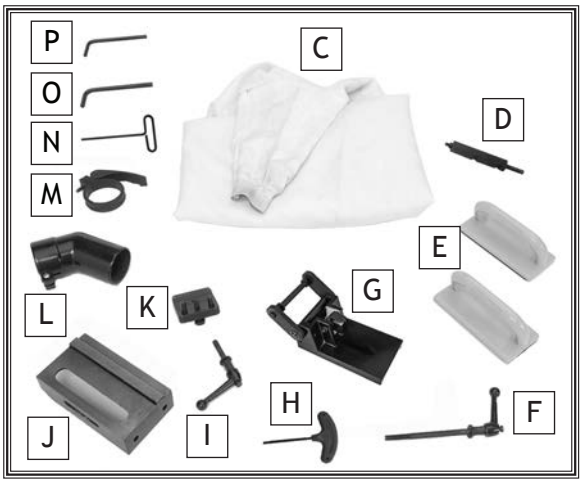

Figure 5. Small components.

SETUP

Machine Placement

Workbench Load

Refer to the **Machine Specifications** for the weight and footprint specifications of your machine. Some workbenches may require additional reinforcement to support the weight of the machine and workpiece materials.

Placement Location

Consider anticipated workpiece sizes and additional space needed for auxiliary stands, work tables, or other machinery when establishing a location for this machine in the shop. Below is the minimum amount of space needed for the machine.

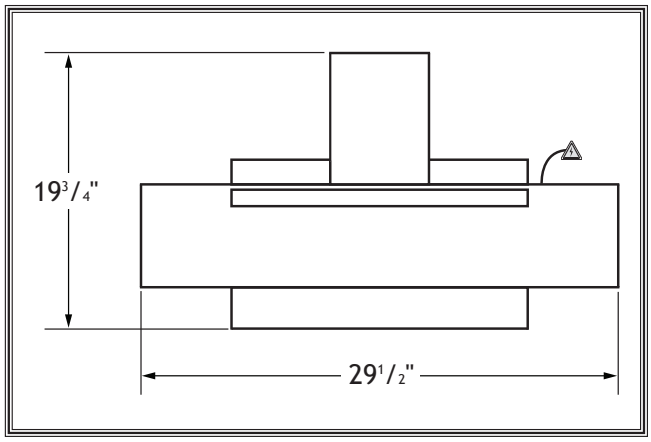

Figure 6. Machine dimensions.

CAUTION

INJURY HAZARD! Untrained users can injure themselves with this machine. Restrict access to machine when you are away, especially if it is installed where children are present.

Cleaning Machine

The unpainted surfaces of your machine are coated with a heavy-duty rust preventative that prevents corrosion during shipment and storage. This rust preventative works extremely well, but it will take a little time to clean.

Be patient and do a thorough job cleaning your machine. The time you spend doing this now will give you a better appreciation for the proper care of your machine's unpainted surfaces.

There are many ways to remove this rust preventative, but the following steps work well in a wide variety of situations. Always follow the manufacturer's instructions with any cleaning product you use and make sure you work in a well-ventilated area to minimize exposure to toxic fumes.

Before cleaning, gather the following:

- Disposable rags
- Cleaner/degreaser (WD•40 works well)
- Safety glasses & disposable gloves
- Plastic paint scraper (optional)

Basic steps for removing rust preventative:

1. Put on safety glasses.
2. Coat the rust preventative with a liberal amount of cleaner/degreaser, then let it soak for 5–10 minutes.
3. Wipe off the surfaces. If your cleaner/degreaser is effective, the rust preventative will wipe off easily. If you have a plastic paint scraper, scrape off as much as you can first, then wipe off the rest with the rag.
4. Repeat **Steps 2-3** as necessary until clean, then coat all unpainted surfaces with a quality metal protectant to prevent rust.

NOTICE

Avoid chlorine-based solvents, such as acetone or brake parts cleaner, that may damage painted surfaces.

Bench Mounting

Number of Mounting Holes..... 4
Diameter of Mounting Hardware Needed.....3/8"

The base of this machine has mounting holes that allow it to be fastened to a workbench or other mounting surface to prevent it from moving during operation and causing accidental injury or damage.

The strongest mounting option is a "Through Mount" (see example) where holes are drilled all the way through the workbench—and hex bolts, washers, and hex nuts are used to secure the machine in place.

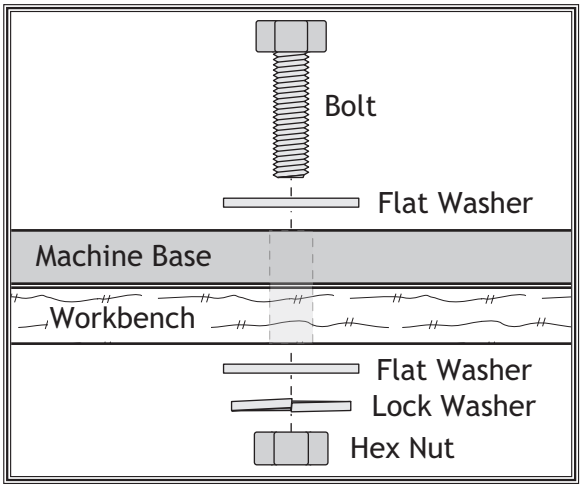

Figure 7. Typical "Through Mount" setup.

Another option is a "Direct Mount" (see example) where the machine is secured directly to the workbench with lag screws and washers.

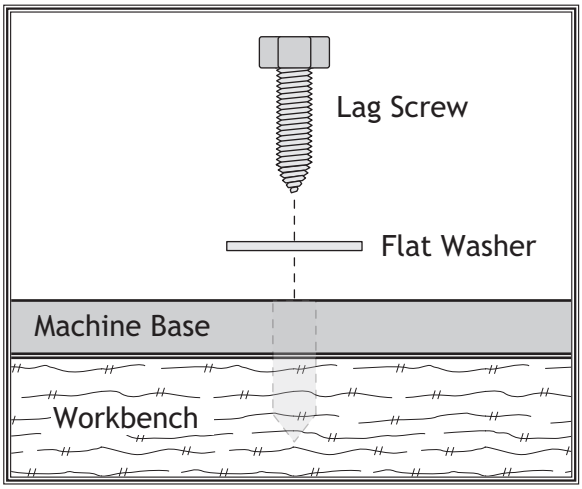

Figure 8. Typical "Direct Mount" setup.

Assembly

Before beginning the assembly process, refer to **Items Needed for Setup** and gather everything you need. Ensure all parts have been properly cleaned of any heavy-duty rust-preventative applied at the factory (if applicable). Be sure to complete all steps in the assembly procedure prior to performing the **Test Run** or connecting the machine to power.

To assemble the jointer, do these steps:

1. Use two M8-1.25 x 20 cap screws and 8mm lock washers to attach fence support to jointer bed, as shown in **Figure 9**.

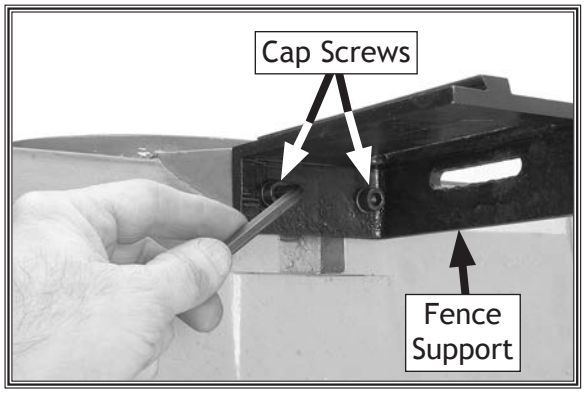

Figure 9. Attaching the fence support.

2. Insert the locking plate assembly into the fence support, positioning it so the two pins are against the bottom edge of the fence support, as shown in **Figure 10**.

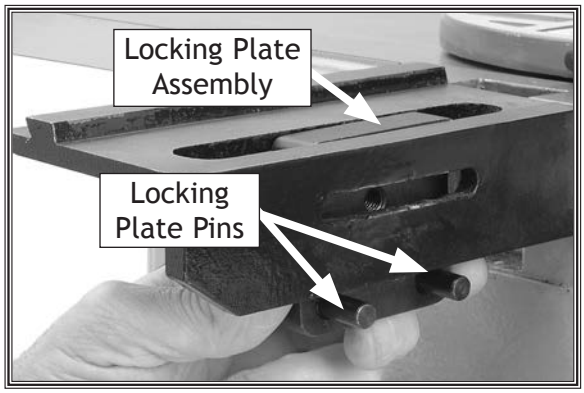

Figure 10. Inserting the locking plate.

3. Secure the locking plate in position with the fence sliding handle, as shown in **Figure 11**.

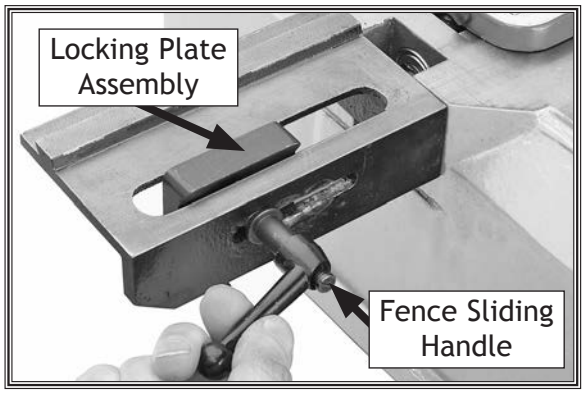

Figure 11. Installing fence sliding handle.

4. Use the remaining four M8-1.25 x 20 cap screws and 8mm lock washers to attach the fence to the fence bracket assembly, as shown in **Figure 12**.

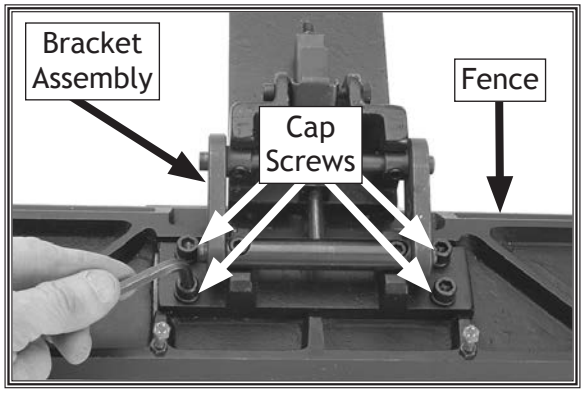

Figure 12. Attaching the fence bracket assembly to the fence.

SETUP

5. Slide the fence bracket assembly over and onto the dovetail of the support and locking plate, as shown in **Figure 13**.

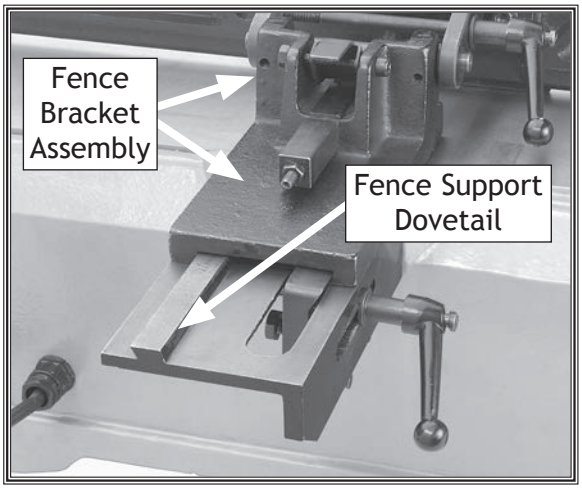

Figure 13. Sliding the fence bracket onto the fence support dovetails.

6. Install the fence tilting handle by screwing the handle shaft into the bracket assembly, as shown in **Figure 14**.

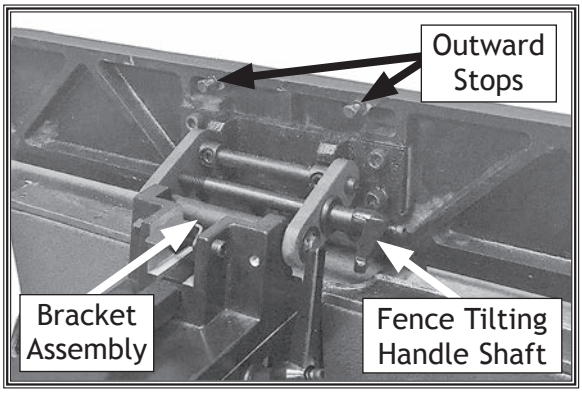

Figure 14. Fence tilting handle installed.

7. Slide the fence forward until it contacts the cutterhead guard and the cutterhead guard completely covers the cutterhead, as shown in **Figure 15.**

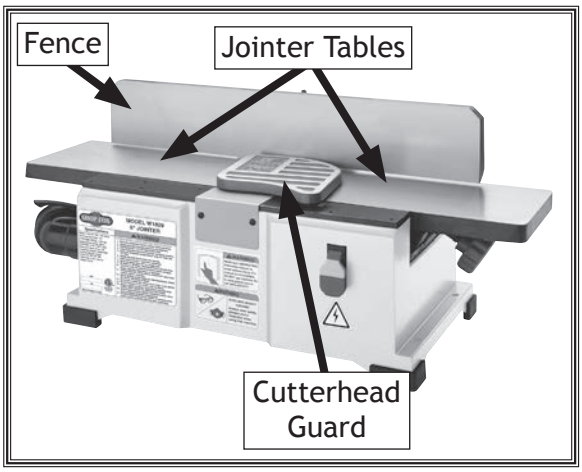

Figure 15. Fence positioned over the jointer tables.

SETUP

Dust Collection

The W1829 has a built-in dust collection fan and chip exhaust. It also includes a 2.5" dust port, clamp, and dust collection bag. The W1829 can also be hooked up to a pre-existing dust collection system.

Recommended CFM at Dust Port: ..... 150 CFM

Do not confuse this CFM recommendation with the rating of the dust collector. To determine the CFM at the dust port, you must consider these variables: (1) CFM rating of the dust collector, (2) hose type and length between the dust collector and the machine, (3) number of branches or wyes, and (4) amount of other open lines throughout the system. Explaining how to calculate these variables is beyond the scope of this manual. Consult an expert or purchase a good dust collection "how-to" book.

To install dust port and collection bag, do these steps:

1. Install the dust port to the chip exhaust, as shown in **Figure 16.**

2. Slip the bag clamp over the collection bag, then attach the collection bag to the dust port and clamp it in place, as shown in **Figure 17**.

Figure 16. Installing the dust port.

Figure 17. Attaching the dust collection bag.

⚠ CAUTION

This machine creates substantial amounts of dust during operation. Breathing airborne dust on a regular basis can result in permanent respiratory illness. Reduce your risk by wearing a respirator and capturing the dust with a dust collection system.

Recommended Adjustments

For your convenience, the adjustments listed below have been performed at the factory and no further setup is required to operate your machine.

However, because of the many variables involved with shipping, we recommend that you at least verify the following adjustments to ensure the best possible results from your new machine.

Step-by-step instructions for these adjustments can be found in **Service** on **Page 30**.

1. Knife settings (see **Page 32**).

2. Fence stop accuracy (see **Page 35**).

Power Connection

After you have completed all previous setup instructions and circuit requirements, the machine is ready to be connected to the power supply.

To avoid unexpected startups or property damage, use the following steps whenever connecting or disconnecting the machine.

Connecting Power

1. Turn the machine power switch **OFF**.

2. Insert the power cord plug into a matching power supply receptacle, as shown in **Figure 18**. The machine is now connected to the power source.

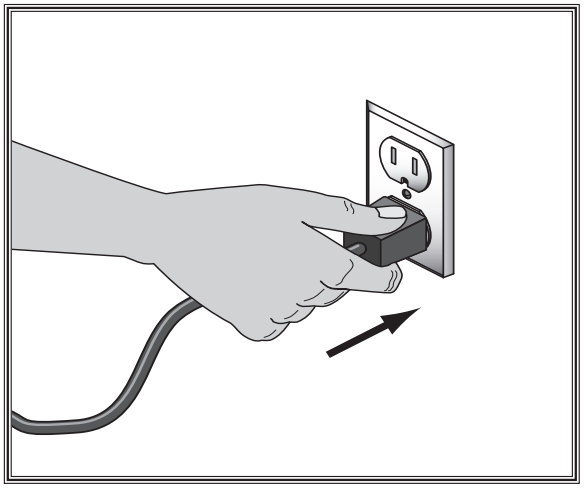

Figure 18. Connecting power

Disconnecting Power

1. Turn the machine power switch **OFF**.

2. Grasp the molded plug and pull it completely out of the power supply receptacle, as shown in **Figure 19**. DO NOT pull by the cord as this may damage the wires inside.

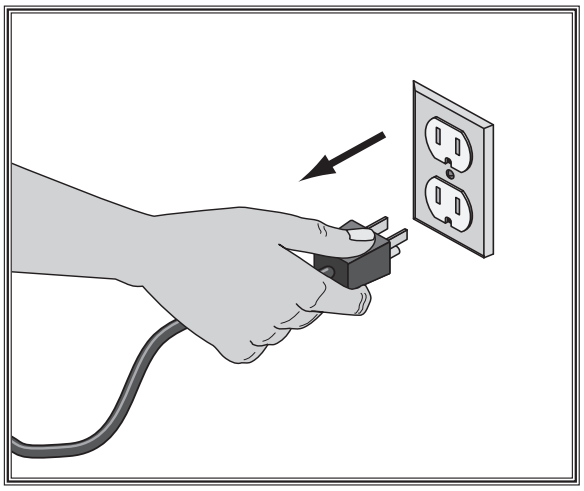

Figure 19. Disconnecting power.

Test Run

Once assembly is complete, test run the machine to ensure it is properly connected to power and safety components are functioning properly.

If you find an unusual problem during the test run, immediately stop the machine, disconnect it from power, and fix the problem BEFORE operating the machine again. The **Troubleshooting** table in the **SERVICE** section of this manual can help.

The Test Run consists of verifying the following: 1) The motor powers up and runs correctly, and 2) the switch disabling key disables the switch properly.

To test run the machine, do these steps:

1. Clear all setup tools away from machine.

2. Connect machine to power supply.

3. Turn machine ***ON***, verify motor operation, then turn machine ***OFF***.

   The motor should run smoothly and without unusual noises.

4. Remove switch disabling key (see example).

5. Try to start machine with paddle switch. The machine should not start.

   — If machine *does not* start, the switch disabling feature is working as designed.

   — If machine *does* start, immediately stop the machine. The switch disabling feature is not working correctly. This safety feature must work properly before proceeding with regular operations. Call Tech Support for help.

⚠WARNING

Serious injury or death can result from using this machine BEFORE understanding its controls and related safety information. DO NOT operate, or allow others to operate, machine until the information is understood.

⚠WARNING

DO NOT start machine until all preceding setup instructions have been performed. Operating an improperly set up machine may result in malfunction or unexpected results that can lead to serious injury, death, or machine/property damage.

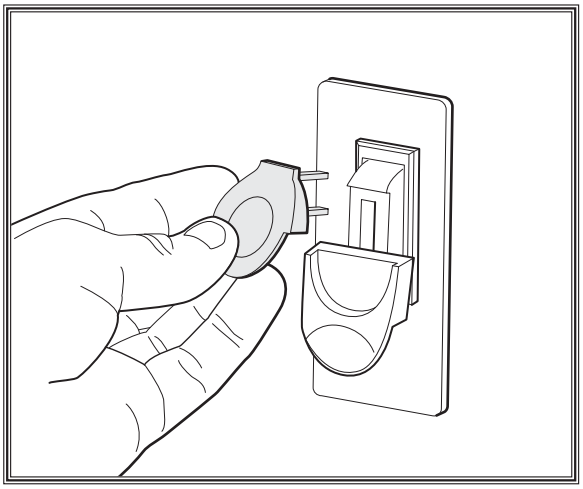

Figure 20. Removing switch key from paddle switch.

SETUP

OPERATIONS

General

This machine will perform many types of operations that are beyond the scope of this manual. Many of these operations can be dangerous or deadly if performed incorrectly.

The instructions in this section are written with the understanding that the operator has the necessary knowledge and skills to operate this machine. If at any time you are experiencing difficulties performing any operation, stop using the machine!

The overview below provides the novice machine operator with a basic understanding of how the machine is used during operation, so the machine controls/components discussed later in this manual are easier to understand. Due to its generic nature, this overview is **NOT** intended to be an instructional guide.

To complete a typical operation with the jointer, the operator does the following:

1. Examines workpiece to verify it is safe and suitable for jointing.
2. Adjusts fence for width of workpiece and locks it in place.
3. Adjusts fence tilt, if necessary.
4. Adjusts infeed table height to set depth of cut per pass.
5. Ensures cutterhead guard position and operation are functioning properly.
6. Puts on safety glasses, respirator, and any other required protective equipment.
7. Starts jointer.
8. Using push blocks as needed, holds workpiece firmly against infeed table and fence, and feeds workpiece into cutterhead at a steady and controlled rate until entire length of workpiece has been cut and it clears the cutterhead on the outfeed table side.

WARNING

To reduce your risk of serious injury or damage to the machine, read this entire manual BEFORE using machine.

WARNING


To reduce the risk of eye injury and long-term respiratory damage, always wear safety glasses and a respirator while operating this machine.

NOTICE

If you are an inexperienced operator, we strongly recommend that you read books or trade articles, or seek training from an experienced operator of this type of machinery before performing unfamiliar operations. Above all, safety must come first!

9. Repeats cutting process described above until desired results are achieved.
10. Stops jointer.

Stock Inspection & Requirements

Here are some rules to follow when choosing and jointing stock:

- **DO NOT joint or surface plane stock that contains loose knots.** Injury to the operator or damage to the workpiece can occur if the knots become dislodged during the cutting operation.

- **DO NOT joint or surface plane against the grain direction.** Cutting against the grain increases the likelihood of stock kickback, as well as tear-out on the workpiece.

- **Jointing and surface planing with the grain produces a better finish and is safer for the operator.** Cutting with the grain is described as feeding the stock on the jointer so the grain points down and toward you as viewed on the edge of the stock (see **Figure 21**).

  Note: *If the grain changes direction along the edge of the board, decrease the cutting depth and make additional passes.*

- **Remove foreign objects from the stock**. Make sure that any stock you process with the jointer is clean and free of any dirt, nails, staples, tiny rocks or any other foreign objects that may damage the jointer blades.

- **Only process natural wood fiber through your jointer.** Never joint MDF, particle board, plywood, laminates or other synthetically made materials.

- **Make sure all stock is sufficiently dried before jointing.** Wood with a moisture content over 20% will cause unnecessary wear on the knives and poor cutting results.

- **DO NOT joint stock that is excessively warped or twisted.**

- **Make sure your workpiece exceeds the minimum dimension requirements (see Figures 22-23) before edge jointing or surface planing, or it may break or kick back during the operation!**

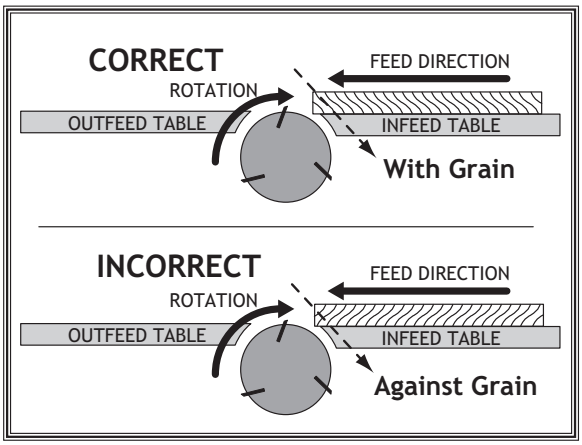

Figure 21. Correct setting for grain alignment.

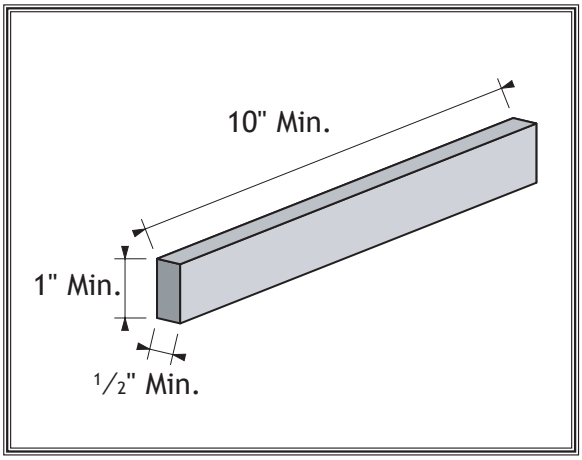

Figure 22. Minimum dimensions for edge jointing.

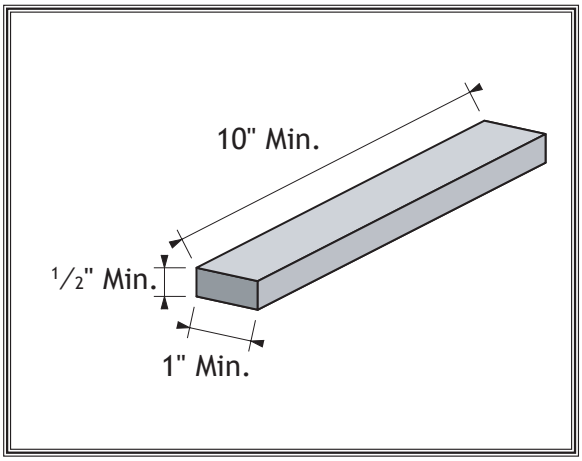

Figure 23. Minimum dimensions for surface planing.

Squaring Stock

Squaring stock involves four steps performed in the order below:

1. **Surface Plane on the Jointer**: The concave face of the workpiece is surface planed flat with the jointer (see **Figure 24**).

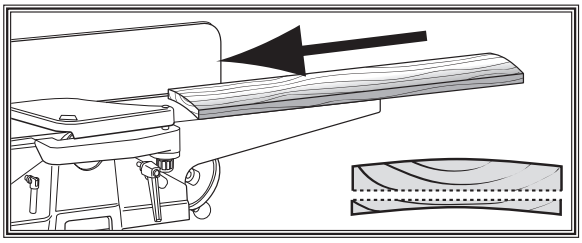

Figure 24. Surface plane on the jointer.

2. **Surface Plane on a Thickness Planer**: The opposite face of the workpiece is surface planed flat with a thickness planer (see **Figure 25**).

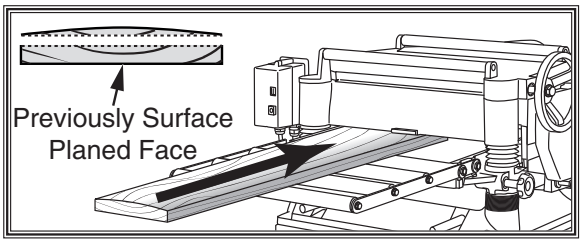

Figure 25. Surface plane on a thickness planer.

3. **Edge Joint on the Jointer**: The concave edge of the workpiece is jointed flat with the jointer (see **Figure 26**).

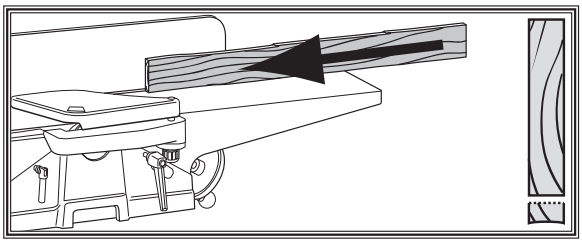

Figure 26. Edge joint on the jointer.

4. **Rip Cut on a Table Saw**: The jointed edge of the workpiece is placed against a table saw fence and the opposite edge cut off (see **Figure 27**).

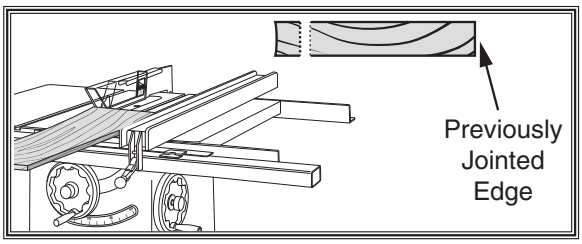

Figure 27. Rip cut on a table saw.

Surface Planing

The purpose of surface planing on the jointer is to make one flat face on a piece of stock (see **Figures 28–29**) to prepare it for surface planing on a thickness planer.

NOTICE

If you are not experienced with a jointer, set the depth of cut to 0", and practice feeding the workpiece across the tables as described below. This procedure will better prepare you for the actual operation.

Figure 28. Typical surface planing operation.

To surface plane on the jointer, do these steps:

1. Read and understand **SAFETY**, beginning on **Page 7**.

2. Make sure your stock has been inspected for dangerous conditions as described in the **Stock Inspection & Requirements** instructions on **Page 22.**

3. Set the cutting depth for your operation. (We suggest 1/32" for surface planing, using a more shallow depth for hard wood species or for wide stock.)

4. Make sure your fence is set to 90˚.

5. If your workpiece is cupped (warped), place it so the concave side is face down on the surface of the infeed table.

6. Start the jointer.

7. With a push block in each hand, press the workpiece against the table and fence with firm pressure, and feed the workpiece over the cutterhead (see **Figure 28**).

   Note: *When your leading hand (with push block) gets within 4" of the cutterhead, lift it up and over the cutterhead, and place the push block on the portion of the workpiece that is on the outfeed table. Now, focus your pressure on the outfeed end of the workpiece while feeding, and repeat the same action with your trailing hand when it gets within 4" of the cutterhead. To keep your hands safe, DO NOT let them get closer than 4" from the cutterhead when it is moving!*

8. Repeat **Step 7** until the entire surface is flat.

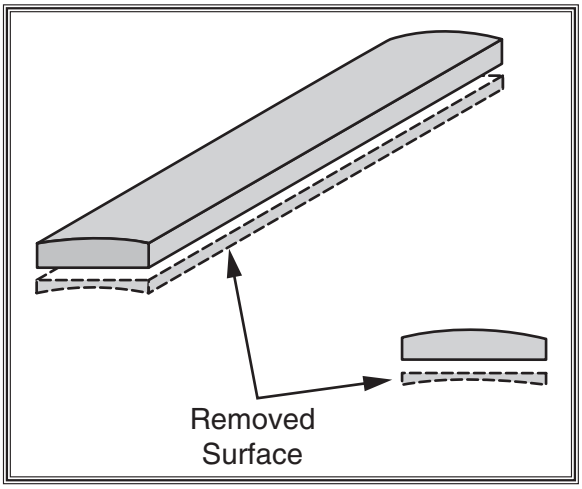

Figure 29. Illustration of surface planing results.

⚠WARNING

Failure to use push blocks when surface planing may result in cutterhead contact, which will cause serious personal injury. Always use push blocks to protect your hands when surface planing on the jointer.

Edge Jointing

The purpose of edge jointing is to produce a finished, flat-edged surface that is suitable for joinery or finishing (see **Figure 30**). It is also a necessary step when squaring rough or warped stock.

To edge joint on the jointer, do these steps:

1. Read and understand **SAFETY** on **Page 7**.

2. Inspect your stock for dangerous conditions as described in the **Stock Inspection & Requirements** instructions on **Page 22**.

3. Set the cutting depth for your operation.

   Note: *Between 1/16" and 1/8" for edge jointing, using a more shallow depth for certain species or for wide stock.*

4. Make sure the fence is set to 90˚.

5. If your workpiece is bowed (warped), place it so the concave side is face down on the surface of the infeed table.

6. Start the jointer.

7. Press the workpiece against the table and fence with firm pressure. Use your trailing hand to guide the workpiece through the cut, and feed the workpiece over the cutterhead (see **Figure 31**).

   Note: *If your leading hand gets within 4" of the cutterhead, lift it up and over the cutterhead, and place it on the portion of the workpiece that is over the outfeed table. Focus your pressure on the outfeed end of the workpiece while feeding, and repeat the same action with your trailing hand if it gets within 4" of the cutterhead. Keep your hands safe—DO NOT let them get closer than 4" from the cutterhead!*

8. Repeat **Step 7** until the entire edge is flat.

NOTICE

If you are not experienced with a jointer, set the depth of cut to 0", and practice feeding the workpiece across the tables as described below. This procedure will better prepare you for the actual operation.

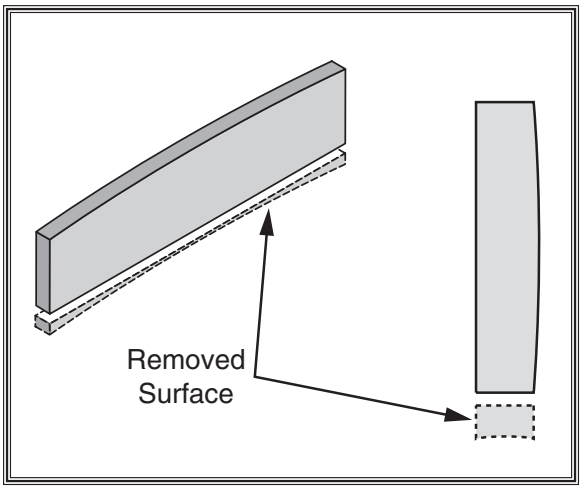

Figure 30. Illustration of edge jointing results.

Figure 31. Typical edge jointing operation.

OPERATIONS

Bevel Cutting

The purpose of bevel cutting is to cut a specific angle into the edge of a workpiece (see **Figure 32**).

The Model W1829 has preset fence stops at 45° inward, 90°, and 45° outward (135°). If your situation requires a different angle, the preset fence stops can be easily adjusted for your needs.

To bevel cut on the jointer, do these steps:

1. Read and understand **SAFETY**, beginning on **Page 7**.

2. Make sure your stock has been inspected for dangerous conditions as described in the **Stock Inspection & Requirements** instructions on **Page 22**.

3. Set the cutting depth for your operation.

   Note: *We suggest between 1/16" and 1/8" for bevel cutting, using a more shallow depth for hard wood species or for wide stock.*

4. Make sure your fence is set to the angle of your desired cut.

5. If your workpiece is cupped (warped), place it so the concave side toward the fence.

6. Start the jointer.

7. With a push block in your leading hand, press the workpiece against the table and fence with firm pressure, and feed the workpiece over the cutterhead, as in **Figure 33**.

   Note: *If your leading hand gets within 4" of the cutterhead, lift it up and over the cutterhead, and place the push block on the portion of the workpiece that is on the outfeed table. Now, focus your pressure on the outfeed end of the workpiece while feeding, and repeat the same action with your trailing hand when it gets within 4" of the cutterhead. To keep your hands safe, DO NOT let them get closer than 4" from the cutterhead when it is moving!*

8. Repeat **Step 7** until the angled cut is satisfactory to your needs.

NOTICE

If you are not experienced with a jointer, set the depth of cut to 0", and practice feeding the workpiece across the tables as described below. This procedure will better prepare you for the actual operation.

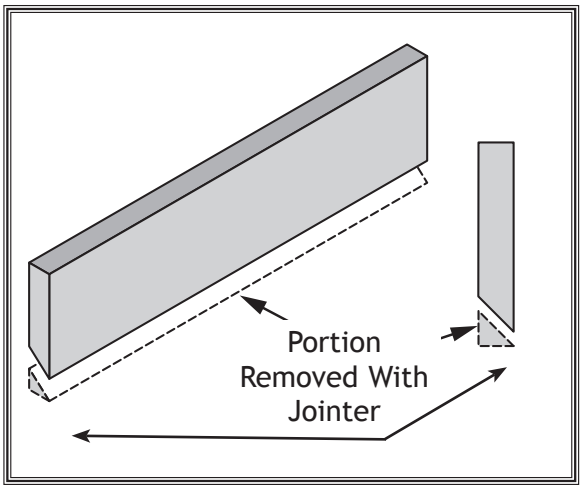

Figure 32. Illustration of bevel cutting results.

Figure 33. Typical bevel cutting operation.

OPERATIONS

ACCESSORIES

Jointer Accessories

The following jointer accessories may be available through your local Woodstock International Inc. Dealer. If you do not have a dealer in your area, these products are also available through online dealers. Please call or e-mail Woodstock International Inc. Customer Service to get a current listing of dealers at: 1-800-840-8420 or at sales@woodstockint.com.

D3319—6" Jointer Blades
These blades are made of high-speed steel, and are designed as direct replacements for the Shop Fox® W1829 Jointer. Set of 2.

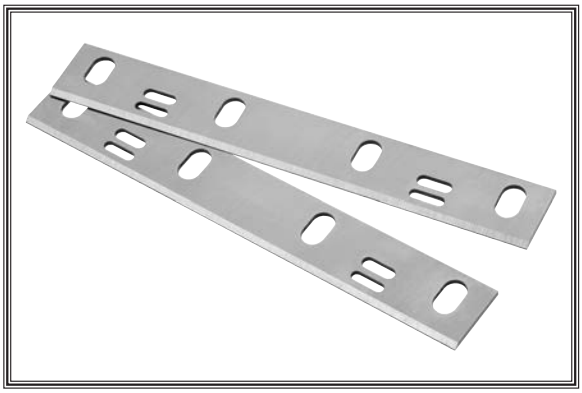

D3640—Shop Fox Tool Table Plus
This new tool table plus was designed to answer customer requests for a slightly wider and taller table. It is built to accommodate a variety of bench-top machines including the W1829 Jointer.

D1123—Steelex® Knife Sharpener
Add a razor hone to your planer and jointer knives with this hand-held sharpening device. This handy tool sharpens flat and beveled surfaces quickly and easily. Great for touch-ups.

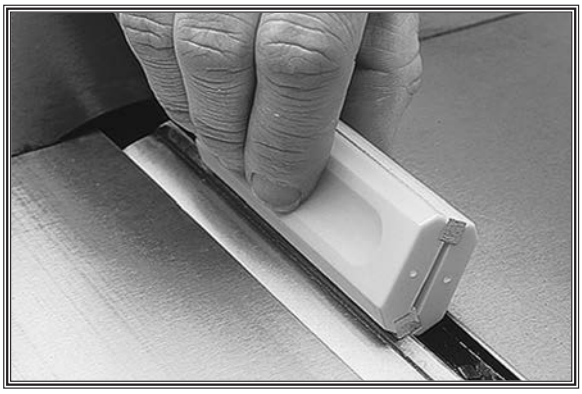

W1041—3" x 2½" Adapters
W1044—4" x 2½" Adapters
These adapters will allow you to connect the 2½" dust chute of the W1829 to an existing dust collection system with standard 3" or 4" fittings.

D2675—Safety Glasses
Exceeding ANSI Z87.1–1989 standards for impact resistance, these Safety Glasses offer outstanding eye protection. Wrap around side shields provide additional protection and a wide field of view.

W1844 Wall-Mount Dust Collector
Nothing beats the convenience of this wall-mounted Dust Collector and the efficiency of the large surface area, pleated filter with internal paddle brushes. Whenever efficiency is being diminished due to dust cake, just a couple of turns of the handle rotates the paddle brushes against the inside of the filter to drop the fine dust cake into the plastic collection bag. It's as easy as that!

OPERATIONS

MAINTENANCE

General

For optimum performance from this machine, this maintenance schedule must be strictly followed.

Ongoing
To minimize your risk of injury and maintain proper machine operation, shut down the machine immediately if you ever observe any of the items below, and fix the problem before continuing operations:

- Loose mounting bolts.
- Damaged blades.
- Worn or damaged wires.
- Dust bag full.
- Any other unsafe condition.

Monthly Check
- V-belt tension, damage, or wear.
- Clean/vacuum dust buildup from underneath body and off of motor.

WARNING

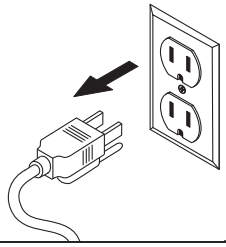

MAKE SURE that your machine is unplugged during all maintenance procedures! If this warning is ignored, serious personal injury may occur.

Cleaning & Protecting

Cleaning the Model W1829 is relatively easy. Vacuum excess wood chips and sawdust, and wipe off the remaining dust with a dry cloth. If any resin has built up, use a resin dissolving cleaner to remove it.

Protect the unpainted cast iron table by wiping it clean after every use—this ensures moisture from wood dust does not remain on bare metal surfaces. Keep your table rust-free with regular applications of quality lubricants.

Lubrication

Since all bearings are sealed and permanently lubricated, simply leave them alone until they need to be replaced. Do not lubricate them.

SERVICE

General

This section covers the most common service adjustments or procedures that may need to be made during the life of your machine. If you require additional machine service not included in this section, please contact Woodstock International Technical Support at (360) 734-3482 or send e-mail to: **techsupport@woodstockint.com**.

Troubleshooting

The following troubleshooting tables cover common problems that may occur with this machine. If you need replacement parts or additional troubleshooting help, contact our Technical Support.

Note: *Before contacting Tech Support, find the machine serial number and manufacture date, and if available, your original purchase receipt. This information is required to properly assist you.*

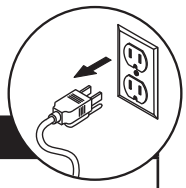

Motor & Electrical

PROBLEM	POSSIBLE CAUSE	CORRECTIVE ACTION
Machine does not start or a breaker trips.	1. Safety key removed from ON/OFF switch. 2. Plug/receptacle is at fault or wired incorrectly. 3. Power supply is at fault/switched ***OFF***. 4. Lockout key is malfunctioning. 5. Motor brushes are at fault. 6. Motor ON/OFF switch is at fault. 7. Wiring is open/has high resistance. 8. Motor is at fault.	1. Replace safety key. 2. Test for good contacts; correct the wiring. 3. Ensure hot lines have correct voltage on all legs and main power supply is switched ***ON***. 4. Replace lockout key; replace switch. 5. Remove/replace brushes. 6. Replace faulty ON/OFF switch. 7. Check for broken wires or disconnected/corroded connections, and repair/replace as necessary. 8. Test/repair/replace.
Machine stalls, is underpowered, or is overloaded.	1. Wrong workpiece material (wood). 2. Cutterhead belt slipping. 3. Plug/receptacle is at fault. 4. Motor brushes are at fault. 5. Motor bearings are at fault. 6. Knives dull, feed rate is too fast depth of cut too great. 7. Motor has overheated. 8. Motor is at fault.	1. Use wood with correct moisture content, without glues, and little pitch/resins. 2. Replace cutterhead belt and re-tension. 3. Test for good contacts; correct the wiring. 4. Remove/replace brushes. 5. Test by rotating shaft; rotational grinding/loose shaft requires bearing replacement. 6. Use sharp knives; reduce feed rate/depth of cut. 7. Clean off motor, let cool, and reduce workload. 8. Test/repair/replace.

Motor & Electrical (Cont.)

PROBLEM	POSSIBLE CAUSE	CORRECTIVE ACTION
Machine has vibration or noisy operation.	1. Motor or component is loose. 2. Knife blades, clamp or jack screws are at fault. 3. Belts worn or loose. 4. Motor fan is rubbing on fan cover. 5. Loose mounting bolts. 6. Blade is at fault.	1. Inspect/replace stripped or damaged bolts/nuts, and re-tighten with thread locking fluid. 2. Resharpen/replace knives as required; set knife alignment correctly. 3. Inspect/replace belts with a new ones. 4. Replace dented fan cover; replace loose/damaged fan. 5. Replace/tighten as required. 6. Replace warped, bent, or twisted blade; resharpen dull blade.

Operation

PROBLEM	POSSIBLE CAUSE	CORRECTIVE ACTION
Excessive snipe (gouge in the end of the board that is uneven with the rest of the cut).	1. Knives set too high. 2. Operator pushing down on trailing end of the workpiece.	1. Set the knives just even with the outfeed table when they're at top dead center (**Page 32**). 2. Reduce/eliminate downward pressure on that end of workpiece.
Workpiece stops in the middle of the cut.	1. Knives set too low.	1. Set the knives just even with the outfeed table when they're at top dead center (**Page 32**).
Chipping.	1. Knots or conflicting grain direction in wood. 2. Nicked or chipped blades. 3. Feeding workpiece too fast. 4. Taking too deep of a cut.	1. Inspect workpiece for knots and grain (**Page 22**); only use clean stock. 2. Adjust one of the nicked knives sideways; replace knives (**Page 32**). 3. Slow down the feed rate. 4. Take a smaller depth of cut. (Always reduce cutting depth when surface planing or working with hard woods.)
Fuzzy Grain.	1. Wood may have high moisture content or surface wetness. 2. Dull knives.	1. Check moisture content and allow to dry if moisture is over 15%. 2. Replace knives (**Page 32**).
Long lines or ridges that run along the length of the board.	1. Nicked or chipped knives.	1. Sharpen or replace knives (**Page 32**).
Uneven cutter marks, wavy surface, or chatter marks across the face of the board.	1. Feeding workpiece too fast. 2. Knives not adjusted at even heights in the cutterhead.	1. Slow down the feed rate. 2. Adjust the knives so they are set up evenly in the cutterhead (**Page 32**).
Board edge is concave or convex after jointing.	1. Board not held with even pressure on infeed and outfeed table during cut. 2. Board started too uneven. 3. Board has excessive bow or twist along its length. 4. Insufficient number of passes.	1. Hold board with even pressure as it moves over the cutterhead. 2. Take partial cuts to remove the extreme high spots before doing a full pass. 3. Surface plane one face so there is a good surface to position against the fence. 4. It may take 3 to 5 passes to achieve a perfect edge, depending on the starting condition of the board and the depth of cut.

Checking/Adjusting Knife Height

The knives MUST be level with the outfeed table when they are at top dead center (their highest point during rotation) or the workpiece cannot be safely fed across the jointer.

Tools Needed	Qty
Hex Wrench 4mm	1
T-Handle Torx Driver T-30	1

Checking Knife Height

1. DISCONNECT JOINTER FROM POWER SOURCE!

2. Place a straightedge on the outfeed table so it extends over the cutterhead. For best results, use a straightedge that will stand on edge without having to be held in place, as illustrated in **Figure 34**.

3. Rotate the cutterhead under the straightedge.

   — If the knives are parallel to the straightedge, rotating the cutterhead will move the straightedge slightly (1/8") forward; no adjustments are necessary.

   — If the knives fall below the straightedge, or if the knives lift the straightedge and move it more than 1/8" when you rotate the cutterhead, the knives must be adjusted.

Adjusting Knife height

1. DISCONNECT JOINTER FROM POWER SOURCE!

2. Block the cutterhead guard back so the cutterhead is fully exposed.

3. Locate the knife clamp screws and knife adjustment jack screws (see **Figures 35-36**).

   Note: *You will perform the procedure in **Steps 4-8** for each of the two knives.*

4. Use a 4mm hex wrench to loosen the four knife clamp screws.

5. Adjust the two jack screws until both ends are sightly below the straightedge.

⚠WARNING

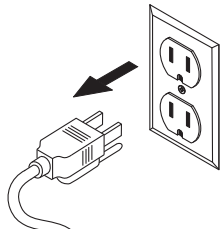

MAKE SURE that your machine is unplugged during all service procedures! If this warning is ignored, serious personal injury may occur.

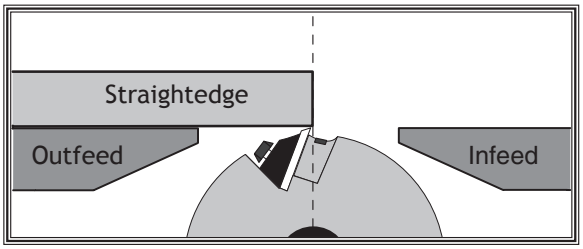

Figure 34. Illustration of a typical cutterhead alignment setup.

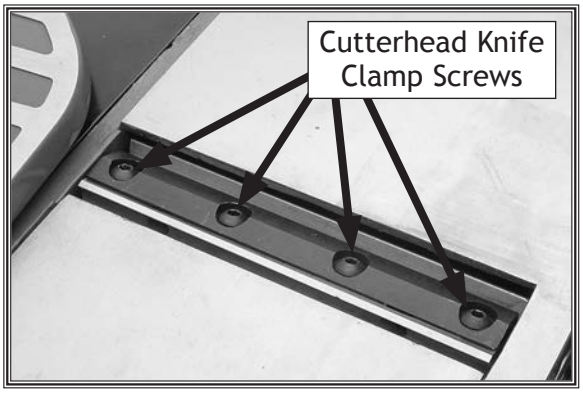

Figure 35. Cutterhead knife clamp screws.

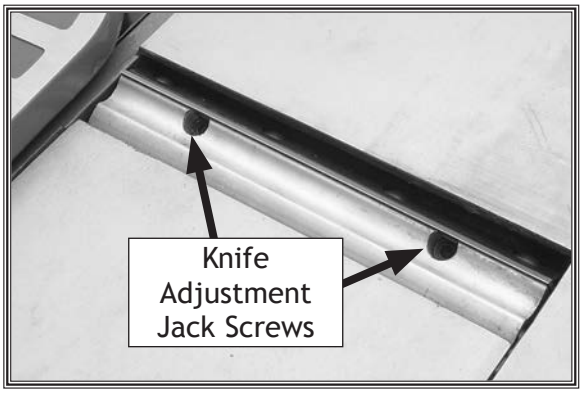

Figure 36. Knife adjustment jack screws.

6. Move the straightedge to position **A**, as shown in **Figure 37**. Turn the jack screw nearest the fence counterclockwise until the end of the knife touches the straightedge.

7. Move the straightedge to position **B**, as shown in **Figure 39**. Turn the jack screw nearest the guard counterclockwise until the end of the knife touches the straightedge.

8. Slightly tighten the clamp screws, according to the proper tightening sequence, as shown in **Figure 38**. Repeat **Steps 6–7** for the other cutterhead knife.

   Note: *Slightly tightening the clamp screws maintains the knife position while performing the same step on the other knife. They will be final tightened in a later step.*

9. Without disturbing the knife clamp, rotate the cutterhead slightly to check the knife height.

   — If the knife moves the straightedge slightly (1/8") forward and back on the table, the knife height is set correctly.

   — If the knife does not move the straightedge slightly (1/8") forward and back on the table, continue to make fine adjustments with the jack screws until the knife is set correctly.

10. When the knife heights are set correctly, final tighten each of the knives' clamp screws according to the proper tightening sequence (see **Figure 38**).

11. Return the cutterhead guard to the operating position and ensure it is working properly.

12. Re-align the fence and tables as needed.

13. Perform a test cut on suitable piece of scrap material.

⚠ CAUTION

Cutterhead knives are sharp and laceration injuries may occur. Use caution when handling the cutterhead knives.

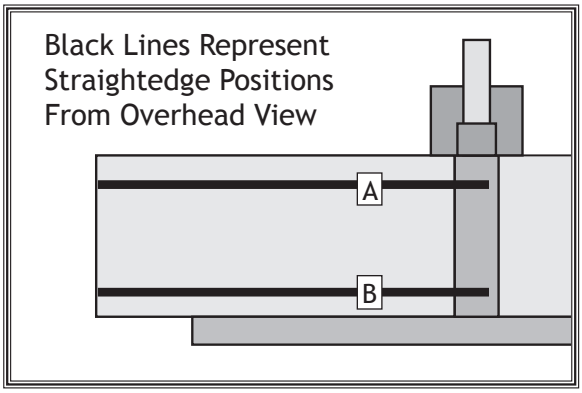

Figure 37. Straightedge positions A and B.

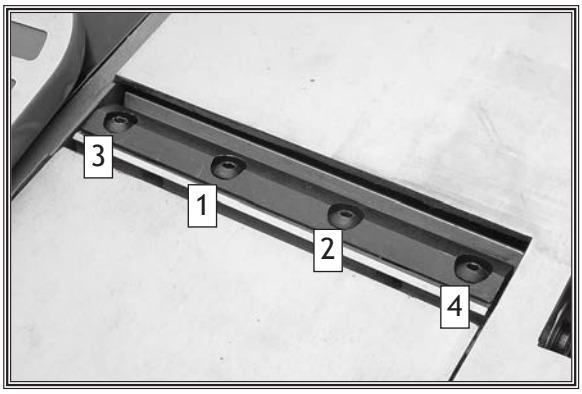

Figure 38. Knife clamp screw tightening sequence.

SERVICE

Replacing Knives

Sharp cutterhead knives provide the best cutting results. Under normal operation these knives will become dull and need to be sharpened or replaced. Refer to **Troubleshooting** (see **Page 30)** to determine if the knives may be dull.

Tools Needed	**Qty**
Hex Wrench 4mm	1
Hex Wrench 5mm	1

To replace the cutterhead knives, do these steps:

1. DISCONNECT JOINTER FROM POWER.

2. Carefully rotate the cutterhead until the clamp screws are accessible.

3. Remove the cutterhead clamp screws fastening the knife to the cutterhead (see **Figure 39**). Carefully remove the knife and clamp from the cutterhead.

4. Repeat **Steps 2-3** for the second cutterhead knife.

5. Clean the cutterhead thoroughly before installing new knives or re-installing sharpened knives.

6. Install one knife, clamp it in the cutterhead, and slightly tighten each of the clamp screws in sequence, as shown in **Figure 40**.

   Note: *By tightening the clamp screws out of sequence, jointing results may be hampered. Following the tightening sequence reduces that possibility.*

7. Repeat **Step 6** for the second cutterhead knife.

8. Check the alignment of the knives to the outfeed table. They should be parallel to the outfeed table.

   — If the knife is not parallel to the outfeed table, adjust the jack screws to fine tune the knife height. Refer to **Checking/Adjusting Knife Height** on **Page 32**.

9. Follow the tightening sequence and final tighten each of the clamp screws for both knives, as shown in **Figure 40**.

10. Ensure cutterhead guard is working properly. Align the fence as needed. Perform a test cut on a suitable piece of scrap material.

WARNING

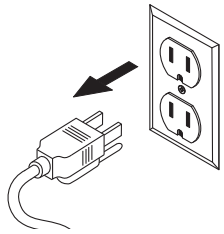

MAKE SURE that your machine is unplugged during all service procedures! If this warning is ignored, serious personal injury may occur.

CAUTION

Cutterhead knives are sharp and laceration injuries may occur. Use caution when handling the cutterhead knives.

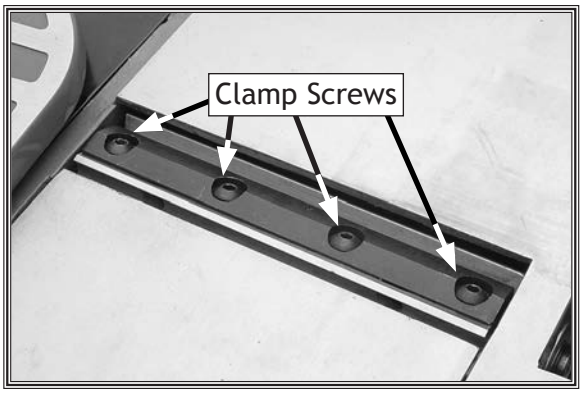

Figure 39. Cutterhead clamp screw location.

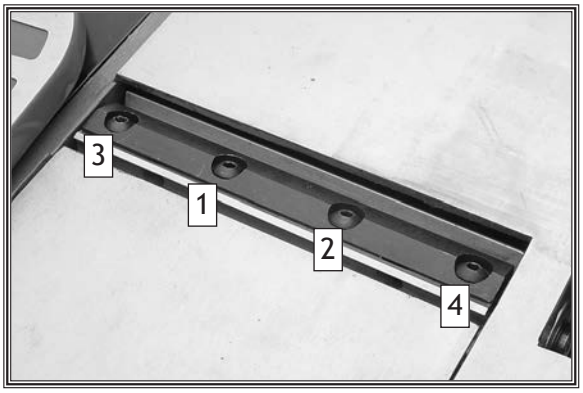

Figure 40. Knife clamp screw tightening sequence.

SERVICE

Setting Fence Angle Stops

This section provides instructions for setting the fence angle stops precisely at 90°, 45° inward, or 45° outward.

Note: *To ensure accurate results when edge jointing, check the accuracy of these settings frequently (monthly at a minimum) and re-adjust them if necessary.*

Tools Needed	Qty
Flathead Screwdriver	1
Wrench 8mm	1
Wrench 10mm	1

Setting 90° Fence Angle Stop

1. DISCONNECT THE JOINTER FROM POWER!

2. Position the fence over the bed and tighten the sliding handle, loosen the fence tilting handle.

3. Press the forward tab of the limit plate (see **Figure 41**) into the rear slot of the limit block.

4. Tilt the fence as far as it will go towards 90° (perpendicular to the table) until it hits the limit block shaft. Tighten the fence tilting handle.

5. Use a square to check the angle of the fence, as shown in **Figure 42**.

   — If the fence is perpendicular to the table, the 90° stop is set correctly; no additional steps are necessary. Proceed to set the 45° inward and 45° outward stops (see **Page 36**).

   — If the fence is not perpendicular to the table, adjust the 90° stop by doing **Steps 6-9**.

6. Loosen the fence tilting handle, bring the fence to 90° with the square set against the fence, then tighten the handle.

   Note: *Keep the limit plate tab in the rear slot of the limit block.*

7. Loosen the jam nut (located at the rear of the limit block shaft).

8. Using a flathead screwdriver, turn the limit block shaft until it hits the fence.

9. Tighten the jam nut. The 90° stop is now set.

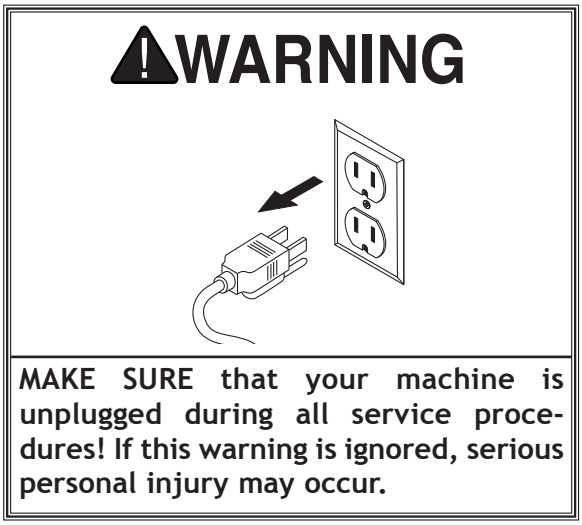

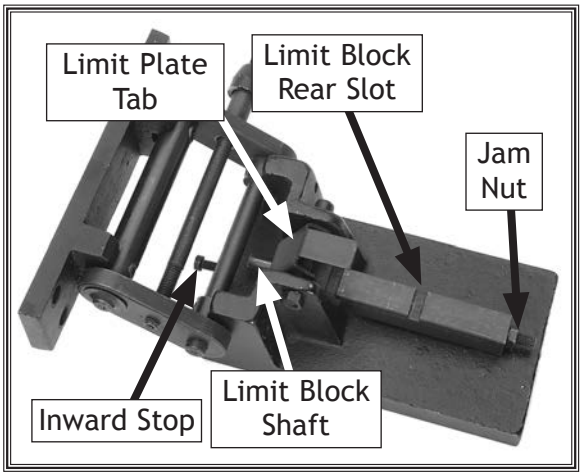

Figure 41. Fence stop parts identification.

Figure 42. Checking the 90° stop.

SERVICE

Setting 45° Inward Stop

1. DISCONNECT JOINTER FROM POWER!

2. With the fence positioned over the bed and the sliding handle locked, loosen the fence tilting handle and release the limit tab.

3. Tilt the fence towards the table as far as it will go, then tighten the fence tilting handle.

   Note: *When you tilt the fence towards the table, it will stop when it hits the inward stop bolt.*

4. Use a combination square to check the angle of the fence, as shown in **Figure 43**.

   — If the fence leans 45° towards the table, the inward 45° stop is set correctly; proceed to set the outward 45° stop (see **Page 35**).

   — If the fence does not lean 45° towards the table, adjust the inward 45° stop by performing **Steps 5-9**.

5. Loosen the fence tilting handle, bring the fence to 45°, then tighten the handle just enough to keep the fence in position.

6. Remove the limit block from the fence bracket assembly and set it aside.

7. Using two 8mm wrenches, adjust the inward stop bolt (see **Figure 44**) until it contacts the fence at precisely 45° inward, then tighten the jam nut (where the bolt meets the bracket assembly) while holding the stop bolt in place. Some trial-and-error will be required to set this stop correctly.

8. Use two 8mm wrenches to tighten the hex nut on the inward stop as you hold the stop in place.

9. Put the limit block back, bring the fence back to 90° and tighten the tilting handle.

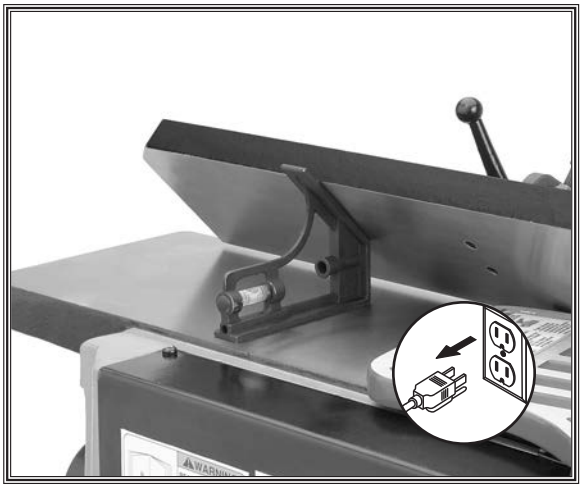

Figure 43. Checking the inward 45° stop.

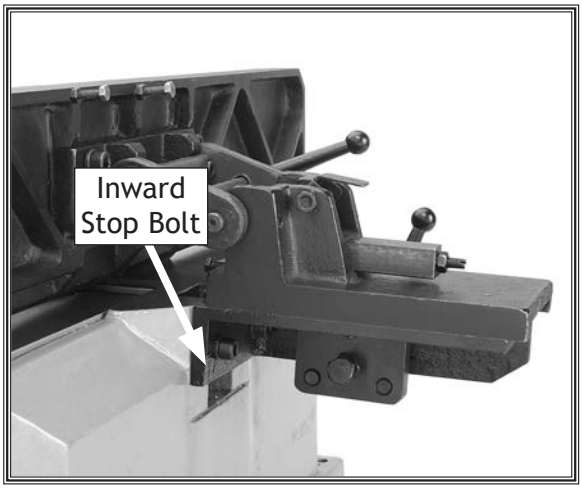

Figure 44. Adjusting the inward stop bolt.

Setting 45° Outward Stop

1. DISCONNECT JOINTER FROM POWER!

2. Loosen the fence tilting handle, remove the limit block and set it aside.

3. Tilt the fence backward (away from the table) until it stops.

   Note: *The fence will stop when the outward stop bolts hit the fence bracket.*

4. Use a square to check the angle of the fence, as shown in **Figure 45.**

   — If the fence is tilting away from the table at 45°, the outward stops are set correctly. Put the limit block back, bring the fence to 90°, and tighten the tilting handle.

   — If the fence is not tilting away from the table at 45°, perform **Steps 5-6** to set the outward stops correctly.

5. With the outward stop bolts resting against the fence bracket, use an 8mm wrench to adjust the length of the stops until the fence is at 45°, then tighten the jam nuts (see **Figure 46**).

6. Put the limit block back, bring the fence to 90°, and tighten the fence tilting handle.

Figure 45. Checking the outward 45° stop.

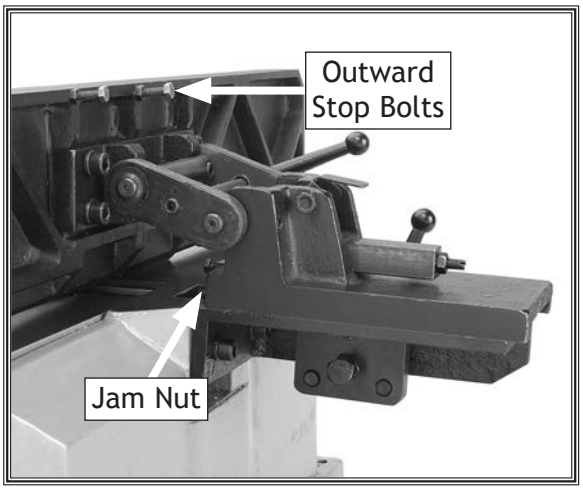

Figure 46. Outward stop bolt detail.

SERVICE

V-Belt Replacement

The Model W1829 uses two belts to drive the cutterhead and the dust collection impeller. When these belts are not tensioned correctly, misaligned, or damaged, your jointer will not function properly.

The part number for the replacement drive belt is X1829070; the part number for the replacement fan belt is X1829092.

Refer to the parts diagram in this manual when fixing belt problems. If you need further assistance, call our Tech Support at (360) 734-3482 or send e-mail to: **techsupport@woodstockint.com**.

To re-align or replace the cutterhead belt, do these steps:

1. DISCONNECT JOINTER FROM POWER!

2. While facing the rear of the jointer, tip it away from you until it rests on the fence assembly.

3. Remove the screws that hold the motor cover to the jointer base. Lift the cover off and set it aside.

4. Inspect the cutterhead belt for proper tension, straight alignment, and possible damage or wear.

   Note: *The belt is properly tensioned if it deflects about 3/8" when you press down on middle of the belt with moderate pressure from your thumb or forefinger. The belt is properly aligned if it lies flat and straight on the motor shaft and drive pulley. Belt damage will be evident upon inspection.*

5. Loosen the four motor mounting cap screws (see **Figure 47**), but do not remove them.

6. Replace a damaged belt with a new one. Re-align and re-tension the belt.

7. Tighten the motor mounting screws and replace the motor cover.

8. Test run the jointer, as described on **Page 20**. If this procedure does not solve the problem, call Tech Support.

   Note: *The fan belt is installed without releasing motor tension. Simply slide the old belt off. Slide the new belt on and replace the motor cover.*

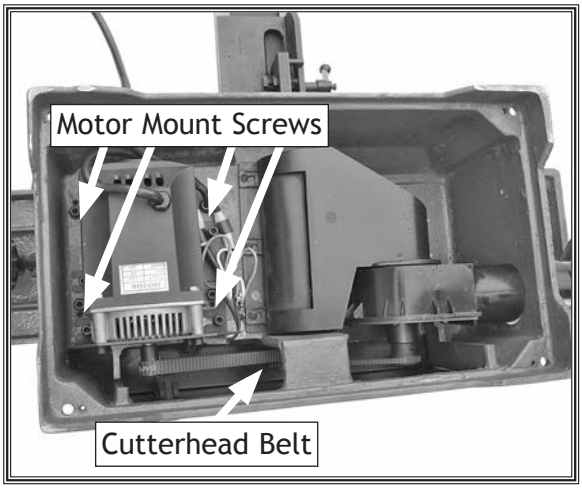

Figure 47. Motor mounting screws and belt locations.

SERVICE

Motor Brush Replacement

This jointer has a universal motor that uses carbon brushes, which are considered wear-items. Refer to the troubleshooting guide to determine if the motor brushes must be replaced.

You can order a new brush kit (two brush assemblies) by calling customer service and ordering part X1829024-1.

To replace motor brushes, do these steps:

1. DISCONNECT JOINTER FROM POWER!

2. While facing the rear of the jointer, tip it away from you until it rests on the fence assembly.

3. Remove the screws that hold the motor cover to the jointer base. Lift the cover off and set it aside.

4. Vacuum all dust and debris from the motor and belt areas.

5. Use a dime to unscrew the brush caps (see **Figure 48**).

   Note: *When you remove the brush caps, a spring will pop out of the socket; the carbon brush is firmly attached to this spring. When you buy a new brush kit, you will get a pair of brush/spring assemblies.*

6. Check the brushes for wear. If a brush is worn to less than 3/32" in length, replace both brushes.

7. Insert the brush assemblies, positioning them so they slide into the slots built into the sockets, then press the brush cap against the spring, push it into the socket, and turn it to lock it in the motor housing.

8. Replace the motor cover.

9. Test run the jointer, as described on **Page 20**.

   — If the jointer runs properly, you are done.

   — If the motor does not start, either the brushes are not correctly aligned in the sockets or there is another problem with the motor or wiring. Refer to the **Troubleshooting** section for assistance.

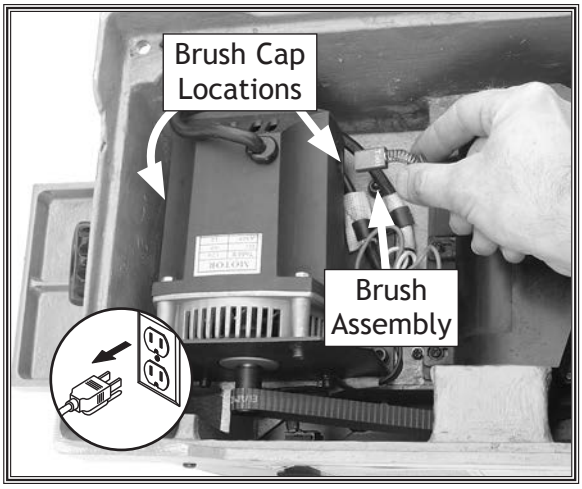

Figure 48. Removing a motor brush.

SERVICE

Electrical Safety Instructions

These pages are current at the time of printing. However, in the spirit of improvement, we may make changes to the electrical systems of future machines. Compare the manufacture date of your machine to the one stated in this manual, and study this section carefully.

If there are differences between your machine and what is shown in this section, call Technical Support at (360) 734-3482 for assistance BEFORE making any changes to the wiring on your machine. An updated wiring diagram may be available. **Note:** *Please gather the serial number and manufacture date of your machine before calling. This information can be found on the main machine label.*

⚠WARNING

SHOCK HAZARD. Working on wiring that is connected to a power source is extremely dangerous. Touching electrified parts will result in personal injury including but not limited to severe burns, electrocution, or death. Disconnect the power from the machine before servicing electrical components!

QUALIFIED ELECTRICIAN. Due to the inherent hazards of electricity, only a qualified electrician should perform wiring tasks on this machine. If you are not a qualified electrician, get help from one before attempting any kind of wiring job.

WIRE CONNECTIONS. All connections must be tight to prevent wires from loosening during machine operation. Double-check all wires disconnected or connected during any wiring task to ensure tight connections.

WIRE/COMPONENT DAMAGE. Damaged wires or components increase the risk of serious personal injury, fire, or machine damage. If you notice that any wires or components are damaged while performing a wiring task, replace those wires or components before completing the task.

MODIFICATIONS. Using aftermarket parts or modifying the wiring beyond what is shown in the diagram may lead to unpredictable results, including serious injury or fire.

MOTOR WIRING. The motor wiring shown in these diagrams is current at the time of printing, but it may not match your machine. Always use the wiring diagram inside the motor junction box.

CAPACITORS/INVERTERS. Some capacitors and power inverters store an electrical charge for up to 10 minutes after being disconnected from the power source. To reduce the risk of being shocked, wait at least this long before working on capacitors.

CIRCUIT REQUIREMENTS. You MUST follow the requirements at the beginning of this manual when connecting your machine to a power source.

EXPERIENCING DIFFICULTIES. If you are experiencing difficulties understanding the information included in this section, contact our Technical Support at (360) 734-3482.

NOTICE

The photos and diagrams included in this section are best viewed in color. You can view these pages in color at www.shopfox.biz.

WIRING DIAGRAM COLOR KEY

BLACK	Bk	BLUE	Bl	YELLOW	Yl	LIGHT BLUE	Lb
WHITE	Wt	BROWN	Br	YELLOW GREEN	Yg	BLUE WHITE	Bw
GREEN	Gn	GRAY	Gy	PURPLE	Pu	TUR-QUOISE	Tu
RED	Rd	ORANGE	Or	PINK	Pk		

Wiring Diagram

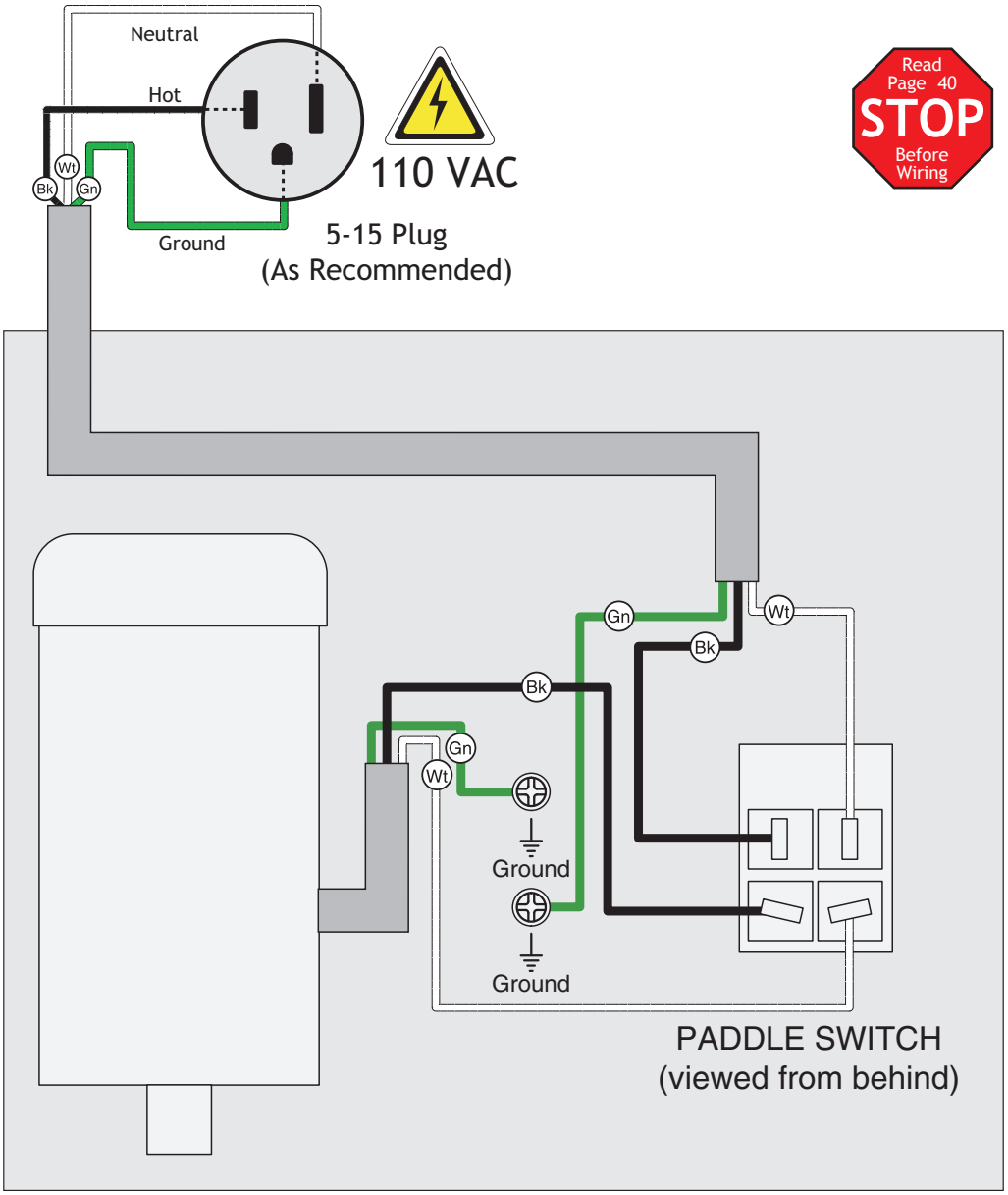

NOTICE

This motor wiring diagram is current at the time of printing; however, always use the diagram on the inside of the junction box cover when rewiring your motor!

PARTS

Main

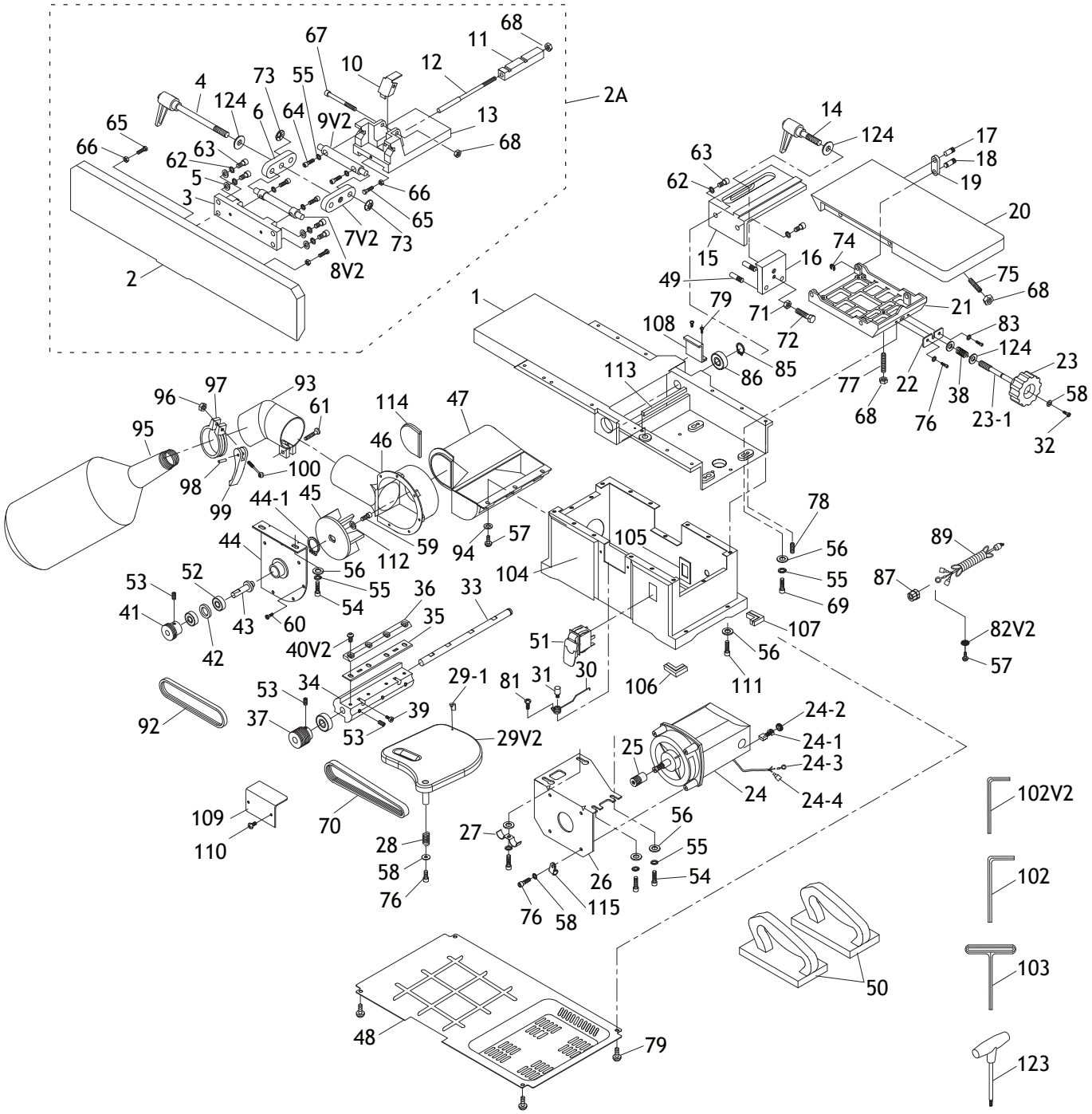
2A
67
68
11
10
12
4
73
55
124
6
64
9V2
13
65
66
62
63
5
3
7V2
8V2
2
1
14
124
17
18
19
20
15
16
74
49
75
68
21
79
71
72
108
83
124
23
113
86
85
77
22
38
58
68
76
23-1
32
96
97
93
61
114
47
95
46
100
98
99
44-1
45
44
59
112
94
57
105
104
78
56
55
69
89
87
82V2
57
53
52
56
55
54
36
33
41
43
60
35
42
40V2
51
30
107
56
111
106
53
34
29-1
81
31
39
37
53
29V2
92
24-2
24-1
24-3
24-4
25
24
102V2
109
110
70
28
58
76
27
56
55
54
26
76
58
115
102
103
50
48
79
123

Main Parts List

REF	PART #	DESCRIPTION
1	X1829001	TABLE
2	X1829002	FENCE, CAST IRON
2A	X1829002A	FENCE ASSEMBLY
3	X1829003	FENCE PLATE
4	X1829004	FENCE TILTING HANDLE
5	X1829005	FLAT WASHER 8MM
6	X1829006	RIGHT LINK
7V2	X1829007V2	LEFT LINK (TAPERED) V2.03.18
8V2	X1829008V2	PLATE SHAFT (TAPERED) V2.03.18
9V2	X1829009V2	BRACKET SHAFT (TAPERED) V2.03.18
10	X1829010	LIMIT PLATE
11	X1829011	BLOCK
12	X1829012	SHAFT
13	X1829013	FENCE BRACKET
14	X1829014	FENCE SLIDING HANDLE
15	X1829015	FENCE SUPPORT
16	X1829016	LOCKING PLATE
17	X1829017	TABLE PIN
18	X1829018	FRAME PIN
19	X1829019	BRACKET
20	X1829020	INFEED TABLE
21	X1829021	TABLE FRAME
22	X1829022	SUPPORT PLATE
23	X1829023	KNOB
23-1	X1829023-1	KNOB BOLT
24	X1829024	MOTOR 1-1/2HP 110V UNIVERSAL
24-1	X1829024-1	CARBON BRUSH SET
24-2	X1829024-2	BRUSH COVER
24-3	X1829024-3	RING TERMINAL
24-4	X1829024-4	SPADE TERMINAL
25	X1829025	MOTOR PULLEY
26	X1829026	MOTOR MOUNTING PLATE
27	X1829027	CORD CLAMP
28	X1829028	COMPRESSION SPRING
29V2	X1829029V2	CUTTERHEAD GUARD V2.08.18
29-1	X1829029-1	RUBBER BUMPER
30	X1829030	TORSION SPRING
31	X1829031	PIN
32	X1829032	PHLP HD SCR M5-.8 X 14
33	X1829033	SHAFT
34	X1829034	CUTTERHEAD
35	X1829035	KNIVES 2-PC SET 6 x 7/8 x 3/32"
36	X1829036	KNIFE CLAMP
37	X1829037	DRIVE PULLEY
38	X1829038	COMPRESSION SPRING
39	X1829039	JACK SCREW M4-.7 X 10
40V2	X1829040V2	BUTTON HD TORX SCR 1/4-20 X 5/8 V2.11.18
41	X1829041	FAN PULLEY
42	X1829042	SPACER
43	X1829043	FAN SHAFT
44	X1829044	CHIP BLOWER MOUNTING PLATE
44-1	X1829044-1	EXT RETAINING RING 26MM

REF	PART #	DESCRIPTION
45	X1829045	IMPELLER
46	X1829046	CHIP EXHAUST
47	X1829047	CHIP COLLECTOR
48	X1829048	BASE BOTTOM
49	X1829049	ALIGNMENT PIN
50	X1829050	PUSH BLOCKS
51	X1829051	PADDLE SWITCH
52	X1829052	BALL BEARING 6000ZZ
53	X1829053	SET SCREW M6-1 X 10
54	X1829054	CAP SCREW M6-1 X 12
55	X1829055	LOCK WASHER 6MM
56	X1829056	FLAT WASHER 6MM
57	X1829057	PHLP HD SCR M5-.8 X 10
58	X1829058	FLAT WASHER 5MM
59	X1829059	CAP SCREW M4-.7 X 10
60	X1829060	TAP SCREW M6 X 12
61	X1829061	PHLP HD SCR M6-1 X 20
62	X1829062	LOCK WASHER 8MM
63	X1829063	CAP SCREW M8-1.25 X 20
64	X1829064	CAP SCREW M6-1 X 20
65	X1829065	HEX BOLT M5-.8 X 25
66	X1829066	HEX NUT M5-.8
67	X1829067	CAP SCREW M6-1 X 55
68	X1829068	HEX NUT M6-1
69	X1829069	CAP SCREW M6-1 X 30
70	X1829070	RIBBED V-BELT 171J5 NK
71	X1829071	HEX NUT M8-1.25
72	X1829072	HEX BOLT M8-1.25 X 35
73	X1829073	SHAFT RETAINER 10MM
74	X1829074	E-CLIP 6MM
75	X1829075	SET SCREW M6-1 X 30
76	X1829076	CAP SCREW M6-1 X 30
77	X1829077	SET SCREW M6-1 X 35
78	X1829078	SET SCREW M6-1 X 16
79	X1829079	PHLP HD SCR M5-.8 X 8
81	X1829081	PHLP HD SCR M4-.7 X 10
82V2	X1829082V2	EXT TOOTH WASHER 5MM V2.11.18
83	X1829083	LOCK WASHER 5MM
85	X1829085	EXT RETAINING RING 12MM
86	X1829086	BALL BEARING 6201ZZ
87	X1829087	STR SNAP-IN STRAIN RELIEF 5/8"
89	X1829089	POWER CORD 16G 3W 5-15 72"
92	X1829092	FAN RIBBED V-BELT V1.25-7A
93	X1829093	DUST CHUTE
94	X1829094	FLAT WASHER 5MM
95	X1829095	DUST COLLECTION BAG
96	X1829096	HEX NUT M6-1
97	X1829097	CLAMP 60MM
98	X1829098	SOLID PIN 4.5 X 20MM
99	X1829099	CLAMP HANDLE
100	X1829100	SWING BOLT M6-1 X 50
102	X1829102	HEX WRENCH 6MM

Main Parts List (Cont.)

REF	PART #	DESCRIPTION
102V2	X1829102V2	HEX WRENCH 5MM V2.08.18
103	X1829103	T-HANDLE HEX WRENCH 4MM
104	X1829104	BASE
105	X1829105	SWITCH MOUNTING PLATE
106	X1829106	RIGHT RUBBER FOOT
107	X1829107	LEFT RUBBER FOOT
108	X1829108	GUARD PLATE
109	X1829109	CUTTERHEAD COVER

REF	PART #	DESCRIPTION
110	X1829110	PHLP HD SCR M5-.8 X 6
111	X1829111	CAP SCREW M6-1 X 8
112	X1829112	FENDER WASHER 5MM
113	X1829113	INFEED TABLE SUPPORT ARM
114	X1829114	CHIP COLLECTOR COVER PLATE
115	X1829115	WIRE RESTRAINT
123	X1829123	T-HANDLE TORX DRIVER T-30
124	X1829124	FLAT WASHER 10MM

Labels & Cosmetics

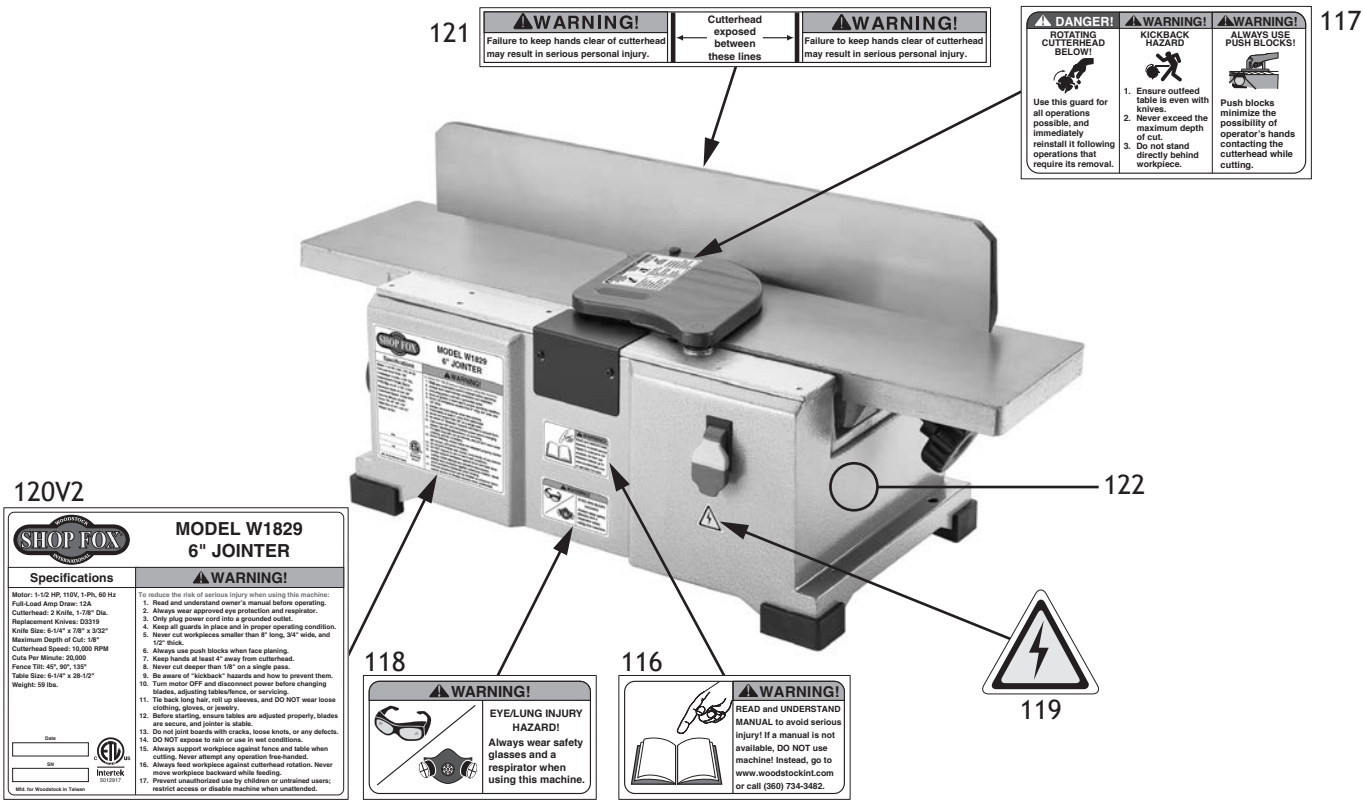

REF	PART #	DESCRIPTION
116	X1829116	READ MANUAL LABEL
117	X1829117	CUTTERHEAD GUARD LABEL
118	X1829118	EYE/LUNG HAZARD LABEL
119	X1829119	ELECTRICITY LABEL

REF	PART #	DESCRIPTION
120V2	X1829120V2	MACHINE ID LABEL V2.02.20
121	X1829121	CUTTERHEAD EXPOSURE LABEL
122	X1829122	SHOP FOX WHITE (M1006)

⚠WARNING

Safety labels warn about machine hazards and how to prevent serious personal injury. The owner of this machine MUST maintain the original location and readability of all labels on this machine. If any label is removed or becomes unreadable, REPLACE that label before allowing machine to be operated again. Contact us at (360) 734-3482 or www.woodstockint.com to order new labels.

WARRANTY

Woodstock International, Inc. warrants all Shop Fox machinery to be free of defects from workmanship and materials for a period of two years from the date of original purchase by the original owner. This warranty does not apply to defects due directly or indirectly to misuse, abuse, negligence or accidents, lack of maintenance, or reimbursement of third party expenses incurred.

Woodstock International, Inc. will repair, replace, or arrange for a dealer refund, at its expense and option, the Shop Fox machine or machine part proven to be defective for its designed and intended use, provided that the original owner returns the product prepaid to an authorized warranty or repair facility as designated by our Bellingham, Washington office with proof of their purchase of the product within two years, and provides Woodstock International, Inc. reasonable opportunity to verify the alleged defect through inspection. If it is determined there is no defect, or that the defect resulted from causes not within the scope of Woodstock International Inc.'s warranty, then the original owner must bear the cost of storing and returning the product.

This is Woodstock International, Inc.'s sole written warranty and any and all warranties that may be implied by law, including any merchantability or fitness, for any particular purpose, are hereby limited to the duration of this written warranty. We do not warrant that Shop Fox machinery complies with the provisions of any law, acts or electrical codes. We do not reimburse for third party repairs. In no event shall Woodstock International, Inc.'s liability under this limited warranty exceed the purchase price paid for the product, and any legal actions brought against Woodstock International, Inc. shall be tried in the State of Washington, County of Whatcom. We shall in no event be liable for death, injuries to persons or property or for incidental, contingent, special or consequential damages arising from the use of our products.

Every effort has been made to ensure that all Shop Fox machinery meets high quality and durability standards. We are commited to continuously improving the quality of our products, and reserve the right to change specifications at any time.

To register the warranty, go to **https://www.woodstockint.com/warranty**, or scan the QR code below. You will be directed to the Warranty Registration page on www.woodstockint.com. Enter all applicable production information.

WARRANTY

WOODSTOCKINT.COM

High Quality Machines and Tools

Woodstock International, Inc. carries thousands of products designed to meet the needs of today's woodworkers and metalworkers. Ask your dealer about these fine products:

BROSEM® PRECISION STOP BLOCK

THE REBEL®

BOARD BUDDIES®

SLICKPLANE®

ACCU-SHARP®

JOINTER PAL®

STEELEX® FINE TOOLS

WOODSTOCK SHOP FOX® INTERNATIONAL

ROMAN CARBIDE®

Rotacator®

PLANER PAL®

PRO-STIK® ABRASIVE BELT & DISC CLEANER

STEELEX® PLUS

Aluma-Classic®

PARROT VISE®

WHOLESALE ONLY

WOODSTOCK INTERNATIONAL, INC.

Phone: (360) 734-3482 · Fax: (360) 671-3053 · Toll Free Fax: (800) 647-8801

P.O.Box 2309 · Bellingham, WA 98227

SHOPFOX.BIZ