SECTION 9: PARTS

Body

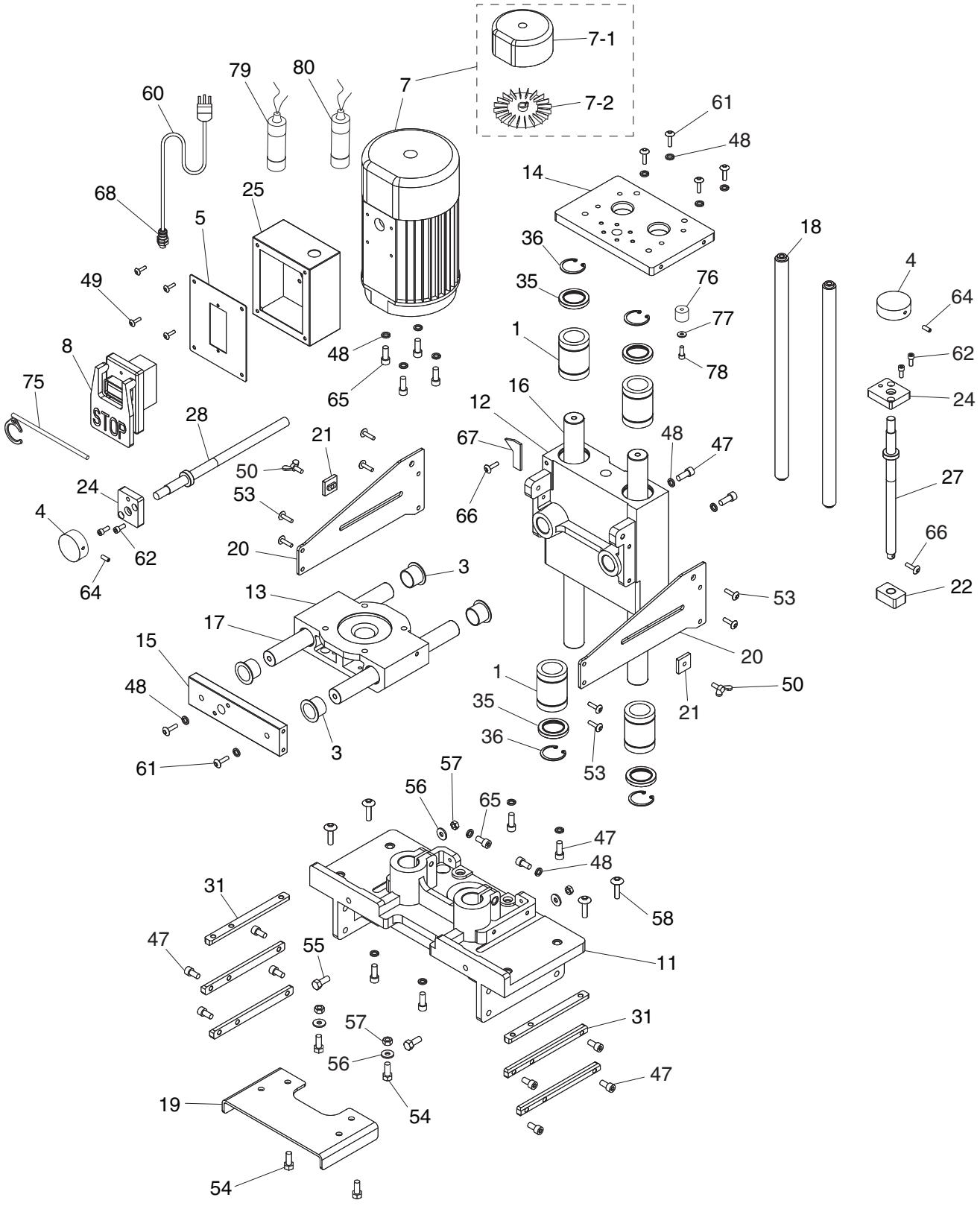

BUY PARTS ONLINE AT GRIZZLY.COM!
Scan QR code to visit our Parts Store.

Body Parts List

REF	PART #	DESCRIPTION
1	P0718001	VERTICAL ROUND ROD BUSHING
3	P0718003	ROUND ROD DRYMET BEARING
4	P0718004	KNURLED KNOB
5	P0718005	SWITCH BOX COVER
7	P0718007	MOTOR 1HP 110/220V 1PH
7-1	P0718007-1	MOTOR FAN COVER
7-2	P0718007-2	MOTOR FAN
8	P0718008	ON/OFF PADDLE SWITCH ASSEMBLY
11	P0718011	COLUMN BASE
12	P0718012	COLUMN
13	P0718013	MOTOR MOUNT
14	P0718014	UPPER COLUMN COVER
15	P0718015	ROD CONNECTION BAR
16	P0718016	VERTICAL ROUND ROD
17	P0718017	HORIZONTAL ROUND ROD
18	P0718018	COLUMN ROD
19	P0718019	TABLE BASE
20	P0718020	MOTOR MOUNT SIDE BRACKET
21	P0718021	THREADED PLATE
22	P0718022	THREADED BLOCK
24	P0718024	DEPTH CONTROL GAUGE MOUNT
25	P0718025	SWITCH BOX
27	P0718027	VERTICAL CONTROL ROD
28	P0718028	HORIZONTAL CONTROL ROD
31	P0718031	BASE CONNECTION BAR
35	P0718035	BUSHING SEAL

REF	PART #	DESCRIPTION
36	P0718036	INT RETAINING RING 45MM
47	P0718047	CAP SCREW M8-1.25 X 20
48	P0718048	LOCK WASHER 8MM
49	P0718049	FLANGE BOLT M5-.8 X 12
50	P0718050	WING SCREW M6-1 X 16
53	P0718053	BUTTON HD CAP SCR M6-1 X 20
54	P0718054	HEX BOLT M8-1.25 X 16
55	P0718055	HEX BOLT M8-1.25 X 25
56	P0718056	FLAT WASHER 8MM
57	P0718057	HEX NUT M8-1.25
58	P0718058	BUTTON HD CAP SCR M8-1.25 X 30
60	P0718060	POWER CORD 14G 3C 5FT 5-15 PLUG
61	P0718061	BUTTON HD CAP SCR M8-1.25 X 20
62	P0718062	CAP SCREW M6-1 X 12
64	P0718064	SET SCREW M6-1 X 10
65	P0718065	CAP SCREW M8-1.25 X 30
66	P0718066	BUTTON HD CAP SCR M5-.8 X 12
67	P0718067	POINTER
68	P0718068	STRAIN RELIEF
75	P0718075	SWITCH DISABLING PIN
76	P0718076	BUFFER PAD
77	P0718077	FLAT WASHER 6MM
78	P0718078	CAP SCREW M6-1 X 20
79	P0718079	S CAPACITOR 300M 125V 1-3/8 X 2-5/8
80	P0718080	R CAPACITOR 50M 250V 1-5/8 X 2-3/8

Please Note: *We do our best to stock replacement parts whenever possible, but we cannot guarantee that all parts shown here are available for purchase. Call* ***(800) 523-4777*** *or visit our online parts store at* ***www.grizzly.com*** *to check for availability.*

BUY PARTS ONLINE AT GRIZZLY.COM!
Scan QR code to visit our Parts Store.

Table

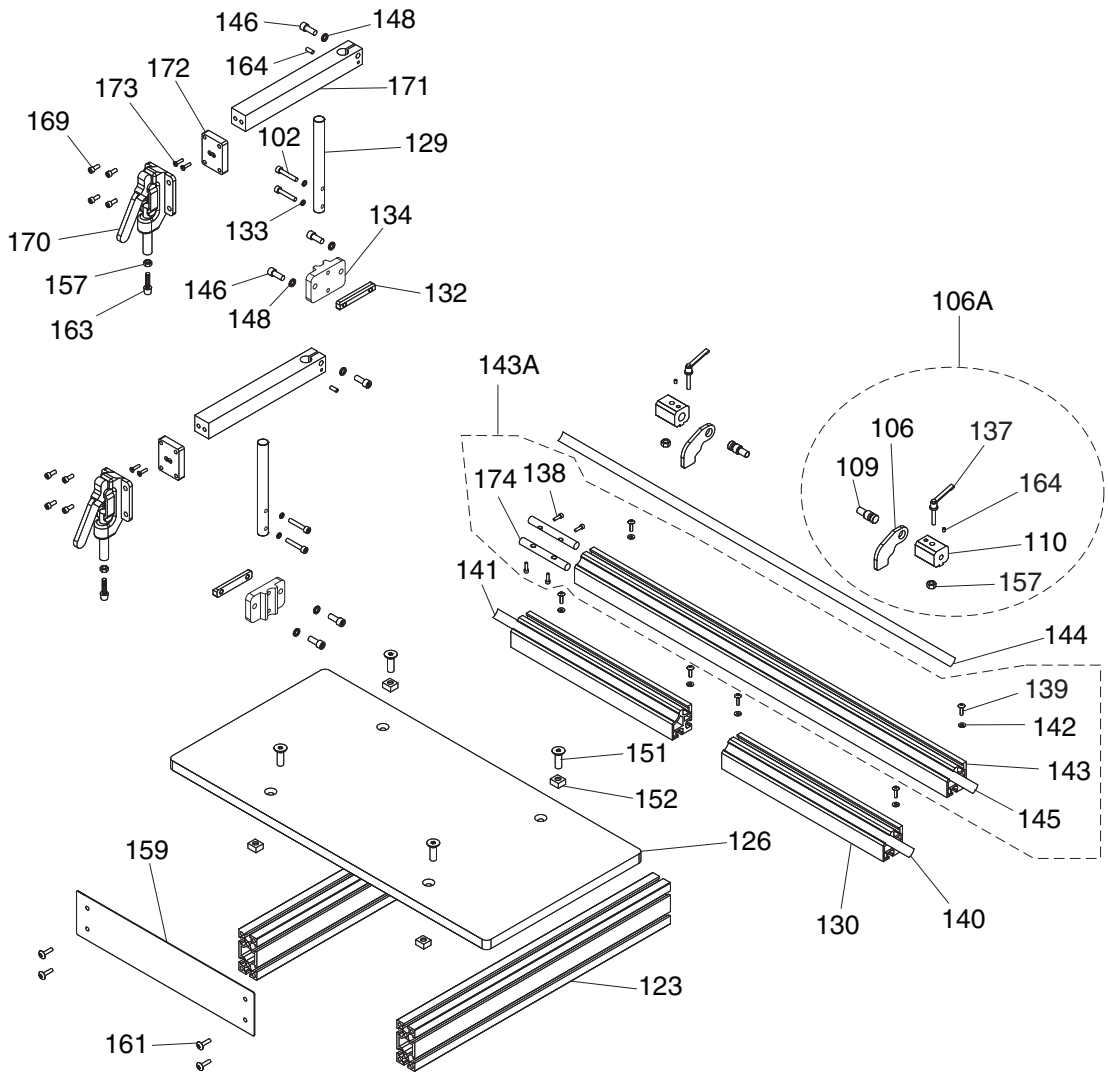

REF	PART #	DESCRIPTION
102	P0718102	CAP SCREW M6-1 X 30
106	P0718106	LONGITUDINAL STOP PLATE
106A	P0718106A	LONGITUDINAL STOP ASSEMBLY
109	P0718109	STOP PIN
110	P0718110	STOP PLATE BASE
123	P0718123	BASE RAILS
126	P0718126	TABLE
129	P0718129	CLAMP ROD
130	P0718130	FRONT LONGITUDINAL FENCE
132	P0718132	CLAMP CONNECTION BAR
133	P0718133	LOCK WASHER 6MM
134	P0718134	CLAMP BASE
137	P0718137	LOCK LEVER
138	P0718138	CAP SCREW M5-.8 X 16
139	P0718139	PHLP HD SCR M5-.8 X 12
140	P0718140	RIGHT FRONT LONGITUDINAL SCALE
141	P0718141	LEFT FRONT LONGITUDINAL SCALE
142	P0718142	FLAT WASHER 5MM
143	P0718143	REAR LONGITUDINAL FENCE

REF	PART #	DESCRIPTION
143A	P0718143A	REAR LONGITUDINAL FENCE ASSY
144	P0718144	LEFT REAR LONGITUDINAL SCALE
145	P0718145	RIGHT REAR LONGITUDINAL SCALE
146	P0718146	CAP SCREW M8-1.25 X 25
148	P0718148	LOCK WASHER 8MM
151	P0718151	FLAT HD SCR M8-1.25 X 30
152	P0718152	T-NUT M8-1.25
157	P0718157	HEX NUT M8-1.25
159	P0718159	BASE FRONT COVER
161	P0718161	BUTTON HD CAP SCR M8-1.25 X 20
163	P0718163	HOLD-DOWN BOLT NEOPRENE TIP
164	P0718164	SET SCREW M6-1 X 10
169	P0718169	CAP SCREW M5-.8 X 16
170	P0718170	CLAMP ASSEMBLY
171	P0718171	CLAMP HORIZONTAL SUPPORT
172	P0718172	CLAMP PAD
173	P0718173	FLAT HD SCR M6-1 X 16
174	P0718174	FENCE CONNECTING ROD

BUY PARTS ONLINE AT GRIZZLY.COM!
Scan QR code to visit our Parts Store.

Headstock

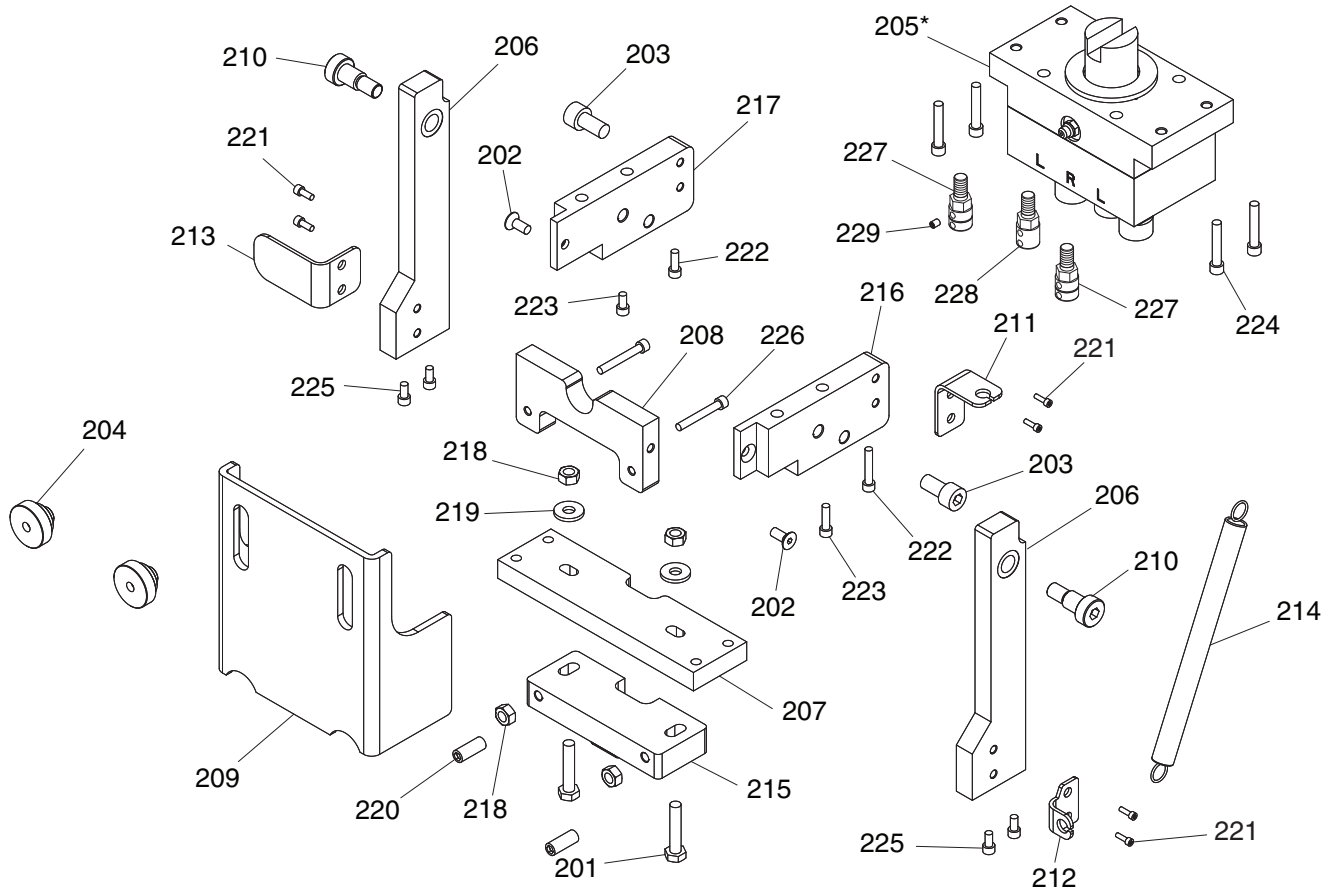

REF	PART #	DESCRIPTION
201	P0718201	HEX BOLT M6-1 X 30
202	P0718202	FLAT HD SCR M5-.8 X 12
203	P0718203	CAP SCREW M8-1.25 X 12
204	P0718204	KNURLED KNOB
205*	P0718205	BORING HEAD 45 X 9.5MM
205*	P0718205	BORING HEAD 48 X 6MM
205*	P0718205	BORING HEAD 52 X 5.5MM
206	P0718206	PIVOT ARM
207	P0718207	PIVOT ARM FRONT BRACE
208	P0718208	GUARD BRACKET
209	P0718209	BORING HEAD GUARD
210	P0718210	PIVOT ARM STEP BOLT
211	P0718211	UPPER SPRING BRACKET
212	P0718212	LOWER SPRING BRACKET
213	P0718213	L-BRACKET
214	P0718214	PIVOT ARM EXTENSION SPRING

REF	PART #	DESCRIPTION
215	P0718215	STOP BRACKET
216	P0718216	BORING HEAD RIGHT SUPPORT
217	P0718217	BORING HEAD LEFT SUPPORT
218	P0718218	HEX NUT M6-1
219	P0718219	FLAT WASHER 6MM
220	P0718220	SET SCREW M6-1 X 30
221	P0718221	CAP SCREW M5-.8 X 12
222	P0718222	CAP SCREW M6-1 X 55
223	P0718223	CAP SCREW M6-1 X 45
224	P0718224	CAP SCREW M6-1 X 65
225	P0718225	CAP SCREW M5-.8 X 16
226	P0718226	CAP SCREW M6-1 X 25
227	P0718227	LEFT BIT ARBOR
228	P0718228	RIGHT BIT ARBOR
229	P0718229	SET SCREW M5-.8 X 5

* Optional Equipment Purchased Separately

BUY PARTS ONLINE AT GRIZZLY.COM!
Scan QR code to visit our Parts Store.

Handle

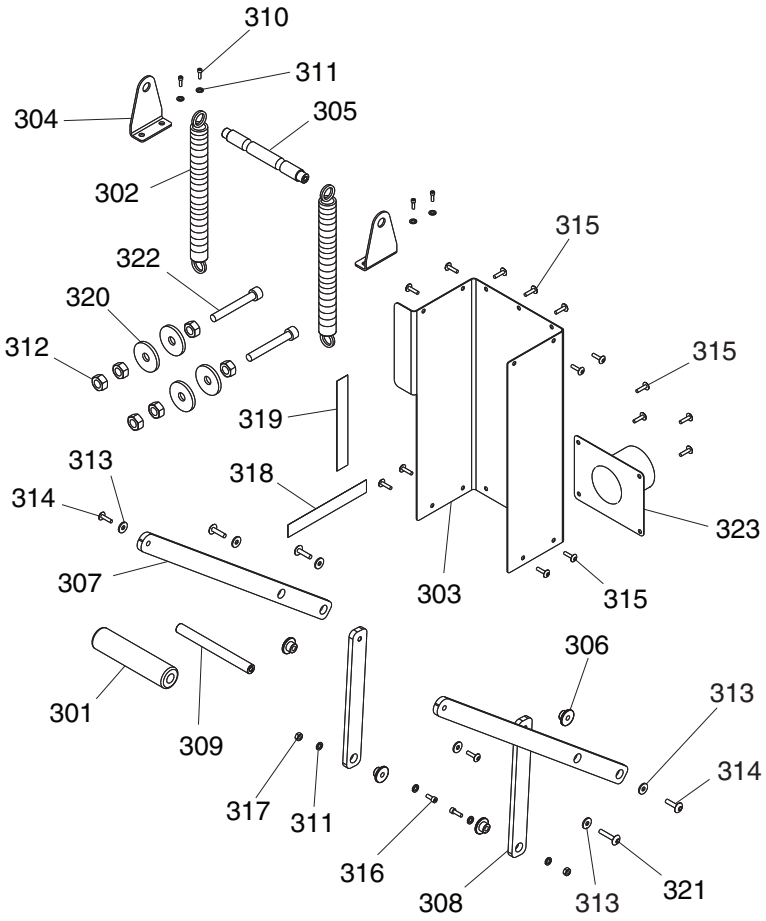

REF	PART #	DESCRIPTION
301	P0718301	HANDLE
302	P0718302	HEADSTOCK EXTENSION SPRING
303	P0718303	COLUMN COVER
304	P0718304	HEADSTOCK SPRING BRACKET
305	P0718305	UPPER SPRING ROD
306	P0718306	PIVOT CONNECTOR
307	P0718307	HANDLE PIVOT BAR
308	P0718308	VERTICAL PIVOT BAR
309	P0718309	LOWER SPRING ROD
310	P0718310	CAP SCREW M8-1.25 X 16
311	P0718311	LOCK WASHER 8MM
312	P0718312	HEX NUT M8-1.25

REF	PART #	DESCRIPTION
313	P0718313	FLAT WASHER 8MM
314	P0718314	BUTTON HD CAP SCR M8-1.25 X 20
315	P0718315	BUTTON HD CAP SCR M6-1 X 12
316	P0718316	CAP SCREW M8-1.25 X 40
317	P0718317	LOCK NUT M10-1.5
318	P0718318	HORIZONTAL SCALE 0-10MM
319	P0718319	VERTICAL SCALE 10-0MM
320	P0718320	FENDER WASHER 8MM
321	P0718321	BUTTON HD CAP SCR M8-1.25 X 25
322	P0718322	CAP SCREW M8-1.25 X 50
323	P0718323	DUST PORT 4"

BUY PARTS ONLINE AT GRIZZLY.COM!
Scan QR code to visit our Parts Store.

Machine Labels

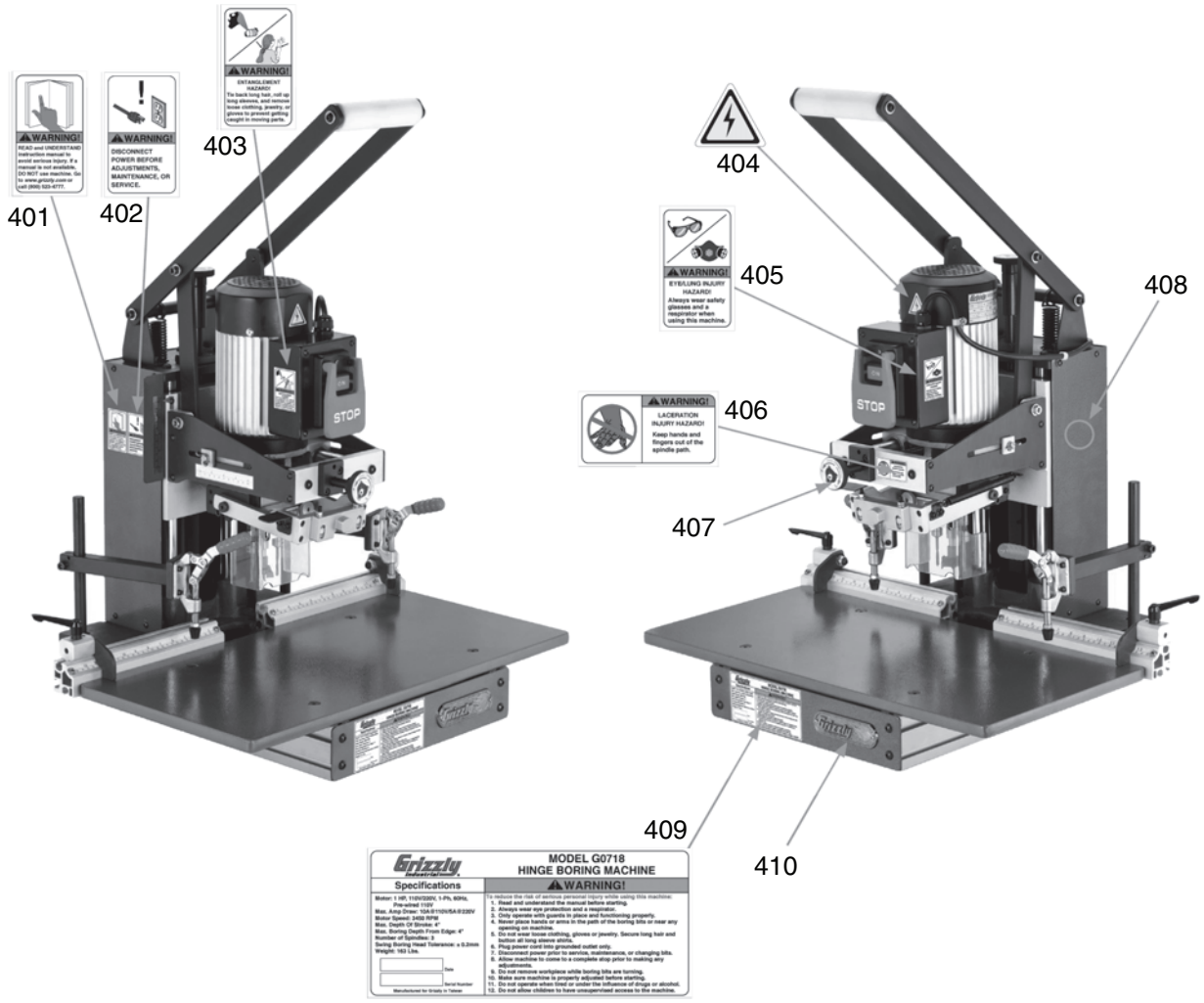

REF	PART #	DESCRIPTION
401	P0718401	READ MANUAL LABEL
402	P0718402	DISCONNECT POWER LABEL
403	P0718403	ENTANGLEMENT HAZARD LABEL
404	P0718404	ELECTRICITY LABEL
405	P0718405	EYE/LUNG HAZARD LABEL

REF	PART #	DESCRIPTION
406	P0718406	LACERATION HAZARD LABEL
407	P0718407	DIMENSION LABEL
408	P0718408	GRIZZLY GREEN TOUCH-UP PAINT
409	P0718409	MACHINE ID LABEL
410	P0718410	GRIZZLY LOGO PLATE

⚠WARNING

Safety labels help reduce the risk of serious injury caused by machine hazards. If any label comes off or becomes unreadable, the owner of this machine MUST replace it in the original location before resuming operations. For replacements, contact (800) 523-4777 or www.grizzly.com.

BUY PARTS ONLINE AT GRIZZLY.COM!
Scan QR code to visit our Parts Store.