Headstock Housing 1

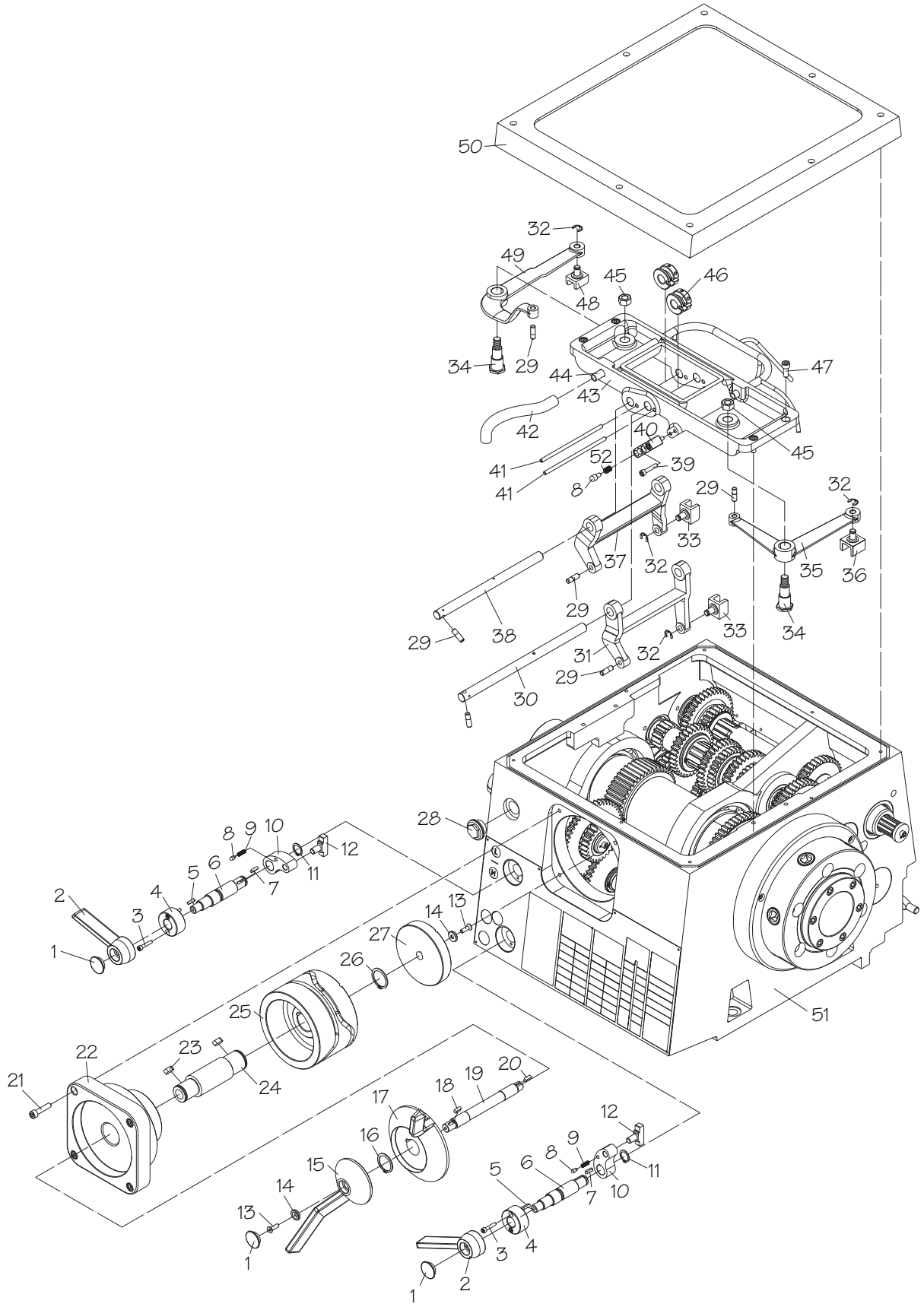

Headstock Housing 2

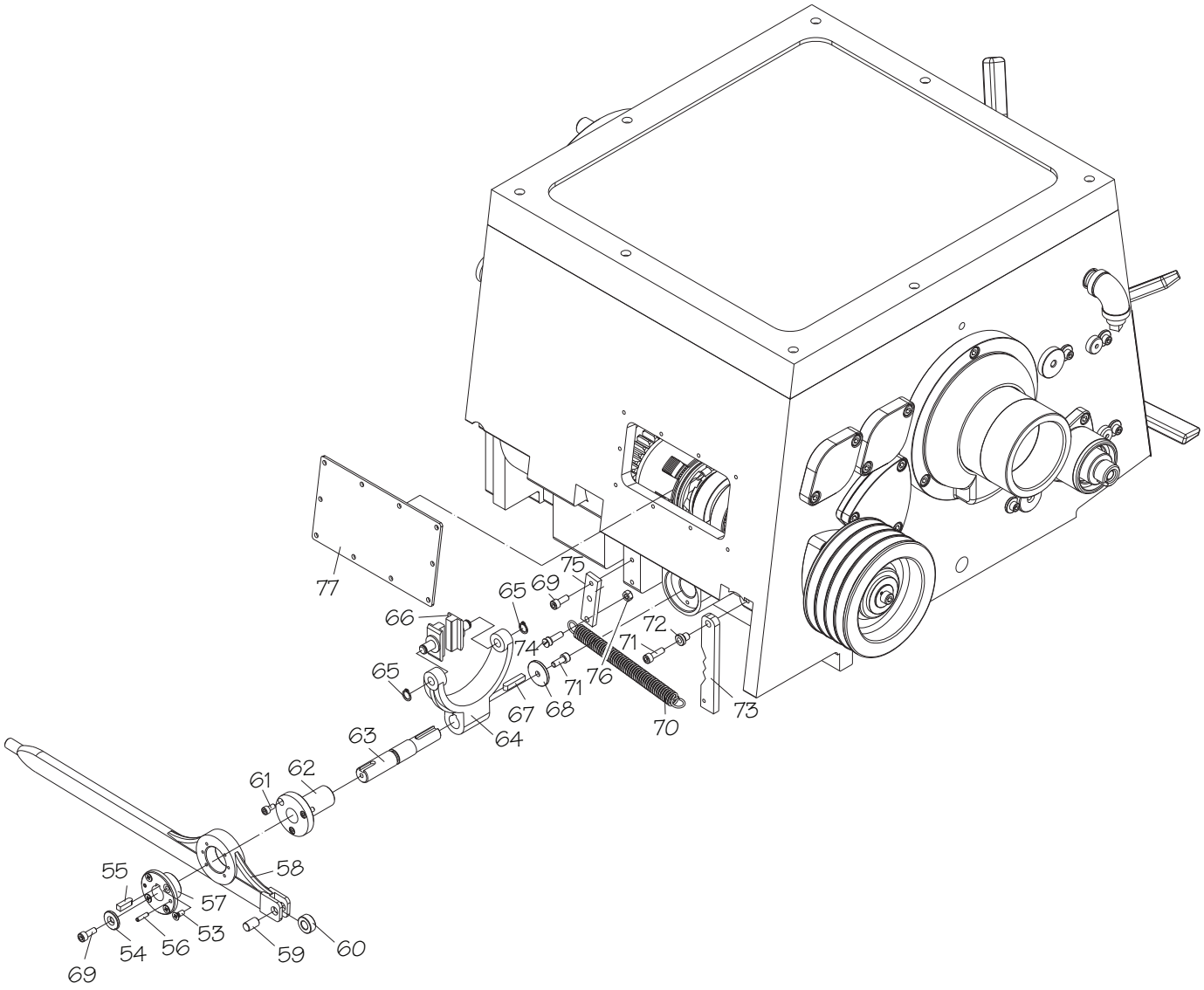

Headstock Housing Parts List

REF	PART #	DESCRIPTION
1	PSB1046PF0001	SHIFT LEVER END CAP
2	PSB1046PF0002	SHIFT LEVER
3	PCAP38M	CAP SCREW M5-.8 X 25
4	PSB1046PF0004	SHAFT COLLAR
5	PK47M	KEY 4 X 4 X 15
6	PSB1046PF0006	SHIFT LEVER SHAFT
7	PK48M	KEY 4 X 4 X 20
8	PSB1046PF0008	DETENT PIN
9	PSB1046PF0009	COMPRESSION SPRING
10	PSB1046PF0010	SHIFT KNUCKLE
11	PR07M	EXT RETAINING RING 18MM
12	PSB1046PF0012	SHIFT TAB
13	PS107M	PHLP HD SCR M6-1 X 20
14	PSB1046PF0014	LEVER BEVELED WASHER
15	PSB1046PF0015	SPEED SELECTION LEVER
16	PR15M	EXT RETAINING RING 30MM
17	PSB1046PF0017	RANGE SELECTION LEVER
18	PK19M	KEY 5 X 5 X 14
19	PSB1046PF0019	SPEED SLECTOR SHAFT
20	PK19M	KEY 5 X 5 X 14
21	PCAP40M	CAP SCREW M8-1.25 X 35
22	PSB1046PF0022	LEVER HOUSING
23	PK82M	KEY 7 X 7 X 18
24	PSB1046PF0024	RANGE SELECTOR SHAFT
25	PSB1046PF0025	SELECTOR SLEEVE
26	PR12M	EXT RETAINING RING 35MM
27	PSB1046PF0027	SELECTOR DISC
28	PSB1046PF0028	SIGHT GLASS
29	PSB1046PF0029	STEP PIN
30	PSB1046PF0030	UPPER PIVOT ROD
31	PSB1046PF0031	UPPER SHIFT YOKE
32	PEC03M	E-CLIP 10MM
33	PSB1046PF0033	SHIFT FORK
34	PSB1046PF0034	SHIFT ARM PIVOT BOLT
35	PSB1046PF0035	SHIFT ARM
36	PSB1046PF0036	SHIFT FORK
37	PSB1046PF0037	LOWER SHIFT YOKE
38	PSB1046PF0038	LOWER PIVOT ROD
39	PCAP07M	CAP SCREW M6-1 X 30
40	PSB1046PF0040	DETENT BRACKET
41	PSB1046PF0041	SHIFT LIMIT PIN
42	PSB1046PF0042	OIL TUBE
43	PSB1046PF0043	SHIFT YOKE FRAME
44	PSB1046PF0044	OIL FITTING
45	PSB1046PF0045	PIVOT ARM BOLT HEX NUT
46	PSB1046PF0046	PIVOT ROD LOCK COLLARS
47	PCAP14M	CAP SCREW M8-1.25 X 20
48	PSB1046PF0048	SHIFT FORK
49	PSB1046PF0049	OUTBOARD SIDE SHIFT LEVER
50	PSB1046PF0050	HEADSTOCK TOP COVER
51	PSB1046PF0051	HEADSTOCK CASTING (SB1046PF-48PF
51	PSB1056F0051	HEADSTOCK CASTING (SB1056F-58F)
52	PSB1046PF0052	COMPRESSION SPRING
53	PFH05M	FLAT HD SCR M5-.8 X 12
54	PW03M	FLAT WASHER 6MM
55	PK07M	KEY 6 X 6 X 20
56	PRP76M	ROLL PIN 4 X 16
57	PSB1046PF0057	FLANGE BUSHING
58	PSB1046PF0058	LEVER
59	PSB1046PF0059	PIVOT PIN
60	PSB1046PF0060	LEVER ROLLER
61	PCAP50M	CAP SCREW M5-.8 X 10
62	PSB1046PF0062	INNER LEVER SLEEVE
63	PSB1046PF0063	LEVER SHAFT
64	PSB1046PF0064	SHIFT FORK
65	PR01M	EXT RETAINING RING 10MM
66	PSB1046PF0066	SHIFT TAB
67	PK42M	KEY 6 X 6 X 30
68	PSB1046PF0068	RETAINING FLAT WASHER 6MM
69	PCAP01M	CAP SCREW M6-1 X 16
70	PSB1046PF0070	EXTENSION SPRING
71	PCAP02M	CAP SCREW M6-1 X 20
72	PSB1046PF0072	BUSHING
73	PSB1046PF0073	DETENT PLATE
74	PSB1046PF0074	SPRING HANGER
75	PSB1046PF0075	SPRING PLATE
76	PN01M	HEX NUT M6-1
77	PSB1046PF0077	HEADSTOCK REAR COVER

Headstock Gears 1

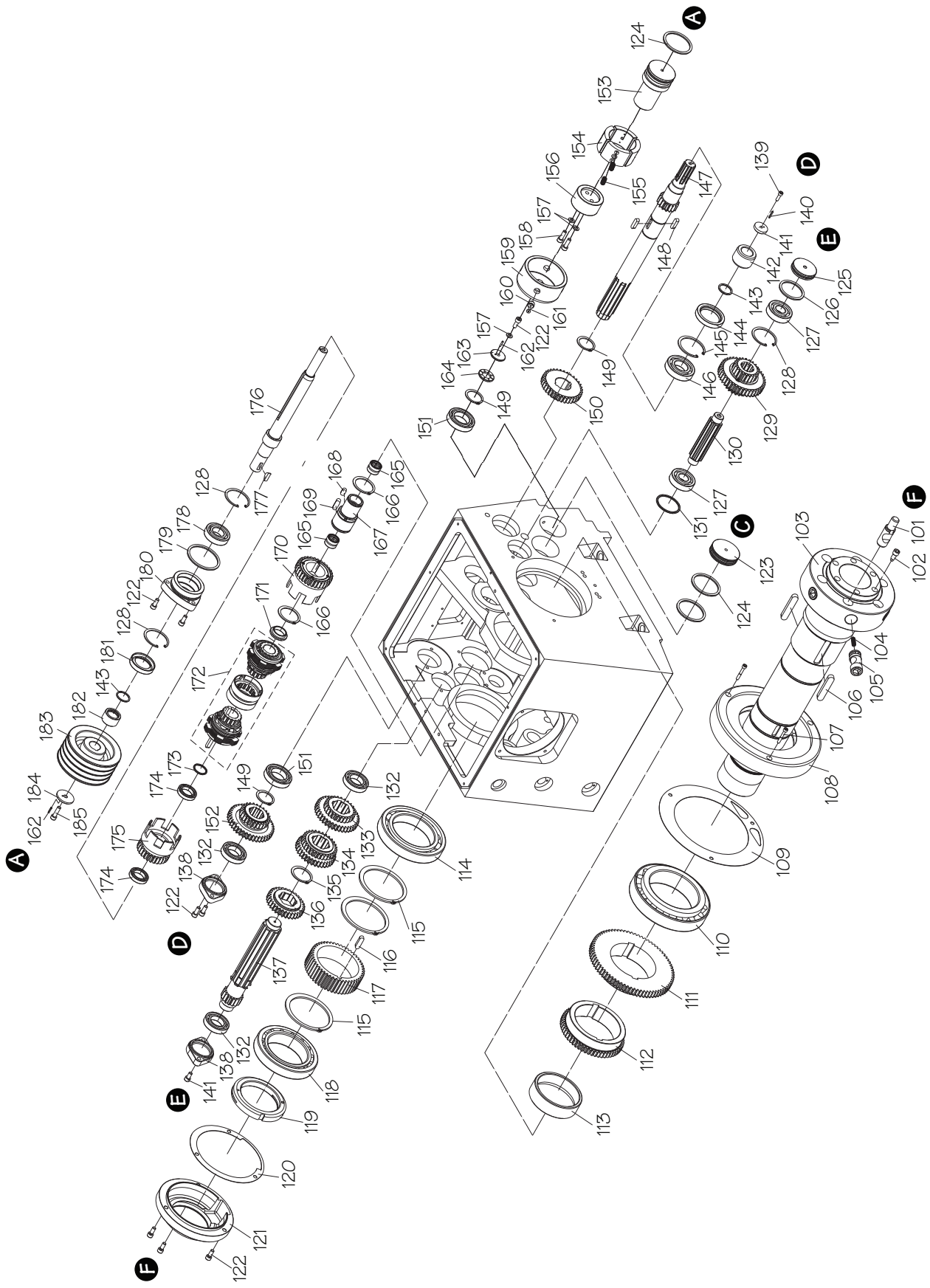

Headstock Gears 2

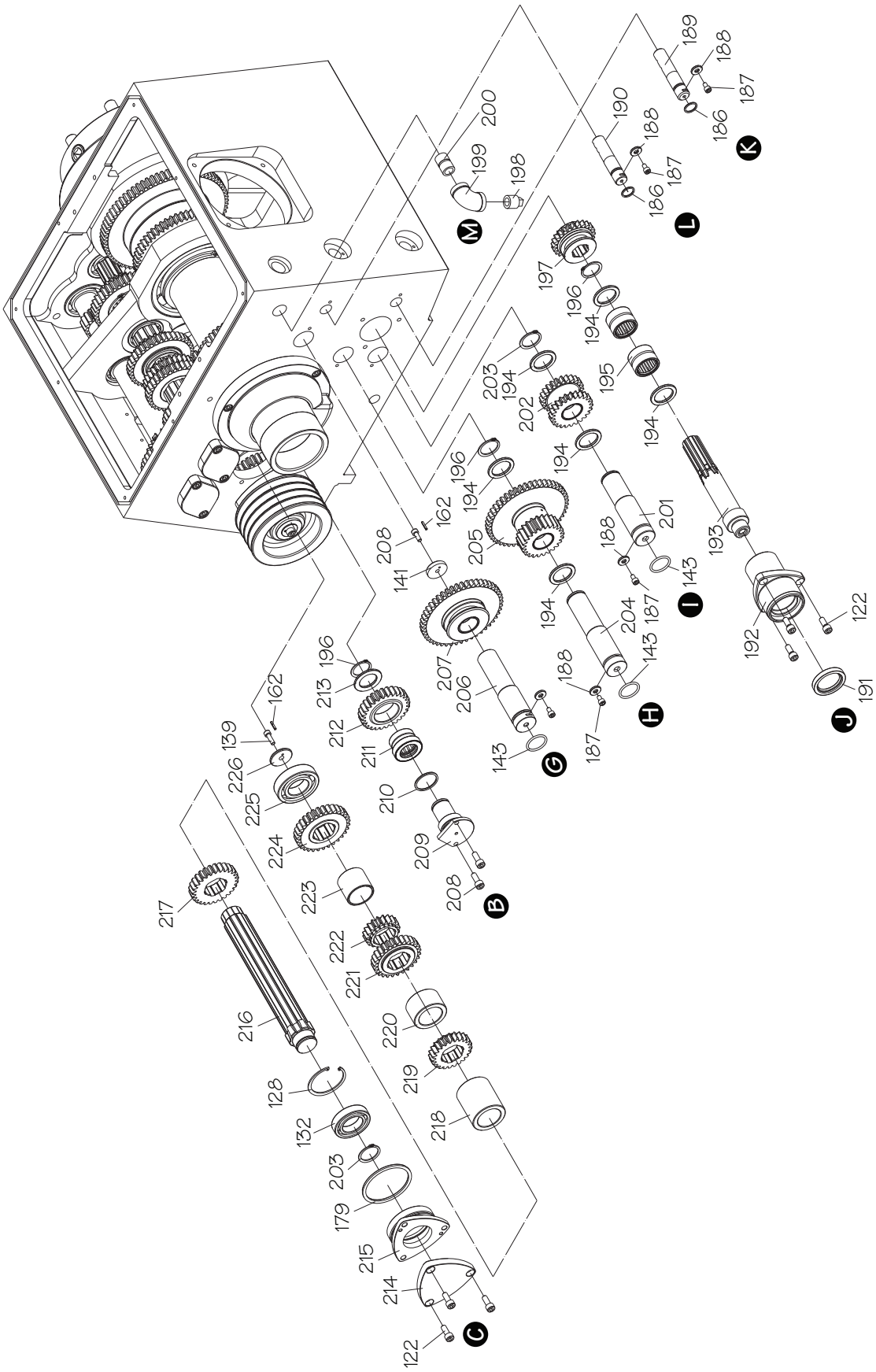

Headstock Gears Parts List

REF	PART #	DESCRIPTION
101	PSB1046PF0101	CAMLOCK STUD
102	PSB1046PF0102	SPINDLE BOLT
103	PSB1046PF0103	SPINDLE
104	PSB1046PF0104	COMPRESSION SPRING
105	PSB1046PF0105	CAMLOCK
106	PSB1046PF0106	KEY 15 X 10 X 78
107	PCAP29M	CAP SCREW M6-1 X 40
108	PSB1046PF0108	FRONT BEARING COVER
109	PSB1046PF0109	INBOARD SPINDLE GASKET
110	P32026	TAPERED BEARING 32026
111	PSB1046PF0111	GEAR 75T
112	PSB1046PF0112	GEAR 56T
113	PSB1046PF0113	SPINDLE SPACER
114	P6022-OPEN	BALL BEARING 6022 OPEN
115	PR90M	EXT RETANING RING 110MM
116	PK114M	KEY 10 X 8 X 35
117	PSB1046PF0117	GEAR 48T
118	P32021	TAPER BEARING 32021
119	PSB1046PF0119	SPANNER NUT
120	PSB1046PF0120	OUTBOARD SPINDLE GASKET
121	PSB1046PF0121	REAR BEARING COVER
122	PCAP14M	CAP SCREW M8-1.25 X 20
123	PSB1046PF0123	PLUG
124	PORG065	O-RING 64.4 X 3.1 G65
125	PSB1046PF0125	PLUG
126	PORG055	O-RING 54.4 X 3.1 G55
127	P6305-OPEN	BALL BEARING 6305 OPEN
128	PR38M	INT RETAINING RING 62MM
129	PSB1046PF0129	COMBO GEAR 21T/40T
130	PSB1046PF0130	SPLINED SHAFT
131	PSB1046PF0131	COLLAR
132	P6007-OPEN	BALL BEARING 6007 OPEN
133	PSB1046PF0133	COMBO GEAR 26T/38T
134	PSB1046PF0134	COMBO GEAR 30T/34T
135	PR32M	EXT RETAINING RING 48MM
136	PSB1046PF0136	GEAR 32T
137	PSB1046PF0137	GEAR SHAFT 16T
138	PSB1046PF0138	SPLINED SHAFT COVER
139	PCAP02M	CAP SCREW M6-1 X 20
140	PRP02M	ROLL PIN 3 X 16
141	PSB1046PF0141	SHAFT COVER PLATE
142	PSB1046PF0142	SPACER
143	PORP030	O-RING 29.7 X 3.5 P30
144	PSB1046PF0144	OIL SEAL 507212
145	PR64M	INT RETAINING RING 72MM
146	P6207-RS	BALL BEARING 6207-RS
147	PSB1046PF0147	SPLINED GEAR SHAFT 16T
148	PK136M	KEY 8 X 8 X 30
149	PR68M	EXT RETAINING RING 40MM
150	PSB1046PF0150	GEAR 35T

REF	PART #	DESCRIPTION
151	P6008-OPEN	BALL BEARING 6008 OPEN
152	PSB1046PF0152	COMBO GEAR 25T/40T
153	PSB1046PF0153	BRAKE DRUM SHAFT
154	PSB1046PF0154	BRAKE SHOE
155	PSB1046PF0155	COMPRESSION SPRING
156	PSB1046PF0156	BRAKE DRUM
157	PW01M	FLAT WASHER 8MM
158	PCAP31M	CAP SCREW M8-1.25 X 25
159	PSB1046PF0159	CENTRIFUGAL BRAKE CYLINDER
160	PSB1046PF0160	BRAKE SHOE BUSHING
161	PS11M	PHLP HD SCR M6-1 X 16
162	PSB1046PF0162	RETAINER PIN
163	PSB1046PF0163	BRAKE ASSEMBLY FLAT WASHER
164	PSB1046PF0164	BRAKE ASSEMBLY COLLAR
165	PSB1046PF0165	NEEDLE ROLLER BEARING NK22/20
166	PR43M	EXT RETAINING RING 50MM
167	PSB1046PF0167	SHAFT
168	PSB1046PF0168	KEY 10 X 7 X 18
169	PSB1046PF0169	KEY 10 X 7 X 30
170	PSB1046PF0170	CLUTCH/GEAR ASSEMBLY 31T
171	PSB1046PF0171	OUTBOARD COPPER COLLAR
172	PSB1046PF0172	CLUTCH ASSEMBLY
173	PSB1046PF0173	INBOARD COPPER COLLAR
174	P6906-OPEN	BALL BEARING 6906-OPEN
175	PSB1046PF0175	CLUTCH/GEAR ASSY 27T
176	PSB1046PF0176	CLUTCH ASSEMBLY SHAFT
177	PSB1046PF0177	WOODRUFF KEY 25 X 7
178	P6206-OPEN	BALL BEARING 6206 OPEN
179	PORG075	O-RING 74.4 X 3.1 G75
180	PSB1046PF0180	BEARING SEAT
181	PSB1046PF0181	OIL SEAL 406212
182	PSB1046PF0182	PULLEY SPACER
183	PSB1046PF0183	SPINDLE PULLEY
184	PSB1046PF0184	PULLEY FLAT WASHER
185	PCAP13M	CAP SCREW M8-1.25 X 30
186	PORP016	O-RING 15.8 X 2.4 P16
187	PCAP26M	CAP SCREW M6-1 X 12
188	PSB1046PF0188	SHAFT RETAINING FLAT WASHER
189	PSB1046PF0189	CHANGE GEAR SHAFT
190	PSB1046PF0190	CHANGE GEAR SHAFT
191	PSB1046PF0191	OIL SEAL 385508
192	PSB1046PF0192	SHAFT HOUSING
193	PSB1046PF0193	SPINED SHAFT
194	PSB1046PF0194	SPLINED SHAFT SPACER
195	PSB1046PF0195	NEEDLE BEARING 32 X 30
196	PR15M	EXT RETAINING RING 30MM
197	PSB1046PF0197	GEAR 24T
198	PSB1046PF0198	OIL DRAIN PLUG 1/2" NPT
199	PSB1046PF0199	ELBOW 3/4 X 1/2" NPT
200	PSB1046PF0200	COUPLER 3/4" NPT

Headstock Gears Parts List

REF	PART #	DESCRIPTION
201	PSB1046PF0201	CHANGE GEAR SHAFT
202	PSB1046PF0202	GEAR 24T
203	PR37M	EXT RETAINING RING 32MM
204	PSB1046PF0204	CHANGE GEAR SHAFT
205	PSB1046PF0205	COMBO GEAR 24T/48T
206	PSB1046PF0206	CHANGE GEAR SHAFT
207	PSB1046PF0207	COMBO GEAR 48T/24T
208	PCAP01M	CAP SCREW M6-1 X 16
209	PSB1046PF0209	CHANGE GEAR SHAFT
210	PORG035	O-RING 3.1 X 34.4 G35
211	PSB1046PF0211	NEEDLE ROLLER BEARING NAX3030
212	PSB1046PF0212	GEAR 28T
213	PSB1046PF0213	CHANGE SPACER

REF	PART #	DESCRIPTION
214	PSB1046PF0214	SHAFT COVER PLATE
215	PSB1046PF0215	FLANGED BEARING
216	PSB1046PF0216	SPLINED SHAFT
217	PSB1046PF0217	GEAR 27T
218	PSB1046PF0218	SPACER
219	PSB1046PF0219	GEAR 23T
220	PSB1046PF0220	SPACER
221	PSB1046PF0221	GEAR 27T
222	PSB1046PF0222	GEAR 19T
223	PSB1046PF0223	SPACER
224	PSB1046PF0224	GEAR 31T
225	P6207-OPEN	BALL BEARING 6207-OPEN
226	PSB1046PF0226	BEARING RETAINER

Gearbox 1

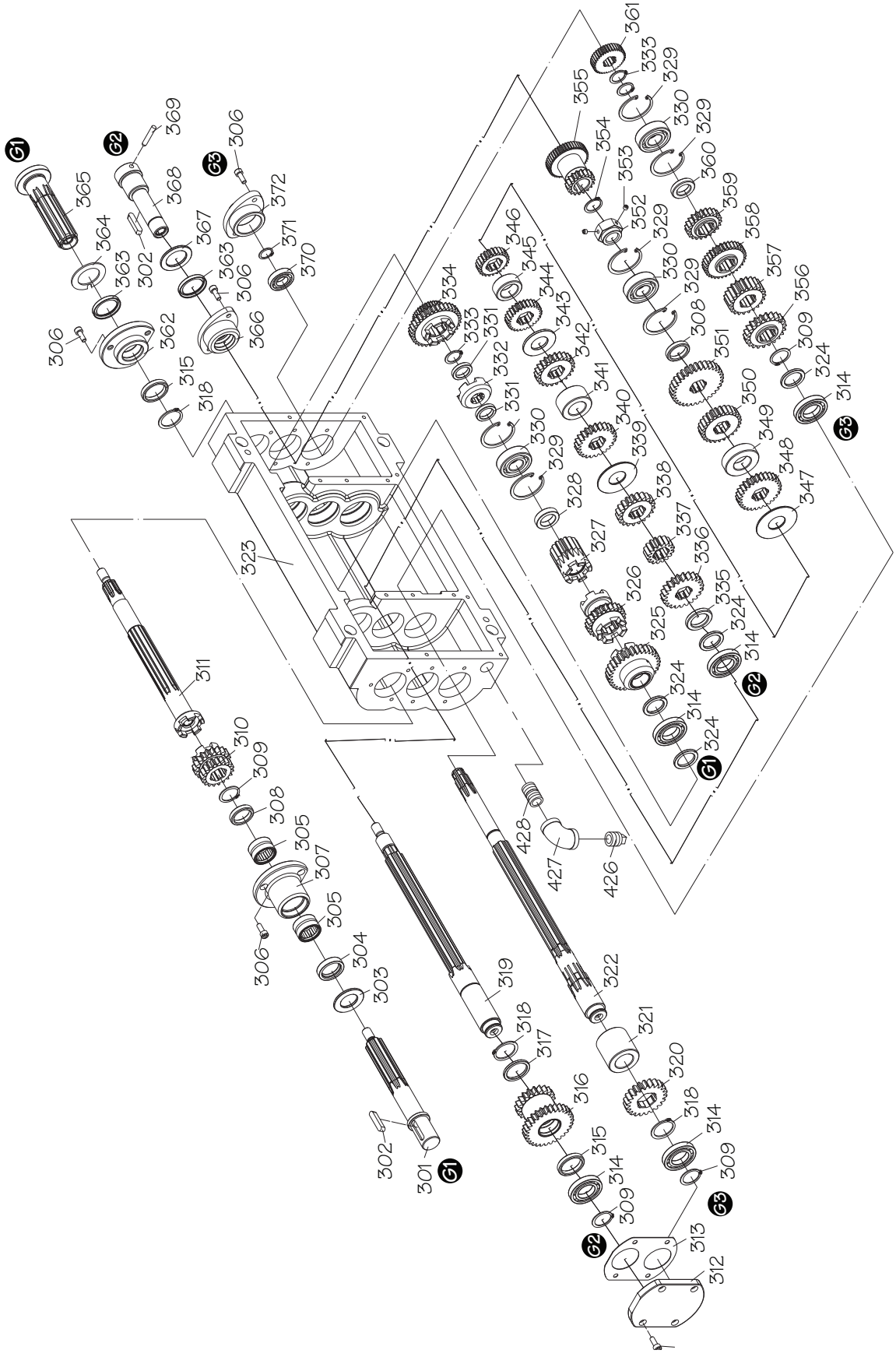

361
333
329
330
329
360
359
358
357
356
309
324
314
G3
355
354
353
352
329
330
329
308
351
350
349
348
347
346
345
344
343
342
341
340
339
338
337
336
335
324
314
G2
334
333
331
332
331
330
329
328
327
326
325
324
314
324
G1
323
369
G2
368
367
363
306
366
372
371
370
G3
365
364
363
362
306
315
318
311
310
309
308
305
307
305
306
304
303
302
301
G1
319
318
317
316
315
314
309
G2
322
321
320
318
314
309
G3
313
312
428
427
426

Gearbox 2

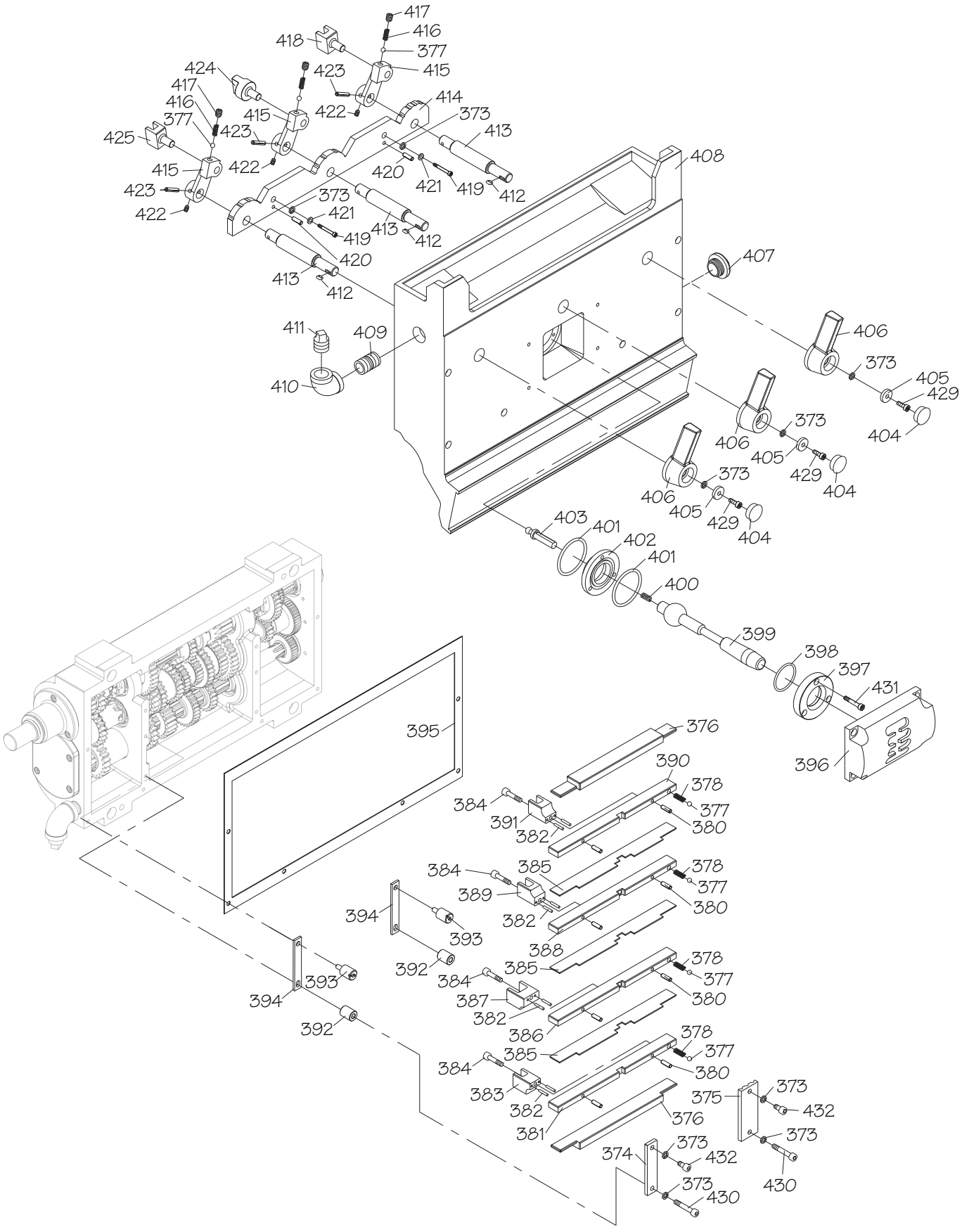
417
416
418
377
415
424
423
417
416
415
422
414
373
377
423
413
425
422
415
420
421
419
412
408
423
373
422
421
413
419
412
420
413
412
407
411
409
406
410
373
405
429
404
373
406
405
429
404
373
406
405
429
404
403
401
402
401
400
399
398
397
431
395
376
396
390
378
384
377
391
380
382
384
385
378
377
389
380
394
382
393
388
392
385
378
384
377
393
387
380
394
382
392
386
378
385
377
384
380
383
373
375
432
382
376
381
373
374
432
373
430
430

Gearbox Parts List

REF	PART #	DESCRIPTION
301	PSB1046PF0301	SPLINED SHAFT
302	PK109M	KEY 7 X 7 X 35
303	PSB1046PF0303	SHAFT SPACER
304	PSB1046PF0304	OIL SEAL 253708
305	PSB1046PF0305	NEEDLE BEARING
306	PCAP01M	CAP SCREW M6-1 X 16
307	PSB1046PF0307	SPLINED SHAFT SEAT
308	PSB1046PF0308	SPACER
309	PR11M	EXT RETAINING RING 25MM
310	PSB1046PF0310	GEAR 19T/19T
311	PSB1046PF0311	SPLINED SHAFT
312	PSB1046PF0312	SHAFT COVER
313	PSB1046PF0313	COVER GASKET
314	P6005-OPEN	BALL BEARING 6005 OPEN
315	PSB1046PF0315	SPACER
316	PSB1046PF0316	GEAR 20T/30T
317	PSB1046PF0317	SPACER
318	PR15M	EXT RETAINING RING 30MM
319	PSB1046PF0319	SPLINED SHAFT
320	PSB1046PF0320	GEAR 22T
321	PSB1046PF0321	SHAFT SPACER
322	PSB1046PF0322	SPLINED SHAFT
323	PSB1046PF0323	GEARBOX CASTING
324	PSB1046PF0324	SPACER
325	PSB1046PF0325	GEAR 32T
326	PSB1046PF0326	GEAR 23T
327	PSB1046PF0327	GEAR 16T
328	PSB1046PF0328	SPACER
329	PR25M	INT RETAINING RING 47MM
330	P6204-OPEN	BALL BEARING 6204-OPEN
331	PSB1046PF0331	SPACER
332	PSB1046PF0332	SHAFT CLUTCH
333	PR09M	EXT RETAINING RING 20MM
334	PSB1046PF0334	COMBO GEAR 35T/35T
335	PSB1046PF0335	SPACER
336	PSB1046PF0336	GEAR 22T
337	PSB1046PF0337	GEAR 16T
338	PSB1046PF0338	GEAR 20T
339	PSB1046PF0339	SPACER
340	PSB1046PF0340	GEAR 24T
341	PSB1046PF0341	SPACER
342	PSB1046PF0342	GEAR 23T
343	PSB1046PF0343	SPACER
344	PSB1046PF0344	GEAR 27T
345	PSB1046PF0345	SPACER
346	PSB1046PF0346	GEAR 24T
347	PSB1046PF0347	SPACER
348	PSB1046PF0348	GEAR 28T
349	PSB1046PF0349	SPACER
350	PSB1046PF0350	GEAR 26T
351	PSB1046PF0351	GEAR 32T
352	PSB1046PF0352	SHAFT NUT
353	PSS02M	SET SCREW M6-1 X 6
354	PR10M	EXT RETAINING RING 22MM
355	PSB1046PF0355	COMBO GEAR 45T/18T
356	PSB1046PF0356	GEAR 22T
357	PSB1046PF0357	GEAR 22T
358	PSB1046PF0358	GEAR 33T
359	PSB1046PF0359	GEAR 22T
360	PSB1046PF0360	SPACER
361	PSB1046PF0361	GEAR 36T
362	PSB1046PF0362	SHAFT SEAT
363	PSB1046PF0363	OIL SEAL 304005
364	PSB1046PF0364	SPACER
365	PSB1046PF0365	SPLINED SHAFT
366	PSB1046PF0366	SHAFT SEAT
367	PSB1046PF0367	SPACER
368	PSB1046PF0368	SHAFT
369	PSB1046PF0369	PIN 6 X 36
370	P6003-OPEN	BALL BEARING 6003 OPEN
371	PR18M	EXT RETAINING RING 17MM
372	PSB1046PF0372	BEARING SEAT
373	PLW03M	LOCK WASHER 6MM
374	PSB1046PF0374	PLATE
375	PSB1046PF0375	REVERSE STOP PLATE
376	PSB1046PF0376	UPPER/LOWER PLATE
377	PSTB001	STEEL BALL 1/4
378	PSB1046PF0378	COMPRESSION SPRING
380	PRP24M	ROLL PIN 5 X 16
381	PSB1046PF0381	BOTTOM SHIFT FORK SUPPORT
382	PRP24M	ROLL PIN 5 X 16
383	PSB1046PF0383	BOTTOM SHIFT FORK
384	PCAP15M	CAP SCREW M5-.8 X 20
385	PSB1046PF0385	PARTITION
386	PSB1046PF0386	LOWER-MID SHIFT FORK SUPPORT
387	PSB1046PF0387	LOWER-MID SHIFT FORK
388	PSB1046PF0388	UPPER-MID SHIFT FORK SUPPORT
389	PSB1046PF0389	UPPER-MID SHIFT FORK
390	PSB1046PF0390	TOP SHIFT FORK SUPPORT
391	PSB1046PF0391	TOP SHIFT FORK
392	PSB1046PF0392	SPACER
393	PSB1046PF0393	PARTITION NUT
394	PSB1046PF0394	PARTITION PLATE
395	PSB1046PF0395	GEARBOX GASKET
396	PSB1046PF0396	SHIFT GATE
397	PSB1046PF0397	SELECTOR LEVER RETAINER
398	PORG035	O-RING 3.1 X 34.4 G35
399	PSB1046PF0399	SELECTOR LEVER
400	PSB1046PF0400	COMPRESSION SPRING
401	PORG040	O-RING 39.4 X 3.1 G40
402	PSB1046PF0402	SELECTOR LEVER BASE

Gearbox Parts List

REF	PART #	DESCRIPTION
403	PSB1046PF0403	SELECTOR LEVER PIN
404	PSB1046PF0404	LEVER CAP
405	PSB1046PF0405	LEVER RETAINING FLAT WASHER
406	PSB1046PF0406	SHIFT LEVER
407	PSB1046PF0407	SIGHT GLASS
408	PSB1046PF0408	GEARBOX COVER (SB1046PF-48PF)
408	PSB1056F0408	GEARBOX COVER (SB1056F-58F)
409	PSB1046PF0409	COUPLER 3/4" NPT
410	PSB1046PF0410	ELBOW 3/4" NPT
411	PSB1046PF0411	OIL FILL PLUG 3/4" NPT
412	PK05M	KEY 4 X 4 X 10
413	PSB1046PF0413	SELECTOR SHAFT
414	PSB1046PF0414	SELECTOR BAR
415	PSB1046PF0415	SHIFT KNUCKLE
416	PSB1046PF0416	COMPRESSION SPRING
417	PSS20M	SET SCREW M8-1.25 X 8

REF	PART #	DESCRIPTION
418	PSB1046PF0418	SHIFT FORK
419	PCAP02M	CAP SCREW M6-1 X 20
420	PRP24M	ROLL PIN 5 X 16
421	PW03M	FLAT WASHER 6MM
422	PSS02M	SET SCREW M6-1 X 6
423	PRP04M	ROLL PIN 4 X 24
424	PSB1046PF0424	SHIFT TAB
425	PSB1046PF0425	SHIFT FORK
426	PSB1046PF0426	SQUARE HEAD PLUG 1/2" NPT
427	PSB1046PF0427	PIPE ELBOW 1/2" NPT
428	PSB1046PF0428	COUPLER 1/2" NPT
429	PCAP26M	CAP SCREW M6-1 X 12
430	PCAP29M	CAP SCREW M6-1 X 40
431	PCAP38M	CAP SCREW M5-.8 X 25
432	PCAP01M	CAP SCREW M6-1 X 16

Apron 1

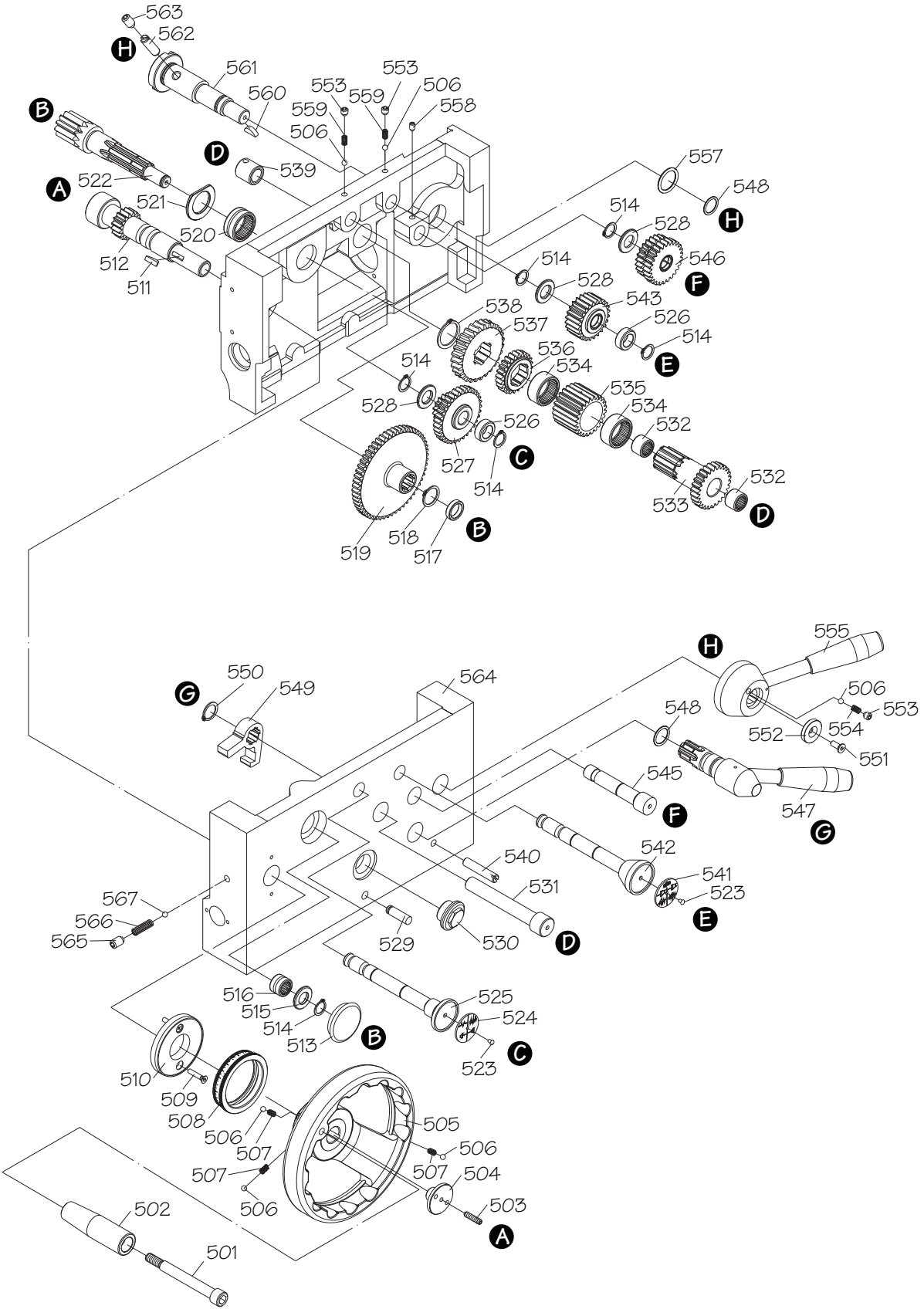
563
562
H
561
560
553
553
559
559
506
506
558
B
D
539
A
522
521
520
512
511
557
548
H
514
528
546
F
514
528
543
526
514
E
538
537
536
534
535
534
532
514
528
526
527
C
514
532
533
D
519
518
517
B
555
H
550
549
G
564
506
553
548
552
554
551
545
F
547
G
542
540
541
531
523
E
567
566
565
529
530
D
516
515
514
513
B
525
524
523
C
510
509
508
506
507
505
506
507
507
504
506
503
A
502
501

Apron 2

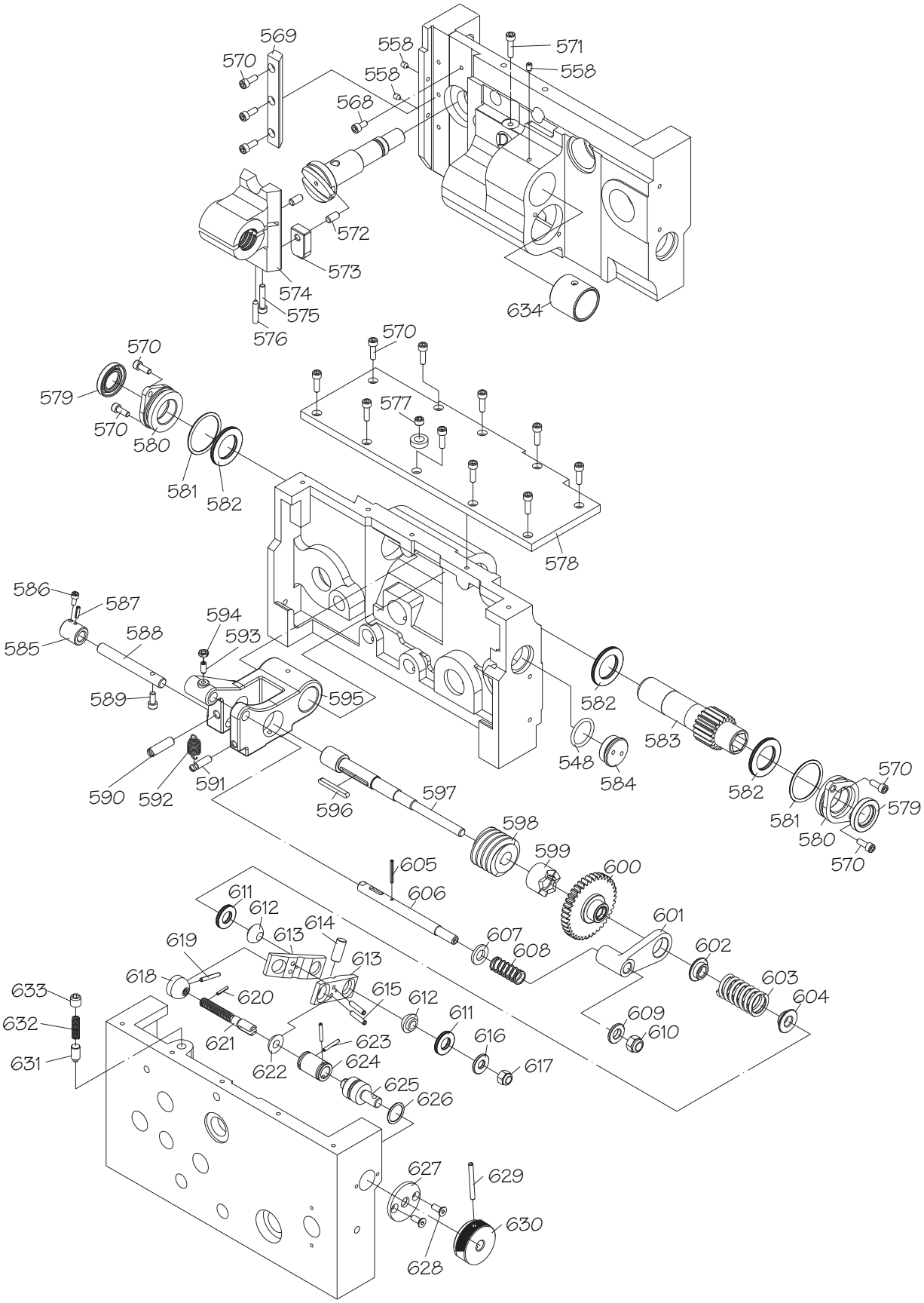
569
570
558
558
571
558
568
572
573
574
575
576
634
570
579
570
580
581
582
570
577
578
586
587
585
588
589
594
593
595
590
592
591
596
597
598
599
600
605
606
611
612
613
614
619
618
620
621
622
623
624
625
626
607
608
601
602
603
604
609
610
613
615
612
611
616
617
633
632
631
627
629
630
628
582
548
584
583
582
581
580
570
579
570

Apron Parts List

REF	PART #	DESCRIPTION
501	PSB1046PF0501	HANDLE CAP SCREW
502	PSB1046PF0502	HANDLE
503	PSS12M	SET SCREW M6-1 X 25
504	PSB1046PF0504	HANDWHEEL CENTER CAP
505	PSB1046PF0505	HANDWHEEL
506	PSTB001	STEEL BALL 1/4
507	PSB1046PF0507	COMPRESSION SPRING
508	PSB1046PF0508	GRADUATED DIAL
509	PFH05M	FLAT HD SCR M5-.8 X 12
510	PSB1046PF0510	GRADUATED DIAL BASE
511	PSB1046PF0511	WOODRUFF KEY 19 X 5
512	PSB1046PF0512	GEAR SHAFT
513	PSB1046PF0513	PLUG
514	PR07M	EXT RETAINING RING 18MM
515	PSB1046PF0515	SPACER
516	PSB1046PF0516	NEEDLE ROLLER BEARING 18/20
517	PSB1046PF0517	SPACER
518	PR11M	EXT RETAINING RING 25MM
519	PSB1046PF0519	GEAR 56T
520	PSB1046PF0520	NEEDLE ROLLER BEARING 28/20
521	PSB1046PF0521	NOTCHED SPACER
522	PSB1046PF0522	GEAR SHAFT
523	PRIV018M	STEEL FLUTED RIVET 2.8 X 10
524	PSB1046PF0524	KNOB LABEL
525	PSB1046PF0525	SHAFT
526	PSB1046PF0526	GEAR SPACER
527	PSB1046PF0527	COMBO GEAR 15T/33T
528	PSB1046PF0528	GEAR SPACER
529	PSB1046PF0529	APRON PIN
530	PSB1046PF0530	SIGHT GLASS
531	PSB1046PF0531	SHAFT
532	PSB1046PF0532	NEEDLE BEARING TLA1616
533	PSB1046PF0533	GEAR SHAFT 26T
534	PSB1046PF0534	NEEDLE ROLLER BEARING TLA3016
535	PSB1046PF0535	GEAR 24T
536	PSB1046PF0536	GEAR 24T
537	PSB1046PF0537	SPLINED GEAR
538	PR15M	EXT RETAINING RING 30MM
539	PSB1046PF0539	COLLAR
540	PSB1046PF0540	SLOTTED DOWEL PIN
541	PSB1046PF0541	INDICATOR PLATE
542	PSB1046PF0542	SHIFT SHAFT
543	PSB1046PF0543	GEAR 24T
545	PSB1046PF0545	GEAR SHAFT
546	PSB1046PF0546	GEAR 24T
547	PSB1046PF0547	HANDLE ASSEMBLY
548	PORP021	O-RING 20.8 X 2.4 P21
549	PSB1046PF0549	SHIFT KNUCKLE
550	PR81M	EXT RETAINING RING 21MM
551	PFH38M	FLAT HD SCR M6-1 X 16
552	PSB1046PF0552	LEVER HUB FLAT WASHER

REF	PART #	DESCRIPTION
553	PSS20M	SET SCREW M8-1.25 X 8
554	PSB1046PF0554	COMPRESSION SPRING
555	PSB1046PF0555	HALF-NUT LEVER ASSEMBLY
557	PSB1046PF0557	O-RING G-25
558	PSS03M	SET SCREW M6-1 X 8
559	PSB1046PF0559	COMPRESSION SPRING
560	PSB1046PF0560	WOODRUFF KEY 16 X 5MM
561	PSB1046PF0561	CAM SHAFT
562	PSS84M	SET SCREW M10-1.5 X 35
563	PSS30M	SET SCREW M10-1.5 X 10
564	PSB1046PF0564	APRON CASTING
565	PSS75M	SET SCREW M10-1.5 X 16
566	PSB1046PF0566	COMPRESSION SPRING
567	PSTB003	STEEL BALL 3/8"
568	PCAP26M	CAP SCREW M6-1 X 12
569	PSB1046PF0569	HALF-NUT GIB
570	PCAP01M	CAP SCREW M6-1 X 16
571	PCAP07M	CAP SCREW M6-1 X 30
572	PSB1046PF0572	DOWEL PIN
573	PSB1046PF0573	HALF-NUT PLATE
574	PSB1046PF0574	HALF-NUT ASSEMBLY
575	PCAP07M	CAP SCREW M6-1 X 30
576	PSS28M	SET SCREW M6-1 X 30
577	PSB1046PF0577	PLUG 1/4" NPT
578	PSB1046PF0578	APRON TOP PLATE
579	PSB1046PF0579	OIL SEAL 30 X 40 X 5
580	PSB1046PF0580	SLEEVE
581	PORG045	O-RING 44.4 X 3.1 G45
582	PSB1046PF0582	THRUST BEARING 3047-NTB/AS2
583	PSB1046PF0583	GEARED PINION SHAFT 18T
584	PSB1046PF0584	CASTING PLUG
585	PSB1046PF0585	COLLAR
586	PCAP26M	CAP SCREW M6-1 X 12
587	PRP76M	ROLL PIN 4 X 16
588	PSB1046PF0588	BRACKET SHAFT
589	PCAP38M	CAP SCREW M5-.8 X 25
590	PSB1046PF0590	SLOTTED DOWEL PIN
591	PSB1046PF0591	CAPTIVE PIN
592	PSB1046PF0592	EXTENSION SPRING
593	PSS91M	SET SCREW M6-1 X 14
594	PLN03M	LOCK NUT M6-1
595	PSB1046PF0595	BRACKET
596	PK33M	KEY 5 X 5 X 45
597	PSB1046PF0597	WORM SHAFT
598	PSB1046PF0598	WORM GEAR
599	PSB1046PF0599	CLUTCH
600	PSB1046PF0600	CLUTCH GEAR 36T
601	PSB1046PF0601	PIVOT ARM
602	PSB1046PF0602	SPRING CUP
603	PSB1046PF0603	COMPRESSION SPRING

Apron Parts List

REF	PART #	DESCRIPTION
604	PSB1046PF0604	SPRING CUP
605	PRP04M	ROLL PIN 4 X 24
606	PSB1046PF0606	TRIP ROD
607	PSB1046PF0607	TRIP ROD SPACER
608	PSB1046PF0608	COMPRESSION SPRING
609	PSB1046PF0609	TRIP ROD OUTER SPACER
610	PLN09M	LOCK NUT M12-1.75
611	PSB1046PF0611	THRUST BEARING NTB1528/AS2
612	PSB1046PF0612	FLANGED BEARING
613	PSB1046PF0613	COMPRESSION PLATE
614	PSB1046PF0614	DOWEL PIN
615	PRP05M	ROLL PIN 5 X 30
616	PSB1046PF0616	WORM SHAFT FLAT WASHER 10MM
617	PLN05M	LOCK NUT M10-1.5
618	PSB1046PF0618	DOMED NUT
619	PRP04M	ROLL PIN 4 X 24

REF	PART #	DESCRIPTION
620	PRP02M	ROLL PIN 3 X 16
621	PSB1046PF0621	THREADED SHAFT
622	PSB1046PF0622	COMPRESSION PLATE FLAT WASHER
623	PRP105M	ROLL PIN 3 X 24
624	PSB1046PF0624	COUPLER
625	PSB1046PF0625	STEPPED SHAFT
626	P0RP018	O-RING 17.8 X 2.4 P18
627	PSB1046PF0627	SHAFT END CAP
628	PFH74M	FLAT HD CAP SCR M5-.8 X 16
629	PRP10M	ROLL PIN 5 X 36
630	PSB1046PF0630	KNURLED KNOB
631	PSB1046PF0631	PLUNGER
632	PSB1046PF0632	COMPRESSION SPRING
633	PSS15M	SET SCREW M12-1.75 X 12
634	PSB1046PF0634	SHAFT SLEEVE

End Gears

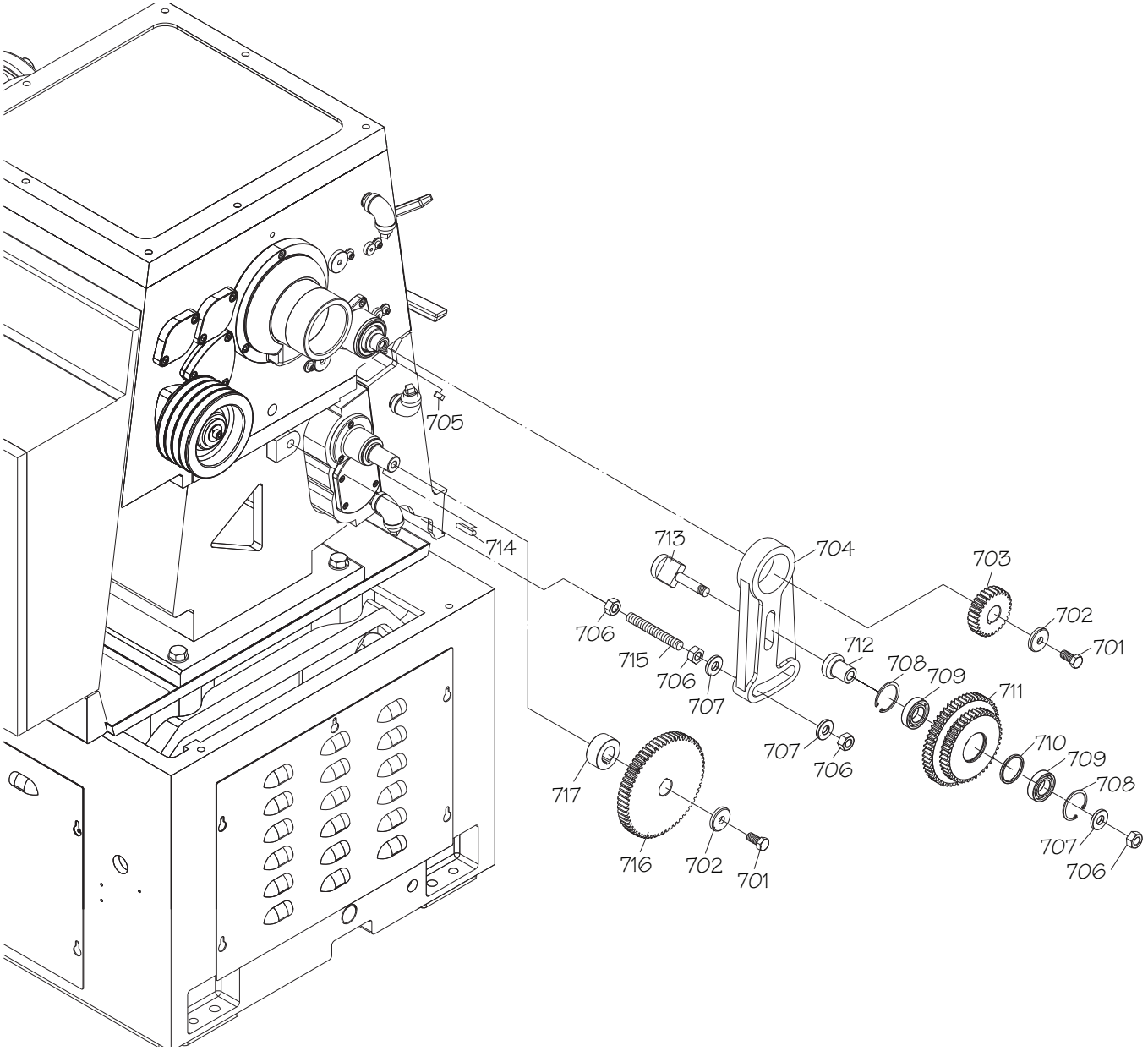

REF	PART #	DESCRIPTION
701	PB25M	HEX BOLT M12-1.75 X 25
702	PSB1046PF0702	GEAR FLAT WASHER
703	PSB1046PF0703	GEAR 24T (SB1046PF-48PF)
703	PSB1056F0703	GEAR 24T (SB1056F-58F)
704	PSB1046PF0704	PIVOT ARM (SB1046PF-48PF)
704	PSB1056F0704	PIVOT ARM (SB1056F-58F)
705	PK166M	KEY 7 X 7 X 15
706	PN32M	HEX NUT M14-2
707	PSB1046PF0707	GEAR FLAT WASHER
708	PR25M	INT RETAINING RING 47MM
709	P6005ZZ	BALL BEARING 6005ZZ

REF	PART #	DESCRIPTION
710	PSB1046PF0710	SPACER
711	PSB1046PF0711	GEAR 44T/56T (SB1046PF-48PF)
711	PSB1056F0711	GEAR 44T/56T (SB1056F-58F)
712	PSB1046PF0712	SHAFT SLEEVE
713	PSB1046PF0713	T-HEAD SHAFT
714	PK109M	KEY 7 X 7 X 35
715	PSB1046PF0715	STUD-FT M14-2 X 110
716	PSB1046PF0716	GEAR 57T (SB1046PF-48PF)
716	PSB1056F0716	GEAR 57T (SB1056F-58F)
717	PSB1046PF0717	GEAR SPACER

Motor & Headstock Oil System

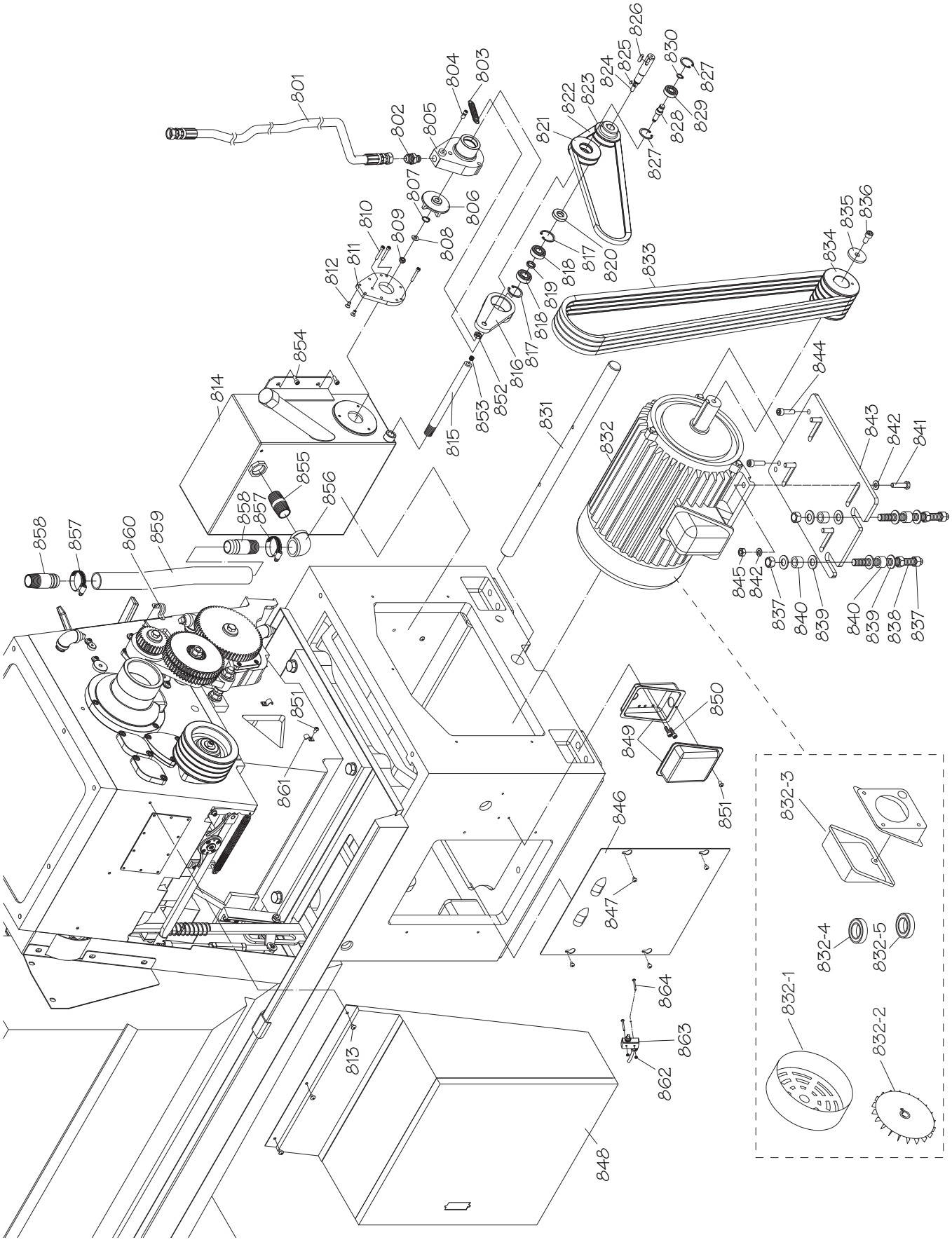

Motor & Headstock Oil System Parts List

REF	PART #	DESCRIPTION
801	PSB1046PF0801	OIL HOSE 5/8"
802	PSB1046PF0802	OIL HOSE FITTING 5/8" NPT
803	PSB1046PF0803	EXTENSION SPRING
804	PSB1046PF0804	RETAINING SCREW
805	PSB1046PF0805	PUMP HOUSING
806	PSB1046PF0806	PUMP IMPELLER
807	PR05M	EXT RETAINING RING 15MM
808	PW01M	FLAT WASHER 8MM
809	PN03M	HEX NUT M8-1.25
810	PCAP79M	CAP SCREW M5-.8 X 35
811	PSB1046PF0811	OIL PUMP BACK PLATE
812	PFH02M	FLAT HD SCR M6-1 X 12
813	PBHS38M	BUTTON HD CAP SCR M5-.8 X 8
814	PSB1046PF0814	OIL TANK
815	PSB1046PF0815	OIL TANK DRAIN PIPE
816	PSB1046PF0816	IDLER ARM
817	PR21M	INT RETAINING RING 35MM
818	P6202ZZ	BALL BEARING 6202ZZ
819	PSB1046PF0819	SPACER
820	PSB1046PF0820	OIL SEAL 18 X 37 X 5MM
821	PSB1046PF0821	IDLER PULLEY
822	PVA38	V-BELT A38
823	PSB1046PF0823	PUMP PULLEY
824	PSB1046PF0824	PUMP INPUT SHAFT
825	PK29M	KEY 4 X 4 X 8
826	PK07M	KEY 6 X 6 X 20
827	PR29M	INT RETAINING RING 32MM
828	PSB1046PF0828	IDLER PULLEY SHAFT
829	P6201ZZ	BALL BEARING 6201ZZ
830	PR03M	EXT RETAINING RING 12MM
831	PSB1046PF0831	MOTOR MOUNT SHAFT 32 X 625MM
832	PSB1046PF0832	MOTOR 15HP 440V 3PH 60HZ
832-1	PSB1046PF0832-1	MOTOR FAN COVER
832-2	PSB1046PF0832-2	MOTOR FAN
832-3	PSB1046PF0832-3	MOTOR JUNCTION BOX
832-4	PSB1046PF0832-4	FRONT MOTOR BEARING
832-5	PSB1046PF0832-5	REAR MOTOR BEARING
833	PVA79	V-BELT A79 (SB1046PF-48PF)
833	PVA75	V-BELT A75 (SB1056F-58F)
834	PSB1046PF0834	MOTOR PULLEY
835	PSB1046PF0835	PULLEY FLAT WASHER 12 X 45 X 5
836	PCAP64M	CAP SCREW M10-1.5 X 25
837	PN13M	HEX NUT M16-2
838	PSB1046PF0838	THREADED ROD M16-2
839	PSB1046PF0839	FLAT WASHER 16.5 X 40
840	PSB1046PF0840	RUBBER SPACER
841	PB31M	HEX BOLT M10-1.5 X 40
842	PW04M	FLAT WASHER 10MM
843	PSB1046PF0843	MOTOR MOUNT PLATE
844	PCAP64M	CAP SCREW M10-1.5 X 25
845	PN02M	HEX NUT M10-1.5
846	PSB1046PF0846	REAR MOTOR ACCESS PLATE
847	PBHS09M	BUTTON HD CAP SCR M6-1 X 12
848	PSB1046PF0848	ELECTRICAL BOX ASSEMBLY
849	PSB1046PF0849	JUNCTION BOX
850	PCAP06M	CAP SCREW M6-1 X 25
851	PBHS38M	BUTTON HD CAP SCR M5-.8 X 8
852	PN02M	HEX NUT M10-1.5
853	PSB1046PF0853	PLUG 1/4" NPT
854	PCAP11M	CAP SCREW M8-1.25 X 16
855	PSB1046PF0855	HOSE COUPLER 1" NPT
856	PSB1046PF0856	ELBOW 1" NPT
857	PSB1046PF0857	HOSE CLAMP 3/4"
858	PSB1046PF0858	HOSE CONNECTOR 1" X 75MM
859	PSB1046PF0859	OIL RETURN HOSE
860	PSB1046PF0860	HOSE CLIP
861	PSB1046PF0861	HOSE CLIP
862	PN04M	HEX NUT M4-.7
863	PSB1042PF1160	END COVER SAFETY SWITCH TM1307
864	PS65M	PHLP HD SCR M4-.7 X 40

Saddle 1

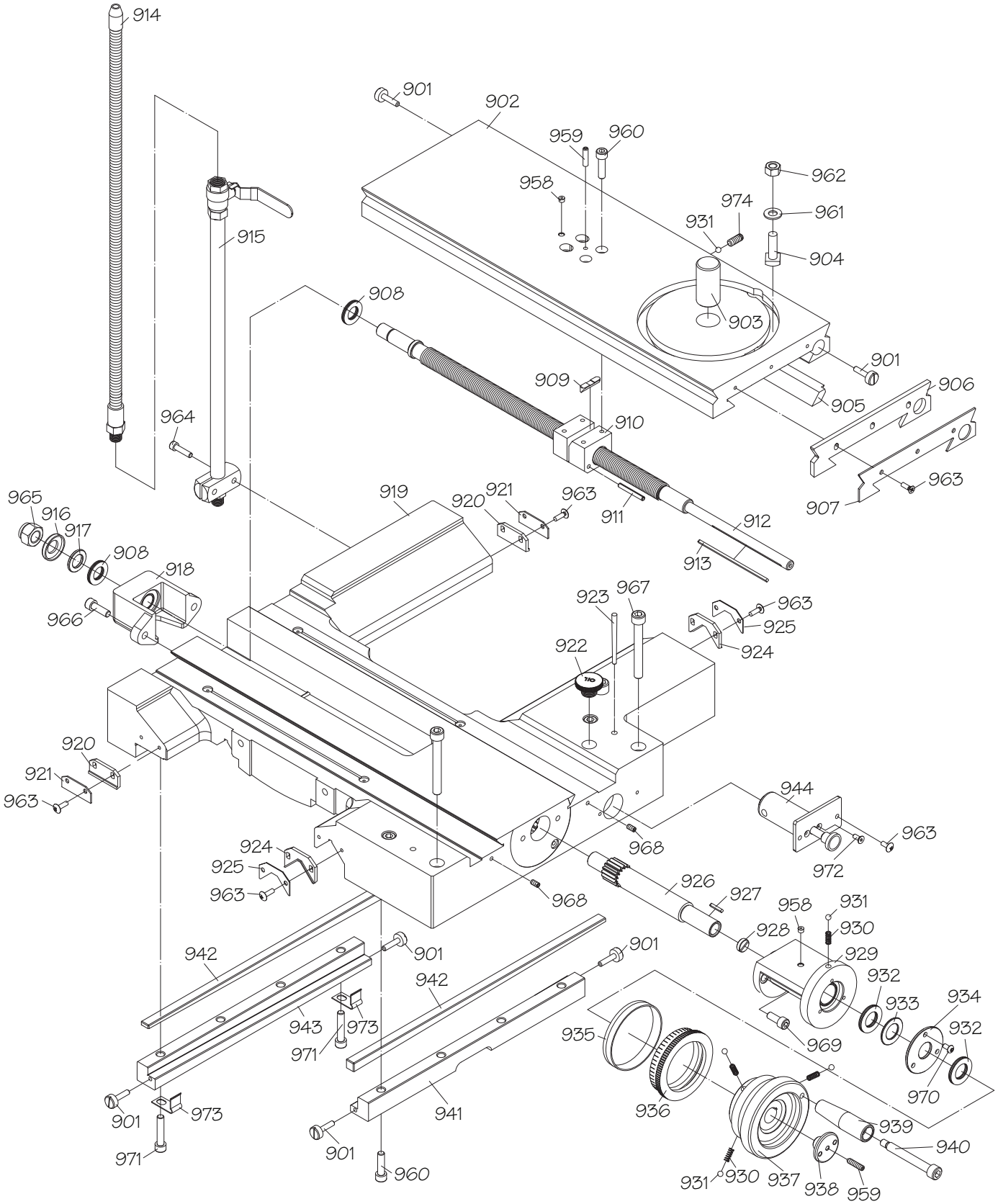
914
901
902
959
960
958
962
974
961
931
904
915
908
903
901
909
906
905
964
910
963
907
965
916
917
919
920
921
963
911
912
908
918
913
966
923
967
963
925
922
924
920
921
963
944
963
924
925
963
968
972
926
927
958
931
930
928
929
942
901
901
942
932
933
934
943
973
971
935
969
932
970
936
901
973
941
939
940
971
901
960
931
930
937
938
959

Saddle 2

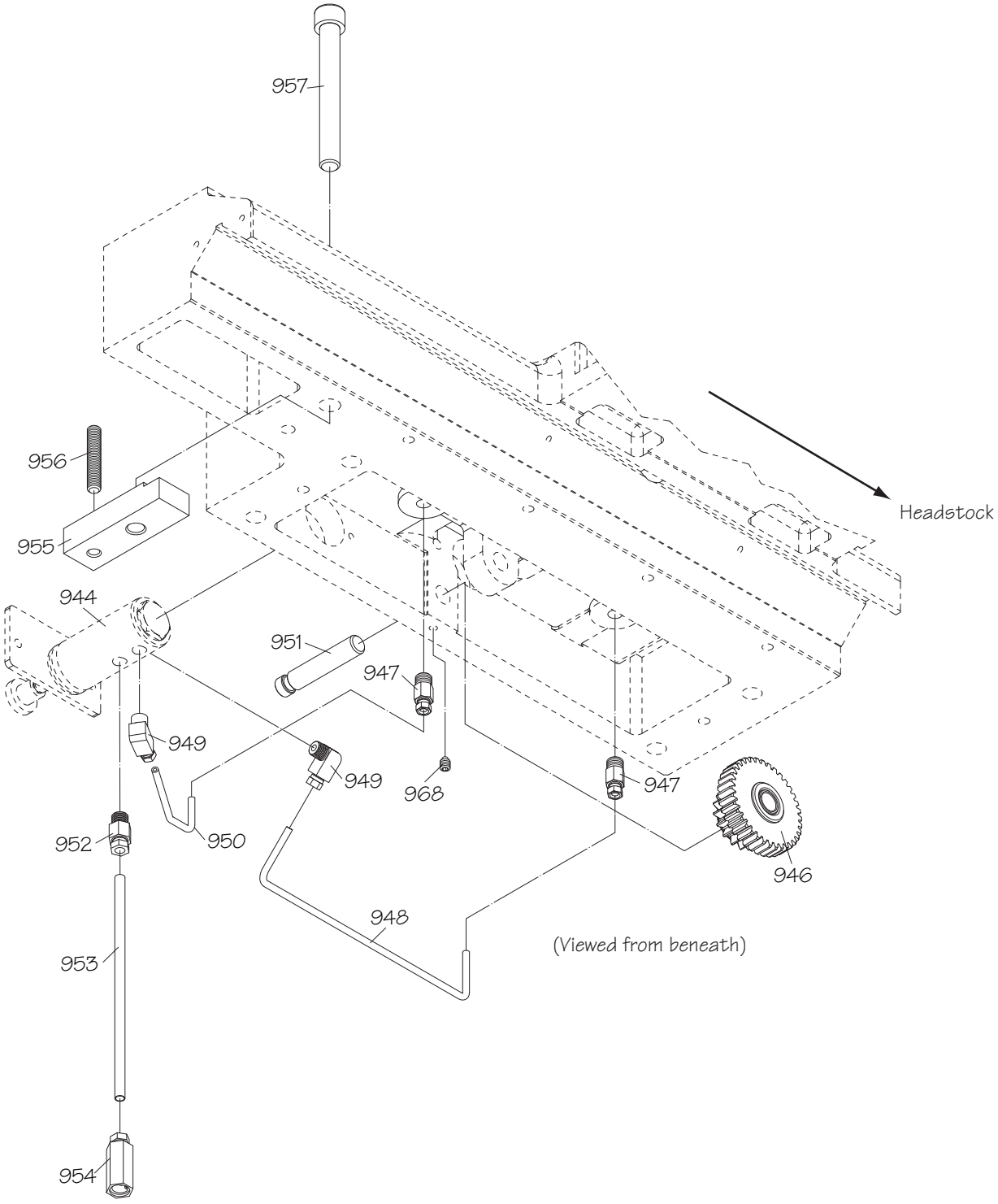
957
956
955
944
951
947
949
949
968
947
952
950
946
948
953
954
Headstock
(Viewed from beneath)

Saddle Parts List

REF	PART #	DESCRIPTION
901	PSB1046PF0901	GIB ADJUST SCREW
902	PSB1046PF0902	CROSS SLIDE
903	PSB1046PF0903	COMPOUND REST PIVOT 25 X 40
904	PSB1046PF0904	COMPOUND REST T-BOLT
905	PSB1046PF0905	CROSS SLIDE GIB
906	PSB1046PF0906	CROSS SLIDE WAY WIPER
907	PSB1046PF0907	CROSS SLIDE WAY WIPER PLATE
908	PSB1046PF0908	THRUST BEARING NTB/AS2 1730
909	PSB1046PF0909	WEDGE 7 X 7 X 30
910	PSB1046PF0910	LEADSCREW HALF NUT
911	PRP28M	ROLL PIN 5 X 40
912	PSB1046PF0912	CROSS SLIDE LEADSCREW
913	PK179M	KEY 3 X 3 X 115
914	PSB1046PF0914	COOLANT NOZZLE 3/8 PT X 24"
915	PSB1046PF0915	COOLANT STAND PIPE ASSY 3/8 PT
916	PSB1046PF0916	BEARING COVER
917	PSB1046PF0917	SPACER
918	PSB1046PF0918	LEADSCREW BRACKET
919	PSB1046PF0919	SADDLE CASTING
920	PSB1046PF0920	SADDLE STRAIGHT WAY WIPER
921	PSB1046PF0921	SADDLE STRAIGHT WAY WIPER PLATE
922	PSB1046PF0922	OIL FILL CAP
923	PSB1046PF0923	TAPER PIN #6 X 2-1/2"
924	PSB1046PF0924	SADDLE V-WAY WIPER
925	PSB1046PF0925	SADDLE V-WAY WIPER PLATE
926	PSB1046PF0926	CROSS SLIDE PINION SHAFT 16T
927	PK96M	KEY 3 X 3 X 20
928	PSB1046PF0928	SHAFT CAP M16-2 X 5
929	PSB1046PF0929	PINION SHAFT BRACKET
930	PSB1046PF0930	COMPRESSION SPRING
931	PSTB001	STEEL BALL 1/4
932	PSB1046PF0932	THRUST BEARING NTB/AS2 2035
933	PSB1046PF0933	SPACER
934	PSB1046PF0934	PINION SHAFT END CAP
935	PSB1046PF0935	GRADUATED DIAL BASE RING
936	PSB1046PF0936	GRADUATED DIAL
937	PSB1046PF0937	HANDWHEEL
938	PSB1046PF0938	HANDWHEEL END CAP
939	PSB1046PF0939	HANDWHEEL HANDLE
940	PSB1046PF0940	HANDLE CAP SCREW
941	PSB1046PF0941	FRONT SADDLE GIB SUPPORT
942	PSB1046PF0942	SADDLE GIB
943	PSB1046PF0943	REAR SADDLE GIB SUPPORT
944	PSB1046PF0944	ONE-SHOT OILER ASSEMBLY
946	PSB1046PF0946	GEAR 16T/36T
947	PSB1046PF0947	COUPLER 1/8"-4MM
948	PSB1046PF0948	ALUMINUM OIL TUBE 4 X 258MM
949	PSB1046PF0949	ELBOW COUPLER 1/8"-4MM
950	PSB1046PF0950	ALUMINUM OIL TUBE 4 X 121MM
951	PSB1046PF0951	CAPTIVE PIN
952	PSB1046PF0952	COUPLER 1/8"-6MM
953	PSB1046PF0953	ALUMINUM OIL TUBE 6 X 175MM
954	PSB1046PF0954	OIL FILTER 6MM
955	PSB1046PF0955	CLAMP PLATE
956	PSS44M	SET SCREW M8-1.25 X 40
957	PCAP187M	CAP SCREW M12-1.75 X 85
958	PLUBE001	TAP-IN BALL OILER 1/4
959	PSS12M	SET SCREW M6-1 X 25
960	PCAP13M	CAP SCREW M8-1.25 X 30
961	PW04M	FLAT WASHER 10MM
962	PN02M	HEX NUT M10-1.5
963	PBHS06M	BUTTON HD CAP SCR M5-.8 X 12
964	PCAP06M	CAP SCREW M6-1 X 25
965	PSB1046PF0965	NUT M16
966	PCAP38M	CAP SCREW M5-.8 X 25
967	PSB1046PF0967	CAP SCREW M10-1.25 X 80
968	PSS03M	SET SCREW M6-1 X 8
969	PCAP14M	CAP SCREW M8-1.25 X 20
970	PSBHS35M	BUTTON HD CAP SCR M5-.8 X 10
971	PCAP12M	CAP SCREW M8-1.25 X 40
972	PFH05M	FLAT HD SCR M5-.8 X 12
973	PSB1046PF0973	GIB RETAINING CLIP
974	PSS09M	SET SCREW M8-1.25 X 20

Tool Post & Compound Rest

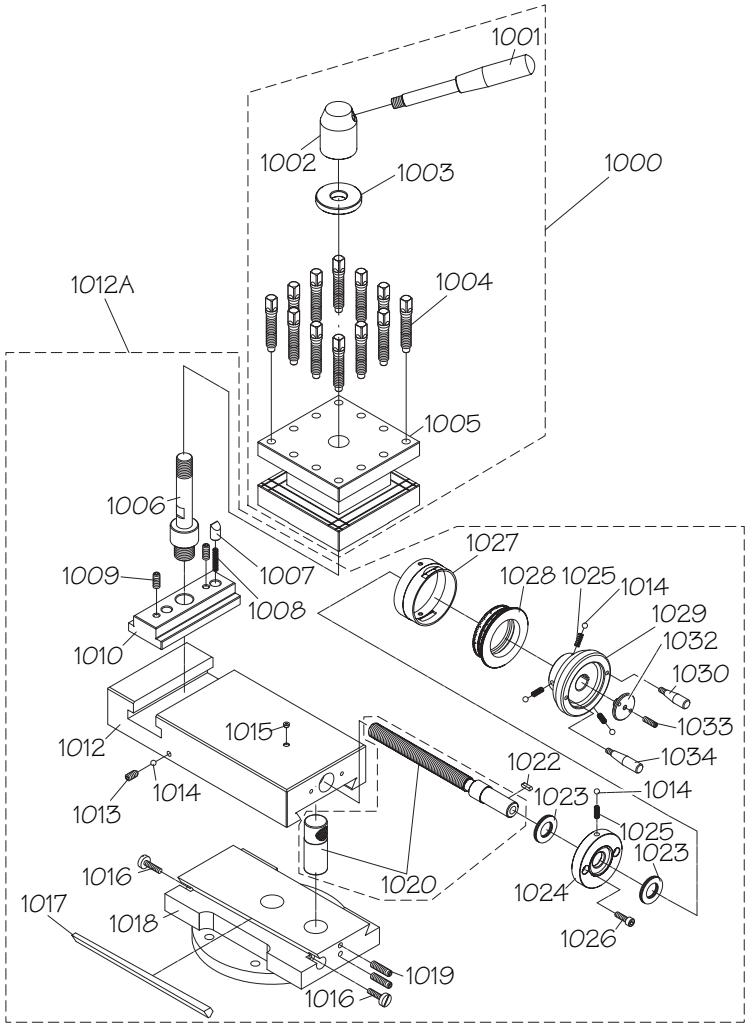

REF	PART #	DESCRIPTION
1000	PSB1046PF1000	4-WAY TOOL POST ASSEMBLY
1001	PSB1046PF1001	TOOL POST LEVER
1002	PSB1046PF1002	TOOL POST LEVER HUB
1003	PSB1046PF1003	HUB THRUST WASHER
1004	PSB1046PF1004	TOOL POST BOLT
1005	PSB1046PF1005	POST BODY
1006	PSB1046PF1006	POST SHAFT
1007	PSB1046PF1007	TOOL POST PLUNGER
1008	PSB1046PF1008	COMPRESSION SPRING
1009	PSS09M	SET SCREW M8-1.25 X 20
1010	PSB1046PF1010	TOOL POST T-SLIDER
1012A	PSB1046PF1012A	COMPOUND REST ASSEMBLY (SB1046PF-48PF)
1012A	PSB1056F1012A	COMPOUND REST ASSEMBLY (SB1056F-58F)
1012	PSB1046PF1012	COMPOUND REST (SB1046PF-48PF)
1012	PSB1056F1012	COMPOUND REST (SB1056F-58F)
1013	PSS06M	SET SCREW M8-1.25 X 16
1014	PSTB001	STEEL BALL 1/4
1015	PLUBE001	TAP-IN BALL OILER 1/4

REF	PART #	DESCRIPTION
1016	PSB1046PF1016	GIB ADJUSTMENT SCREW
1017	PSB1046PF1017	COMPOUND REST GIB
1018	PSB1046PF1018	COMPOUND REST BASE (SB1046PF-48PF)
1018	PSB1056F1018	COMPOUND REST BASE (SB1056F-58F)
1019	PSS19M	SET SCREW M8-1.25 X 30
1020	PSB1046PF1020	COMPOUND REST LEADSCREW W/NUT
1022	PK47M	KEY 4 X 4 X 15
1023	PSB1046PF1023	THRUST BEARING NTB/AS2 2035
1024	PSB1046PF1024	LEADSCREW BRACKET
1025	PSB1046PF1025	COMPRESSION SPRING
1026	PCAP02M	CAP SCREW M6-1 X 20
1027	PSB1046PF1027	GRADUATED DIAL BASE
1028	PSB1046PF1028	GRADUATED DIAL
1029	PSB1046PF1029	HANDWHEEL
1030	PSB1046PF1030	HANDWHEEL HANDLE
1032	PSB1046PF1032	HANDWHEEL END CAP
1033	PSS25M	SET SCREW M6-1 X 20
1034	PSB1046PF1034	HANDWHEEL HANDLE

Bed & Shafts

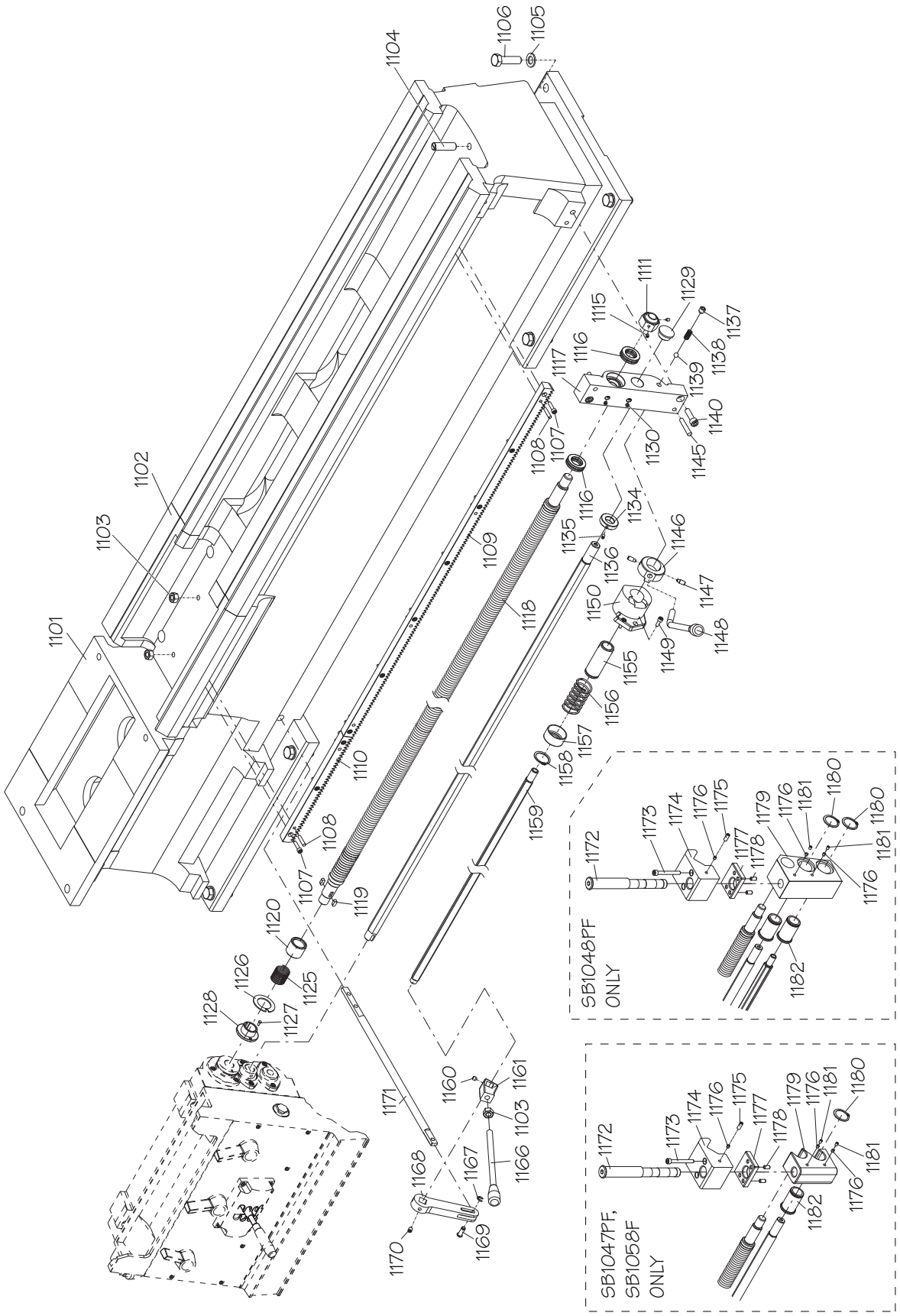
1101
1102
1103
1104
1105
1106
1107
1108
1109
1110
1111
1115
1116
1117
1118
1119
1120
1125
1126
1127
1128
1129
1130
1134
1135
1136
1137
1138
1139
1140
1145
1146
1147
1148
1149
1150
1155
1156
1157
1158
1159
1160
1161
1166
1167
1168
1169
1170
1171
1172
1173
1174
1175
1176
1177
1178
1179
1180
1181
1182
SB1048PF ONLY
SB1047PF, SB1058F ONLY

Bed & Shafts Parts List

REF	PART #	DESCRIPTION
1101	PSB1056F1101	LATHE BED 40" (SB1056F)
1101	PSB1046PF1101	LATHE BED 60" (SB1046PF, -57F)
1101	PSB1047PF1101	LATHE BED 80" (SB1047PF, -58F)
1101	PSB1048PF1101	LATHE BED 120" (SB1048PF)
1102	PSB1056F1102	LATHE BED GAP (SB1056F)
1102	PSB1046PF1102	LATHE BED GAP (SB1046PF, -57F)
1102	PSB1047PF1102	LATHE BED GAP (SB1047PF, -58F)
1102	PSB1048PF1102	LATHE BED GAP (SB1048PF)
1103	PN09M	HEX NUT M12-1.75
1104	PSB1046PF1104	BED STOP BOLT
1105	PW08M	FLAT WASHER 16MM
1106	PB80M	HEX BOLT M16-2 X 55
1107	PCAP06M	CAP SCREW M6-1 X 25
1108	PRP08M	ROLL PIN 6 X 30
1109	PSB1056F1109	BED RACK (SB1056F)
1109	PSB1046PF1109	BED RACK (SB1046PF, -57F)
1109	PSB1047PF1109	BED RACK (SB1047PF, -58F)
1109	PSB1048PF1109	BED RACK (SB1048PF)
1110	PSB1056F1110	GAP RACK (SB1056F)
1110	PSB1046PF1110	GAP RACK (SB1046PF, -57F)
1110	PSB1047PF1110	GAP RACK (SB1047PF, -58F)
1110	PSB1048PF1110	GAP RACK (SB1048PF)
1111	PSB1046PF1111	LEADSCREW LOCK NUT
1115	PSS03M	SET SCREW M6-1 X 8
1116	P51105	THRUST BEARING 51105
1117	PSB1046PF1117	SHAFT END BRACKET
1118	PSB1056F1118	LEADSCREW (SB1056F)
1118	PSB1046PF1118	LEADSCREW (SB1046PF, -57F)
1118	PSB1047PF1118	LEADSCREW (SB1047PF, -58F)
1118	PSB1048PF1118	LEADSCREW (SB1048PF)
1119	PK99M	KEY 6 X 6 X 15
1120	PSB1046PF1120	LEADSCREW SPRING HOUSING
1125	PSB1046PF1125	LEADSCREW SPRING
1126	PSB1046PF1126	KEYED LEADSCREW FLAT WASHER
1127	PSB101609327	SHEAR PIN
1128	PSB1046PF1128	LEADSCREW FLANGE BUSHING
1129	PSB1046PF1129	FEED ROD END CAP
1130	PLUBE001	TAP-IN BALL OILER 1/4
1134	PSB1046PF1134	LOCK COLLAR
1135	PSS01M	SET SCREW M6-1 X 10
1136	PSB1056F1136	FEED ROD (SB1056F)
1136	PSB1046PF1136	FEED ROD (SB1046PF, -57F)
1136	PSB1047PF1136	FEED ROD (SB1047PF, -58F)
1136	PSB1048PF1136	FEED ROD (SB1048PF)
1137	PSS15M	SET SCREW M12-1.75 X 12
1138	PSB1046PF1138	COMPRESSION SPRING
1139	PSTB003	STEEL BALL 3/8"
1140	PCAP84M	CAP SCREW M10-1.5 X 35
1145	PSB1046PF1145	TAPER PIN 7 X 50
1146	PSB1046PF1146	SPINDLE ON/OFF LEVER HUB
1147	PSB1046PF1147	STEP PIN
1148	PSB1046PF1148	SPINDLE ON/OFF LEVER
1149	PCAP01M	CAP SCREW M6-1 X 16
1150	PSB1046PF1150	SPINLE LEVER SELECTOR BRACKET
1155	PSB1046PF1155	SPINDLE ROD SLEEVE
1156	PSB1046PF1156	SPINDLE ROD COMPRESSION SPRING
1157	PSB1046PF1157	SPINDLE ROD SPRING COVER
1158	PR37M	EXT RETAINING RING 32MM
1159	PSB1056F1159	SPINDLE ROD (SB1056F)
1159	PSB1046PF1159	SPINDLE ROD (SB1046PF, -57F)
1159	PSB1047PF1159	SPINDLE ROD (SB1047PF, -58F)
1159	PSB1048PF1159	SPINDLE ROD (SB1048PF)
1160	PSS20M	SET SCREW M8-1.25 X 8
1161	PSB1046PF1161	SPINDLE ROD LEVER HUB
1166	PSB1046PF1166	SPINDLE ROD LEVER
1167	PEC015M	E-CLIP 8MM
1168	PSB1046PF1168	SPINDLE SWITCH PIVOT ARM
1169	PSB1046PF1169	SPINDLE SWITCH PIVOT PIN
1170	PSS14M	SET SCREW M8-1.25 X 12
1171	PSB1046PF1171	SPINDLE SWITCH LINKAGE
1172	PSB1047PF1172	STEP SHAFT (SB1047PF, -58F)
1172	PSB1048PF1172	STEP SHAFT (SB1048PF)
1173	PCAP128M	CAP SCREW M8-1.25 X 70
1174	PSB1047PF1174	BED CLAMP (SB1047PF, -58F)
1174	PSB1048PF1174	BED CLAMP (SB1048PF)
1175	PSS09M	SET SCREW M8-1.25 X 20
1176	PSB1047PF1176	PLUNGER
1177	PSB1047PF1177	LOWER CLAMP PLATE
1178	PSS06M	SET SCREW M8-1.25 X 16
1179	PSB1047PF1179	SHAFT SUPPORT (SB1047PF, -58F)
1179	PSB1048PF1179	SHAFT SUPPORT (SB1048PF)
1180	PR12M	EXT RETAINING RING 35MM
1181	PSS20M	SET SCREW M8-1.25 X 8
1182	PSB1047PF1182	BUSHING

Stands & Panels (SB1046PF-47PF, SB1056F-58F)

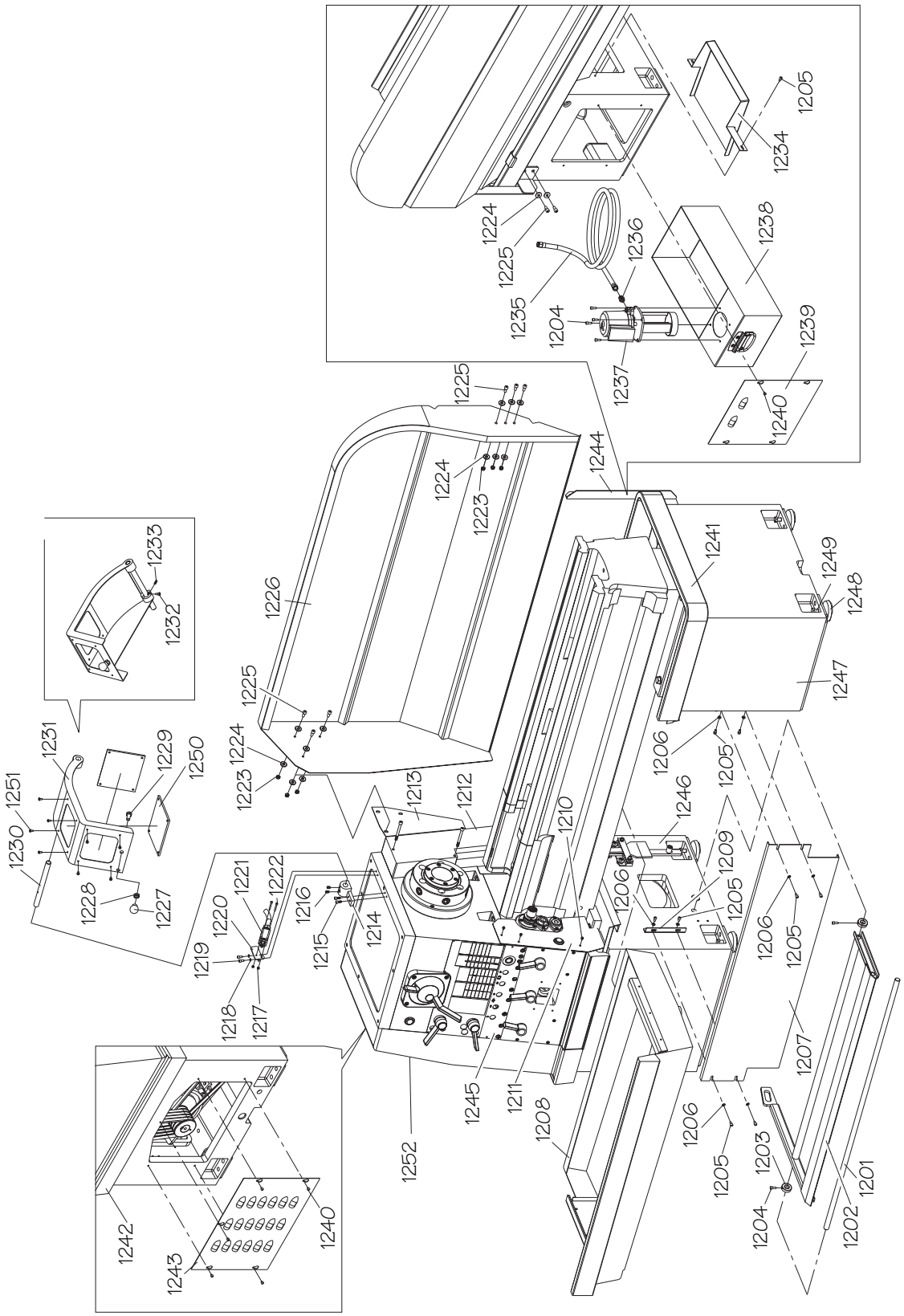

Stand & Panels Parts List (SB1046PF-47PF, SB1056F-58F)

REF	PART #	DESCRIPTION
1201	PSB1056F1201	BRAKE PEDAL SHAFT (SB1056F)
1201	PSB1046PF1201	BRAKE PEDAL SHAFT (SB1046PF, -57F)
1201	PSB1047PF1201	BRAKE PEDAL SHAFT (SB1047PF, -58F)
1202	PSB1056F1202	BRAKE PEDAL (SB1056F)
1202	PSB1046PF1202	BRAKE PEDAL (SB1046PF, -57F)
1202	PSB1047PF1202	BRAKE PEDAL (SB1047PF, -58F)
1203	PSB1046PF1203	PEDAL SHAFT LOCK COLLAR
1204	PCAP01M	CAP SCREW M6-1 X 16
1205	PCAP04M	CAP SCREW M6-1 X 10
1206	PW03M	FLAT WASHER 6MM
1207	PSB1056F1207	CENTER PANEL (SB1056F)
1207	PSB1046PF1207	CENTER PANEL (SB1046PF, -57F)
1207	PSB1047PF1207	CENTER PANEL (SB1047PF, -58F)
1208	PSB1056F1208	CHIP DRAWER (SB1056F)
1208	PSB1046PF1208	CHIP DRAWER (SB1046PF, -57F)
1208	PSB1047PF1208	CHIP DRAWER (SB1047PF, -58F)
1209	PSB1046PF1209	CENTER PANEL BRACKET
1210	PBHS38M	BUTTON HD CAP SCR M5-.8 X 8
1211	PSB1046PF1211	SHAFT CLUTCH COVER (SB1046PF-47PF)
1211	PSB1056F1211	SHAFT CLUTCH COVER (SB1056F-58F)
1212	PSB1046PF1212	BRAKE LINKAGE GUARD
1213	PSB1046PF1213	BACKSPLASH MOUNT (SB1046PF-47PF)
1213	PSB1056F1213	BACKSPLASH MOUNT (SB1056F-58F)
1214	PSB1046PF1214	CHUCK GUARD PIVOT BRACKET
1215	PB56M	CAP SCREW M10-1.5 X 20
1216	PSS14M	SET SCREW M8-1.25 X 12
1217	PN04M	HEX NUT M4-.7
1218	PLW03M	LOCK WASHER 6MM
1219	PCAP26M	CAP SCREW M6-1 X 12
1220	PSB1046PF1220	SAFETY SWITCH BRACKET
1221	PSB1046PF1221	CHUCK GUARD SAFETY SWITCH TZ9212
1222	PBHCS38M	BUTTON HD CAP SCR M4-.7 X 40
1223	PN03M	HEX NUT M8-1.25
1224	PW01M	FLAT WASHER 8MM
1225	PCAP14M	CAP SCREW M8-1.25 X 20

REF	PART #	DESCRIPTION
1226	PSB1056F1226	BACKSPLASH (SB1056F)
1226	PSB1046PF1226	BACKSPLASH (SB1046PF, -57F)
1226	PSB1047PF1226	BACKSPLASH (SB1047PF, -58F)
1227	PSB1046PF1227	CHUCK GUARD KNOB 1/2-13
1228	PN06	HEX NUT 1/2-13
1229	PB52	HEX BOLT 1/2-13 X 1
1230	PSB1046PF1230	CHUCK GUARD PIVOT ROD
1231	PSB1046PF1231	CHUCK SAFETY GUARD
1232	PCAP26M	CAP SCREW M6-1 X 12
1233	PSS34M	SET SCREW M5-.8 X 16
1234	PSB1046PF1234	COOLANT CHUTE
1235	PSB1056F1235	HOSE 3/8 X 72" (SB1056F)
1235	PSB1046PF1235	HOSE 3/8 X 78" (SB1046PF, -57F)
1235	PSB1047PF1235	HOSE 3/8 X 96" (SB1047PF, -58F)
1236	PSB1046PF1236	PIPE NIPPLE 3/8 PT X 3/8 PH
1237	PSB1046PF1237	COOLANT PUMP ASSEMBLY
1238	PSB1046PF1238	COOLANT TANK (SB1046PF-48PF)
1238	PSB1056F1238	COOLANT TANK (SB1056F-58F)
1239	PSB1046PF1239	COOLANT TANK COVER
1240	PBHS11M	BUTTON HD CAP SCREW M6-1 X 10
1241	PSB1056F1241	RIGHT SPLASH TRAY (SB1056F)
1241	PSB1046PF1241	RIGHT SPLASH TRAY (SB1046PF, -57F)
1241	PSB1047PF1241	RIGHT SPLASH TRAY (SB1047PF, -58F)
1242	PSB1046PF1242	LEFT SPLASH TRAY
1243	PSB1046PF1243	MOTOR ACCESS COVER
1244	PSB1046PF1244	BACKSPLASH MOUNTING POST
1245	PSB1046PF1245	CONTROL PANEL
1246	PSB1046PF1246	LEFT CABINET
1247	PSB1046PF1247	RIGHT CABINET
1248	PSB1046PF1248	LEVELING FOOT
1249	PB80M	HEX BOLT M16-2 X 55
1250	PSB1046PF1250	CHUCK GUARD WINDOW PLASTIC
1251	PBHS09M	BUTTON HD CAP SCR M6-1 X 12
1252	PSB1046PF1252	END GEAR COVER ASSY (SB1046PF-48PF)
1252	PSB1056F1252	END GEAR COVER ASSY (SB1056F-58F)

Brake

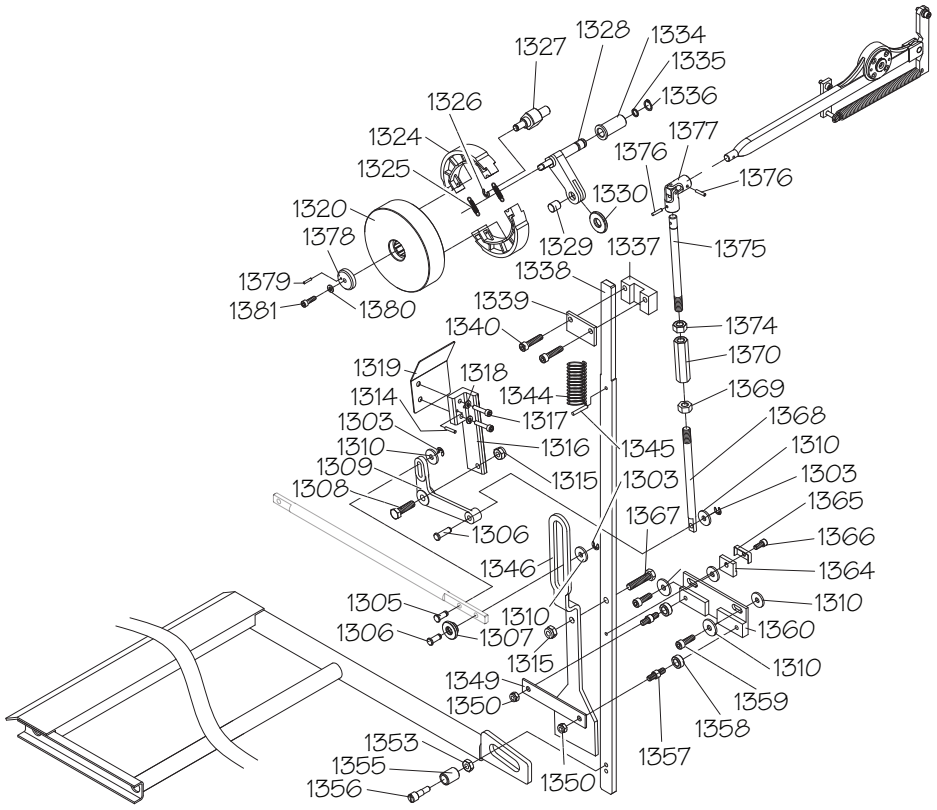

REF	PART #	DESCRIPTION
1303	PEC09M	E-CLIP 6MM
1305	PSB1046PF1305	CLEVIS PIN 6MM
1306	PSB1046PF1305	CLEVIS PIN 6MM
1307	PSB1046PF1307	SPACER
1308	PB01M	HEX BOLT M10-1.5 X 30
1309	PSB1046PF1309	ROCKER ARM
1310	PW01M	FLAT WASHER 8MM
1314	PW01M	FLAT WASHER 8MM
1315	PLN05M	LOCK NUT M10-1.5
1316	PSB1046PF1316	ROCKER ARM MOUNTING BRACKET
1317	PCAP07M	CAP SCREW M6-1 X 30
1318	PLW03M	LOCK WASHER 6MM
1319	PSB1046PF1319	SHIELD PLATE
1320	PSB1046PF1320	BRAKE DRUM
1324	PSB1046PF1324	BRAKE SHOE SET 2PC
1325	PSB1046PF1325	EXTENSION SPRING
1326	PEC015M	E-CLIP 8MM
1327	PSB1046PF1327	BRAKE SHOE ANCHOR PIN
1328	PSB1046PF1328	BRAKE ACTUATOR
1329	PSB1046PF1329	ACTUATOR PIN
1330	PSB1046PF1330	ACTUATOR ROLLER
1334	PSB1046PF1334	ACTUATOR BUSHING
1335	PORP010	O-RING 9.8 X 1.9 P10
1336	PR02M	EXT RETAINING RING 14MM
1337	PSB1046PF1337	MOUNTING BLOCK
1338	PSB1046PF1338	BRAKE ACTUATOR ROD (SB1046PF-48PF)
1338	PSB1056F1338	BRAKE ACTUATOR ROD (SB1056F-58F)
1339	PSB1046PF1339	ROD RETAINING PLATE
1340	PCAP40M	CAP SCREW M8-1.25 X 35

REF	PART #	DESCRIPTION
1344	PSB1046PF1344	EXTENSION SPRING
1345	PSB1046PF1345	SPRING ANCHOR PIN 5 X 30
1346	PSB1046PF1346	SPINDLE LEVER/BRAKE CONTROL ARM
1349	PSB1046PF1349	CONTROL ARM RETAINING PLATE
1350	PLN04M	LOCK NUT M8-1.25
1353	PN03M	HEX NUT M8-1.25
1355	PSB1046PF1355	BRAKE PEDAL PIN
1356	PSB1046PF1356	PEDAL PIN SHOULDER BOLT
1357	PSB1046PF1357	ROLLER STANDOFF
1358	PSB1046PF1358	ROLLER
1359	PCAP31M	CAP SCREW M8-1.25 X 25
1360	PSB1046PF1360	CONTROL ARM BRACKET
1364	PSB1046PF1364	STOP PLATE
1365	PSB1046PF1365	STOP PLATE SHIELD
1366	PCAP04M	CAP SCREW M6-1 X 10
1367	PB116M	HEX BOLT M10-1.5 X 45
1368	PSB1046PF1368	LOWER CLUTCH ACTUATOR ROD (SB1046PF-48PF)
1368	PSB1056F1368	LOWER CLUTCH ACTUATOR ROD (SB1056F-58F)
1369	PSB1046PF1369	ACTUATOR ROD JAM NUT M12-1.75
1370	PSB1046PF1370	ACTUATOR ROD COUPLER M12-1.75
1374	PN09M	HEX NUT M12-1.75
1375	PSB1046PF1375	UPPER CLUTCH ACTUATOR ROD (SB1046PF-48PF)
1375	PSB1056F1375	UPPER CLUTCH ACTUATOR ROD (SB1056F-58F)
1376	PRP39M	ROLL PIN 4 X 20
1377	PSB1046PF1377	UNIVERSAL JOINT ASSEMBLY
1378	PSB1046PF1378	BRAKE DRUM FLAT WASHER
1379	PRP02M	ROLL PIN 3 X 16
1380	PLW03M	LOCK WASHER 6MM
1381	PCAP02M	CAP SCREW M6-1 X 20

Tailstock

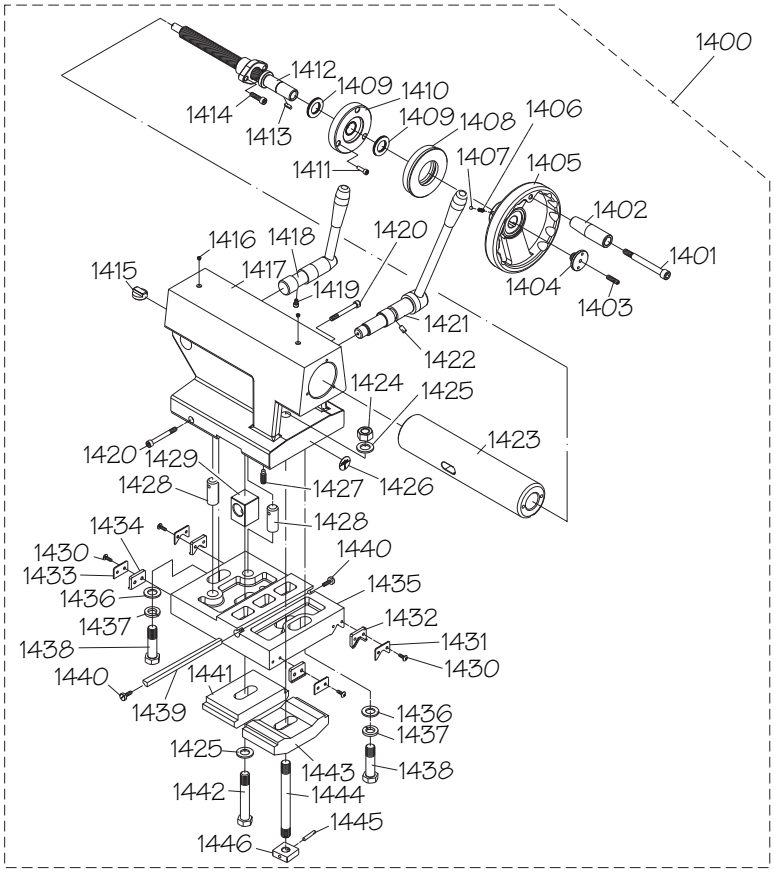

REF	PART #	DESCRIPTION
1400	PSB1046PF1400	TAILSTOCK ASSEMBLY
1401	PSB1046PF1401	HANDWHEEL HANDLE CAP SCREW
1402	PSB1046PF1402	HANDWHEEL HANDLE
1403	PSS19M	SET SCREW M8-1.25 X 30
1404	PSB1046PF1404	HANDWHEEL CENTER CAP
1405	PSB1046PF1405	HANDWHEEL
1406	PSB1046PF1406	COMPRESSION SPRING
1407	PSTB001	STEEL BALL 1/4
1408	PSB1046PF1408	GRADUATED DIAL
1409	PSB1046PF1409	THRUST BEARING 3542AS2
1410	PSB1046PF1410	GRADUATED DIAL BASE
1411	PCAP02M	CAP SCREW M6-1 X 20
1412	PSB1046PF1412	LEADSCREW W/NUT
1413	PK10M	KEY 5 X 5 X 12
1414	PCAP13M	CAP SCREW M8-1.25 X 30
1415	PSB1046PF1415	QUILL ALIGNMENT GUIDE
1416	PLUBE001	TAP-IN BALL OILER 1/4
1417	PSB1046PF1417	TAILSTOCK CASTING
1418	PSB1046PF1418	QUILL LOCK LEVER ASSEMBLY
1419	PCAP04M	CAP SCREW M6-1 X 10
1420	PCAP128M	CAP SCREW M8-1.25 X 70
1421	PSB1046PF1421	TAILSTOCK LOCK LEVER ASSEMBLY
1422	PSB1046PF1422	TAILSTOCK LOCK LEVER PIN
1423	PSB1046PF1423	QUILL

REF	PART #	DESCRIPTION
1424	PN29M	HEX NUT M18-2.5
1425	PW18M	FLAT WASHER 18MM
1426	PSB1046PF1426	OFFSET INDICATOR PLATE
1427	PSS73M	SET SCREW M10-1.5 X 30
1428	PSB1046PF1428	ALIGNMENT PIN
1429	PSB1046PF1429	PIVOT BLOCK
1430	PBHS16M	BUTTON HD CAP SCR M5-.8 X 16
1431	PSB1046PF1431	V-WAY WIPER PLATE
1432	PSB1046PF1432	V-WAY WIPER
1433	PSB1046PF1433	STRAIGHT WAY WIPER PLATE
1434	PSB1046PF1434	STRAIGHT WAY WIPER
1435	PSB1046PF1435	TAILSTOCK BASE (SB1046PF-48PF)
1435	PSB1056F1435	TAILSTOCK BASE (SB1056F-58F)
1436	PW18M	FLAT WASHER 18MM
1437	PLW12M	LOCK WASHER 18MM
1438	PSB1046PF1438	TAILSTOCK ANCHOR BOLT
1439	PSB1046PF1439	TAILSTOCK GIB
1440	PSB1046PF1440	TAILSTOCK GIB ADJUST SCREW
1441	PSB1046PF1441	CLAMP PLATE
1442	PSB1046PF1442	TAILSTOCK MOUNTING BOLT
1443	PSB1046PF1443	CLAMP BLOCK
1444	PSB1046PF1444	TAILSTOCK MOUNTING STUD
1445	PRP31M	ROLL PIN 6 X 36
1446	PSB1046PF1446	SQUARE DRILLED NUT

Thread Dial

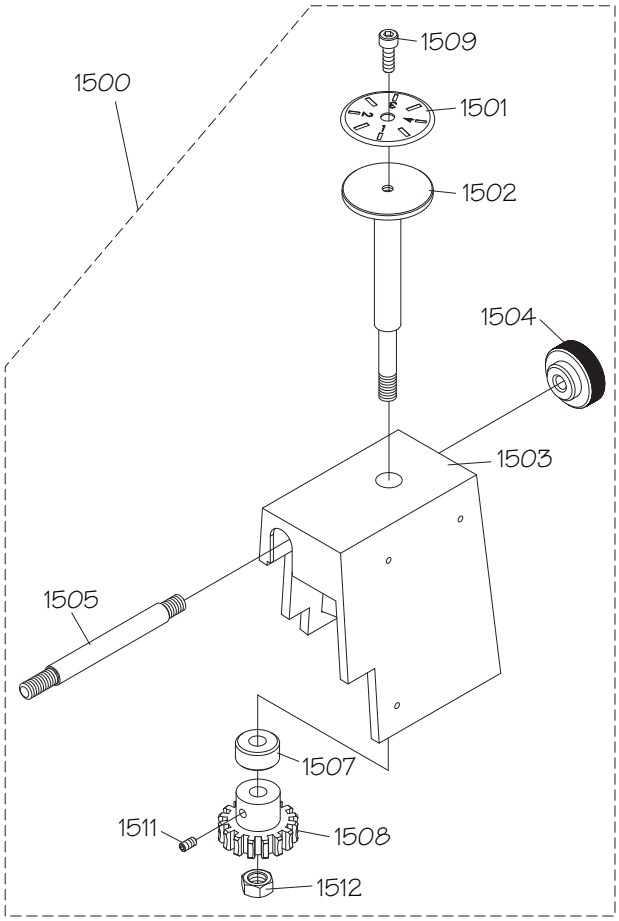

REF	PART #	DESCRIPTION
1500	PSB1046PF1500	THREAD DIAL ASSEMBLY
1501	PSB1046PF1501	DIAL PLATE
1502	PSB1046PF1502	PIVOT BOLT
1503	PSB1046PF1503	DIAL INDICATOR CASTING
1504	PSB1046PF1504	KNURLED KNOB
1505	PSB1046PF1505	PIVOT STUD-DE
1507	PSB1046PF1507	GEAR SPACER
1508	PSB1046PF1508	DIAL GEAR 16T
1509	PCAP04M	CAP SCREW M6-1 X 10
1511	PSS02M	SET SCREW M6-1 X 6
1512	PN03M	HEX NUT M8-1.25

Micrometer Stop

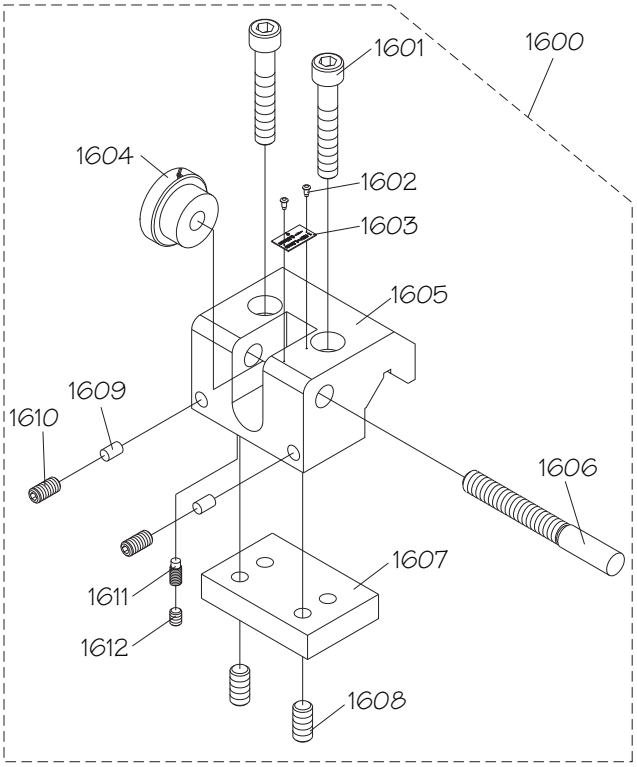

REF	PART #	DESCRIPTION
1600	PSB1046PF1600	MICROMETER STOP ASSEMBLY
1601	PCAP71M	CAP SCREW M10-1.5 X 60
1602	PRIV001M	STEEL FLUTED RIVET 2 X 5MM
1603	PSB1046PF1603	INDICATOR PLATE
1604	PSB1046PF1604	MICROMETER DIAL
1605	PSB1046PF1605	INDICATOR STOP CASTING
1606	PSB1046PF1606	INDICATOR STOP ROD
1607	PSB1046PF1607	CLAMP PLATE
1608	PSS10M	SET SCREW M10-1.5 X 20
1609	PSB1046PF1609	PLUNGER COPPER
1610	PSS06M	SET SCREW M8-1.25 X 16
1611	PSB1046PF1611	DOG POINT SET SCREW M8-1.25 X 12
1612	PSS14M	SET SCREW M8-1.25 X 12

Steady Rest

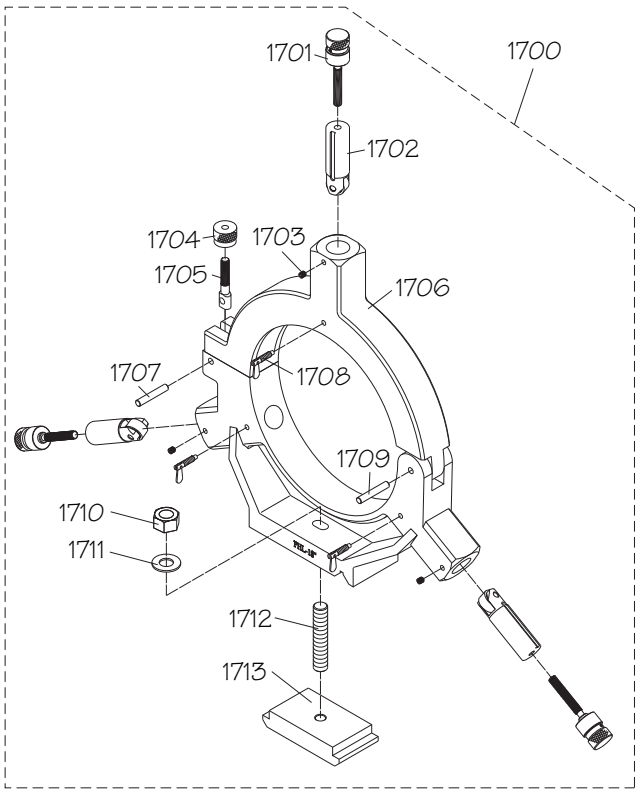

REF	PART #	DESCRIPTION
1700	PSB1046PF1700	STEADY REST ASSEMBLY (SB1046PF-48PF)
1700	PSB1056F1700	STEADY REST ASSEMBLY (SB1056F-58F)
1701	PSB1046PF1701	FINGER ADJUSTMENT KNOB ASSY
1702	PSB1046PF1702	FINGER ASSEMBLY
1703	PSS20M	SET SCREW M8-1.25 X 8
1704	PSB1046PF1704	CLAMP SCREW KNOB
1705	PSB1046PF1705	CLAMP SCREW
1706	PSB1046PF1706	CASTING 2PC (SB1046PF-48PF)
1706	PSB1056F1706	CASTING 2PC (SB1056F-58F)
1707	PSB1046PF1707	DOWEL PIN
1708	PSB1046PF1708	DOG PT LEAF SCREW M8-1.25 X 25
1709	PSB1046PF1709	HINGE PIN
1710	PSB1046PF1710	HEX NUT M18-2.25
1711	PLW12M	LOCK WASHER 18MM
1712	PSB1046PF1712	STUD-FT M18-2.25 X 75
1713	PSB1046PF1713	CLAMP PLATE

Follow Rest

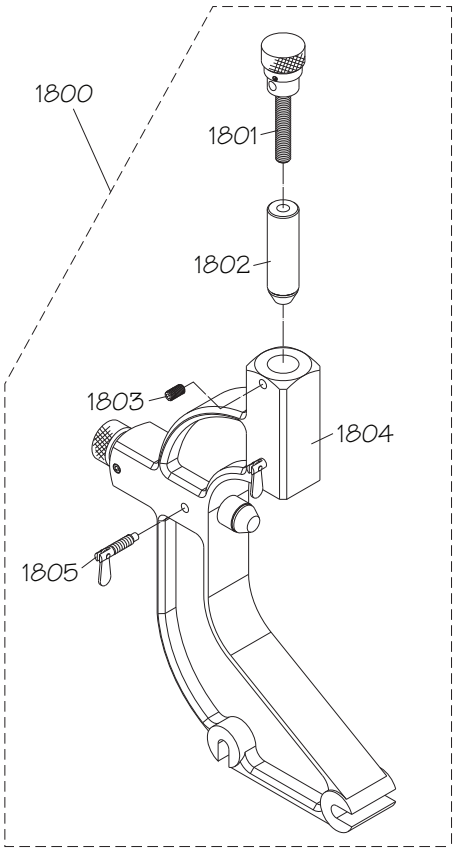

REF	PART #	DESCRIPTION
1800	PSB1046PF1800	FOLLOW REST ASSEMBLY (SB1046PF-48PF)
1800	PSB1056F1800	FOLLOW REST ASSEMBLY (SB1056F-58F)
1801	PSB1046PF1801	ADJUSTMENT KNOB ASSEMBLY
1802	PSB1046PF1802	FINGER ASSEMBLY
1803	PSS06M	SET SCREW M8-1.25 X 16
1804	PSB1046PF1804	FOLLOW REST CASTING (SB1046PF-48PF)
1804	PSB1056F1804	FOLLOW REST CASTING (SB1056F-58F)
1805	PSB1046PF1708	DOG PT LEAF SCREW M8-1.25 X 25

Electrical Cabinet & Control Panel

Electrical Cabinet

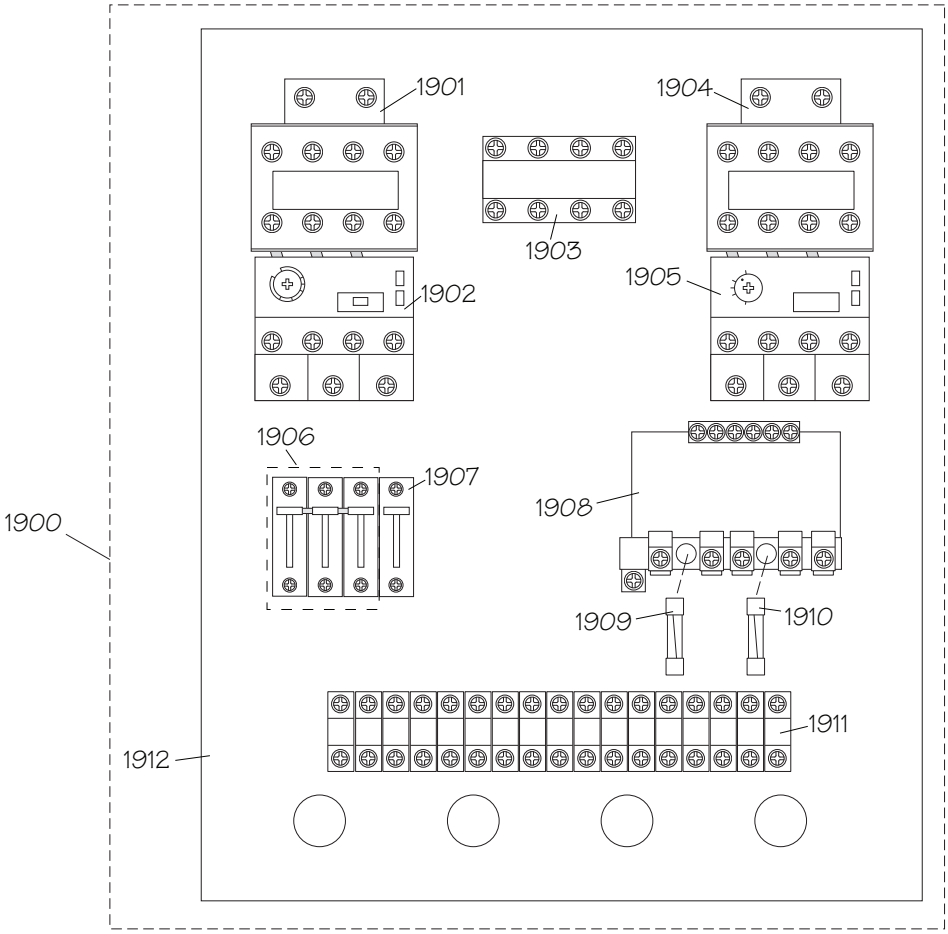

Control Panel (viewed from behind)

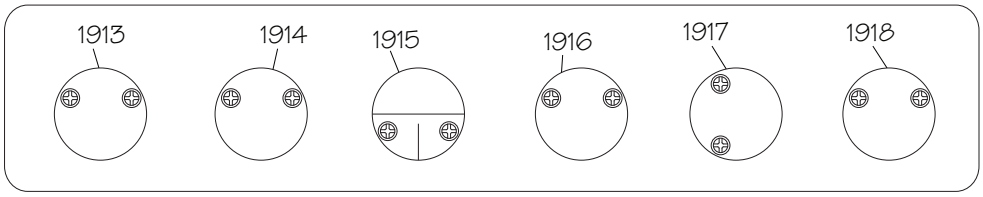

REF	PART #	DESCRIPTION
1900	PSB1046PF1900	ELECTRICAL CABINET ASSEMBLY
1901	PSB1046PF1901	CONTACTOR AB C23400
1902	PSB1046PF1902	OL RELAY AB 21-25A
1903	PSB1046PF1903	MASTER POWER SWITCH
1904	PSB1046PF1904	CONTACTOR AB C09400
1905	PSB1046PF1905	OL RELAY AB .25-.4A
1906	PSB1046PF1906	CIRCUIT BREAKER 1492SP 25A
1907	PSB1046PF1907	CIRCUIT BREAKER 1492SP 6A
1908	PSB1046PF1908	TRANSFORMER SUEN LIANG SP-TBSW
1909	PSB1046PF1909	FUSE 4A 250V TIME-DELAY

REF	PART #	DESCRIPTION
1910	PSB1046PF1910	FUSE 500M 250V TIME-DELAY
1911	PSB1046PF1911	TERMINAL BAR 17P
1912	PSB1046PF1912	ELECTRICAL PANEL BACK PLATE
1913	PSB1046PF1913	STOP BUTTON
1914	PSB1046PF1914	MOTOR ON BUTTON
1915	PSB1046PF1915	MOTOR OFF BUTTON
1916	PSB1046PF1916	COOLANT PUMP ON BUTTON
1917	PSB1046PF1917	COOLANT PUMP OFF BUTTON
1918	PSB1046PF1918	POWER LAMP

Accessories

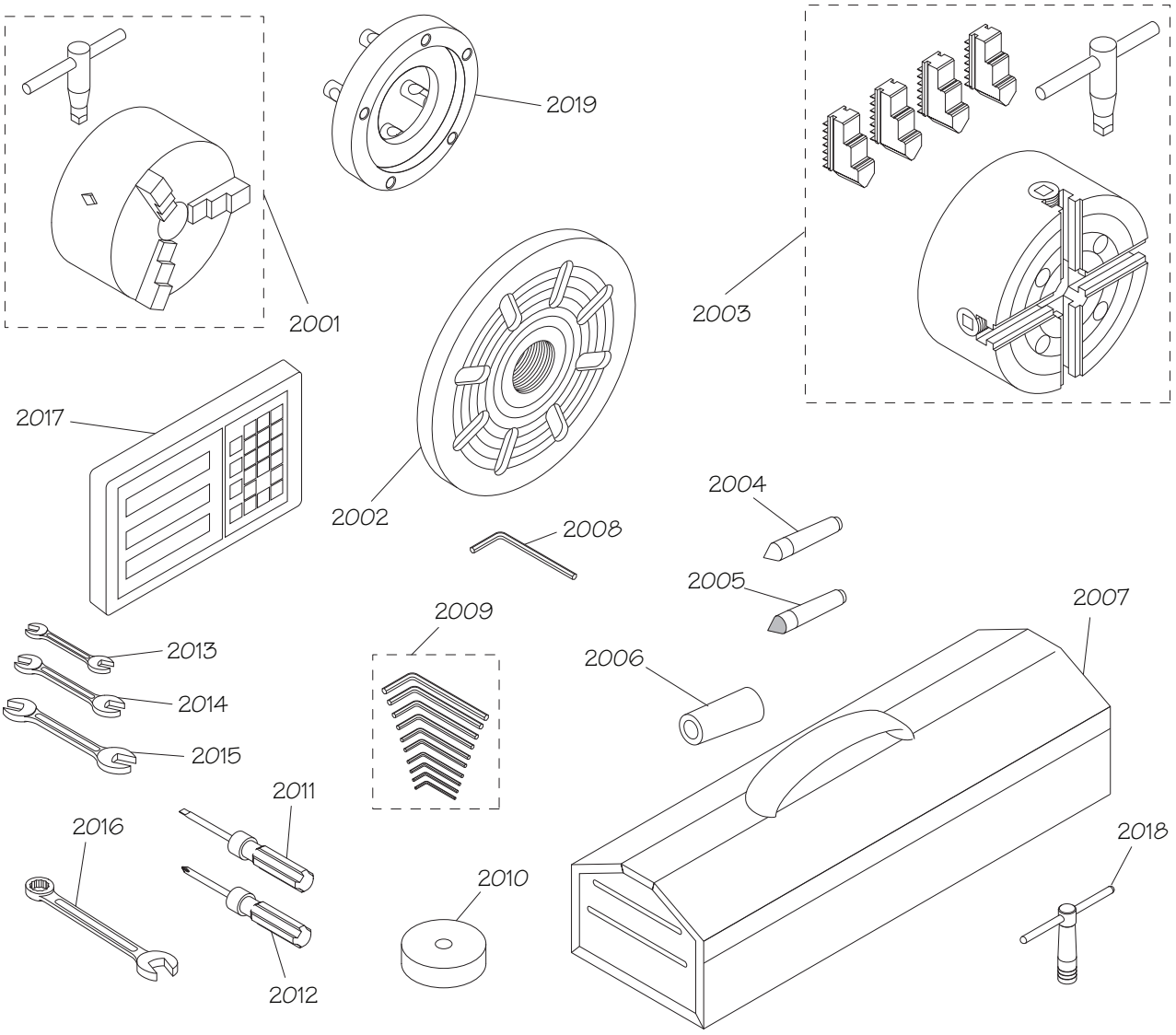

REF	PART #	DESCRIPTION
2001	SB1312	3-JAW CHUCK 12"
2002	PSB1042PF1802	FACEPLATE ASSEMBLY 14"
2003	SB1232	4-JAW CHUCK 14"
2004	PSB1042PF1804	DEAD CENTER MT#5
2005	PSB1042PF1805	DEAD CENTER CARBIDE-TIPPED MT#5
2006	PSB1042PF1806	SPINDLE SLEEVE MT#7-MT#5
2007	PSB1042PF1807	TOOL BOX
2008	PAW10M	HEX WRENCH 10MM
2009	PAW1510M	HEX WRENCH SET 1.5-10MM
2010	PSB10531710	FOOT CAST-IRON

REF	PART #	DESCRIPTION
2011	PSDF2	STANDARD SCREWDRIVER #2
2012	PSDP2	PHILLIPS SCREWDRIVER #2
2013	PWR1012	WRENCH 10/12MM
2014	PWR1417	WRENCH 14/17MM
2015	PWR2224	WRENCH 22/24MM
2016	PWR27	COMBO WRENCH 27MM
2017	PSB10531717	DRO ASSEMBLY FAGOR 20I-T 2-AXIS
2018	PSB1042PF1818	4-WAY TOOL POST WRENCH
2019	SB1404	3-JAW CHUCK D1-8 BACK PLATE 12-1/2"

Front Machine Labels

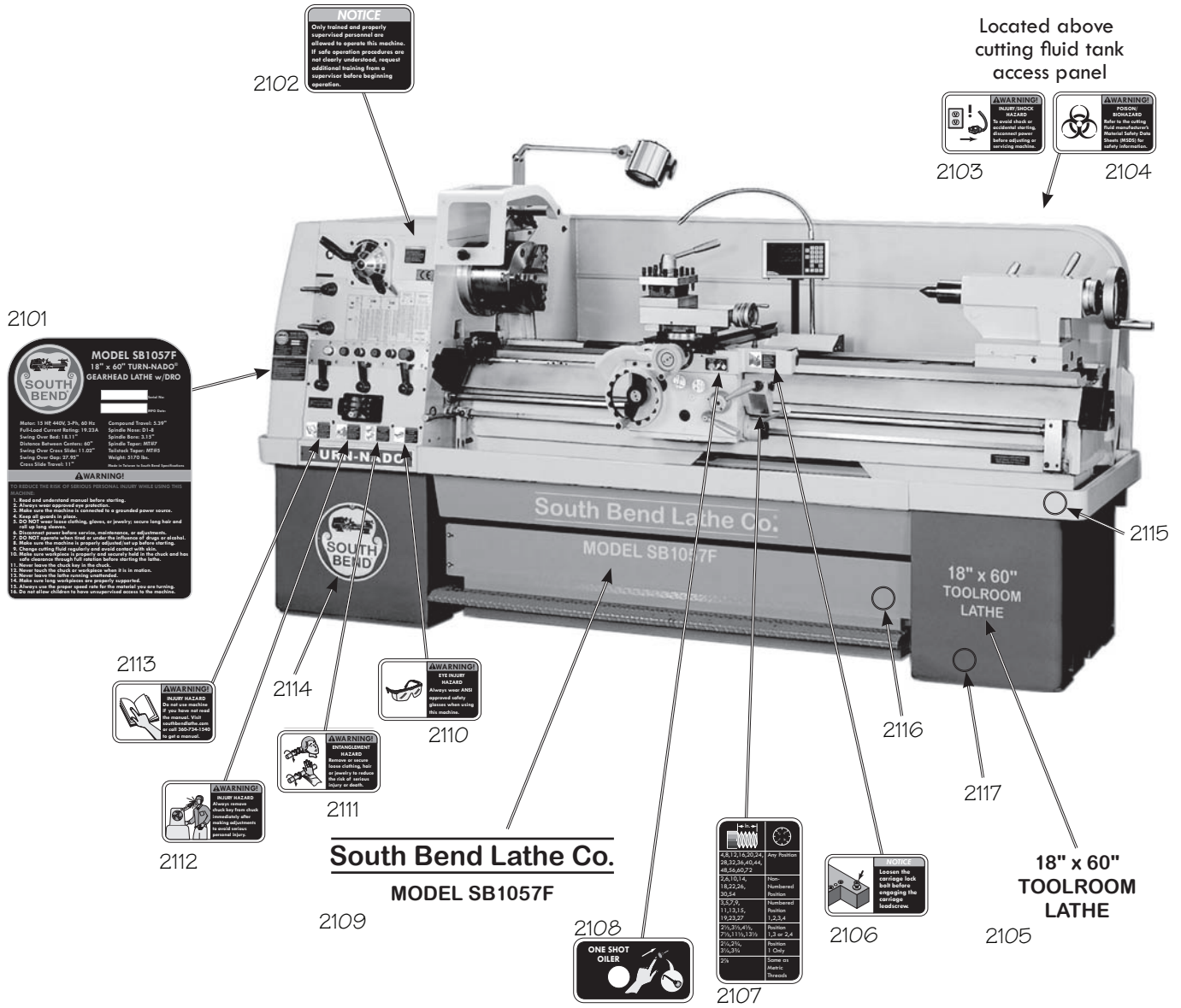

REF	PART #	DESCRIPTION
2101	PSB1046PF2101	MACHINE ID LABEL (SB1046PF)
2101	PSB1047PF2101	MACHINE ID LABEL (SB1047PF)
2101	PSB1048PF2101	MACHINE ID LABEL (SB1048PF)
2101	PSB1056F2101	MACHINE ID LABEL (SB1056F)
2101	PSB1057F2101	MACHINE ID LABEL (SB1057F)
2101	PSB1058F2101	MACHINE ID LABEL (SB1058F)
2102	PSB1048PF2102	UNTRAINED PERSONNEL LABEL
2103	PSBLABEL02HL	DISCONNECT POWER LABEL HL
2104	PSBLABEL06HL	BIOHAZARD LABEL HL
2105	PSB1046PF2105	TOOLROOM SIZE LABEL (SB1046PF)
2105	PSB1047PF2105	TOOLROOM SIZE LABEL (SB1047PF)
2105	PSB1048PF2105	TOOLROOM SIZE LABEL (SB1048PF)
2105	PSB1056F2105	TOOLROOM SIZE LABEL (SB1056F)
2105	PSB1057F2105	TOOLROOM SIZE LABEL (SB1057F)
2105	PSB1058F2105	TOOLROOM SIZE LABEL (SB1058F)
2106	PSB1048PF2106	CARRIAGE LOCK LABEL

REF	PART #	DESCRIPTION
2107	PSB1048PF2107	THREAD CHART
2108	PSB1048PF2108	ONE SHOT OILER LABEL
2109	PSB1046PF2109	MODEL NUMBER LABEL (SB1046PF)
2109	PSB1047PF2109	MODEL NUMBER LABEL (SB1047PF)
2109	PSB1048PF2109	MODEL NUMBER LABEL (SB1048PF)
2109	PSB1056F2109	MODEL NUMBER LABEL (SB1056F)
2109	PSB1057F2109	MODEL NUMBER LABEL (SB1057F)
2109	PSB1058F2109	MODEL NUMBER LABEL (SB1058F)
2110	PSBLABEL04HL	SAFETY GLASSES LABEL HL
2111	PSBLABEL08HL	ENTANGLEMENT HAZARD LABEL
2112	PSB1048PF2112	CHUCK KEY LABEL
2113	PSBLABEL01HL	READ MANUAL LABEL HL
2114	SB1322	SOUTH BEND NAMEPLATE
2115	PSBPAINT01	SB GRAY TOUCH-UP PAINT
2116	PSBPAINT02	SB LIGHT BLUE TOUCH-UP PAINT
2117	PSBPAINT03	SB DARK BLUE TOUCH-UP PAINT

Rear Machine Labels

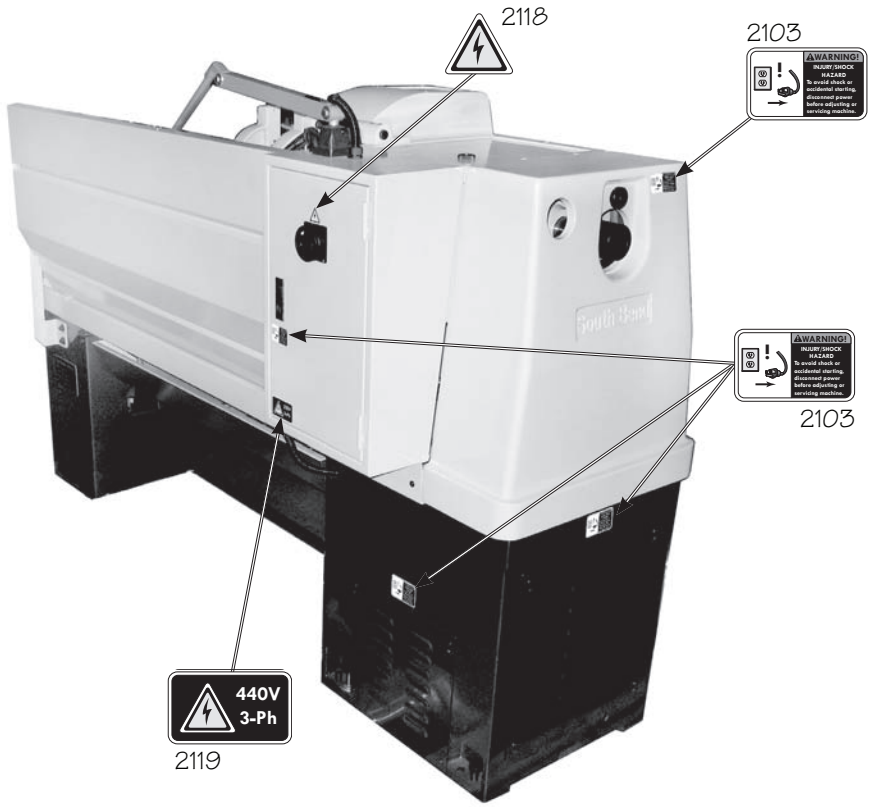

REF	PART #	DESCRIPTION
2103	PSBLABEL02HL	DISCONNECT POWER LABEL HL
2118	PSBLABEL15L	ELECTRICITY LABEL

REF	PART #	DESCRIPTION
2119	PSB1048PF2119	440V 3-PHASE LABEL

⚠WARNING

The safety labels provided with your machine are used to make the operator aware of the machine hazards and ways to prevent injury. The owner of this machine MUST maintain the original location and readability of these safety labels. If any label is removed or becomes unreadable, REPLACE that label before using the machine again. Contact South Bend Lathe Co. at (360) 734-1540 or www.southbendlathe.com to order new labels.