READ THIS FIRST

Model G0526A40

******IMPORTANT UPDATE******

For Machines Mfd. Since 03/23
and Owner's Manual Printed 12/22

For questions or help with this product contact Tech Support at (570) 546-9663 or techsupport@grizzly.com

The following changes were recently made since the owner's manual was printed:

- Column added as separate part in Inventory and Assembly.
- Motor now dual voltage (110V/220V).
- Parts have been updated.
- 110V Wiring Diagram has been updated.
- 220V Wiring Diagram added.

Aside from this information, all other content in the owner's manual applies and MUST be read and understood for your own safety. **IMPORTANT: Keep this update with the owner's manual for future reference.**

For questions or help, contact our Tech Support at (570) 546-9663 or techsupport@grizzly.com.

Revised Specifications

Electrical:

Power Requirement	110V or 220V, Single-Phase, 60 Hz
Prewired Voltage	110V
Full-Load Current Rating	18A at 110V, 9A at 220V
Minimum Circuit Size	20A at 110V, 15A at 220V
Power Cord Gauge	14 AWG
Included Plug Type	5-15 for 110V
Recommended Plug Type	6-15 for 220V

Motor:

Main

Amps	18A/9A

#KS22648 PRINTED IN TAIWAN

Revised Inventory

Box #1 Inventory (Figure 1) **Qty**

T. Column 1

Fasteners (Not Shown)

- Flat Washer 5/16" (Belt Guard) 1
- Hex Bolt 5/16"-18 x 2½" (Belt Guard) 1

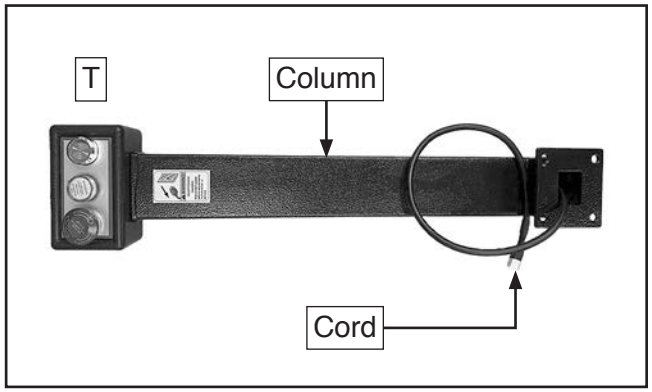

Figure 1. Box #1 additional inventory.

Revised Assembly

IMPORTANT: Do not install rear panel in **Step 11** on **Page 18** of owner's manual. Access to magnetic switch is necessary to install column.

Perform **Steps 1–19** of **Assembly** starting on **Page 17** of the owner's manual, then proceed with the following steps.

20. Install belt guard with 5/16"-18 x 2½" hex bolt and 5/16" flat washer (see **Figure 2**).

21. Install dust port, as shown in **Figure 2**, using (4) pre-installed Phillips head screws.

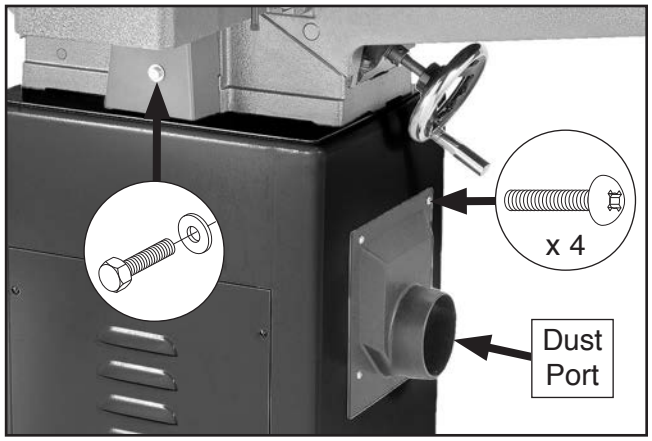

Figure 2. Belt guard and dust port installed.

22. Route control panel cord from base of column through stand cutout and connect to mag switch cord inside stand (see **Figure 3**).

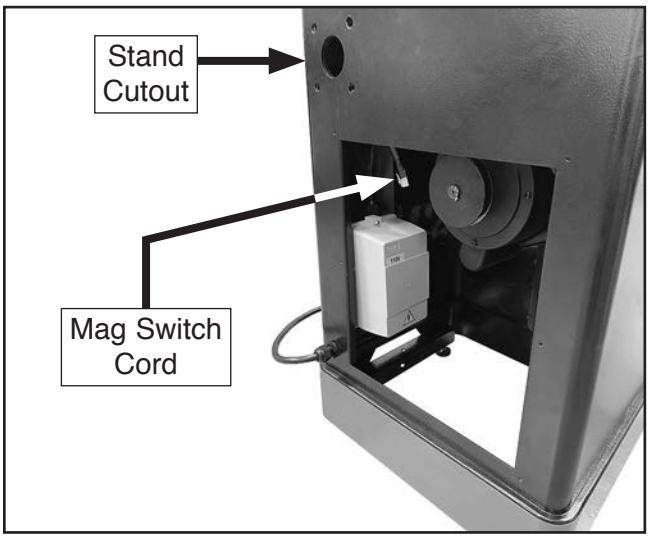

Figure 3. Connecting control panel to mag switch in stand.

23. Secure column to stand with (4) 5/16"-18 x 1" hex bolts and 5/16" flat washers (see **Figure 4**).

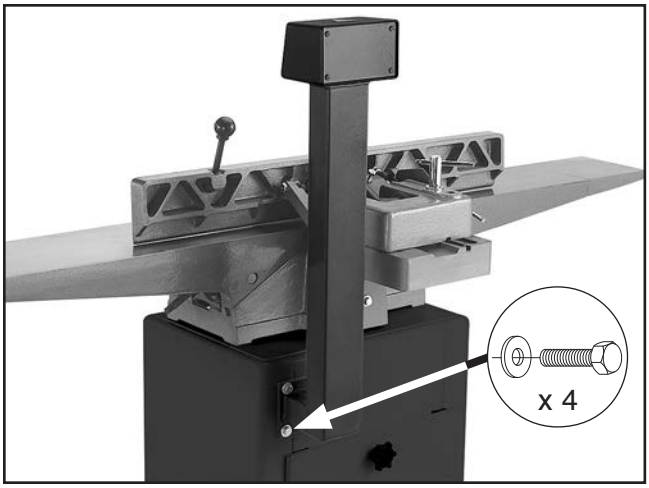

Figure 4. Column installed.

24. Install rear panel removed in **Step 4** on **Page 17** of owner's manual.

SECTION 2: POWER SUPPLY

Availability

Before installing the machine, consider the availability and proximity of the required power supply circuit. If an existing circuit does not meet the requirements for this machine, a new circuit must be installed. To minimize the risk of electrocution, fire, or equipment damage, installation work and electrical wiring must be done by an electrician or qualified service personnel in accordance with all applicable codes and standards.

WARNING

Electrocution, fire, shock, or equipment damage may occur if machine is not properly grounded and connected to power supply.

Full-Load Current Rating

The full-load current rating is the amperage a machine draws at 100% of the rated output power. On machines with multiple motors, this is the amperage drawn by the largest motor or sum of all motors and electrical devices that might operate at one time during normal operations.

Full-Load Current Rating at 110V..... 18 Amps
Full-Load Current Rating at 220V ..... 9 Amps

The full-load current is not the maximum amount of amps that the machine will draw. If the machine is overloaded, it will draw additional amps beyond the full-load rating.

If the machine is overloaded for a sufficient length of time, damage, overheating, or fire may result—especially if connected to an undersized circuit. To reduce the risk of these hazards, avoid overloading the machine during operation and make sure it is connected to a power supply circuit that meets the specified circuit requirements.

Circuit Information

A power supply circuit includes all electrical equipment between the breaker box or fuse panel in the building and the machine. The power supply circuit used for this machine must be sized to safely handle the full-load current drawn from the machine for an extended period of time. (If this machine is connected to a circuit protected by fuses, use a time delay fuse marked D.)

CAUTION

For your own safety and protection of property, consult an electrician if you are unsure about wiring practices or electrical codes in your area.

Note: *Circuit requirements in this manual apply to a dedicated circuit—where only one machine will be running on the circuit at a time. If machine will be connected to a shared circuit where multiple machines may be running at the same time, consult an electrician or qualified service personnel to ensure circuit is properly sized for safe operation.*

Circuit Requirements for 110V

This machine is prewired to operate on a power supply circuit that has a verified ground and meets the following requirements:

Nominal Voltage 110V, 115V, 120V
Cycle .....60 Hz
Phase ..... Single-Phase
Power Supply Circuit ..... 20 Amps
Plug/Receptacle ..... NEMA 5-15

Circuit Requirements for 220V

This machine can be converted to operate on a power supply circuit that has a verified ground and meets the requirements listed below. (Refer to **Voltage Conversion** instructions for details.)

Nominal Voltage 208V, 220V, 230V, 240V
Cycle .....60 Hz
Phase ..... Single-Phase
Power Supply Circuit ..... 15 Amps
Plug/Receptacle ..... NEMA 6-15

Grounding Requirements

This machine MUST be grounded. In the event of certain malfunctions or breakdowns, grounding reduces the risk of electric shock by providing a path of least resistance for electric current.

For 110V operation: This machine is equipped with a power cord that has an equipment-grounding wire and a grounding plug (see following figure). The plug must only be inserted into a matching receptacle (outlet) that is properly installed and grounded in accordance with all local codes and ordinances.

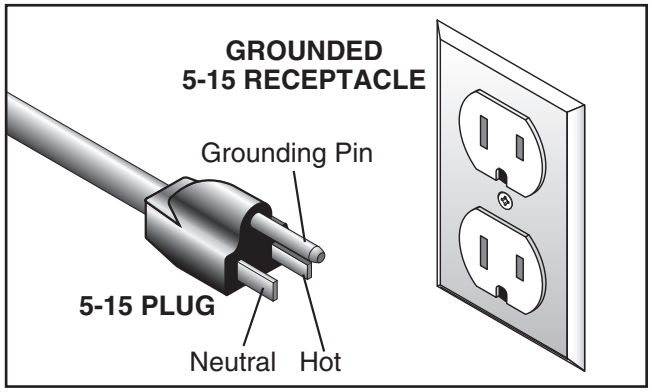

Figure 5. Typical 5-15 plug and receptacle.

⚠CAUTION

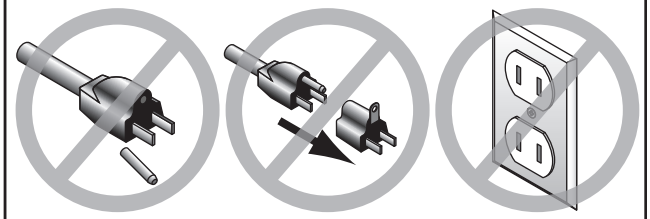

SHOCK HAZARD!
Two-prong outlets do not meet the grounding requirements for this machine. Do not modify or use an adapter on the plug provided—if it will not fit the outlet, have a qualified electrician install the proper outlet with a verified ground.

For 220V operation: The plug specified under "Circuit Requirements for 220V" on the previous page has a grounding prong that must be attached to the equipment-grounding wire on the included power cord. The plug must only be inserted into a matching receptacle (see following figure) that is properly installed and grounded in accordance with all local codes and ordinances.

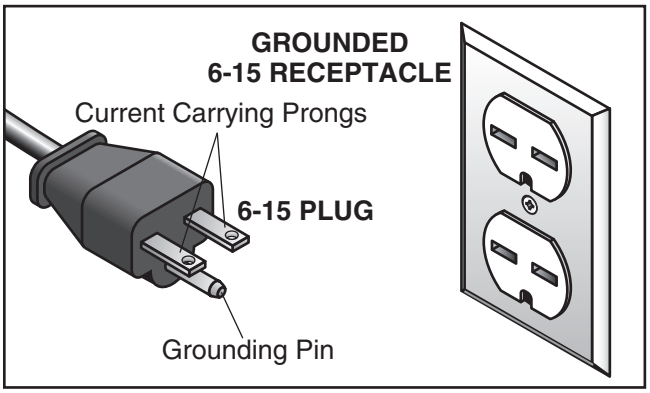

Figure 6. Typical 6-15 plug and receptacle.

Improper connection of the equipment-grounding wire can result in a risk of electric shock. The wire with green insulation (with or without yellow stripes) is the equipment-grounding wire. If repair or replacement of the power cord or plug is necessary, do not connect the equipment-grounding wire to a live (current carrying) terminal.

Check with a qualified electrician or service personnel if you do not understand these grounding requirements, or if you are in doubt about whether the tool is properly grounded. If you ever notice that a cord or plug is damaged or worn, disconnect it from power, and immediately replace it with a new one.

Extension Cords

We do not recommend using an extension cord with this machine. If you must use an extension cord, only use it if absolutely necessary and only on a temporary basis.

Extension cords cause voltage drop, which can damage electrical components and shorten motor life. Voltage drop increases as the extension cord size gets longer and the gauge size gets smaller (higher gauge numbers indicate smaller sizes).

Any extension cord used with this machine must be in good condition and contain a ground wire and matching plug/receptacle. Additionally, it must meet the following size requirements:

Minimum Gauge Size .....12 AWG
Maximum Length (Shorter is Better).....50 ft.

Converting Voltage to 220V

The voltage conversion MUST be performed by an electrician or qualified service personnel.

The voltage conversion procedure consists of rewiring the motor, replacing the magnetic switch assembly, and installing a 6-15 plug. A wiring diagram is provided on **Page 8** for your reference.

IMPORTANT: *If the diagram included on the motor conflicts with the one on **Page 8**, the motor may have changed since the manual was printed. Use the diagram provided on the motor junction box instead.*

Item(s) Needed	Qty
Phillips Head Screwdriver #2	1
Mag Switch Assembly 220V (P0526A40316X)	1
NEMA 6-15 Plug	1
Wire Nut (14 AWG x 3)	1
Wire Cutters/Stripper	1
Electrical Tape	As Needed
Masking Tape	As Needed

To convert voltage to 220V:

1. DISCONNECT MACHINE FROM POWER!

2. Cut off existing 5-15 plug.

3. Remove rear panel.

4. Open motor junction box, remove (2) wire nuts (see **Figure 7**), then disconnect wires.

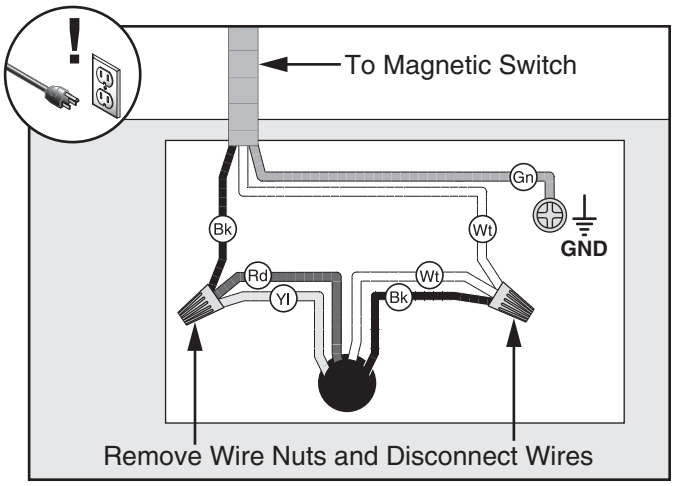

Figure 7. Motor junction box (pre-wired to 110V).

5. Use wire nuts to connect wires, as shown in **Figure 8**. Twist wire nuts onto their respective wires and wrap them with electrical tape so they will not come loose.

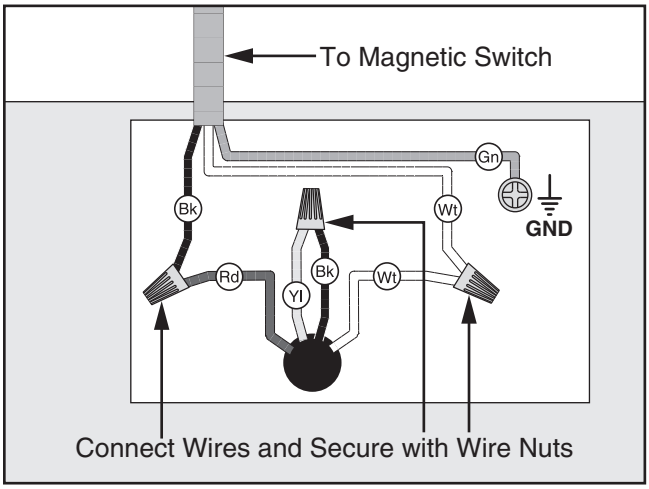

Figure 8. Motor junction box rewired to 220V.

6. Loosen (2) Phillips head screws, then remove magnetic switch cover (see **Figure 9**).

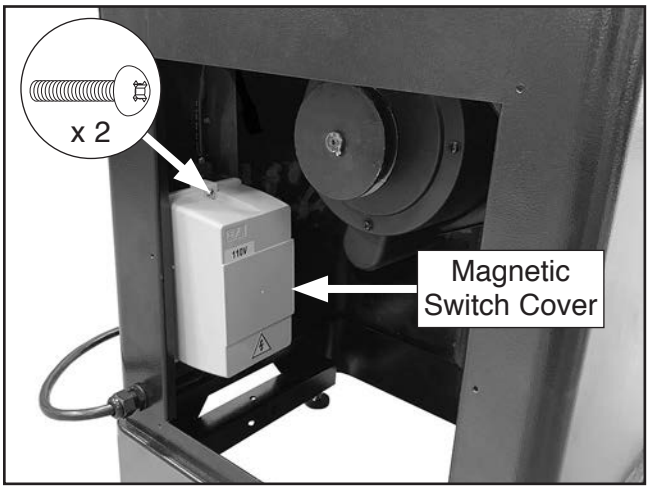

Figure 9. Magnetic switch cover location.

7. Loosen strain reliefs on top and bottom of magnetic switch assembly, then disconnect and remove control panel wiring, motor cord wiring, and power connection wiring (see **Figure 10**).

   Note: *Write terminal numbers on masking tape and attach to each wire for easier installation later on.*

8. Remove (2) Phillips head screws, then remove magnetic switch assembly (see **Figure 10**).

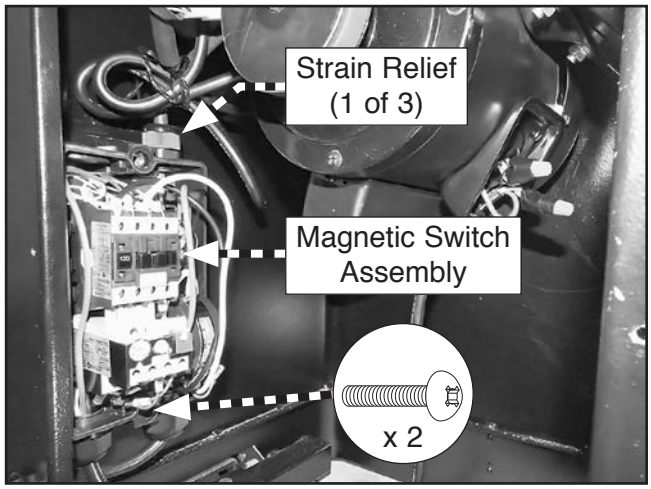

Figure 10. Magnetic switch assembly components location.

9. Remove cover from 220V magnetic switch assembly (P0526A40316X).

10. Install 220V magnetic switch assembly using (2) Phillips head screws removed in **Step 8** and secure.

11. Connect control panel wiring, motor cord wiring, and power connection wiring as shown in **220V Wiring Diagram** on **Page 8**.

12. Install a 6-15 plug according to manufacturer's instructions. If plug manufacturer's instructions are not available, NEMA standard 6-15 plug wiring is provided on **Page 8**.

13. Install motor junction box cover and magnetic switch assembly cover, then secure.

14. Install rear panel and secure.

15. Perform **Test Run** on **Page 22** of owner's manual.

Revised Parts

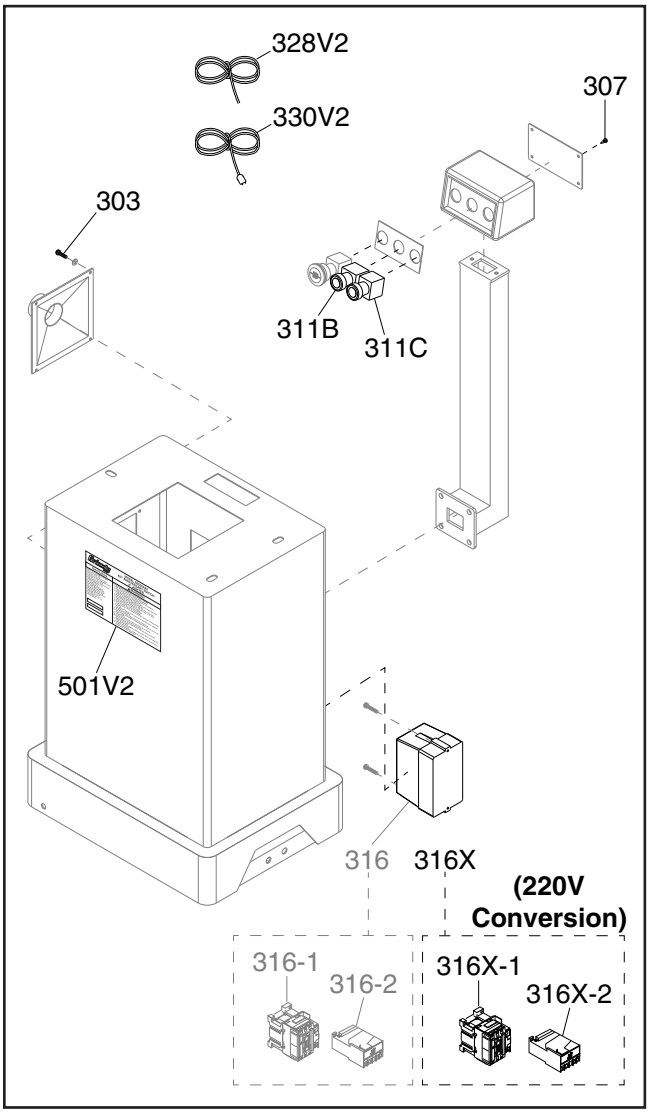

REF	PART #	DESCRIPTION
303	P0526A40303	PHLP HD SCR 10-24 X 3/8
307	P0526A40307	TAP SCREW M8 X 12
311B	P0526A40311B	INDICATOR LIGHT NHD NLD-22
311C	P0526A40311C	ON BUTTON TAICHUAN
316X	P0526A40316X	MAG SWITCH ASSY 220V
316X-1	P0526A40316X-1	CONTACTOR NHD C-09D 220V
316X-2	P0526A40316X-2	OL RELAY NHD NTH-11 8-11A
328V2	P0526A40328V2	MOTOR CORD 14G 3W 19" V2.03.23
330V2	P0526A40330V2	POWER CORD 14G 3W 86" 5-15P V2.03.23
501V2	P0526A40501V2	MACHINE ID LABEL V2.03.23

110V Wiring Diagram

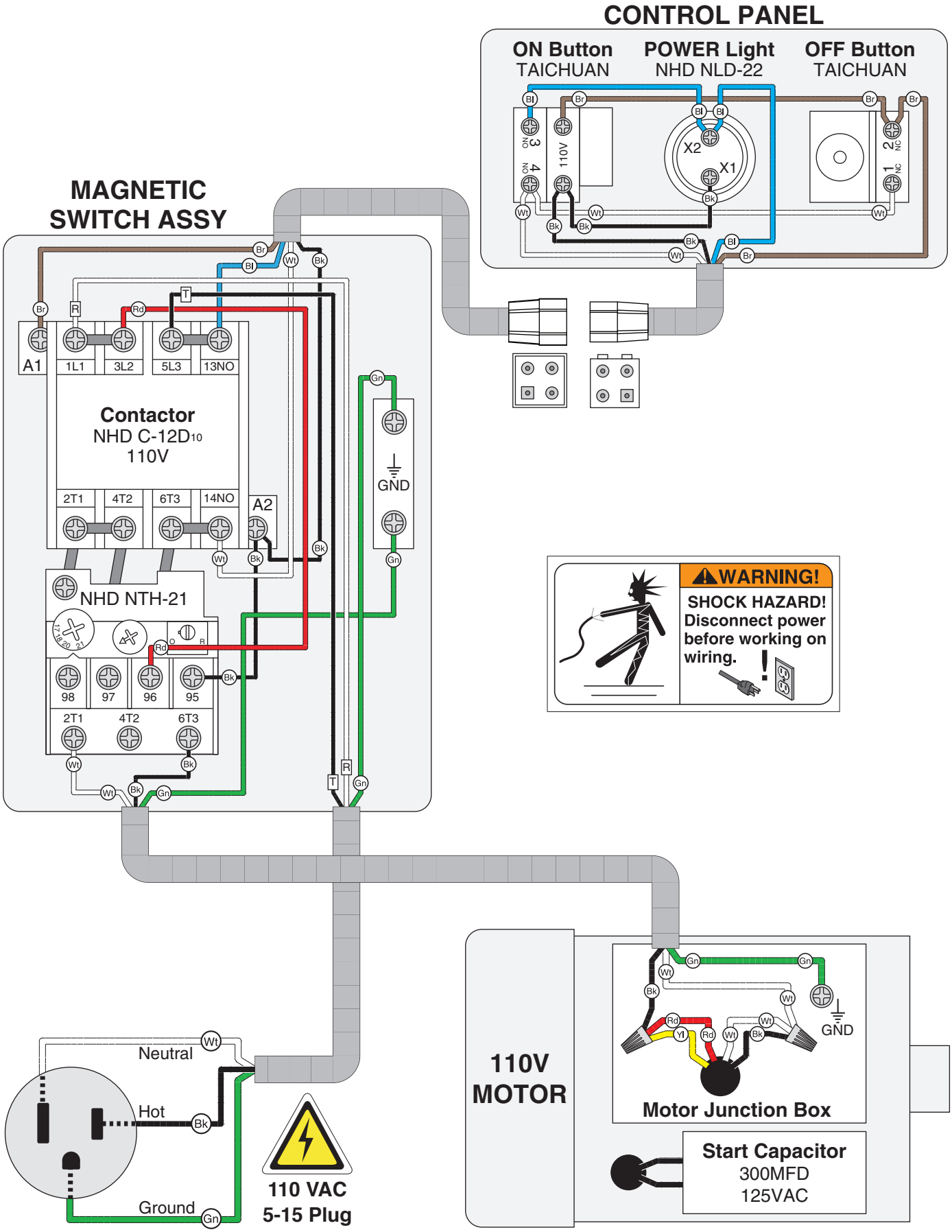

STOP *READ ELECTRICAL SAFETY ON PAGE 48 OF MANUAL!*

220V Wiring Diagram

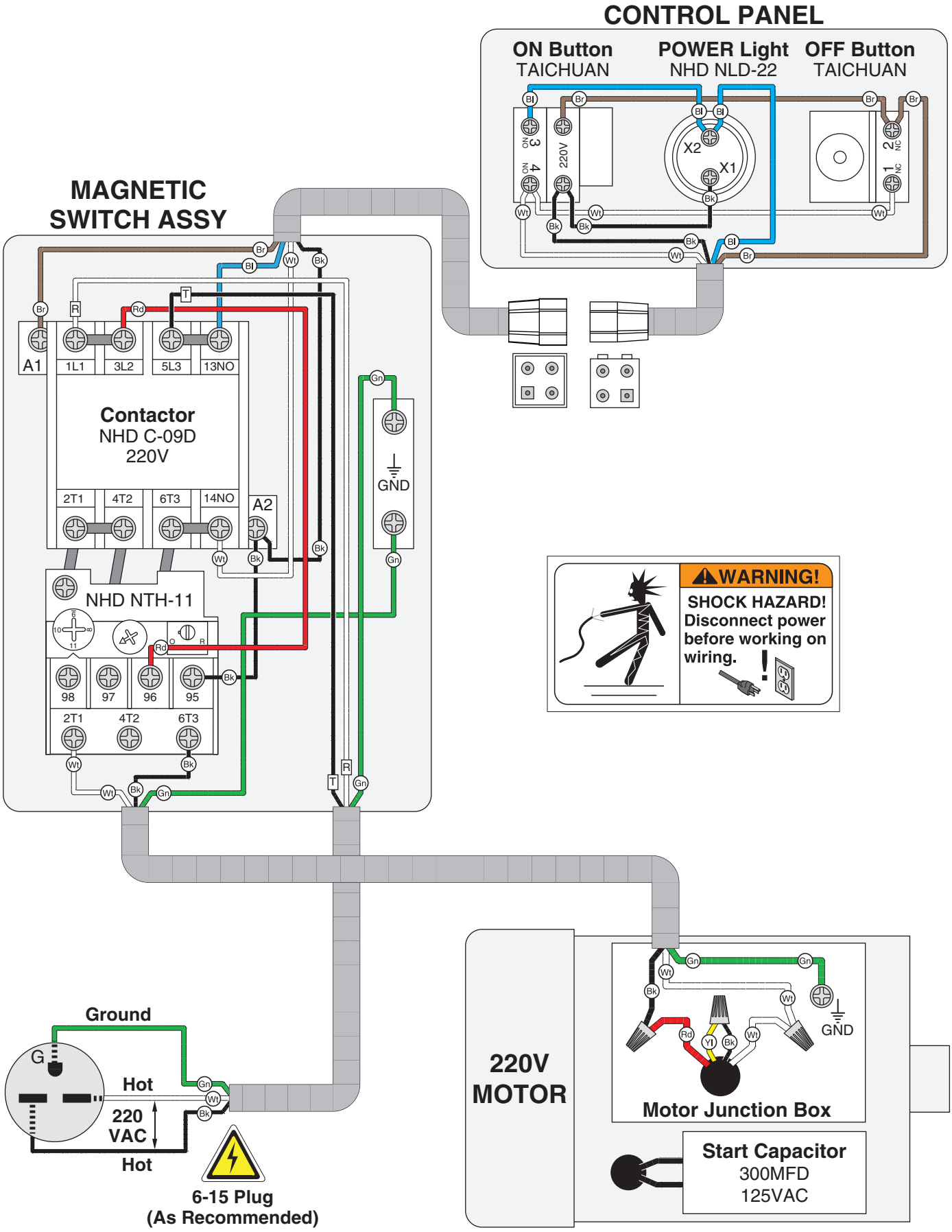

STOP *READ ELECTRICAL SAFETY ON PAGE 48 OF MANUAL!*

MODEL G0526A40
40TH ANNIVERSARY EDITION
6" JOINTER

OWNER'S MANUAL

(For models manufactured since 12/22)

#KS22533 PRINTED IN TAIWAN V1.12.22

******Keep for Future Reference******

⚠ WARNING!

This manual provides critical safety instructions on the proper setup, operation, maintenance, and service of this machine/tool. Save this document, refer to it often, and use it to instruct other operators.

Failure to read, understand and follow the instructions in this manual may result in fire or serious personal injury—including amputation, electrocution, or death.

The owner of this machine/tool is solely responsible for its safe use. This responsibility includes but is not limited to proper installation in a safe environment, personnel training and usage authorization, proper inspection and maintenance, manual availability and comprehension, application of safety devices, cutting/sanding/grinding tool integrity, and the usage of personal protective equipment.

The manufacturer will not be held liable for injury or property damage from negligence, improper training, machine modifications or misuse.

⚠ WARNING!

Some dust created by power sanding, sawing, grinding, drilling, and other construction activities contains chemicals known to the State of California to cause cancer, birth defects or other reproductive harm. Some examples of these chemicals are:

- **Lead from lead-based paints.**
- **Crystalline silica from bricks, cement and other masonry products.**
- **Arsenic and chromium from chemically-treated lumber.**

Your risk from these exposures varies, depending on how often you do this type of work. To reduce your exposure to these chemicals: Work in a well ventilated area, and work with approved safety equipment, such as those dust masks that are specially designed to filter out microscopic particles.

Table of Contents

INTRODUCTION

Contact Info

We stand behind our machines! If you have questions or need help, contact us with the information below. Before contacting, make sure you get the **serial number** and **manufacture date** from the machine ID label. This will help us help you faster.

Grizzly Technical Support
1815 W. Battlefield
Springfield, MO 65807
Phone: (570) 546-9663
Email: techsupport@grizzly.com

We want your feedback on this manual. What did you like about it? Where could it be improved? Please take a few minutes to give us feedback.

Grizzly Documentation Manager
P.O. Box 2069
Bellingham, WA 98227-2069
Email: manuals@grizzly.com

⚠WARNING

Like all machinery there is potential danger when operating this machine. Accidents are frequently caused by lack of familiarity or failure to pay attention. Use this machine with respect and caution to decrease the risk of operator injury. If normal safety precautions are overlooked or ignored, serious personal injury may occur.

⚠CAUTION

No list of safety guidelines can be complete. Every shop environment is different. Always consider safety first, as it applies to your individual working conditions. Use this and other machinery with caution and respect. Failure to do so could result in serious personal injury, damage to equipment, or poor work results.

Manual Accuracy

We are proud to provide a high-quality owner's manual with your new machine!

We made every effort to be exact with the instructions, specifications, drawings, and photographs in this manual. Sometimes we make mistakes, but our policy of continuous improvement also means that **sometimes the machine you receive is slightly different than shown in the manual**.

If you find this to be the case, and the difference between the manual and machine leaves you confused or unsure about something, check our website for an updated version. We post current manuals and manual updates for free on our website at **www.grizzly.com**.

Alternatively, you can call our Technical Support for help. Before calling, make sure you write down the **manufacture date** and **serial number** from the machine ID label (see below). This information is required for us to provide proper tech support, and it helps us determine if updated documentation is available for your machine.

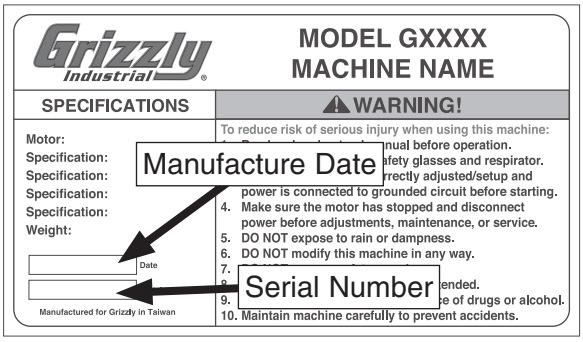

Identification

Become familiar with the names and locations of the controls and features shown below to better understand the instructions in this manual.

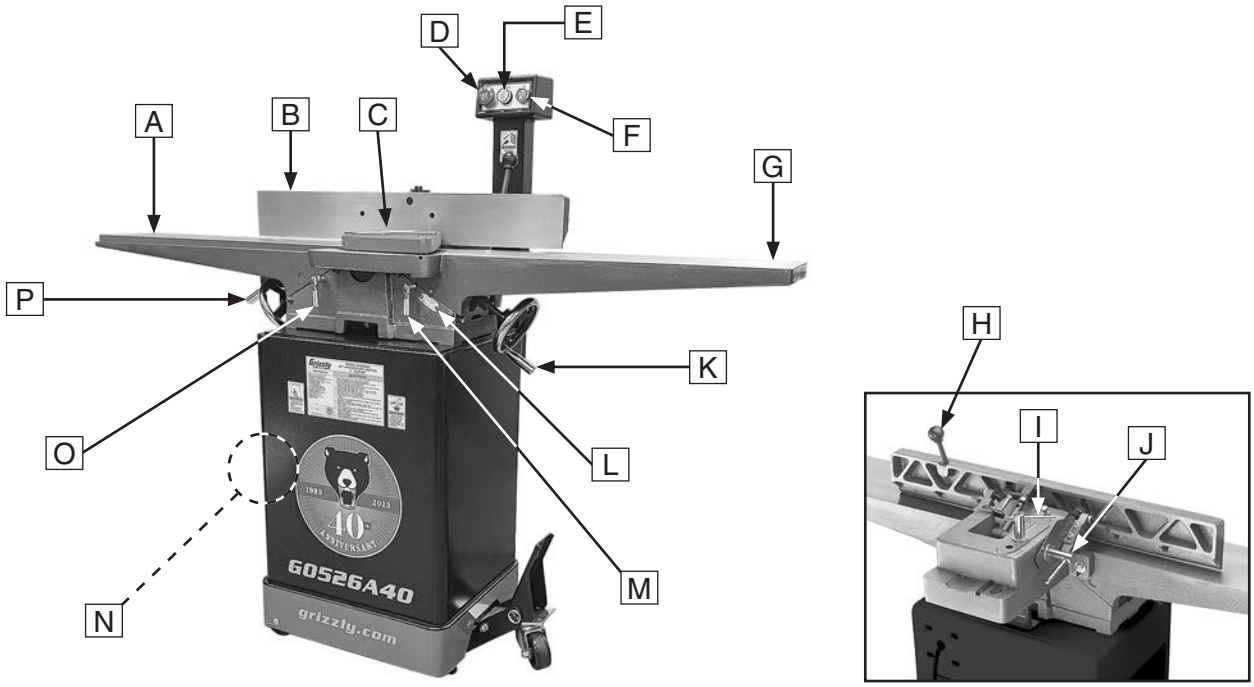

(Column Removed For Clarity)

A. Outfeed Table
B. Fence
C. Cutterhead Guard
D. OFF Button
E. POWER Light
F. ON Button
G. Infeed Table
H. Fence Tilt Handle
I. Fence Lock
J. Fence Tilt Lock
K. Infeed Table Handwheel
L. Depth Scale
M. Infeed Table Lock Handle
N. Dust Port
O. Outfeed Table Lock Handle
P. Outfeed Table Handwheel

⚠WARNING

For Your Own Safety Read Instruction Manual Before Operating Jointer

a) Wear eye protection.
b) Always keep cutterhead and drive guards in place and in proper operating condition. ALWAYS replace cutterhead guard after rabbeting operations.
c) Never make jointing or rabbeting cuts deeper than ⅛" or planing cuts deeper than 1/16".
d) Always use hold-down or push blocks when jointing material narrower than 3" or surface planing material thinner than 3".
e) Never perform jointing, planing, or rabbeting cuts on pieces shorter than 8" in length.

Controls & Components

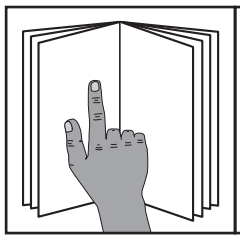

⚠WARNING

To reduce your risk of serious injury, read this entire manual BEFORE using machine.

Refer to **Figures 1–4** and the following descriptions to become familiar with the basic controls and components of this machine. Understanding these items and how they work will help you understand the rest of the manual and stay safe when operating this machine.

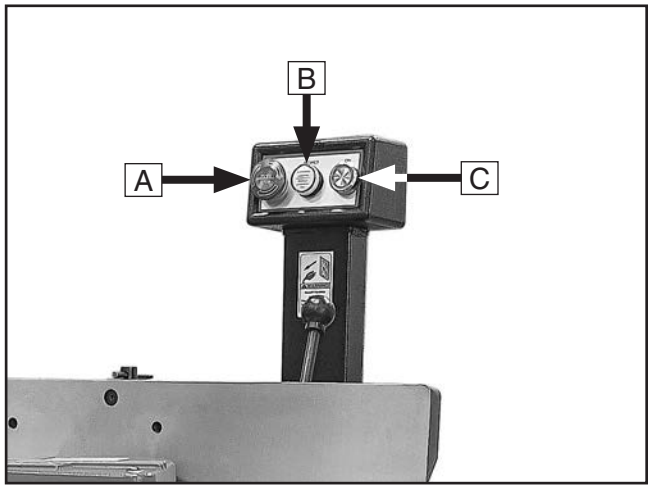

Figure 1. Power controls location.

A. OFF Button: Stops motor and disables ON button while it remains depressed. Enable ON button by turning OFF button clockwise until it pops out.

B. POWER Light: Illuminates when jointer is connected to power supply.

C. ON Button: Starts motor.

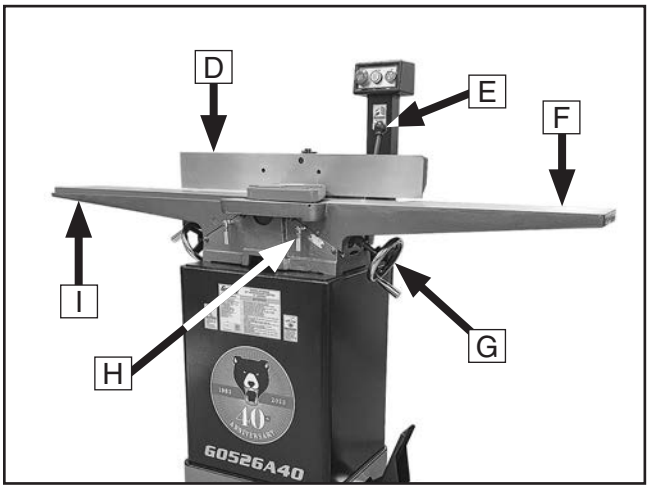

Figure 2. Table and fence controls.

D. Fence: Guides workpiece as it moves across cutterhead and determines angle of cut.

E. Fence Tilt Handle: Tilts fence throughout its range of motion from 45° inward to 45° outward (135°).

F. Infeed Table: Supports workpiece before it reaches cutterhead. Position of infeed table relative to cutterhead determines depth of cut.

G. Infeed Table Handwheel: Adjusts height of infeed table (when infeed table lock is loosened).

H. Infeed Table Lock: Loosens to allow adjustment of infeed table height; tightens to secure infeed table.

I. Outfeed Table: Supports workpiece after it passes over cutterhead. For safety and best results, outfeed table must be properly adjusted relative to cutterhead inserts before ANY operations (see **Page 39** for additional details).

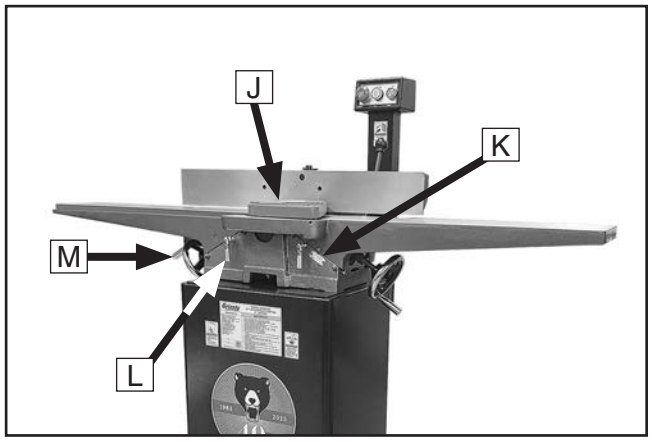

Figure 3. Cutterhead guard, depth-of-cut scale, and outfeed table controls.

J. Cutterhead Guard: Covers cutterhead until pushed out of the way by workpiece during operation. When workpiece leaves cutterhead, guard springs back to its starting position.

K. Depth Scale: Indicates cutting depth of a single pass.

L. Outfeed Table Lock: Loosens to allow adjustment of outfeed table height; tightens to secure outfeed table.

M. Outfeed Table Handwheel: Adjusts height of outfeed table. Typically only used when setting outfeed table even with cutterhead inserts or when servicing cutterhead.

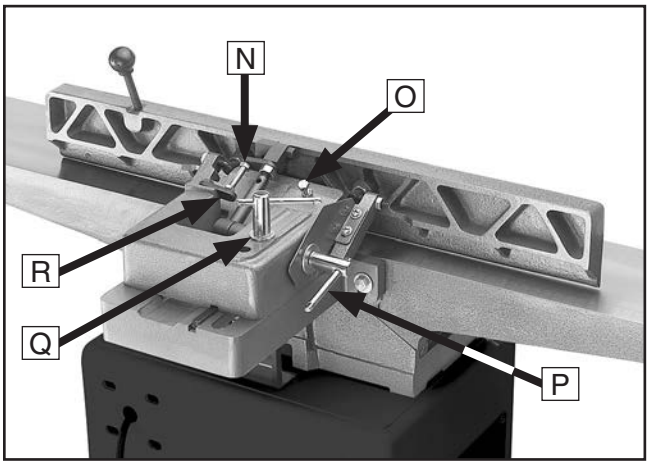

Figure 4. Fence controls.

N. 90° Fence Stop: When engaged, stops fence at 90°.

Note: *Even when fence stop bolt contacts swing stop, tilt lock must be tightened before starting machine.*

Note: *Swing stop must be disengaged for bevel cuts greater than 90°.*

O. 45° Fence Stop: Stops fence at 45° outward (135°).

Note: *Even when fence is resting against stops, tilt lock must be tightened before starting machine.*

P. Fence Tilt Lock: Secures fence tilt setting at desired angle.

Q. Fence Lock: Loosens to allow adjustment of fence position along width of tables. Tightens to secure fence.

R. Swing Stop: When engaged, stops fence at 90°. When disengaged, allows fence to adjust for bevel cuts.

MACHINE DATA SHEET

Customer Service #: (570) 546-9663 · To Order Call: (800) 523-4777 · Fax #: (800) 438-5901

MODEL G0526A40 6" JOINTER - 40TH ANNIVERSARY EDITION

Product Dimensions:

Weight..... 292 lbs.
Width (side-to-side) x Depth (front-to-back) x Height..... 60 x 20-1/2 x 40-1/2 in.
Footprint (Length x Width)..... 25 x 15-1/2 in.

Shipping Dimensions:

Carton #1

Type..... Cardboard Box
Content..... Machine
Weight..... 207 lbs.
Length x Width x Height..... 22 x 63 x 13 in.

Carton #2

Type..... Cardboard Box
Content..... Stand
Weight..... 100 lbs.
Length x Width x Height..... 21 x 18 x 29 in.

Electrical:

Power Requirement..... 110V, Single-Phase, 60 Hz
Full-Load Current Rating..... 18A
Minimum Circuit Size..... 20A
Connection Type..... Cord & Plug
Power Cord Included..... Yes
Power Cord Length..... 60 in.
Power Cord Gauge..... 12 AWG
Plug Included..... Yes
Included Plug Type..... 5-15
Switch Type..... Magnetic Switch w/Thermal Overload Protection

Motors:

Main

Horsepower..... 1.5 HP
Phase..... Single-Phase
Amps..... 18A
Speed..... 3450 RPM
Type..... TEFC Capacitor-Start Induction
Power Transfer ..... Belt
Bearings..... Shielded & Permanently Lubricated
Centrifugal Switch/Contacts Type..... Internal

Main Specifications:

Main Specifications

Jointer Size	6 in.
Bevel Jointing	0 - 45 deg. L/R
Maximum Width of Cut	6 in.
Maximum Depth of Cut	1/8 in.
Minimum Workpiece Length	8 in.
Minimum Workpiece Width	3/4 in.
Minimum Workpiece Thickness	1/2 in.
Maximum Rabbeting Depth	1/2 in.
Number of Cuts Per Minute	19,200

Fence Information

Fence Length	29-1/4 in.
Fence Width	1-1/4 in.
Fence Height	4 in.
Fence Stops	45, 90, 135 deg.

Cutterhead Information

Cutterhead Type	V-Helical
Cutterhead Diameter	2-1/2 in.
Number of Cutter Rows	4
Number of Indexable Cutters	24
Cutterhead Speed	4800 RPM

Cutter Insert Information

Cutter Insert Type	Indexable Carbide
Cutter Insert Length	15mm
Cutter Insert Width	15mm
Cutter Insert Thickness	2.5mm

Table Information

Table Length	60 in.
Table Width	7-1/4 in.
Floor to Table Height	33 in.
Table Adjustment Type	Handwheels
Table Movement Type	Dovetailed Ways

Construction

Body Assembly	Cast Iron
Cabinet	Steel
Fence Assembly	Cast Iron
Guard	Die-Cast Aluminum
Table	Precision-Ground Cast Iron
Paint Type/Finish	Powder Coated

Other Information

Number of Dust Ports	1
Dust Port Size	4 in.
Mobile Base	Built-In

Other Specifications:

Country of Origin	Taiwan
Warranty	1 Year
Approximate Assembly & Setup Time	1 Hour
Serial Number Location	ID Label

SECTION 1: SAFETY

For Your Own Safety, Read Instruction Manual Before Operating This Machine

The purpose of safety symbols is to attract your attention to possible hazardous conditions. This manual uses a series of symbols and signal words intended to convey the level of importance of the safety messages. The progression of symbols is described below. Remember that safety messages by themselves do not eliminate danger and are not a substitute for proper accident prevention measures. Always use common sense and good judgment.

DANGER	**Indicates an imminently hazardous situation which, if not avoided, WILL result in death or serious injury.**
WARNING	**Indicates a potentially hazardous situation which, if not avoided, COULD result in death or serious injury.**
CAUTION	**Indicates a potentially hazardous situation which, if not avoided, MAY result in minor or moderate injury. It may also be used to alert against unsafe practices.**
NOTICE	**Alerts the user to useful information about proper operation of the machine to avoid machine damage.**

Safety Instructions for Machinery

WARNING

OWNER'S MANUAL. Read and understand this owner's manual BEFORE using machine.

TRAINED OPERATORS ONLY. Untrained operators have a higher risk of being hurt or killed. Only allow trained/supervised people to use this machine. When machine is not being used, disconnect power, remove switch keys, or lock-out machine to prevent unauthorized use—especially around children. Make your workshop kid proof!

DANGEROUS ENVIRONMENTS. Do not use machinery in areas that are wet, cluttered, or have poor lighting. Operating machinery in these areas greatly increases the risk of accidents and injury.

MENTAL ALERTNESS REQUIRED. Full mental alertness is required for safe operation of machinery. Never operate under the influence of drugs or alcohol, when tired, or when distracted.

ELECTRICAL EQUIPMENT INJURY RISKS. You can be shocked, burned, or killed by touching live electrical components or improperly grounded machinery. To reduce this risk, only allow qualified service personnel to do electrical installation or repair work, and always disconnect power before accessing or exposing electrical equipment.

DISCONNECT POWER FIRST. Always disconnect machine from power supply BEFORE making adjustments, changing tooling, or servicing machine. This prevents an injury risk from unintended startup or contact with live electrical components.

EYE PROTECTION. Always wear ANSI-approved safety glasses or a face shield when operating or observing machinery to reduce the risk of eye injury or blindness from flying particles. Everyday eyeglasses are NOT approved safety glasses.

⚠WARNING

WEARING PROPER APPAREL. Do not wear clothing, apparel or jewelry that can become entangled in moving parts. Always tie back or cover long hair. Wear non-slip footwear to reduce risk of slipping and losing control or accidentally contacting cutting tool or moving parts.

HAZARDOUS DUST. Dust created by machinery operations may cause cancer, birth defects, or long-term respiratory damage. Be aware of dust hazards associated with each workpiece material. Always wear a NIOSH-approved respirator to reduce your risk.

HEARING PROTECTION. Always wear hearing protection when operating or observing loud machinery. Extended exposure to this noise without hearing protection can cause permanent hearing loss.

REMOVE ADJUSTING TOOLS. Tools left on machinery can become dangerous projectiles upon startup. Never leave chuck keys, wrenches, or any other tools on machine. Always verify removal before starting!

USE CORRECT TOOL FOR THE JOB. Only use this tool for its intended purpose—do not force it or an attachment to do a job for which it was not designed. Never make unapproved modifications—modifying tool or using it differently than intended may result in malfunction or mechanical failure that can lead to personal injury or death!

AWKWARD POSITIONS. Keep proper footing and balance at all times when operating machine. Do not overreach! Avoid awkward hand positions that make workpiece control difficult or increase the risk of accidental injury.

CHILDREN & BYSTANDERS. Keep children and bystanders at a safe distance from the work area. Stop using machine if they become a distraction.

GUARDS & COVERS. Guards and covers reduce accidental contact with moving parts or flying debris. Make sure they are properly installed, undamaged, and working correctly BEFORE operating machine.

FORCING MACHINERY. Do not force machine. It will do the job safer and better at the rate for which it was designed.

NEVER STAND ON MACHINE. Serious injury may occur if machine is tipped or if the cutting tool is unintentionally contacted.

STABLE MACHINE. Unexpected movement during operation greatly increases risk of injury or loss of control. Before starting, verify machine is stable and mobile base (if used) is locked.

USE RECOMMENDED ACCESSORIES. Consult this owner's manual or the manufacturer for recommended accessories. Using improper accessories will increase the risk of serious injury.

UNATTENDED OPERATION. To reduce the risk of accidental injury, turn machine ***OFF*** and ensure all moving parts completely stop before walking away. Never leave machine running while unattended.

MAINTAIN WITH CARE. Follow all maintenance instructions and lubrication schedules to keep machine in good working condition. A machine that is improperly maintained could malfunction, leading to serious personal injury or death.

DAMAGED PARTS. Regularly inspect machine for damaged, loose, or mis-adjusted parts—or any condition that could affect safe operation. Immediately repair/replace BEFORE operating machine. For your own safety, DO NOT operate machine with damaged parts!

MAINTAIN POWER CORDS. When disconnecting cord-connected machines from power, grab and pull the plug—NOT the cord. Pulling the cord may damage the wires inside. Do not handle cord/plug with wet hands. Avoid cord damage by keeping it away from heated surfaces, high traffic areas, harsh chemicals, and wet/damp locations.

EXPERIENCING DIFFICULTIES. If at any time you experience difficulties performing the intended operation, stop using the machine! Contact our Technical Support at (570) 546-9663.

Additional Safety for Jointers

⚠WARNING

Serious cuts, amputation, entanglement, or death can occur from contact with rotating cutterhead or other moving components! Flying chips from cutting operations can cause eye injuries or blindness. Workpieces or inserts/knives thrown by cutterhead (kickback) can strike nearby operator or bystanders with deadly force. To reduce the risk of serious personal injury from these hazards, operator and bystanders MUST completely heed the hazards and warnings below.

KICKBACK. Occurs when workpiece is ejected from machine at a high rate of speed. Kickback injuries occur from getting struck by workpiece or hands being pulled into cutterhead. To reduce the risk of kickback, only use proper workpieces, safe feeding techniques, and proper machine setup or maintenance.

GUARD REMOVAL. Operating jointer without guards unnecessarily exposes operator to knives/inserts and other hazardous moving parts. Except when rabbeting, never operate jointer or allow it to be connected to power if any guards are removed. Turn jointer ***OFF*** and disconnect power before clearing any shavings or sawdust from around cutterhead. After rabbeting or maintenance is complete, immediately replace all guards and ensure they are properly installed/adjusted before resuming regular operations.

DULL OR DAMAGED KNIVES/INSERTS. Dull or damaged knives/inserts increase risk of kickback and cause poor workpiece finish. Only use sharp, undamaged knives/inserts.

OUTFEED TABLE ALIGNMENT. Setting outfeed table too high can cause workpiece to hit table or get stuck while feeding. Setting outfeed table too low may cause workpiece to rock or shift while feeding. Both of these results will increase risk of kickback. Always keep outfeed table even with knives/inserts at highest point during rotation.

INSPECTING STOCK. Impact injuries or kickback may result from using improper workpieces. Thoroughly inspect and prepare workpiece before cutting. Verify workpiece is free of nails, staples, loose knots or other foreign material. Always joint warped workpieces with cupped side facing down.

MAXIMUM CUTTING DEPTH. To reduce risk of kickback, never cut deeper than ⅛" per pass.

GRAIN DIRECTION. Jointing against the grain or end grain can increase risk of kickback. It also requires more cutting force, which produces chatter or excessive chip out. Always joint or surface plane WITH the grain.

CUTTING LIMITATIONS. Cutting workpieces that do not meet minimum dimension requirements can result in kickback or accidental contact with cutterhead. Never perform jointing, planing, or rabbeting cuts on pieces smaller than specified in machine data sheet.

PUSH BLOCKS. Push blocks reduce risk of accidental cutterhead contact with hands. Always use push blocks when planing materials less than 3" high or wide. Never pass your hands directly over cutterhead without a push block.

WORKPIECE SUPPORT. Poor workpiece support or loss of workpiece control while feeding will increase risk of kickback or accidental contact with cutterhead. Support workpiece with fence continuously during operation. Support long stock with auxiliary tables if necessary.

FEED WORKPIECE PROPERLY. Kickback or accidental cutterhead contact may result if workpiece is fed into cutterhead the wrong way. Allow cutterhead to reach full speed before feeding. Never start jointer with workpiece touching cutterhead. Always feed workpiece from infeed side to outfeed side without stopping until cut is complete. Never move workpiece backwards while feeding.

SECURE KNIVES/INSERTS. Loose knives or improperly set inserts can be thrown from cutterhead with dangerous force. Always verify knives/inserts are secure and properly adjusted before operation. Straight knives should never project more than ⅛" (0.125") from cutterhead body.

SECTION 2: POWER SUPPLY

Availability

Before installing the machine, consider the availability and proximity of the required power supply circuit. If an existing circuit does not meet the requirements for this machine, a new circuit must be installed. To minimize the risk of electrocution, fire, or equipment damage, installation work and electrical wiring must be done by an electrician or qualified service personnel in accordance with all applicable codes and standards.

⚠WARNING

Electrocution, fire, shock, or equipment damage may occur if machine is not properly grounded and connected to power supply.

Full-Load Current Rating

The full-load current rating is the amperage a machine draws at 100% of the rated output power. On machines with multiple motors, this is the amperage drawn by the largest motor or sum of all motors and electrical devices that might operate at one time during normal operations.

Full-Load Current Rating at 110V..... 18 Amps

The full-load current is not the maximum amount of amps that the machine will draw. If the machine is overloaded, it will draw additional amps beyond the full-load rating.

If the machine is overloaded for a sufficient length of time, damage, overheating, or fire may result—especially if connected to an undersized circuit. To reduce the risk of these hazards, avoid overloading the machine during operation and make sure it is connected to a power supply circuit that meets the specified circuit requirements.

⚠WARNING

Serious injury could occur if you connect machine to power before completing setup process. DO NOT connect to power until instructed later in this manual.

110V Circuit Requirements

This machine is prewired to operate on a power supply circuit that has a verified ground and meets the following requirements:

Nominal Voltage 110V, 115V, 120V
Cycle .....60 Hz
Phase ..... Single-Phase
Power Supply Circuit ..... 20 Amps
Plug/Receptacle ..... NEMA 5-15

A power supply circuit includes all electrical equipment between the breaker box or fuse panel in the building and the machine. The power supply circuit used for this machine must be sized to safely handle the full-load current drawn from the machine for an extended period of time. (If this machine is connected to a circuit protected by fuses, use a time delay fuse marked D.)

⚠CAUTION

For your own safety and protection of property, consult an electrician if you are unsure about wiring practices or electrical codes in your area.

Note: *Circuit requirements in this manual apply to a dedicated circuit—where only one machine will be running on the circuit at a time. If machine will be connected to a shared circuit where multiple machines may be running at the same time, consult an electrician or qualified service personnel to ensure circuit is properly sized for safe operation.*

Grounding & Plug Requirements

This machine MUST be grounded. In the event of certain malfunctions or breakdowns, grounding reduces the risk of electric shock by providing a path of least resistance for electric current.

This machine is equipped with a power cord that has an equipment-grounding wire and a grounding plug. Only insert plug into a matching receptacle (outlet) that is properly installed and grounded in accordance with all local codes and ordinances. DO NOT modify the provided plug!

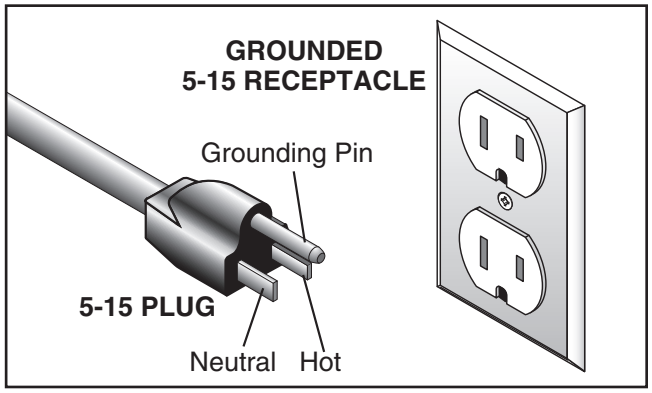

Figure 5. Typical 5-15 plug and receptacle.

⚠CAUTION

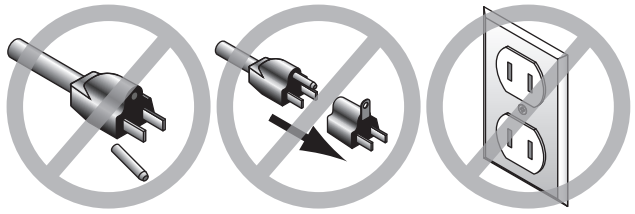

SHOCK HAZARD!
Two-prong outlets do not meet the grounding requirements for this machine. Do not modify or use an adapter on the plug provided—if it will not fit the outlet, have a qualified electrician install the proper outlet with a verified ground.

Improper connection of the equipment-grounding wire can result in a risk of electric shock. The wire with green insulation (with or without yellow stripes) is the equipment-grounding wire. If repair or replacement of the power cord or plug is necessary, do not connect the equipment-grounding wire to a live (current carrying) terminal.

Check with a qualified electrician or service personnel if you do not understand these grounding requirements, or if you are in doubt about whether the tool is properly grounded. If you ever notice that a cord or plug is damaged or worn, disconnect it from power, and immediately replace it with a new one.

Extension Cords

We do not recommend using an extension cord with this machine. If you must use an extension cord, only use it if absolutely necessary and only on a temporary basis.

Extension cords cause voltage drop, which can damage electrical components and shorten motor life. Voltage drop increases as the extension cord size gets longer and the gauge size gets smaller (higher gauge numbers indicate smaller sizes).

Any extension cord used with this machine must be in good condition and contain a ground wire and matching plug/receptacle. Additionally, it must meet the following size requirements:

Minimum Gauge Size .....12 AWG
Maximum Length (Shorter is Better).....50 ft.

SECTION 3: SETUP

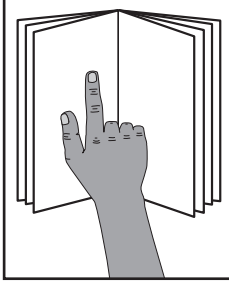

⚠WARNING

This machine presents serious injury hazards to untrained users. Read through this entire manual to become familiar with the controls and operations before starting the machine!

⚠WARNING

Wear safety glasses during the entire setup process!

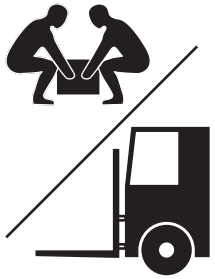

⚠WARNING

HEAVY LIFT!

Straining or crushing injury may occur from improperly lifting machine or some of its parts. To reduce this risk, get help from other people and use a forklift (or other lifting equipment) rated for weight of this machine.

Needed for Setup

The following items are needed, but not included, for the setup/assembly of this machine.

Description	Qty
• Safety Glasses (for each person)	1
• Additional Person	1
• Solvent/Cleaner	As Needed
• Disposable Rags/Gloves	As Needed
• Scrap Wood	As Needed
• Wrench or Socket ½", 9⁄16"	1
• Straightedge 4'	1
• Stubby Phillips Head Screwdriver #2	1
• Dust Collection System	1
• 4" Dust Hose (length as needed)	1
• 4" Hose Clamp	1

Unpacking

This machine was carefully packaged for safe transport. When unpacking, separate all enclosed items from packaging materials and inspect them for shipping damage. ***If items are damaged, please call us immediately at (570) 546-9663.***

IMPORTANT: Save all packaging materials until you are completely satisfied with the machine and have resolved any issues between Grizzly or the shipping agent. *You MUST have the original packaging to file a freight claim. It is also extremely helpful if you need to return your machine later.*

Inventory

The following is a list of items shipped with your machine. Before beginning setup, lay these items out and inventory them.

If any non-proprietary parts are missing (e.g. a nut or a washer), we will gladly replace them; or for the sake of expediency, replacements can be obtained at your local hardware store.

Box #1 Inventory (Figure 6) Qty

A. Jointer Assembly w/Carriage Mount..... 1
B. Fence Assembly & Carriage 1
C. Cutterhead Guard Assembly..... 1
D. Belt Guard 1
E. Safety Push Blocks 2
F. Hex Wrench 3mm..... 1
G. V-Belt A36 1
H. Fence Lock Handle 1
I. Fence Tilt Lever..... 1
J. Open-End Wrenches 8/10, 12/14mm ...1 Ea.
K. T-Handle Torx Wrench ¼" 1
L. T20 Torx Bits 5
M. Flat Hd Torx Screws M6-1 x 15 10
N. Indexable Inserts 15 x 15 x 2.5mm 5
O. Carriage Support Key ⅜" x ⅜" x 9" 1
P. Handwheels..... 2
Q. Fixed Handles 2
R. Dust Port 4" 1
S. Foot Pedal Caster Assembly..... 1

Fasteners (Not Shown)

- Hex Bolts ⅜"-16 x ¾" (Jointer/Stand)..... 3
- Lock Washers ⅜" (Jointer/Stand)..... 3
- Hex Bolts 5⁄16"-18 x 1" (Column)..... 4
- Flat Washers 5⁄16" (Column)..... 4
- Flat Washer ½" (Fence Lock) 1
- Locking Jam Nut (Fence Lock) 1
- Flat Washer 5mm (Belt Guard) 1
- Hex Bolt 8-32 x ⅜" (Belt Guard)..... 1
- Hex Bolt 5⁄16"-18 x 2" (Foot Pedal) 1
- Flat Washer 5⁄16" (Foot Pedal)..... 1
- Flat Washers ⅜" (Foot Pedal)..... 4
- Hex Nuts ⅜"-16 (Foot Pedal) 2
- Hex Bolts ⅜"-16 x 2½" (Foot Pedal) 2

Box #2 Inventory (Not Shown) Qty

- Stand Assembly w/Motor 1

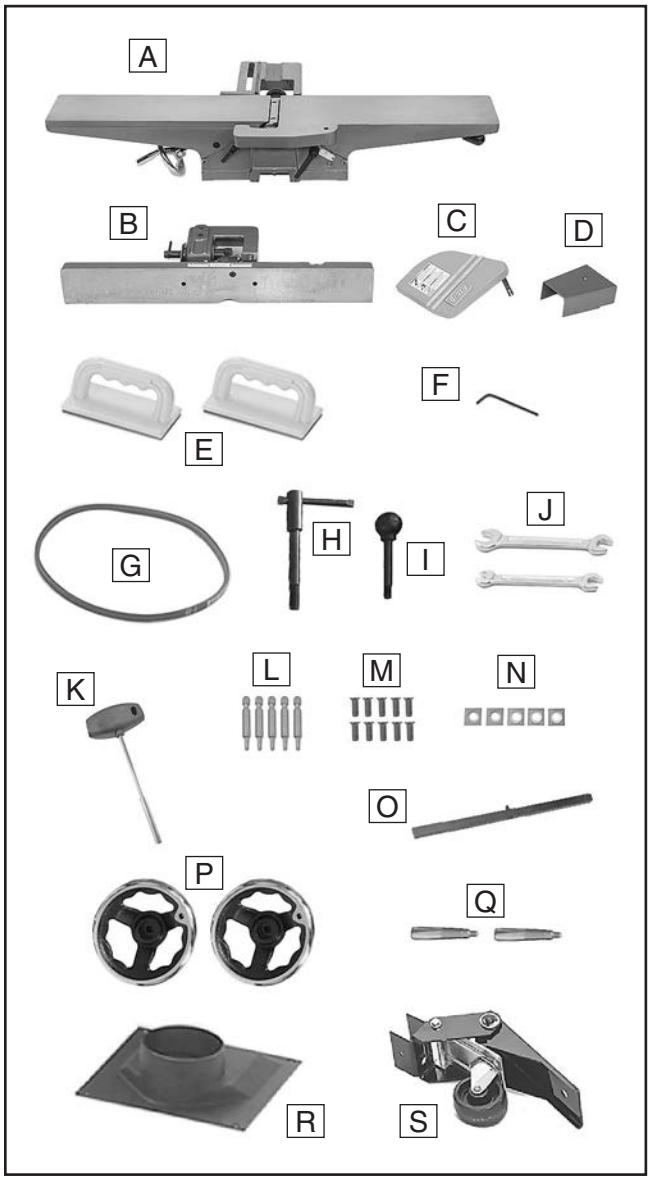

Figure 6. Box #1 inventory.

NOTICE

If you cannot find an item on this list, carefully check around/inside the machine and packaging materials. Often, these items get lost in packaging materials while unpacking or they are pre-installed at the factory.

Cleanup

The unpainted surfaces of your machine are coated with a heavy-duty rust preventative that prevents corrosion during shipment and storage. This rust preventative works extremely well, but it will take a little time to clean.

Be patient and do a thorough job cleaning your machine. The time you spend doing this now will give you a better appreciation for the proper care of your machine's unpainted surfaces.

There are many ways to remove this rust preventative, but the following steps work well in a wide variety of situations. Always follow the manufacturer's instructions with any cleaning product you use and make sure you work in a well-ventilated area to minimize exposure to toxic fumes.

Before cleaning, gather the following:
- Disposable rags
- Cleaner/degreaser (WD•40 works well)
- Safety glasses & disposable gloves
- Plastic paint scraper (optional)

Basic steps for removing rust preventative:

1. Put on safety glasses.

2. Coat the rust preventative with a liberal amount of cleaner/degreaser, then let it soak for 5–10 minutes.

3. Wipe off the surfaces. If your cleaner/degreaser is effective, the rust preventative will wipe off easily. If you have a plastic paint scraper, scrape off as much as you can first, then wipe off the rest with the rag.

4. Repeat **Steps 2–3** as necessary until clean, then coat all unpainted surfaces with a quality metal protectant to prevent rust.

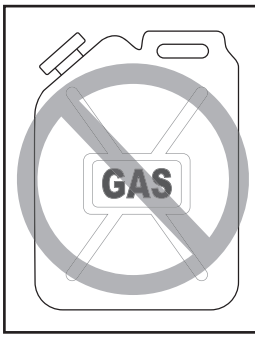

WARNING

Gasoline and petroleum products have low flash points and can explode or cause fire if used to clean machinery. Avoid using these products to clean machinery.

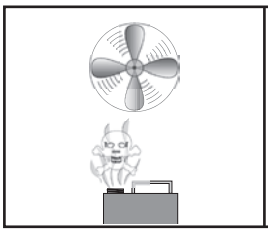

CAUTION

Many cleaning solvents are toxic if inhaled. Only work in a well-ventilated area.

NOTICE

Avoid harsh solvents like acetone or brake parts cleaner that may damage painted surfaces. Always test on a small, inconspicuous location first.

T23692—Orange Power Degreaser
A great product for removing the waxy shipping grease from the ***non-painted*** parts of the machine during clean up.

Figure 7. T23692 Orange Power Degreaser.

Site Considerations

Weight Load

Refer to the **Machine Data Sheet** for the weight of your machine. Make sure that the surface upon which the machine is placed will bear the weight of the machine, additional equipment that may be installed on the machine, and the heaviest workpiece that will be used. Additionally, consider the weight of the operator and any dynamic loading that may occur when operating the machine.

Space Allocation

Consider the largest size of workpiece that will be processed through this machine and provide enough space around the machine for adequate operator material handling or the installation of auxiliary equipment. With permanent installations, leave enough space around the machine to open or remove doors/covers as required by the maintenance and service described in this manual. **See below for required space allocation.**

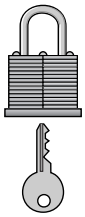

⚠CAUTION

Children or untrained people may be seriously injured by this machine. Only install in an access restricted location.

Physical Environment

The physical environment where the machine is operated is important for safe operation and longevity of machine components. For best results, operate this machine in a dry environment that is free from excessive moisture, hazardous chemicals, airborne abrasives, or extreme conditions. Extreme conditions for this type of machinery are generally those where the ambient temperature range exceeds 41°–104°F; the relative humidity range exceeds 20%–95% (non-condensing); or the environment is subject to vibration, shocks, or bumps.

Electrical Installation

Place this machine near an existing power source. Make sure all power cords are protected from traffic, material handling, moisture, chemicals, or other hazards. Make sure to leave enough space around machine to disconnect power supply or apply a lockout/tagout device, if required.

Lighting

Lighting around the machine must be adequate enough that operations can be performed safely. Shadows, glare, or strobe effects that may distract or impede the operator must be eliminated.

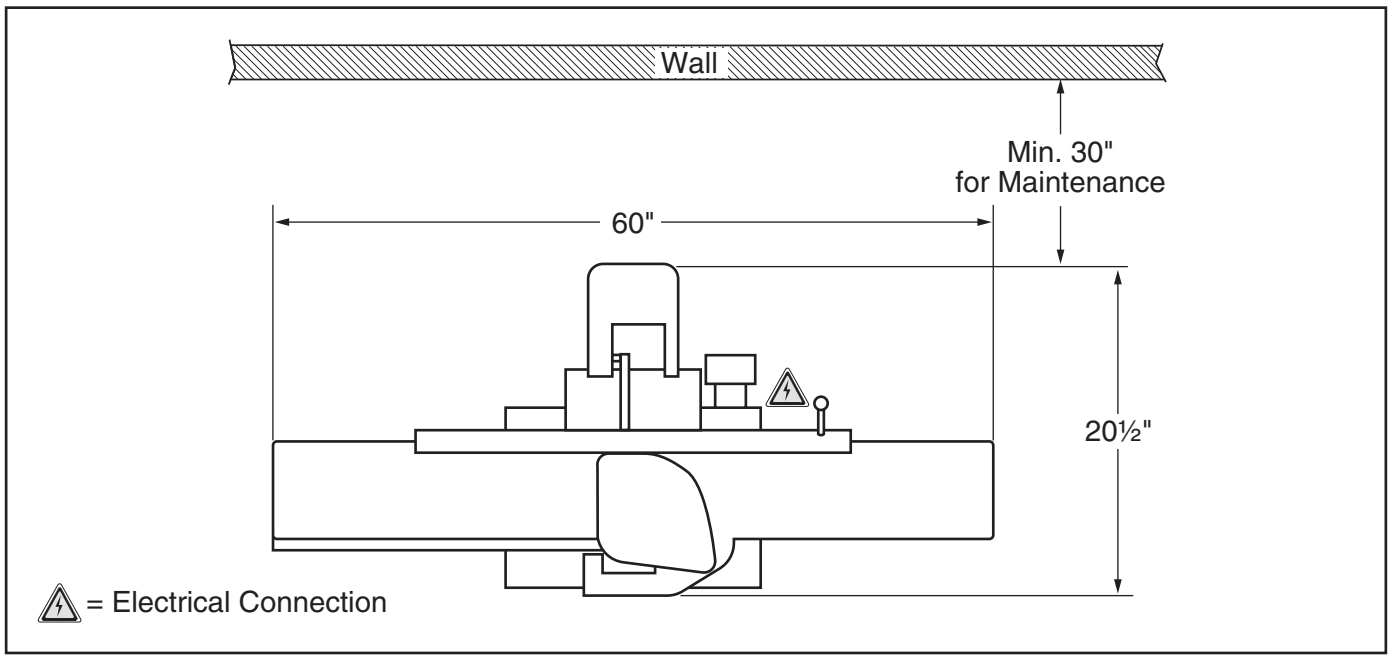

Figure 8. Minimum working clearances.

Assembly

The machine must be fully assembled before it can be operated. Before beginning the assembly process, refer to **Needed for Setup** and gather all listed items. To ensure the assembly process goes smoothly, first clean any parts that are covered or coated in heavy-duty rust preventative (if applicable).

To assemble machine:

1. Turn stand upside down and place top on flat surface.

2. Attach foot pedal caster assembly to side of mobile base chassis with leveling feet, using (2) ⅜"-16 x 2½" hex bolts, (4) ⅜" flat washers, (2) ⅜"-16 hex nuts, and (1) 5⁄16"-18 x 2" hex bolt and (1) 5⁄16" flat washer (see **Figure 9**).

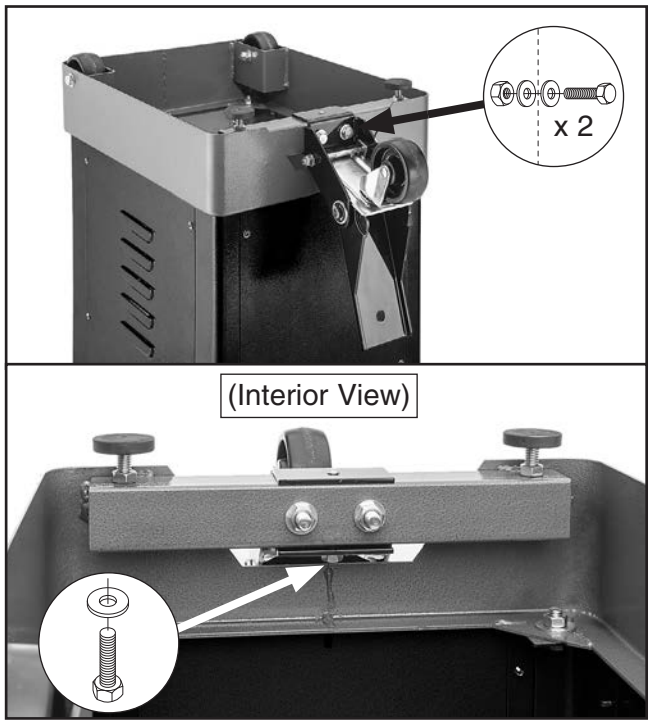

Figure 9. Pedal assembly attached to right side of stand.

3. Place stand in upright position and adjust leveling feet as needed with hex nuts so stand rests level and stable on floor.

4. Remove rear panel to access mounting holes in stand during next step.

5. With help from another person, place jointer assembly onto stand. Attach assembly to stand with (3) ⅜"-16 x ¾" hex bolts and ⅜" lock washers (see **Figure 10**).

Note: *Reach through dust chute to install fasteners on left side of stand. Ensure cutterhead pulley is positioned above slot in stand.*

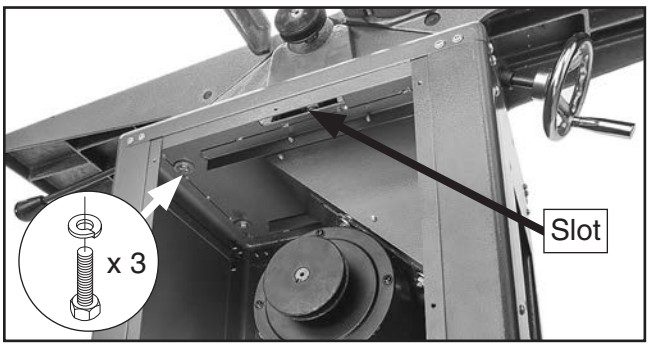

Figure 10. Example of jointer assembly attached to stand.

6. Place straightedge against pulleys to check their alignment (see **Figures 11–12**).

— If pulleys *are* aligned, go to **Step 8**.

— If pulleys *are not* aligned, go to **Step 7**.

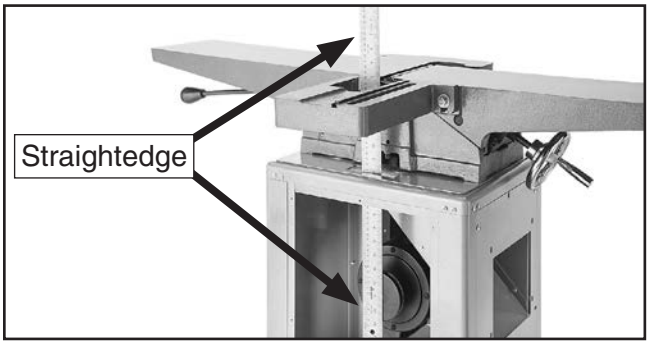

Figure 11. Example of checking pulley alignment.

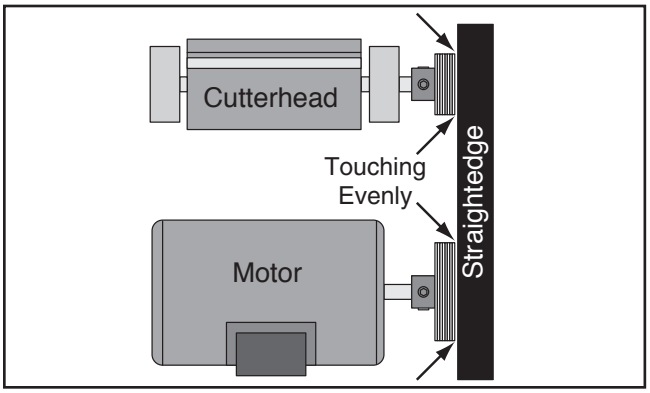

Figure 12. Pulleys correctly aligned.

7. Loosen set screws on cutterhead or motor pulley as needed to align pulleys, then tighten set screws (see **Figure 13**).

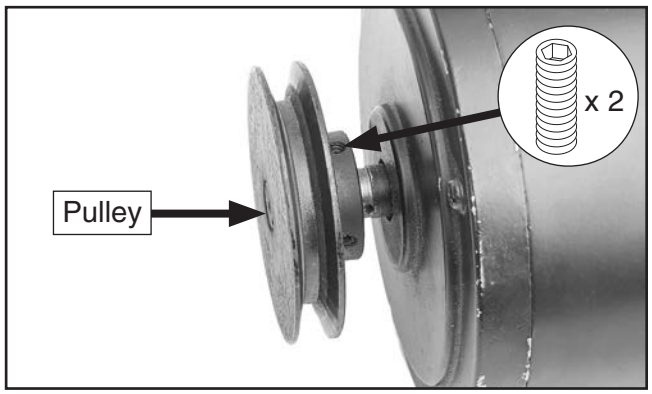

Figure 13. Motor pulley set screw locations.

8. Loosen motor mount hex nuts shown in **Figure 14**, but DO NOT completely remove them.

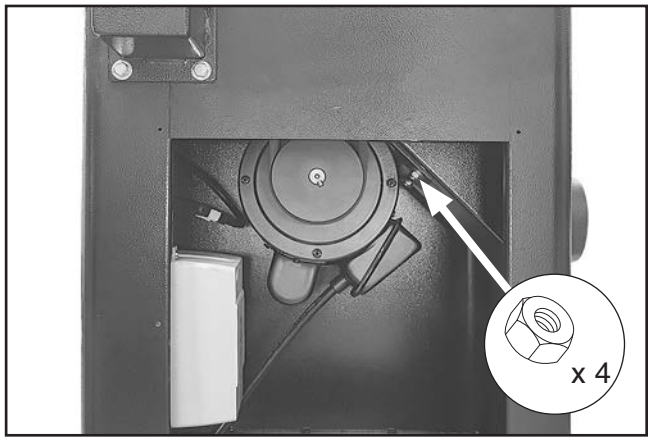

Figure 14. Location of motor mount hex nuts.

9. Slide motor upward, place belt around cutterhead and motor pulleys, then slide motor down to rest on belt (see **Figure 15**).

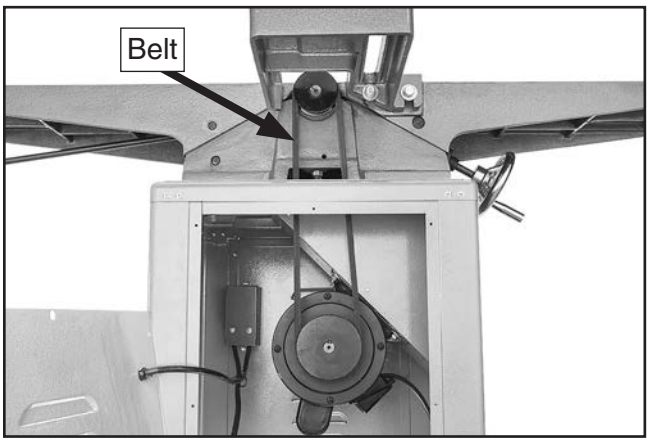

Figure 15. Example of belt installed onto cutterhead and motor pulleys.

10. Adjust belt tension by applying downward pressure on motor until there is approximately ¼" deflection when belt is pushed with moderate force, as shown in **Figure 16**.

Note: *After first 16 hours of operation, check and re-tension belt as it may stretch and seat during this time, causing it to lose initial tension setting.*

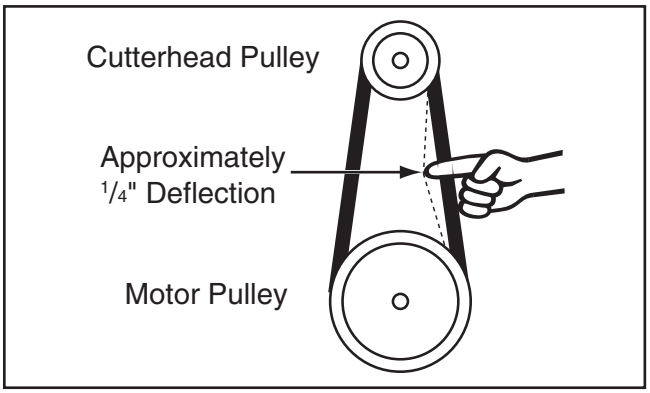

Figure 16. Correct belt deflection when properly tensioned.

11. Tighten motor mount hex nuts (see **Figure 14**) and replace rear panel.

12. Remove ¼"-20 x ½" Phillips head screw and ⅝" flat washer from end of cutterhead guard shaft, loosen set screw in rabbeting table, then slide shaft down through cutterhead guard mounting hole (see **Figure 17**).

— If guard *does* fully seat in hole, proceed to **Step 13**.

— If guard *does not* fully seat in hole, rotate guard until it is fully seated, then proceed to **Step 13**.

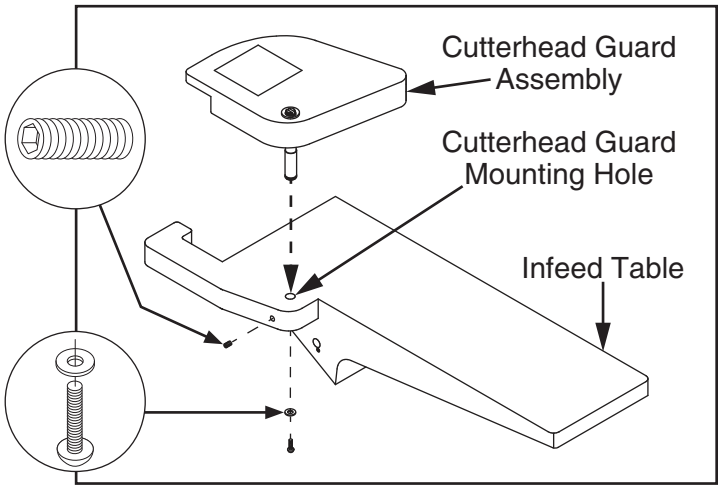

Figure 17. Installing cutterhead guard.

13. Align corner of cutterhead guard with edge of carriage, then secure set screw, ¼"-20 x ½" Phillips head screw, and ⅝" flat washer removed in **Step 12** (see **Figure 18**).

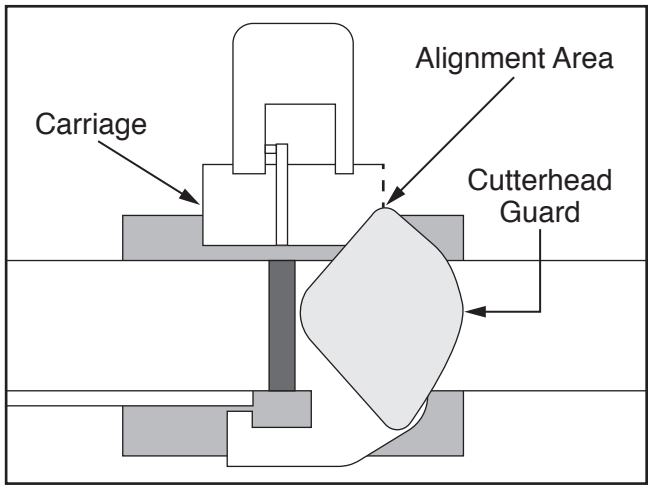

Figure 18. Cutterhead guard aligned with carriage.

14. Rotate cutterhead guard counterclockwise and secure temporarily with a piece of scrap wood (see **Figure 19**).

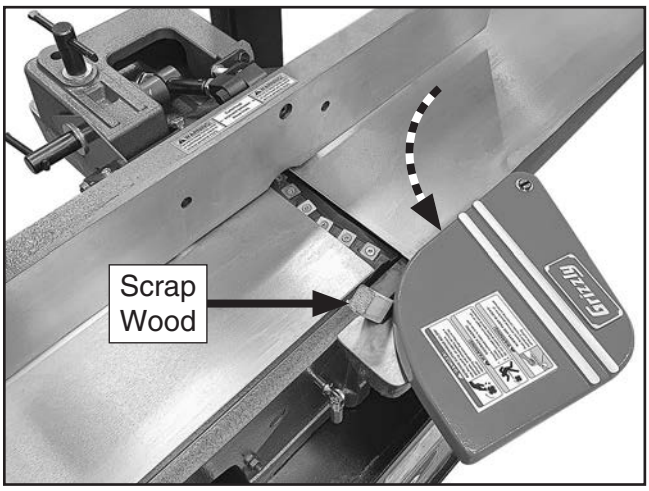

Figure 19. Cutterhead guard secured in place.

15. Place carriage support key and fence onto fence carriage base, making sure fence fits over key (see **Figure 20**), then insert fence lock handle and secure with ½" flat washer and locking jam nut.

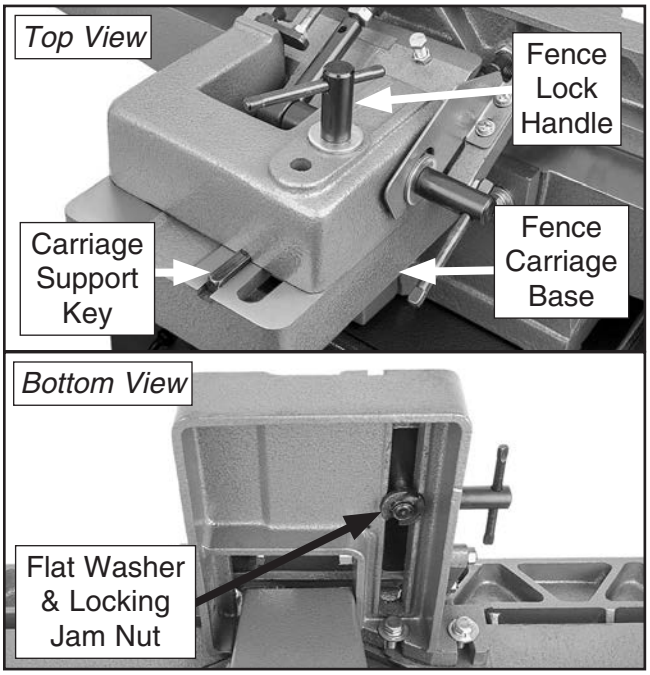

Figure 20. Fence assembly installed onto carriage base and secured.

Note: *There is a small, plastic pin in underside of fence (see **Figure 21**). This pin should slide along table or carriage base to prevent fence from scraping table.*

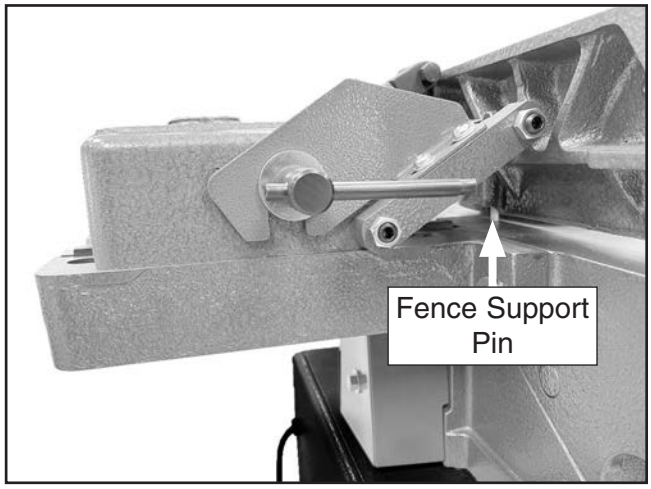

Figure 21. Location of plastic fence support pin.

16. Install fence tilt lever (see **Figure 22**).

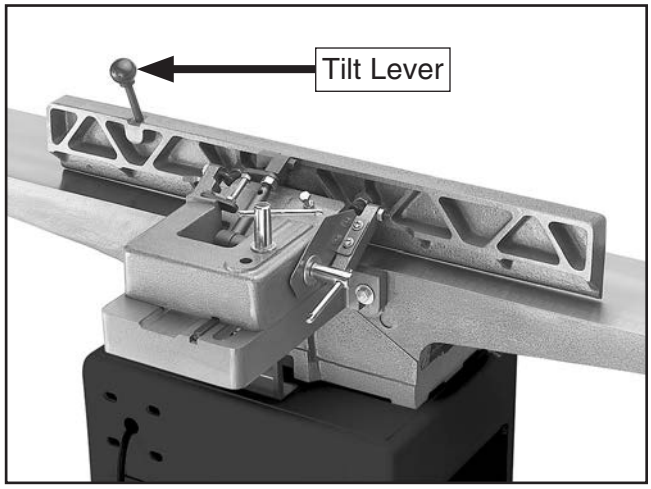

Figure 22. Fence tilt lever installed.

NOTICE

Cutterhead guard must always return to closed position whenever it is moved. If it does not do this, it must be re-adjusted or re-installed.

17. Remove scrap wood installed in **Step 14** and test operation of guard by pulling it back. Guard should spring back over cutterhead and stop against fence.

— If guard *does not* snap back, or snaps back slowly, proceed to **Checking/Adjusting Cutterhead Guard** on **Page 46** before continuing to **Step 18**.

18. Install fixed handles on both handwheels, then install outfeed/infeed table handwheels using (2) 10-24 x ½" pre-installed Phillips head screws and #10 flat washers (see **Figure 23**).

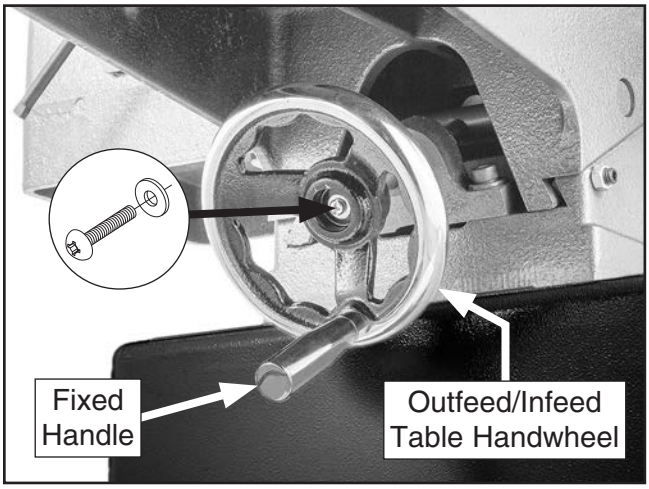

Figure 23. Table handwheel installed.

⚠WARNING

Outfeed table MUST be level with cutterhead inserts when they are at top dead center (at their highest point during rotation). Otherwise, workpiece cannot properly feed past cutterhead, which may cause a kick-back hazard for operator.

19. Verify outfeed table height is set correctly with inserts at top dead center (TDC) (see **Setting Outfeed Table Height** on **Page 39**) and all inserts are securely tightened in cutterhead.

20. Install belt guard with 8-32 x ⅜" hex bolt and 5mm flat washer (see **Figure 24**).

21. Install dust port, as shown in **Figure 24**, using (4) pre-installed flange screws.

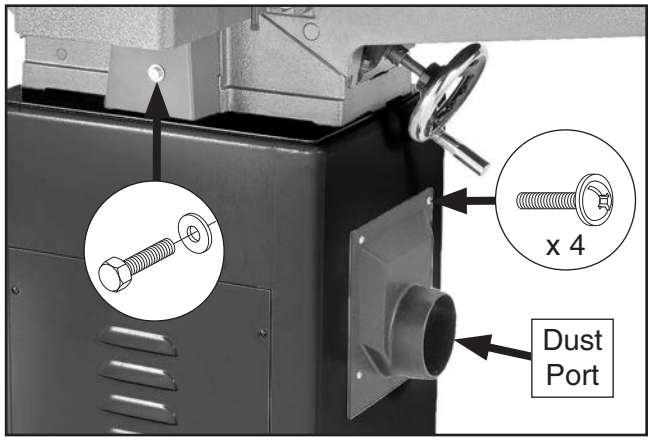

Figure 24. Belt guard and dust port installed.

22. Secure column to stand with (4) 5⁄16"-18 x 1" hex bolts and 5⁄16" flat washers (see).

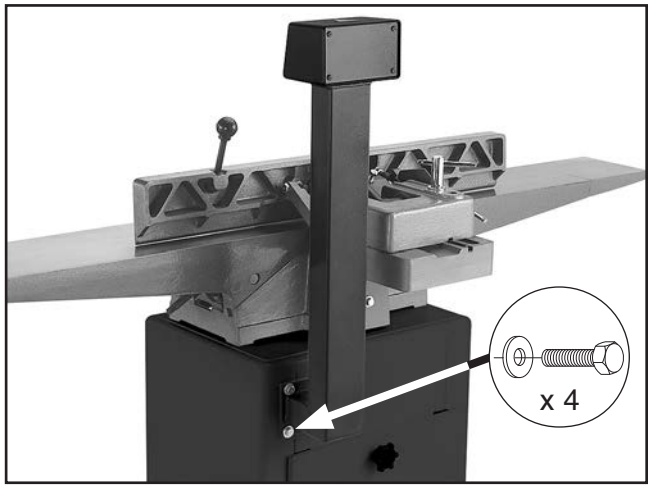

Figure 25. Column installed.

Dust Collection

⚠CAUTION

This machine creates a lot of wood chips/dust during operation. Breathing airborne dust on a regular basis can result in permanent respiratory illness. Reduce your risk by wearing a respirator and capturing the dust with a dust-collection system.

Recommended CFM at Dust Port: 400 CFM
Do not confuse this CFM recommendation with the rating of the dust collector. To determine the CFM at the dust port, you must consider these variables: (1) CFM rating of the dust collector, (2) hose type and length between the dust collector and the machine, (3) number of branches or wyes, and (4) amount of other open lines throughout the system. Explaining how to calculate these variables is beyond the scope of this manual. Consult an expert or purchase a good dust collection "how-to" book.

To connect dust collection hose:

1. Fit 4" dust hose over dust port, as shown in **Figure 26**, and secure with a hose clamp.

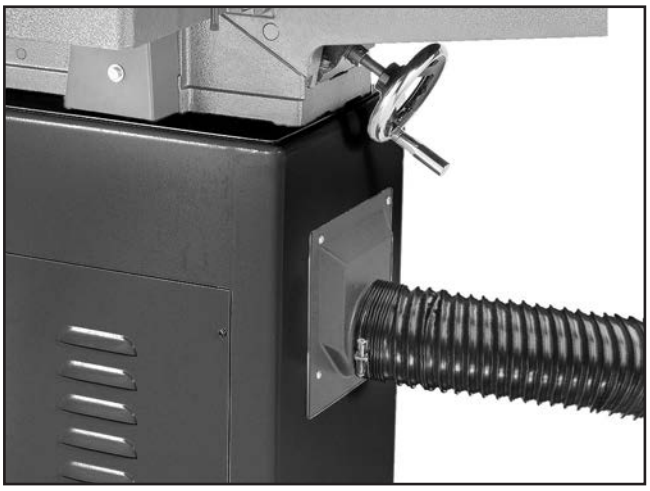

Figure 26. Dust hose attached to dust port.

2. Tug hose to make sure it does not come off.

Note: *A tight fit is necessary for proper performance.*

Test Run

Once assembly is complete, test run the machine to ensure it is properly connected to power and safety components are functioning correctly.

If you find an unusual problem during the test run, immediately stop the machine, disconnect it from power, and fix the problem BEFORE operating the machine again. The **Troubleshooting** table in the **SERVICE** section of this manual can help.

The Test Run consists of verifying the following: 1) The motor powers up and runs correctly, and 2) the OFF button works correctly.

⚠WARNING

Serious personal injury could occur from connecting machine to power before completing the setup process described in this manual. DO NOT connect power until instructed to do so later in this manual.

⚠WARNING

DO NOT start machine until all preceding setup instructions have been performed. Operating an improperly set up machine may result in malfunction or unexpected results that can lead to serious injury, death, or machine/property damage.

To test run machine:

1. Clear all setup tools away from machine.

2. Connect machine to power supply.

3. Press OFF button in, then twist it clockwise so it pops out. OFF button is reset and ready for operation (see **Figure 27**).

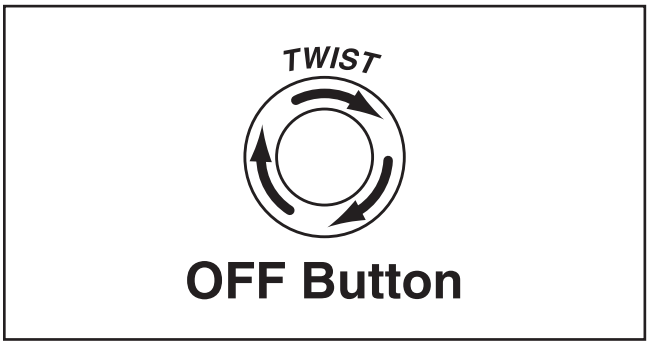

Figure 27. Resetting OFF button.

4. Turn machine ***ON***, verify motor operation, then press OFF button to turn machine ***OFF***. The motor should run smoothly and without unusual problems or noises.

5. WITHOUT resetting OFF button, press ON button. Machine should not start.

   — If machine *does not* start, OFF button safety feature is working correctly. Congratulations! Test run is complete.

   — If machine *does start*, immediately stop machine. OFF button safety feature is not working correctly. This safety feature must work properly before proceeding with operations. Contact Grizzly Tech Support.

Recommended Adjustments

For your convenience, the adjustments listed below have been performed at the factory and no further setup is required to operate your machine. However, because of the many variables involved with shipping, we recommend that you at least verify the following adjustments to ensure the best possible results from your new machine.

Step-by-step instructions for these adjustments can be found in **SECTION 7: SERVICE**.

Factory adjustments that should be verified:

- Cutterhead Inserts (**Page 38**).
- Depth Scale Calibration (**Page 40**).
- Fence Stop Accuracy (**Page 42**).
- Table Parallelism (**Page 45**).

SECTION 4: OPERATIONS

Operation Overview

The purpose of this overview is to provide the novice machine operator with a basic understanding of how the machine is used during operation, so the machine controls/components discussed later in this manual are easier to understand.

Due to the generic nature of this overview, it is **not** intended to be an instructional guide. To learn more about specific operations, read this entire manual, seek additional training from experienced machine operators, and do additional research outside of this manual by reading "how-to" books, trade magazines, or websites.

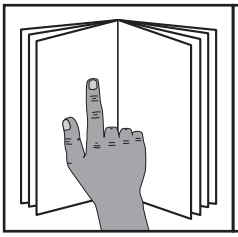

⚠WARNING

To reduce your risk of serious injury, read this entire manual BEFORE using machine.

⚠WARNING

Eye injuries, respiratory problems, or hearing loss can occur while operating this tool. Wear personal protective equipment to reduce your risk from these hazards.

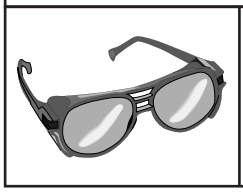

NOTICE

If you are not experienced with this type of machine, WE STRONGLY RECOMMEND that you seek additional training outside of this manual. Read books/magazines or get formal training before beginning any projects. Regardless of the content in this section, Grizzly Industrial will not be held liable for accidents caused by lack of training.

To complete a typical operation, the operator does the following:

1. Examines workpiece to verify it is safe and suitable for jointing.
2. Adjusts fence for width of workpiece and locks it in place.
3. Adjusts fence tilt, if necessary.
4. Adjusts infeed table height to set depth of cut per pass.
5. Ensures cutterhead guard position and operation are functioning properly.
6. Puts on safety glasses, respirator, and any other required protective equipment.
7. Starts dust collection and jointer.
8. Using push blocks as needed, holds workpiece firmly against infeed table and fence, and feeds workpiece into cutterhead at a steady and controlled rate until entire length of workpiece has been cut and it clears the cutterhead on the outfeed table side.
9. Repeats cutting process described above until desired results are achieved.
10. Stops jointer and dust collection.

Stock Inspection & Requirements

Follow these rules when choosing and jointing stock:

- **DO NOT joint or surface plane stock that contains large or loose knots.** Injury to the operator or damage to the workpiece can occur if a knot becomes dislodged during the cutting operation.

- **DO NOT joint or surface plane against the grain direction.** Cutting against the grain increases the likelihood of kickback, as well as tear-out on the workpiece.

- **Jointing and surface planing with the grain produces a better finish and is safer for the operator.** Cutting with the grain is described as feeding the stock on the jointer so the grain points down and toward you as viewed on the edge of the stock (see **Figure** below).

  Note: *If the grain changes direction along the edge of the board, decrease the cutting depth and make additional passes.*

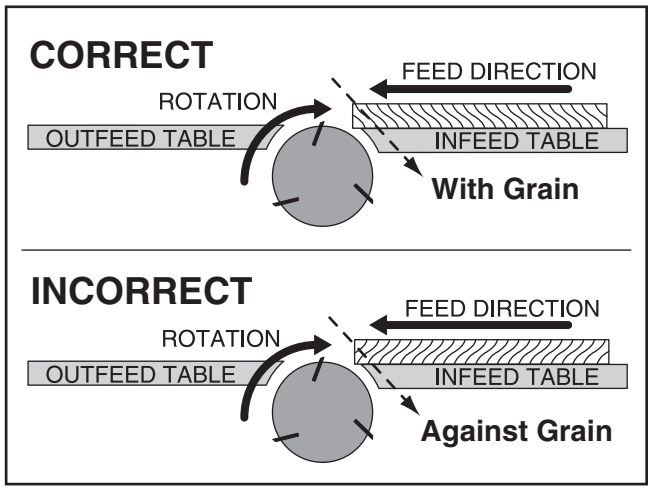

Figure 28. Proper grain alignment.

- **Only cut natural wood.** This jointer is only designed for cutting natural wood stock. Never use it to cut MDF, particle board, plywood, laminates, drywall, backer board, metals, glass, stone, tile, products with lead-based paint, or products that contain asbestos. Cutting these may lead to injury or machine damage.

- **Scrape all glue off the workpiece before jointing.** Glue deposits on the workpiece, hard or soft, will gum up the cutterhead and produce poor results.

- **Remove foreign objects from the workpiece.** Make sure that any stock you process with the jointer is clean and free of dirt, nails, staples, tiny rocks or any other foreign objects that could damage the cutterhead. These particles could also cause a spark as they strike the cutterhead and create a fire hazard.

  IMPORTANT: Wood stacked on a concrete or dirt surface can have small pieces of concrete or stone pressed into the surface.

- **Make sure all stock is sufficiently dried before jointing.** Wood with a moisture content over 20% will cause unnecessary wear on the cutters and poor cutting results. Excess moisture can also hasten rust and corrosion.

⚠WARNING

Make sure your workpiece exceeds the minimum dimension requirements shown below before processing it through the jointer, or the workpiece may break or kick back during the operation.

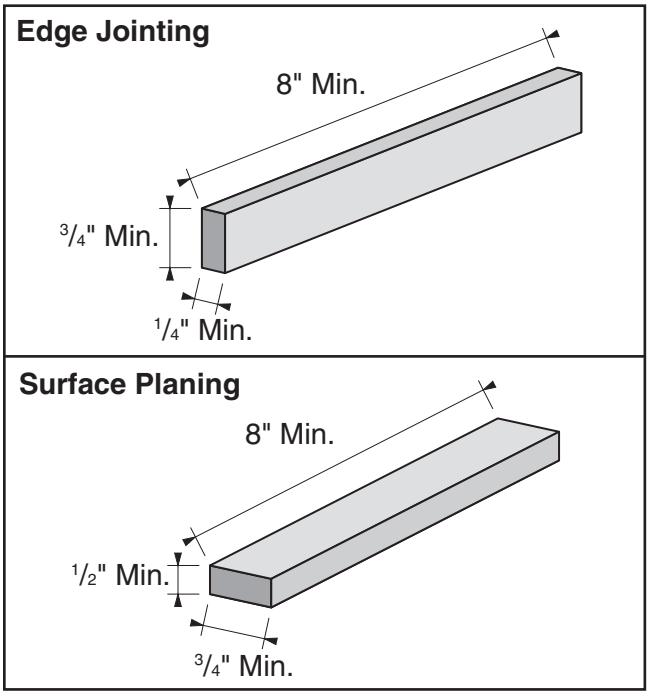

Figure 29. Minimum stock dimensions for jointer.

Setting Depth of Cut

The depth of cut on a jointer is the amount of material removed from the bottom of the workpiece as it passes over the cutterhead.

The depth of cut is set by adjusting the height of the infeed table relative to the cutterhead inserts at TDC (top dead center).

⚠CAUTION

DO NOT exceed 1/8" depth of cut per pass when edge jointing and 1/16" depth of cut per pass when surface planing on this machine or kickback and serious injury may occur!

Adjusting Infeed Table Height

To adjust the infeed table height, loosen the infeed table lock, adjust the infeed table handwheel, then tighten the lock to secure the setting (see **Figure 30**).

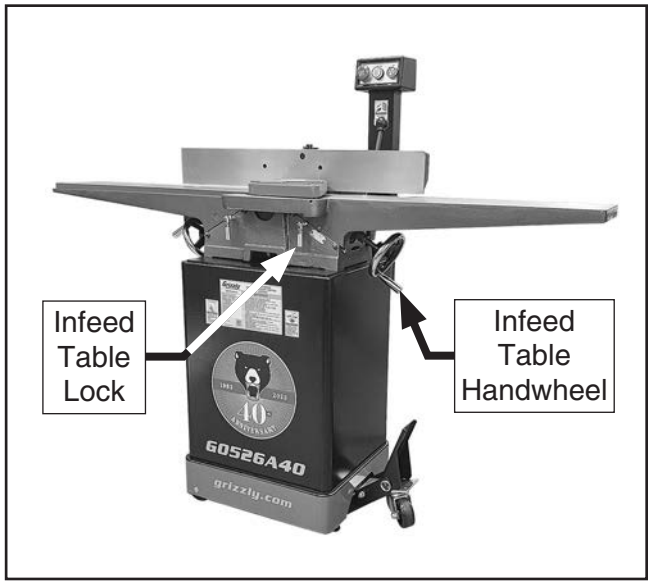

Figure 30. Infeed table controls.

Depth-of-Cut Scale

The depth of cut can be referenced directly from the depth scale located on the front of the jointer (see **Figures 31–32**).

Note: *The depth scale can be calibrated or "zeroed" if it is not correct. Refer to* ***Calibrating Depth Scale*** *on* ***Page 40*** *for more information.*

Figure 31. Location of depth-of-cut scale.

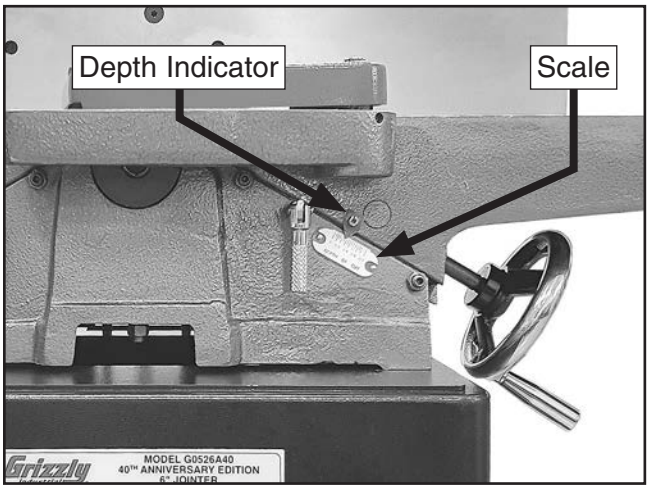

Figure 32. Depth-of-cut components location.

Squaring Stock

Squaring stock involves four steps performed in the order below:

1. **Surface Plane on Jointer**—Concave face of workpiece is surface planed flat with jointer.

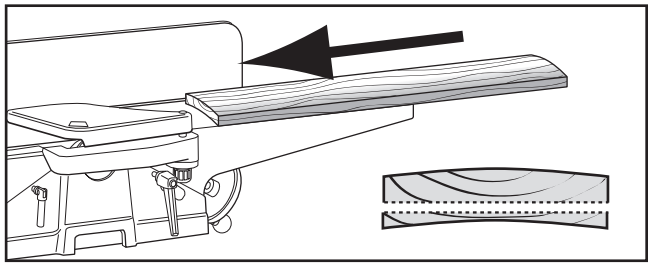

2. **Surface Plane on a Thickness Planer**—Opposite face of workpiece is surface planed flat with a thickness planer.

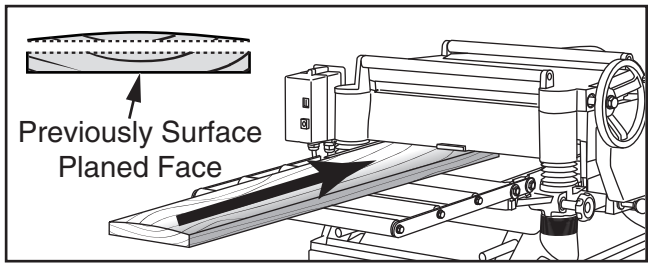

3. **Edge Joint on Jointer**—Concave edge of workpiece is jointed flat with jointer.

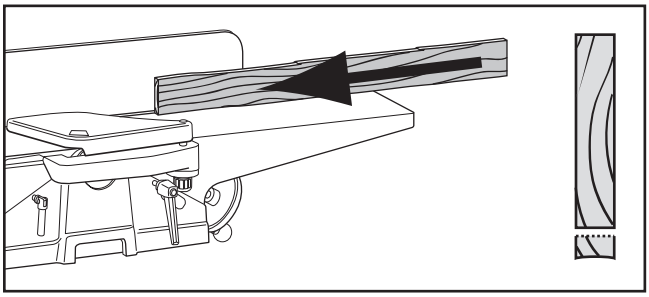

4. **Rip Cut on a Table Saw**—Jointed edge of workpiece is placed against a table saw fence and opposite edge cut off.

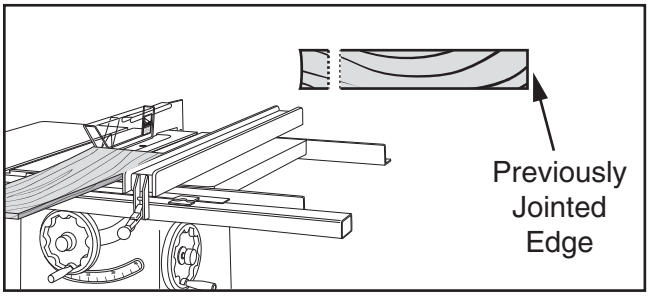

Surface Planing

The purpose of surface planing (see example **Figures** below) on the jointer is to make one flat face on a piece of stock to prepare it for thickness planing on a planer.

⚠WARNING

Failure to use push blocks when surface planing could result in your hands contacting rotating cutterhead, which will cause serious personal injury. ALWAYS use push blocks when surface planing on jointer!

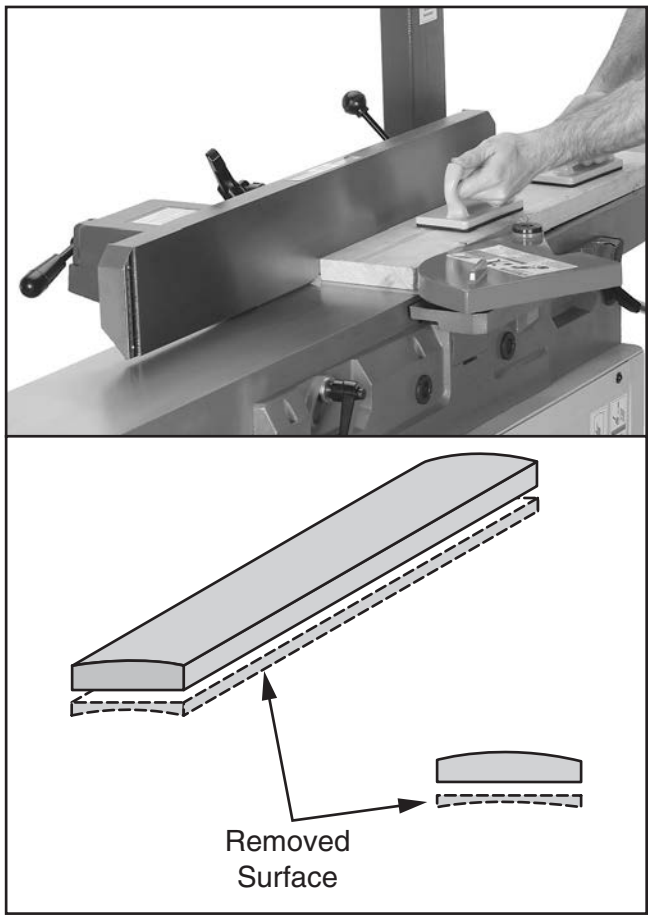

Figure 33. Example of surface planing operation.

To surface plane on jointer:

1. Inspect stock to ensure it is safe and suitable for the operation (see **Stock Inspection & Requirements** section).

2. Set infeed table height to desired cutting depth for each pass.

   ⚠ **CAUTION:** To minimize risk of kickback, do not exceed a cutting depth of 1/16" per pass when surface planing.

3. Set fence to 90°.

4. Start jointer.

5. Place workpiece firmly against fence and infeed table.

   ⚠ **CAUTION:** To ensure workpiece remains stable during cut, concave sides of workpiece must face toward table and fence.

6. Feed workpiece completely across cutterhead while keeping it firmly against fence and tables during the entire cut.

   ⚠ **CAUTION:** Keep hands at least 4" away from cutterhead during the entire cut. Instead of allowing a hand to pass directly over cutterhead, lift it up and over cutterhead, and safely reposition it on the outfeed side to continue supporting workpiece. Use push blocks whenever practical to further reduce risk of accidental hand contact with cutterhead.

7. Repeat **Step 6** until entire surface is flat.

   Tip: *When squaring up stock, cut opposite side of workpiece with a planer instead of the jointer to ensure boths sides are parallel.*

Edge Jointing

Edge jointing (see example **Figures** below) produces a flat and true surface along the side of a workpiece by removing uneven areas. It is an essential step for squaring up warped or rough stock and when preparing a workpiece for joinery or finishing.

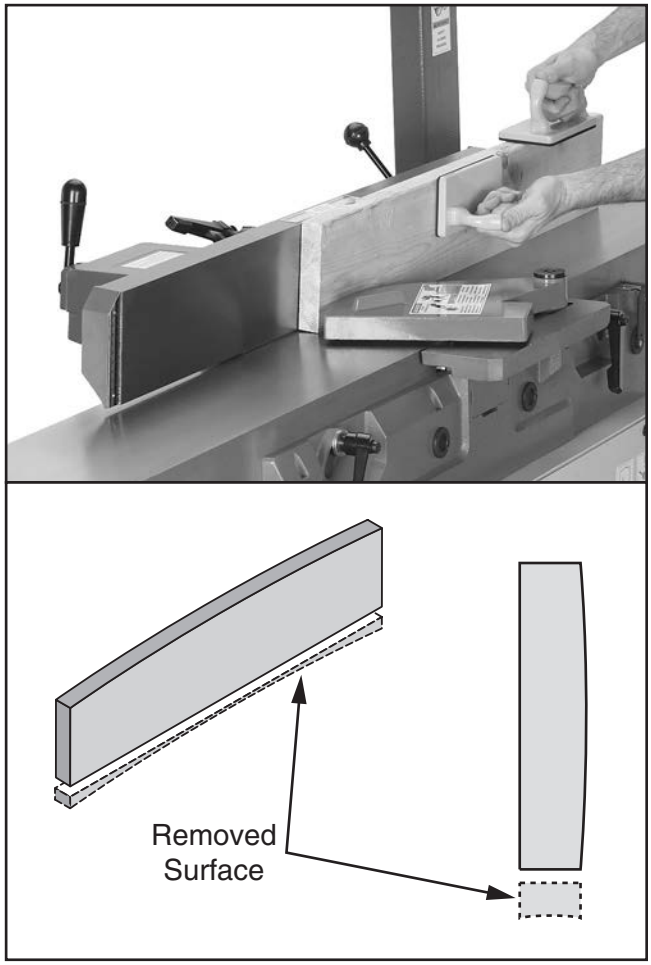

Figure 34. Example of edge jointing operation.

To edge joint on jointer:

1. Inspect stock to ensure it is safe and suitable for the operation (see **Stock Inspection & Requirements** section).

2. Surface plane workpiece (see **Surface Planing** section).

3. Set infeed table height to desired cutting depth for each pass.

   ⚠ **CAUTION:** To minimize risk of kickback, do not exceed a cutting depth of ⅛" per pass.

4. Set fence to 90°.

5. Start jointer.

6. Place workpiece firmly against fence and infeed table with concave side facing down.

   ⚠ **CAUTION:** To ensure workpiece remains stable during cut, concave sides of workpiece must face toward table and fence.

7. Feed workpiece completely across cutterhead while keeping it firmly against fence and tables during the entire cut.

   ⚠ **CAUTION:** Keep hands at least 4" away from cutterhead during the entire cut. Instead of allowing a hand to pass directly over cutterhead, lift it up and over cutterhead, and safely reposition it on the outfeed side to continue supporting workpiece. Use push blocks whenever practical to further reduce risk of accidental hand contact with cutterhead.

8. Repeat **Step 6** until the entire edge is flat.

   Tip: *When squaring up stock, cut opposite edge of workpiece with a table saw instead of the jointer—otherwise, both edges of workpiece will not be parallel with each other.*

Bevel Cutting

Bevel cuts (see example **Figures** below) can be made by setting the fence at the desired angle and feeding the workpiece firmly along the fence face, with the bottom inside corner firmly against the table. The cutting process typically requires multiple passes or cuts to bevel the entire edge of a workpiece.

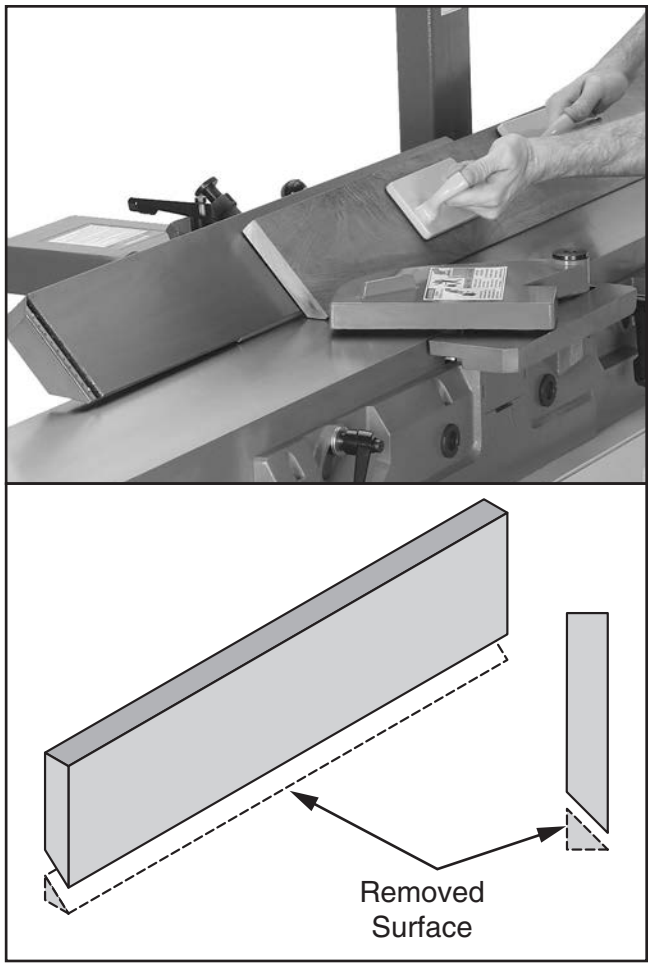

Figure 35. Example of fence setup for bevel cut of 45°.

To bevel cut on jointer:

1. Inspect stock to ensure it is safe and suitable for the operation (see **Stock Inspection & Requirements** section).

2. Surface plane workpiece (see **Surface Planing** section).

3. Edge joint workpiece (see **Edge Jointing** section).

4. Set infeed table height to cutting depth desired for each pass.

   ⚠ **CAUTION:** Cutting depth for bevel cuts is typically between 1/16" and 1/8", depending on hardness and width of stock.

5. Set fence tilt to desired angle of cut.

6. Place workpiece against fence and infeed table with concave side face down.

7. Start jointer.

8. With a push block in your leading hand, press workpiece against table and fence with firm pressure, and feed workpiece over cutterhead with a push block in your trailing hand.

   ⚠ **CAUTION:** When your leading hand gets within 4" of the cutterhead, lift it up and over cutterhead, and place push block on portion of the workpiece once it is 4" past cutterhead. Now, focus your pressure on outfeed end of the workpiece while feeding, and repeat same action with your trailing hand when it gets within 4" of cutterhead. To help keep your hands safe, DO NOT let them get closer than 4" from moving cutterhead at any time during operation!

9. Repeat cutting process, as necessary, until you are satisfied with the results.

Rabbet Cutting

A rabbet cut removes a portion of a workpiece edge, so it fits together with an opposing, equally sized rabbet cut on another workpiece (see example **Figure** below). This is a classic method of joining two workpieces that is simple, yet strong.

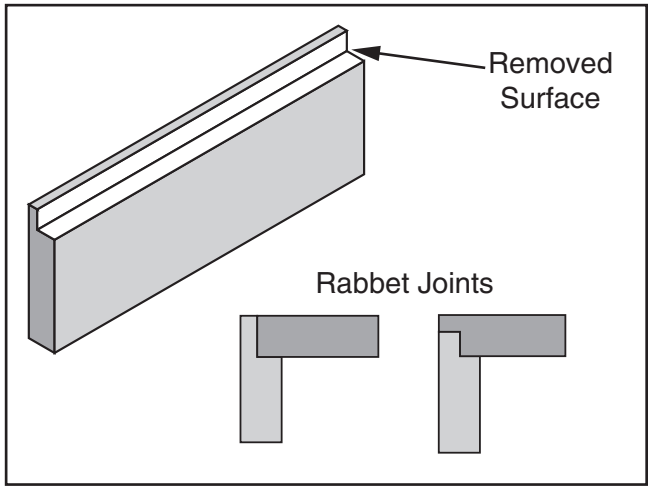

This jointer can be used to make high-quality rabbet cuts, but there are some situations—whether it is due to an excessively large/small workpiece size or rabbet cutting width/depth—when it will not be safe or appropriate for making the rabbet cut on this jointer. In these cases, you need to use another tool or method for rabbet cutting that will be a safer alternative.

A rabbet cut can alternatively be made using a table saw, router, or even a hand saw. As with any type of cutting operation, always consider your safety first and use good judgement!

Typically, rabbet cutting with a jointer requires the cutterhead guard to be removed first, so the workpiece can slide along the rabbeting ledge during the cut. However, it is possible to make rabbet cuts with workpieces up to 1" thick without removing the cutterhead guard. This is done by performing the rabbet cut with the workpiece on end (similar to when you are edge jointing).

To rabbet cut on jointer:

1. Inspect stock to ensure it is safe and suitable for the operation (see **Stock Inspection & Requirements** section).

2. Set infeed table height to desired cutting depth for each pass.

   ⚠**CAUTION:** For safety reasons, cutting depth should never exceed 1/8" per pass.

3. Remove cutterhead guard if necessary to perform operation (see **Figure 36**).

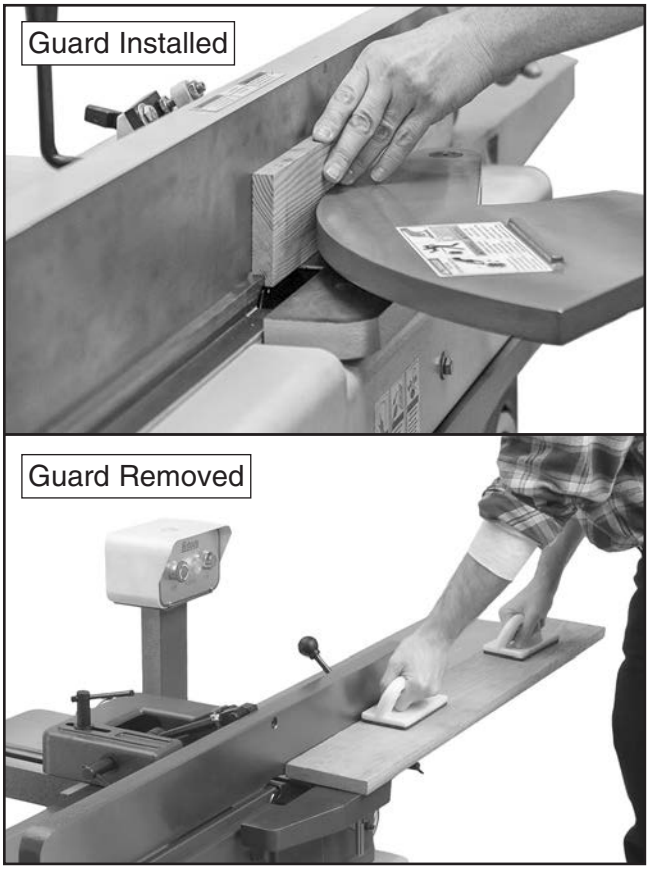

Figure 36. Examples of typical rabbet cutting operations.

⚠WARNING

When cutterhead guard is removed, attempting any other cut besides a rabbet directly exposes operator to moving cutterhead. To minimize risk of injury and unnecessary exposure to cutterhead, always keep cutterhead guard installed when possible, and ALWAYS immediately replace it after performing rabbet cuts.

4. Set fence to 90° and near front of jointer, so amount of exposed cutterhead in front of fence matches size of desired rabbet.

5. Start jointer.

6. Place workpiece firmly against fence and infeed table.

⚠CAUTION: To ensure workpiece remains stable during cut, concave sides of workpiece must face toward table and fence.

7. Feed workpiece completely across cutterhead while keeping it firmly against fence and tables during entire cut.

⚠CAUTION: Keep hands at least 4" away from cutterhead during the entire cut. Instead of allowing a hand to pass directly over cutterhead, lift it up and over cutterhead, and safely reposition it on the outfeed side to continue supporting workpiece. Use push blocks whenever practical to further reduce risk of accidental hand contact with cutterhead.

8. Repeat **Step 7** until rabbet is cut to depth.

9. Re-install cutterhead guard if removed in **Step 3**.

SECTION 5: ACCESSORIES

⚠WARNING

Installing unapproved accessories may cause machine to malfunction, resulting in serious personal injury or machine damage. To reduce this risk, only install accessories recommended for this machine by Grizzly.

NOTICE

Refer to our website or latest catalog for additional recommended accessories.

G1028Z2—1½ HP Portable Dust Collector

- Motor: 1½ HP
- Air suction capacity: 1300 CFM
- Max Static Pressure: 9"
- Inlet: 6" diameter with 4" "Y" adapter
- Impeller: 12¾" Cast aluminum
- Bag capacity: 5.7 Cubic feet
- Portable base size: 21½" x 33½"
- Bag Size: 19½" x 33"
- CSA Certified

Figure 37. G1028Z2 1½ HP Portable Dust Collector.

Basic Eye Protection

T32323—Woodturners Face Shield
T32401—EDGE Brazeau Safety Glasses, Clear
T32402—EDGE Khor G2 Safety Glasses, Tint
T32404—EDGE Mazeno Safety Glasses, Clear

Figure 38. Assortment of basic eye protection.

T24736—Carbide Inserts (10 Pack)
These indexable carbide inserts can be rotated to provide four factory sharp edges before replacement. Inserts measure 15 x 15 x 2.5mm.

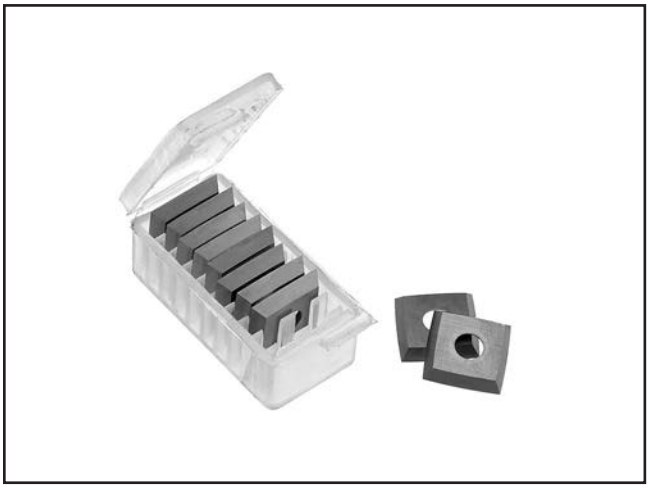

Figure 39. Replacement carbide inserts for Model G0526A40.

SECTION 6: MAINTENANCE

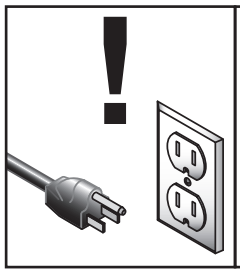

WARNING

To reduce risk of shock or accidental startup, always disconnect machine from power before adjustments, maintenance, or service.

Schedule

For optimum performance from this machine, this maintenance schedule must be strictly followed.

Ongoing
To minimize your risk of injury and maintain proper machine operation, shut down the machine immediately if you ever observe any of the items below, and fix the problem before continuing operations:

- Loose mounting bolts.
- Dust or debris on and around machine.
- Dull or damaged cutterhead inserts.
- Unprotected cast-iron surfaces.
- Worn or damaged wires.
- Any other unsafe condition.

Monthly Check
- V-belt tension, damage, or wear (**Page 43**).
- Clean/vacuum dust buildup from inside cabinet and off motor.

Cleaning & Protecting

The cleaning process for this machine is simple. Vacuum excess wood chips and sawdust, and wipe off the remaining dust with a dry cloth. If any resin has built up, use a resin dissolving cleaner to remove it. Treat all unpainted cast iron and steel with a non-staining lubricant after cleaning.

Protect the unpainted cast iron surfaces on the table by wiping the table clean after every use—this ensures moisture from wood dust does not remain on bare metal surfaces.

Keep tables rust-free with regular applications of quality lubricants.

Recommended Metal Protectants

G5562—SLIPIT® 1 Qt. Gel
G5563—SLIPIT® 11 Oz. Spray

Figure 40. Recommended products for protecting unpainted cast-iron and steel.

Lubrication

Since all bearings are sealed and permanently lubricated, simply leave them alone until they need to be replaced. DO NOT lubricate them.

It is essential to clean components before lubricating them because dust and chips build up on lubricated components and make them hard to move. Simply adding more grease to them will not yield smooth moving components.

Clean the components below with mineral spirits or other oil/grease solvent cleaner and shop rags.

SB1365—South Bend Way Oil-ISO 68

Figure 41. Recommended product for machine lubrication.

Infeed/Outfeed Table Leadscrews

Oil Type ..... SB1365 or ISO 68 Equivalent
Oil Amount..... Thin Coat
Frequency..... As Needed

Lubricate the outfeed table leadscrew with light machine oil as needed (see **Figure 42**). Wipe off excess oil and sawdust with a cloth.

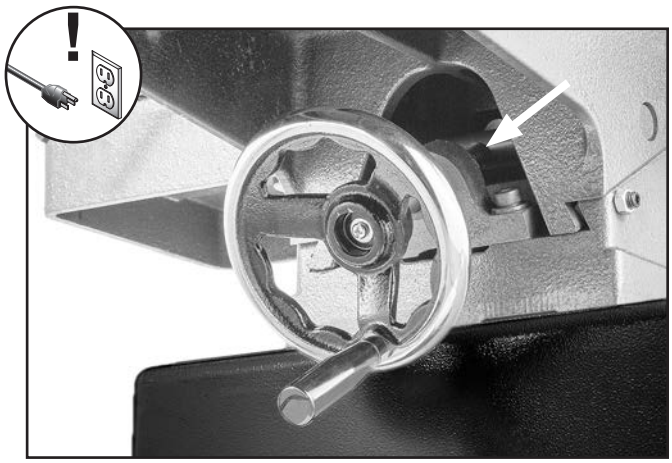

Figure 42. Leadscrew lubrication location.

Table Ways

Oil Type ..... SB1365 or ISO 68 Equivalent
Oil Amount..... 1–2 Drops
Lubrication Frequency..... As Needed

Lower infeed and outfeed tables to access ways. Place a couple of drops of oil at top of each way, at both front and rear of machine, and move tables up and down to distribute oil (see **Figure 43**). Wipe off excess oil.

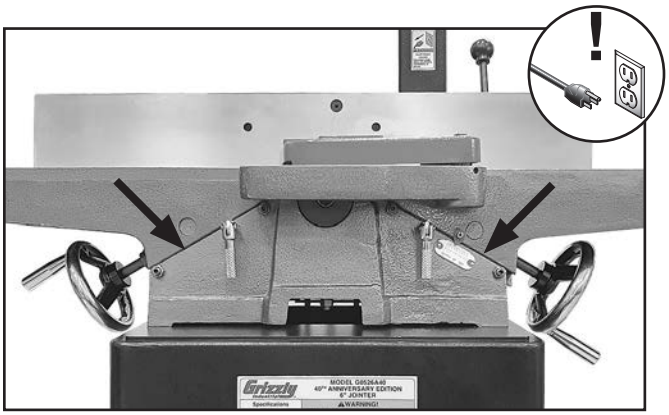

Figure 43. Location to lubricate table ways.

Fence

Oil Type ..... SB1365 or ISO 68 Equivalent
Oil Amount..... 1–2 Drops
Lubrication Frequency..... As Needed

Place one or two drops of light machine oil on fence pivot points (see **Figure 44**) as needed.

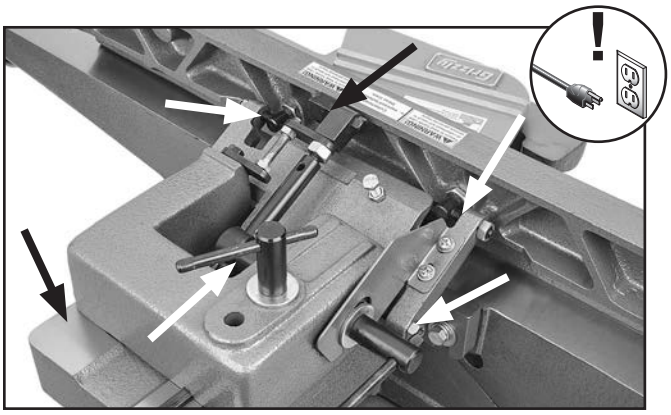

Figure 44. Fence lubrication locations.

SECTION 7: SERVICE

Review the troubleshooting procedures in this section if a problem develops with your machine. If you need replacement parts or additional help with a procedure, call our Technical Support. **Note:** *Please gather the serial number and manufacture date of your machine before calling.*

Troubleshooting

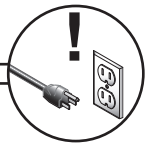

Motor & Electrical

Symptom	Possible Cause	Possible Solution
Machine does not start, or power supply breaker immediately trips after startup.	1. OFF button depressed/at fault. 2. Incorrect power supply voltage or circuit size. 3. Power supply circuit breaker tripped or fuse blown. 4. Motor wires connected incorrectly. 5. Thermal overload relay has tripped/at fault. 6. Start capacitor at fault. 7. Centrifugal switch adjustment/contact points at fault. 8. Contactor not energized/at fault. 9. Wiring broken, disconnected, or corroded. 10. ON button at fault. 11. Motor or motor bearings at fault.	1. Rotate OFF button head to reset. Replace if at fault. 2. Ensure correct power supply voltage and circuit size. 3. Ensure circuit is free of shorts. Reset circuit breaker or replace fuse. 4. Correct motor wiring connections (**Page 49**). 5. Reset. Adjust or replace if at fault. 6. Test/replace if at fault. 7. Adjust centrifugal switch/clean contact points. Replace either if at fault. 8. Test all legs for power; replace if necessary. 9. Fix broken wires or disconnected/corroded connections. 10. Replace button. 11. Replace motor.
Machine stalls or is underpowered.	1. Workpiece material unsuitable for machine. 2. Feed rate/cutting speed too fast. 3. Workpiece crooked; fence loose or misadjusted. 4. Belt slipping/pulleys misaligned. 5. Motor wires connected incorrectly. 6. Pulley/sprocket slipping on shaft. 7. Machine undersized for task. 8. Motor overheated. 9. Extension cord too long. 10. Contactor not energized/at fault. 11. Centrifugal switch/contact points at fault. 12. Motor or motor bearings at fault.	1. Only cut wood/ensure moisture is below 20% (**Page 24**). 2. Decrease feed rate/cutting speed. 3. Straighten or replace workpiece/adjust fence (**Page 25**). 4. Clean/tension/replace belt (**Page 43**); ensure pulleys are aligned (**Page 44**). 5. Correct motor wiring connections. 6. Tighten/replace loose pulley/shaft (**Page 44**). 7. Use sharp inserts; reduce feed rate/depth of cut (**Page 25**). 8. Clean motor, let cool, and reduce workload. 9. Move machine closer to power supply; use shorter extension cord (**Page 12**). 10. Test all legs for power; repair/replace if at fault. 11. Adjust centrifugal switch/clean contact points. Replace either if at fault. 12. Replace motor.

Motor & Electrical (Cont.)

Symptom	Possible Cause	Possible Solution
Machine has vibration or noisy operation.	1. Motor or component loose. 2. Mobile stand feet not adjusted properly. 3. V-belt worn, loose, pulleys misaligned or belt slapping cover. 4. Insert(s) at fault. 5. Pulley loose. 6. Motor mount loose/broken. 7. Motor fan rubbing on fan cover. 8. Cutterhead bearings at fault. 9. Centrifugal switch needs adjustment/at fault. 10. Motor bearings at fault.	1. Replace damaged or missing bolts/nuts; tighten if loose. 2. Adjust mobile stand feet to stabilize machine (**Page 17**). 3. Inspect/replace belt (**Page 43**). Re-align pulleys if necessary (**Page 44**). 4. Rotate/replace insert(s) (**Page 38**). 5. Secure pulley on shaft (**Page 44**). 6. Tighten/replace. 7. Fix/replace fan cover; replace loose/damaged fan. 8. Replace bearing(s)/re-align cutterhead. 9. Adjust/replace if at fault. 10. Test by rotating shaft; rotational grinding/loose shaft requires bearing replacement.

Operation(s)

Symptom	Possible Cause	Possible Solution
Table(s) hard to adjust.	1. Table lock(s) engaged/partially engaged. 2. Infeed table lock handle blocking upward movement.	1. Completely loosen table lock(s) (**Page 4**). 2. Loosen/reset infeed table lock handle (**Page 39**).
Excessive snipe (gouge in end of board that is uneven with rest of cut); back of workpiece is concave.	1. Outfeed table set too low. 2. Operator pushing down on trailing end (infeed side) of workpiece as it leaves cutterhead.	1. Align outfeed table with cutterhead inserts at top dead center (**Page 39**). 2. Focus most of the workpiece pressure against outfeed table while cutting.
Workpiece stops in middle of cut; front of workpiece is concave.	1. Outfeed table set too high.	1. Align outfeed table with cutterhead inserts at top dead center (**Page 39**).
Workpiece chipping, tear-out, indentations, or overall rough cuts.	1. Workpiece is rough or has loose knots/surface flaws; not suitable for jointing. 2. Not feeding workpiece to cut "with" the grain. 3. Dull inserts. 4. Nicked or chipped insert(s). 5. Feeding workpiece too fast. 6. Excessive depth of cut. 7. Lack of proper dust collection or clogged dust port.	1. Inspect workpiece. Use smooth stock without loose knots/surface flaws. 2. Flip workpiece 180° before feeding again. 3. Rotate/replace inserts (**Page 38**). 4. Rotate/replace inserts (**Page 38**). 5. Reduce feed rate. 6. Reduce depth of cut (**Page 25**). 7. Clear blockages, ensure dust collection is operating efficiently; upgrade dust collector.

Operation(s) (Cont.)

Symptom	Possible Cause	Possible Solution
Fuzzy grain left in workpiece.	1. Wood has high moisture content. 2. Dull inserts.	1. Ensure wood moisture content is less than 20%. Allow to dry if necessary (**Page 24**). 2. Rotate/replace inserts (**Page 38**).
Long lines or ridges that run along length of workpiece.	1. Nicked or chipped inserts. 2. Loose or incorrectly installed insert(s). 3. Dirt or debris under insert(s).	1. Rotate/replace inserts (**Page 38**). 2. Remove/replace insert(s) and install properly (**Page 38**). 3. Remove insert(s), clean bottom of insert/cutterhead mounting pocket and re-install (**Page 38**).
Uneven cutter marks, wavy surface, or chatter marks across face of workpiece.	1. Feeding workpiece too fast. 2. Insert(s) not properly adjusted or dirt or debris under insert(s).	1. Reduce feed rate. 2. Remove, clean, and re-install any inserts that are "raised" in cutterhead (**Page 38**).
Glossy surface; scorching or burn marks on workpiece.	1. Dull inserts. 2. Feed rate too slow.	1. Rotate/replace inserts (**Page 38**). 2. Increase feed rate.
Workpiece is concave or convex along its length after jointing.	1. Workpiece not held with even pressure against outfeed table during cut. 2. Workpiece too uneven at start of operation. 3. Tables not parallel with cutterhead and each other.	1. Apply even, downward pressure against workpiece throughout entire travel along outfeed side during cut. 2. Take partial cuts to remove extreme high spots before doing a full pass. 3. Verify/adjust table parallelism (**Page 45**).
Workpiece edges not square; tapered cut produced.	1. Fence not square to table(s); fence tilt unlocked. 2. Warped infeed or outfeed table. 3. Insert(s) not adjusted at even heights in cutterhead.	1. Square fence to table(s); lock fence (**Page 42**). 2. Regrind/replace table. 3. Remove, clean, and re-install any inserts that are "raised" in cutterhead (**Page 38**).

Rotating/Replacing Indexable Inserts

The Model G0526A40 V-helical cutterhead is equipped with 4-sided indexable carbide inserts. Each insert can be removed, rotated, and re-installed to use any of its four cutting edges. If one cutting edge becomes dull or damaged, simply rotate it 90° (see **Figure 45**) to use a sharp cutting edge.

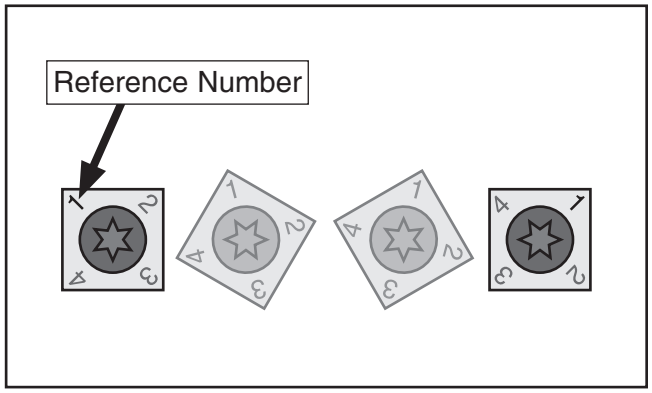

Figure 45. Rotating indexable carbide inserts.

The inserts have a reference number on each corner. The position of the reference number on installed inserts can be used to track which edges are sharp/unused and which edges are dull or damaged. Replace inserts once reference number has been rotated back to its original position.

Item(s) Needed

- Heavy Leather Gloves ..... 1 Pair
- Safety Glasses (per person) 1
- Flat Hd Torx Screws
  T20 M6-1 x 15 .....As Needed
- Indexable Carbide Inserts
  15 x 15 x 2.5mm .....As Needed
- Torx Bit T-20 ¼" Shank 1
- T-Handle Bit Driver ¼" 1
- Phillips Head Screwdriver #2 1
- Wrench or Socket ½" 1
- Hex Wrench 3mm 1
- Torque Wrench 0–50 in.-lb 1
- Clean Shop Rags ..... As Needed
- Degreaser ..... As Needed
- Light Machine Oil ..... As Needed

⚠WARNING

Cutterhead inserts are extremely sharp. Wear heavy leather gloves to avoid the risk of serious personal injury during the following steps.

To replace or rotate an indexable insert:

1. DISCONNECT MACHINE FROM POWER!
2. Set fence to 90° and move it all the way back.
3. Remove cutterhead guard, and lower infeed table as far down as it will go.
4. Remove belt guard to access V-helical cutterhead pulley.
5. Rotate pulley as needed to make inserts accessible for removal or rotation.
6. Remove any sawdust from head of carbide insert Torx screw.
7. Put on heavy leather gloves to protect fingers and hands.
8. Remove Torx screw and indexable insert (see **Figure 46**).

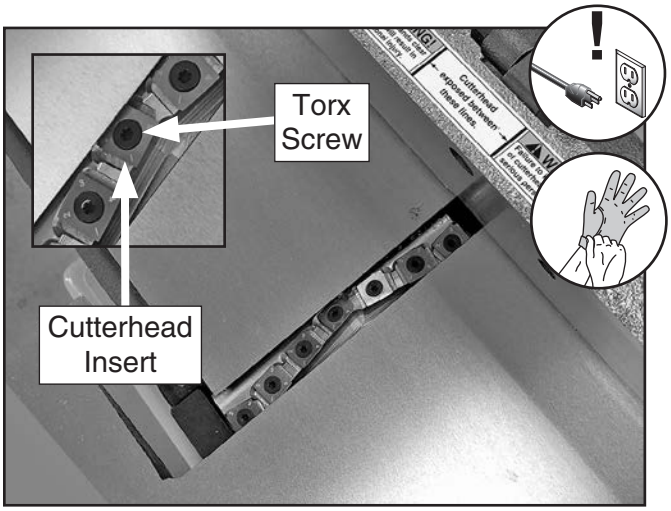

Figure 46. Example of cutterhead inserts and Torx screws.

9. Clean all dust and dirt off insert and cutterhead pocket from which insert was removed, and replace insert so a fresh, sharp edge is facing outward.

   — If all four insert cutting edges have been used, replace insert with a new one. Always position reference dot in same position when installing a new insert to aid in rotational sequencing.

   Note: *Proper cleaning is critical to achieving a smooth finish. Dirt or dust trapped between insert and cutterhead will slightly raise insert, and make noticeable marks on your workpieces the next time you cut.*

10. Lubricate Torx screw threads with a light machine oil, wipe excess oil off threads, and torque Torx screw to 48–50 inch pounds.

    Note: *Excess oil may squeeze between insert and cutterhead or in screw hole, thereby lifting insert or screw slightly and affecting workpiece finishes.*

11. Install belt guard and raise infeed table.

12. Install cutterhead guard back over cutterhead, making sure that spring tension in guard is properly set so guard springs back over cutterhead when it is pulled back and released.

Setting Outfeed Table Height

To help ensure safe operation and best cutting results, set the outfeed table height level with the inserts when they are at top-dead-center (TDC). If the outfeed table is set too low, the workpiece will be tapered from front to back or there will be snipe (a gouge in the end of the board that is uneven with the rest of the cut). If the outfeed table is set too high, the workpiece will hit the edge of the outfeed table during operation, increasing the chance of kickback.

Item(s) Needed	**Qty**
Precision Straightedge 3'	1
Phillips Head Screwdriver #2	1
Open-End Wrenches 12mm	2

To set outfeed table height:

1. DISCONNECT MACHINE FROM POWER!

2. Remove cutterhead guard, fence, and cabinet rear access panel.

3. Loosen outfeed table lock (see **Figure 47**).

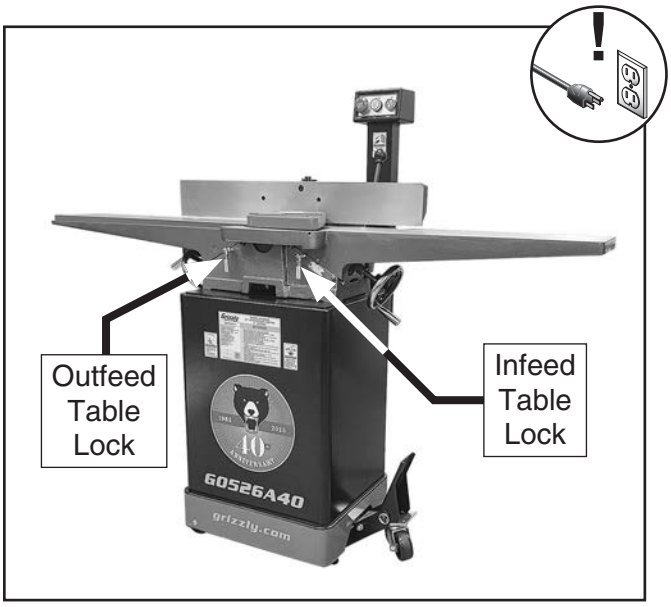

Figure 47. Location of table locks.

4. Place straightedge on outfeed table so it extends over cutterhead.

5. Use motor pulley to rotate cutterhead until one insert is at TDC (its highest point during rotation), as shown in **Figures 48–49**.

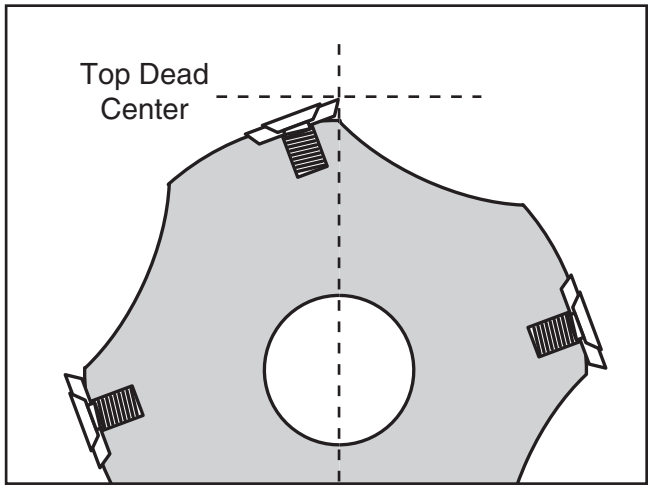

Figure 48. Cutterhead insert at TDC.

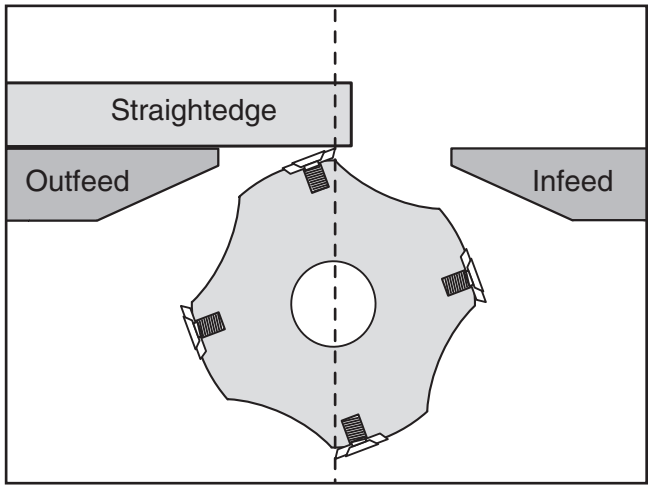

Figure 49. Using straightedge to check outfeed table height.

6. Use outfeed table handwheel to set outfeed table so insert barely touches straightedge, as shown in **Figure 49**.

7. Tighten outfeed table lock so outfeed table will not move during operation.

8. Re-install cutterhead guard, fence, and cabinet rear access panel.

Calibrating Depth Scale

The depth scale can be calibrated or "zeroed" to make sure the cutting depth shown on the scale matches the actual cutting depth (per pass).

Before beginning, set outfeed table height as described in **Setting Outfeed Table Height**.

Tools Needed	**Qty**
Straightedge 12"	1
Phillips Head Screwdriver #2	1
Open-End Wrenches 12mm	2

To calibrate depth scale:

1. DISCONNECT MACHINE FROM POWER!

2. Place straightedge across infeed and outfeed tables (see **Figure 50**).

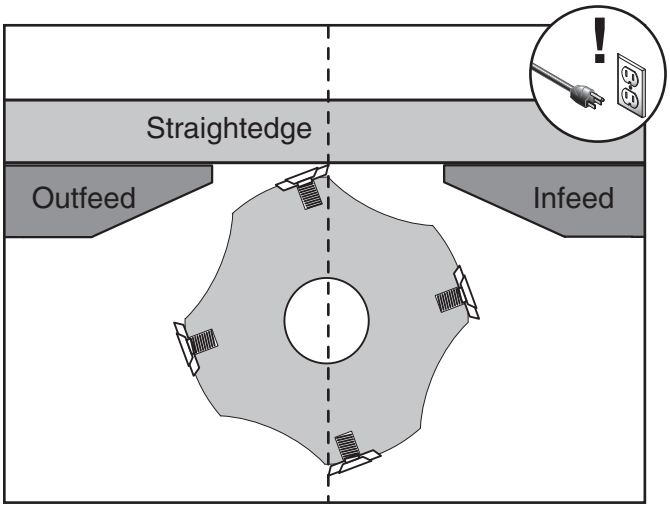

Figure 50. Infeed table adjusted even with outfeed table.

3. Loosen infeed table lock handle (see **Figure 51**).

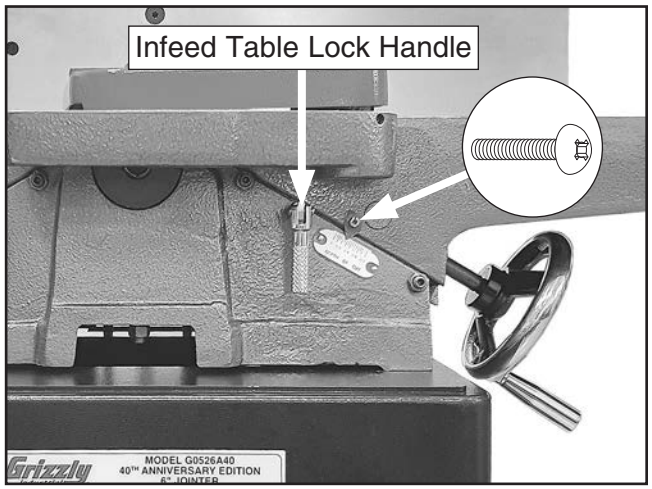

Figure 51. Infeed table depth scale components.

4. Adjust infeed table until it is level with outfeed table (see **Figure 50**).

5. Loosen Phillips head screw on depth scale pointer, adjust pointer to "0", then tighten screw to secure position (see **Figure 51**).

6. Tighten infeed table lock handle to secure position.

Adjusting Gibs

The function of the table gibs is to eliminate excessive play in the table movement. The gibs also control how easy it will be to move the tables up and down.

Tools Needed	**Qty**
Open-End Wrench 12mm	1
Hex Wrench 4mm	1

To adjust table gibs:

1. DISCONNECT MACHINE FROM POWER!

2. Loosen two infeed table gib nuts on front of jointer base (see **Figure 52**).

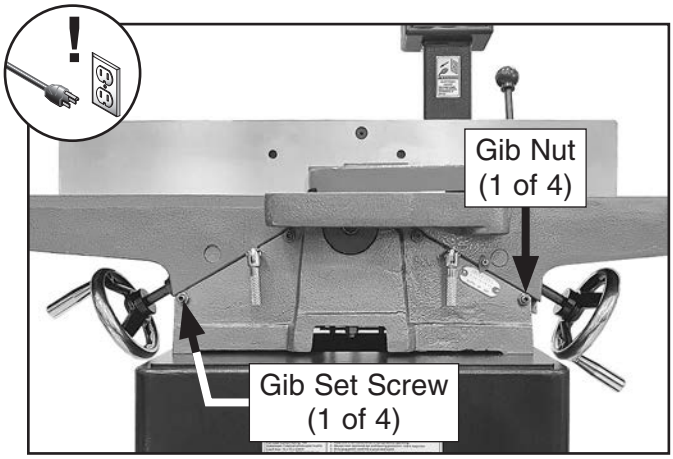

Figure 52. Infeed table gib controls.

3. Oil table ways and outfeed leadscrew if needed (see **Page 34**).

4. Evenly tighten gib set screws a small amount, then check table by moving it up and down. Adjust set screws as needed until friction of table movement is balanced between minimal play and ease of movement, then tighten gib nuts to secure.

   Note: *Tighter gibs reduce play but make it harder to adjust tables.*

5. Repeat **Steps 2–4** with outfeed table.

6. Set outfeed table height as described in **Setting Outfeed Table Height** on **Page 39.**

Setting Fence Stops

The fence stops simplify the task of adjusting the fence to 90˚ and 135˚ (45˚ outward).

Tools Needed	Qty
90° Square	1
Sliding Bevel	1
Open-End Wrench 12mm	2

Setting 90° Fence Stop

1. DISCONNECT MACHINE FROM POWER!

2. Use a 90˚ square to adjust fence to 90˚ (see **Figure 53**).

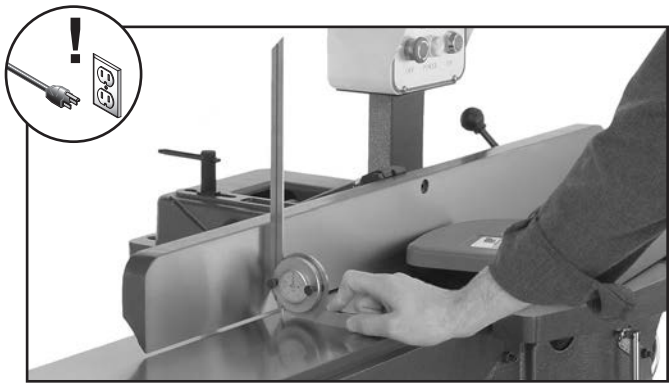

Figure 53. Example of adjusting fence to 90˚.

3. Flip 90˚ swing stop into position shown in **Figure 54**.

4. Loosen jam nut on 90˚ fence stop bolt (see **Figure 54**).

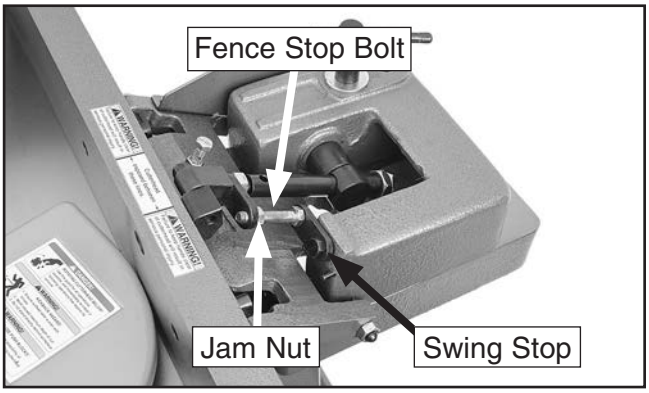

Figure 54. 90˚ swing stop engaged.

5. Adjust the 90˚ fence stop bolt until it makes contact with 90˚ swing stop.

6. Tighten jam nut loosened in **Step 4**.

Setting 135° Fence Stop

1. DISCONNECT MACHINE FROM POWER!

2. Use a sliding bevel adjusted to 135˚ to adjust fence to 135˚ (45˚ outward) position, as shown in **Figure 55**.

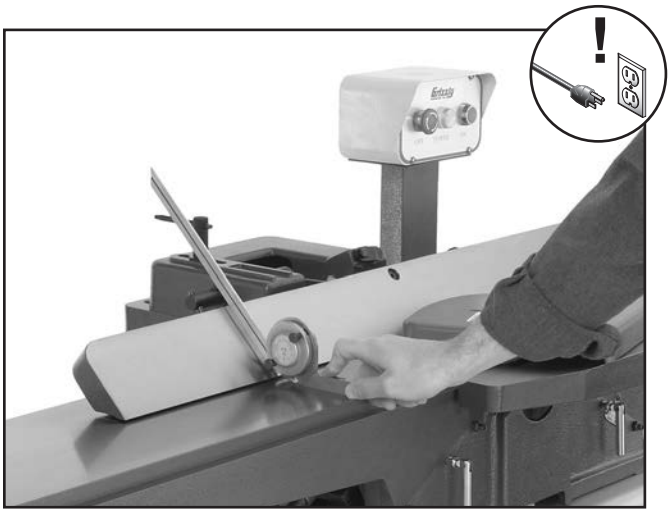

Figure 55. Example of adjusting fence 45˚ outward.

3. Loosen jam nut on 135˚ stop bolt (see **Figure 56**).

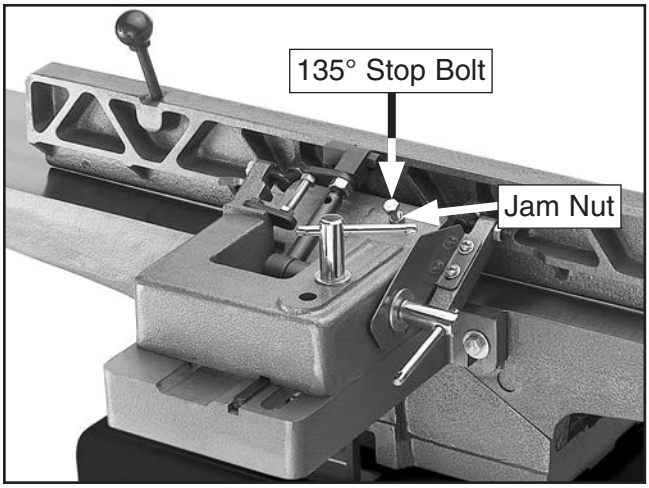

Figure 56. Location of 135˚ stop bolt and jam nut.

4. Adjust 135˚ stop bolt until it makes contact with back of fence.

5. Tighten jam nut loosened in **Step 3**.

Tensioning/ Replacing V-Belt

To ensure optimum power transmission from the motor to the cutterhead, the V-belt must be in good condition (free from cracks, fraying and wear) and properly tensioned.

NOTICE

After approximately 16 hours of operation, belt will stretch and seat into pulley grooves. The belt needs to be re-tensioned after this initial break-in period to ensure optimum power transfer and maximum overall life of the belt.

Item(s) Needed	Qty
Additional Person	1
Phillips Head Screwdriver #2	1
Open-End or Socket Wrenches 12mm	2
Replacement V-Belt	1

Tensioning Belt

1. DISCONNECT MACHINE FROM POWER!

2. Remove cabinet rear access panel.

3. Loosen motor mount hex nuts shown in **Figure 57**. DO NOT completely remove nuts.

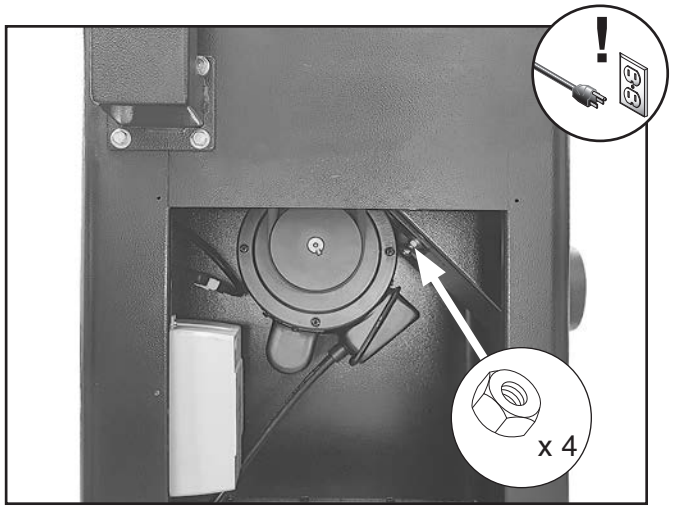

Figure 57. Location of motor mount hex nuts.

4. Press down on motor to keep tension on belt.

CAUTION

Belt and pulleys will be hot after operation. Allow them to cool before handling.

5. Press belt with moderate pressure in center to check belt tension. Belt is correctly tensioned when there is approximately ¼" deflection when pushed, as shown in **Figure 58**.

   — If there is more than ¼" deflection when you check belt tension, repeat the tensioning procedure until it is correct.

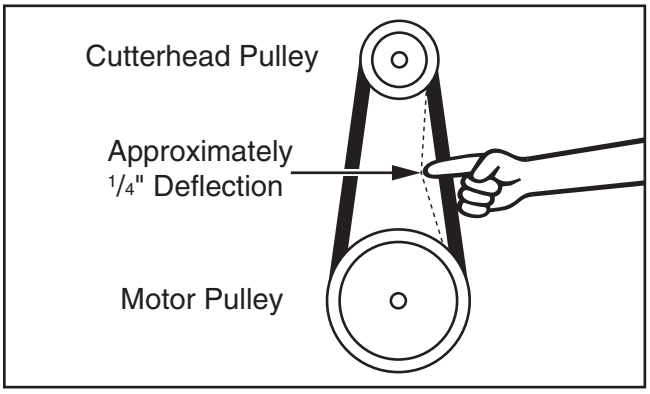

Figure 58. Correct belt deflection when properly tensioned.

6. Tighten motor mount hex nuts (see **Figure 57**), and replace cabinet rear access panel.

Replacing Belt

1. DISCONNECT MACHINE FROM POWER!

2. Remove cabinet rear access panel and belt guard.

3. Loosen motor mount hex nuts shown in **Figure 57**.

4. Have another person lift motor as you remove belt and replace it with a new one. Make sure ribs of belt are seated in pulley grooves.

5. Follow **Steps 4–5** in **Tensioning Belt** procedure to set correct belt tension.

6. Tighten motor mount hex nuts (see **Figure 57**), and replace cabinet rear access panel and belt guard.

Aligning Pulleys

Pulley alignment is another important factor in power transmission and belt life. The pulleys should be parallel to each other and in the same plane (coplanar) for optimum performance.

The pulleys can be adjusted by loosening the pulley set screws, aligning the pulleys, and retightening the set screws.

Tool(s) Needed	**Qty**
Hex Wrench 3mm	1
Straightedge 4'	1
Phillips Head Screwdriver #2	1
Open-End Wrenches 12mm	2

To align pulleys:

1. DISCONNECT MACHINE FROM POWER!

2. Remove cabinet rear access panel and belt guard.

3. Place straightedge against pulleys to check their alignment (see **Figure 59**).

Note: *This can also be done visually (without a straightedge) if you do not have a straightedge available that will fit; however, the most accurate results will come from using a straightedge.*

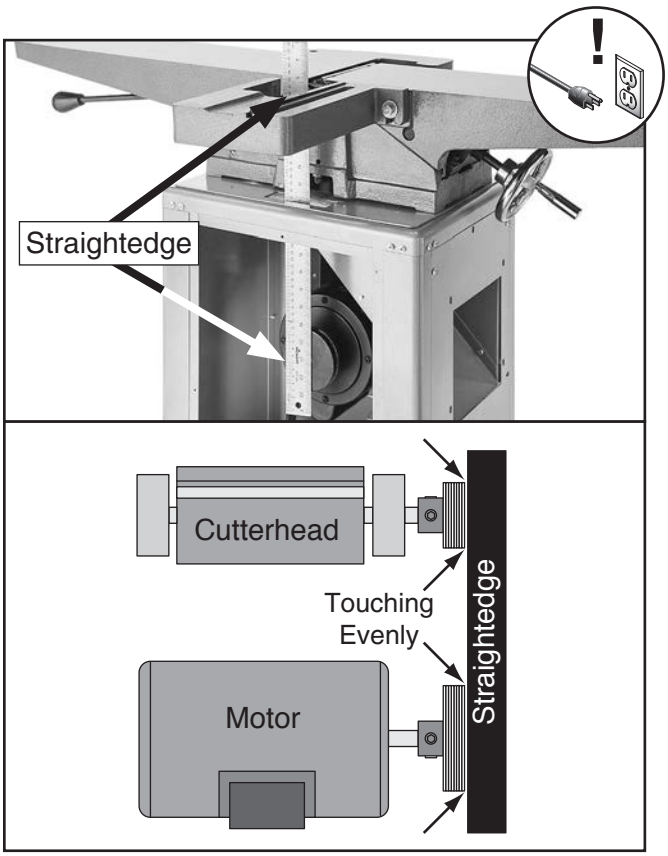

Figure 59. Example of checking pulley alignment.

— If they are not aligned, loosen set screws on cutterhead or motor pulley as needed to align pulleys, then tighten set screws (see **Figure 60**).

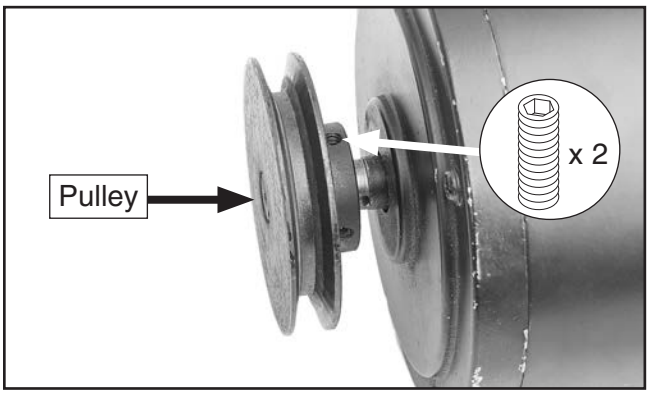

Figure 60. Motor pulley set screw locations.

4. Replace cabinet rear access panel and belt guard.

Checking/Adjusting Table Parallelism

The infeed and outfeed tables must be parallel with each other in order to produce a straight, jointed edge. When the tables are not parallel with each other, the jointer will produce workpieces that are cupped (concave) or bowed (convex) along their length.

Table parallelism is factory-set, and should not normally need to be adjusted when the machine is new. However, after prolonged use, or if the machine has been jarred during lifting or transportation, it may become necessary to adjust the table parallelism.

Table parallelism is adjusted by inserting shims between the dovetailed ways of the outfeed table to make it parallel with the infeed table. Once this adjustment is made, the outfeed table height should not need to be adjusted again.

Item(s) Needed	**Qty**
Straightedge 4'	1
Feeler Gauge Set	1
Metal Shims	As Needed

To check/adjust table parallelism:

1. DISCONNECT MACHINE FROM POWER!

2. Move cutterhead guard out of the way.

3. Set outfeed table height as described in **Setting Outfeed Table Height** on **Page 39**.

4. Rotate cutterhead until insert is no longer at TDC, extend straightedge over both tables, raise infeed table until it contacts straightedge (see **Figure 61**), then lock infeed table.

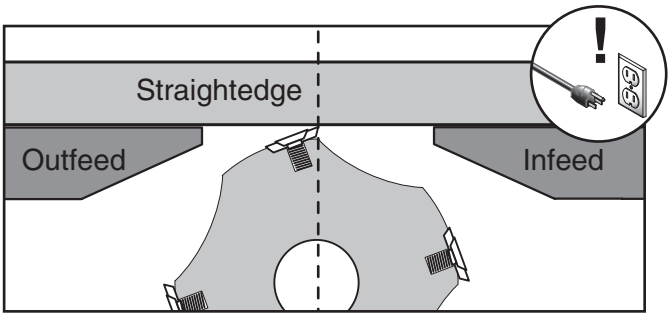

Figure 61. Checking table parallelism.

5. Look down length of straightedge on outfeed side to see if there are any noticeable gaps between straightedge and outfeed table. Do this at both front and rear of table.

   — If there are no gaps, and the straightedge makes full contact with both tables at front and rear, the tables are parallel with each other and no adjustments are necessary.

   — If there are gaps anywhere between one of the tables and the straightedge, the tables are not parallel to each other and must be adjusted. Proceed to **Step 6**.

6. Insert feeler gauge between table and straightedge where gap is greatest (see **Figure 62**). Maximum allowable tolerance is 0.006".

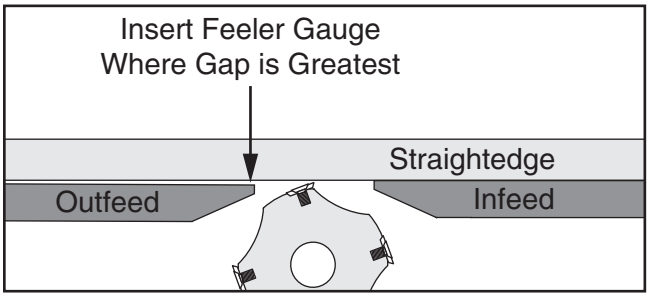

Figure 62. Example of feeler gauge location for checking table parallelism.

7. Loosen outfeed table lock. Place shims between dovetailed ways, as shown, until outfeed table is within 0.006" of parallel with infeed table at front and rear of tables.

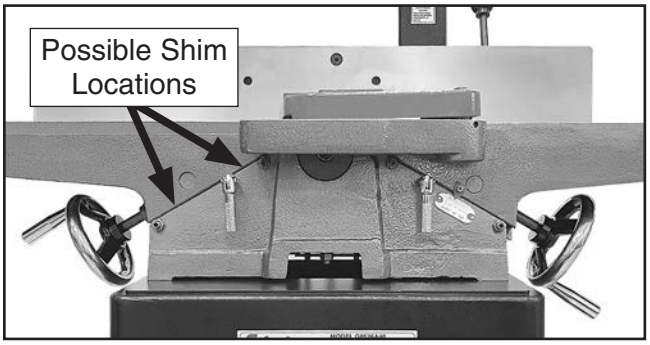

Figure 63. Typical locations to place shims when adjusting table parallelism.

8. Re-check outfeed table height (refer to **Setting Outfeed Table Height** on **Page 39**), and re-adjust if necessary.

Checking/Adjusting Cutterhead Guard

⚠WARNING

The cutterhead guard is a critical safety feature of this jointer. You MUST verify its operation before using the jointer! Failure to properly install this guard will greatly increase risk of serious personal injury.

The cutterhead guard is designed to reduce the risk of accidental contact with hands or fingers with the spinning cutterhead. When properly installed and functioning correctly, the guard automatically rotates clear of the cutterhead during the cutting operation and then springs back over the cutterhead as soon as the operation is complete.

In order to function as intended, the guard must be installed as low as possible over the infeed table without actually touching it (approximately 1/16" above infeed table), and it must have enough spring tension at the mounting shaft to quickly reposition itself against the fence after it is rotated away from the cutterhead and released. Before performing rabbeting operations, adjust guard height to just clear outfeed table.

Item(s) Needed	Qty
Additional Person	1
Precision Ruler 6"	1
Phillips Head Screwdriver #2	1
Hex Wrench 3mm	1

To check/adjust cutterhead guard:

1. DISCONNECT MACHINE FROM POWER!

2. Pull cutterhead guard away from fence and let it go (see **Figure 64**).

   — If cutterhead guard *does* spring back over cutterhead, *contacts* fence, and *does not* drag across infeed table, then cutterhead guard is properly adjusted.

   — If cutterhead guard *does not* spring back over cutterhead, *does not* contact fence, or *drags* across infeed table, proceed to **Step 3**.

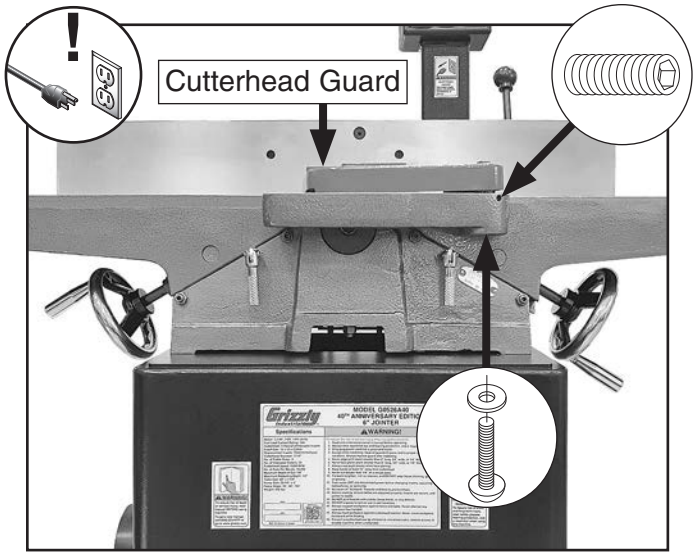

Figure 64. Cutterhead guard components.

3. Remove ½" flat washer and locking jam nut on fence lock handle, then remove handle and fence assembly (see **Figure 65**).

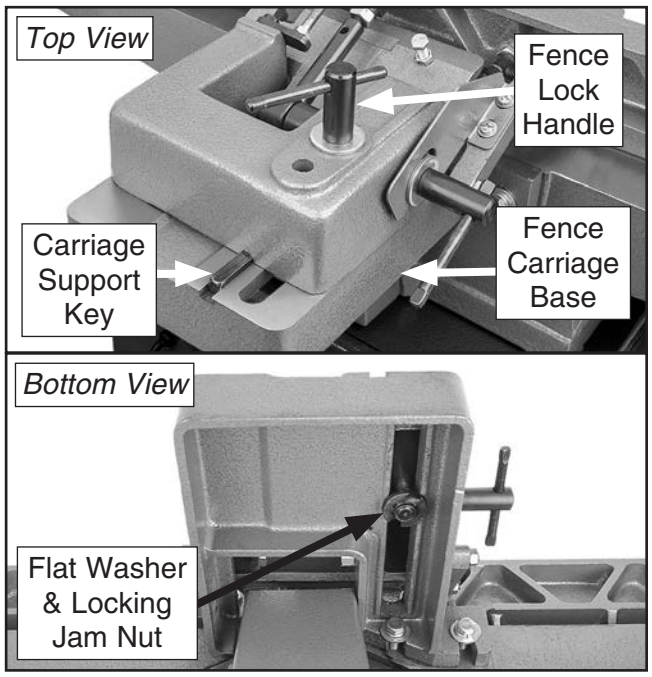

Figure 65. Fence component locations.

4. Loosen Phillips head screw on cutterhead guard shaft, and set screw in rabbeting table (see **Figure 64**).

   Note: *Back off set screw so it is no longer contacting cutterhead guard shaft.*

5. Align corner of cutterhead guard with edge of carriage (see **Figure 66**), raise guard 1/16" above infeed table, then secure set screw and Phillips head screw loosened in **Step 4**.

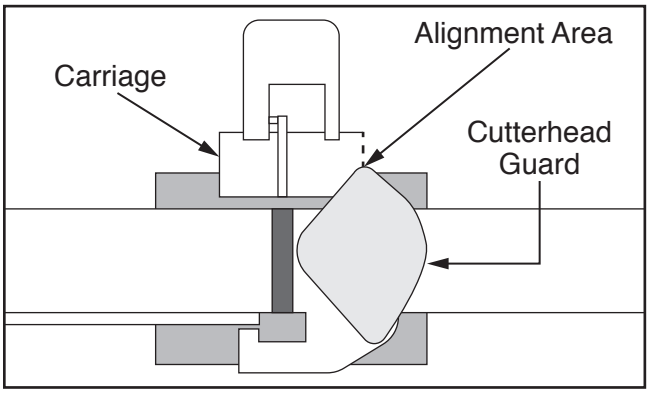

Figure 66. Cutterhead guard aligned with carriage.

6. Rotate cutterhead guard counterclockwise and secure temporarily with a piece of scrap wood (see **Figure 67**).

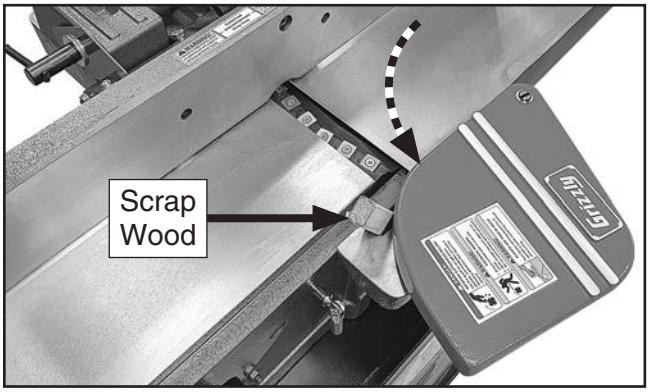

Figure 67. Cutterhead guard secured in place.

7. Place fence onto fence carriage base, making sure fence fits over carriage support key (see **Figure 65**), then insert fence lock handle and secure with ½" flat washer and locking jam nut.

8. Remove scrap wood installed in **Step 6** and repeat **Step 2.** If necessary, repeat **Steps 3–8** until cutterhead guard is properly adjusted.

SECTION 8: WIRING

These pages are current at the time of printing. However, in the spirit of improvement, we may make changes to the electrical systems of future machines. Compare the manufacture date of your machine to the one stated in this manual, and study this section carefully.

If there are differences between your machine and what is shown in this section, call Technical Support at (570) 546-9663 for assistance BEFORE making any changes to the wiring on your machine. An updated wiring diagram may be available. **Note:** *Please gather the serial number and manufacture date of your machine before calling. This information can be found on the main machine label.*

⚠WARNING
Wiring Safety Instructions

SHOCK HAZARD. Working on wiring that is connected to a power source is extremely dangerous. Touching electrified parts will result in personal injury including but not limited to severe burns, electrocution, or death. Disconnect the power from the machine before servicing electrical components!

MODIFICATIONS. Modifying the wiring beyond what is shown in the diagram may lead to unpredictable results, including serious injury or fire. This includes the installation of unapproved aftermarket parts.

WIRE CONNECTIONS. All connections must be tight to prevent wires from loosening during machine operation. Double-check all wires disconnected or connected during any wiring task to ensure tight connections.

CIRCUIT REQUIREMENTS. You MUST follow the requirements at the beginning of this manual when connecting your machine to a power source.

WIRE/COMPONENT DAMAGE. Damaged wires or components increase the risk of serious personal injury, fire, or machine damage. If you notice that any wires or components are damaged while performing a wiring task, replace those wires or components.

MOTOR WIRING. The motor wiring shown in these diagrams is current at the time of printing but may not match your machine. If you find this to be the case, use the wiring diagram inside the motor junction box.

CAPACITORS/INVERTERS. Some capacitors and power inverters store an electrical charge for up to 10 minutes after being disconnected from the power source. To reduce the risk of being shocked, wait at least this long before working on capacitors.

EXPERIENCING DIFFICULTIES. If you are experiencing difficulties understanding the information included in this section, contact our Technical Support at (570) 546-9663.

NOTICE

The photos and diagrams included in this section are best viewed in color. You can view these pages in color at www.grizzly.com.

COLOR KEY

BLACK	Bk	BLUE	Bl	YELLOW	Yl	LIGHT BLUE	Lb
WHITE	Wt	BROWN	Br	YELLOW GREEN	Yg	BLUE WHITE	Bw
GREEN	Gn	GRAY	Gy	PURPLE	Pu	TUR-QUOISE	Tu
RED	Rd	ORANGE	Or	PINK	Pk		

Wiring Diagram

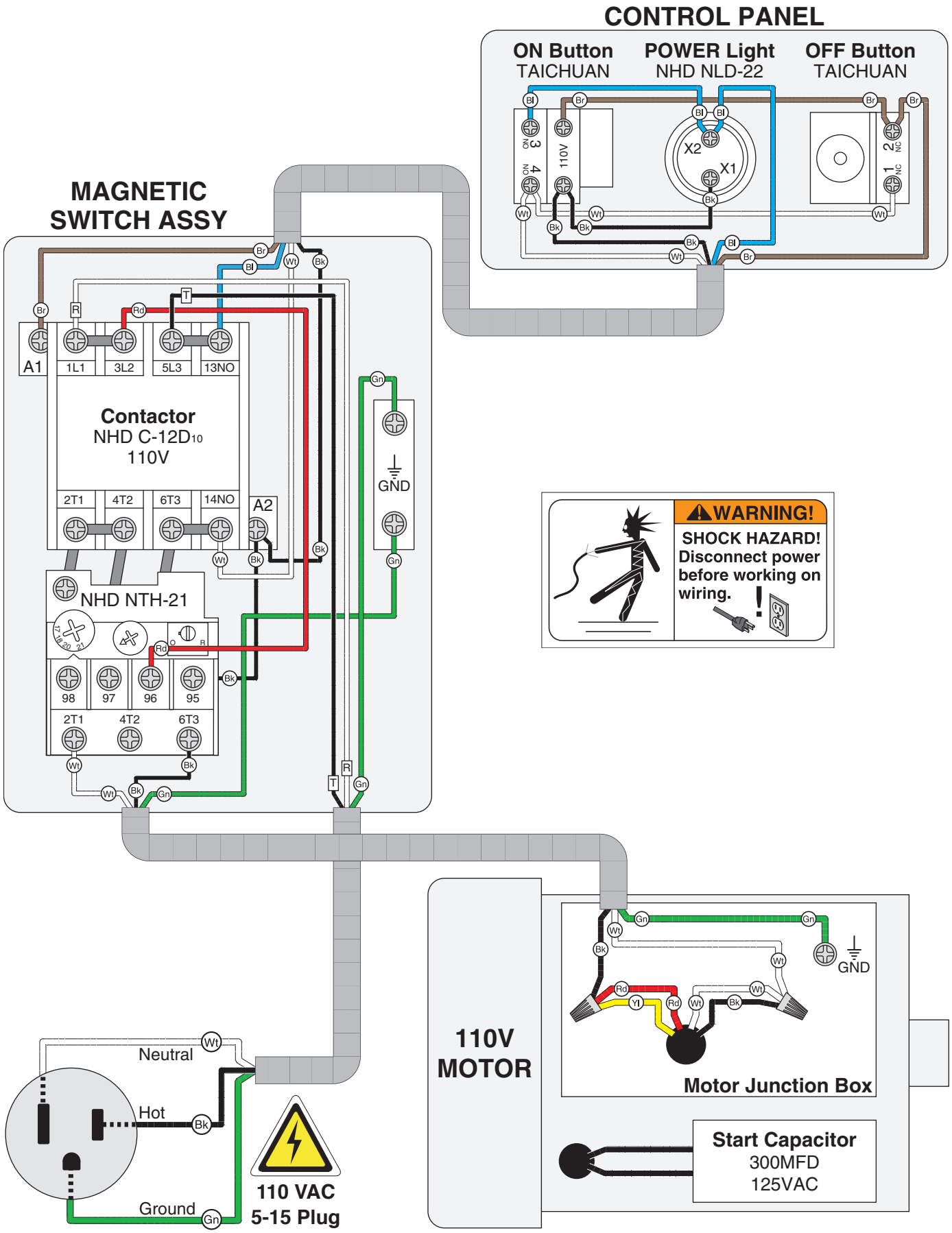

STOP *READ ELECTRICAL SAFETY ON PAGE 48!*

SECTION 9: PARTS

We do our best to stock replacement parts when possible, but we cannot guarantee that all parts shown are available for purchase. Call **(800) 523-4777** or visit **www.grizzly.com/parts** to check for availability.

Table

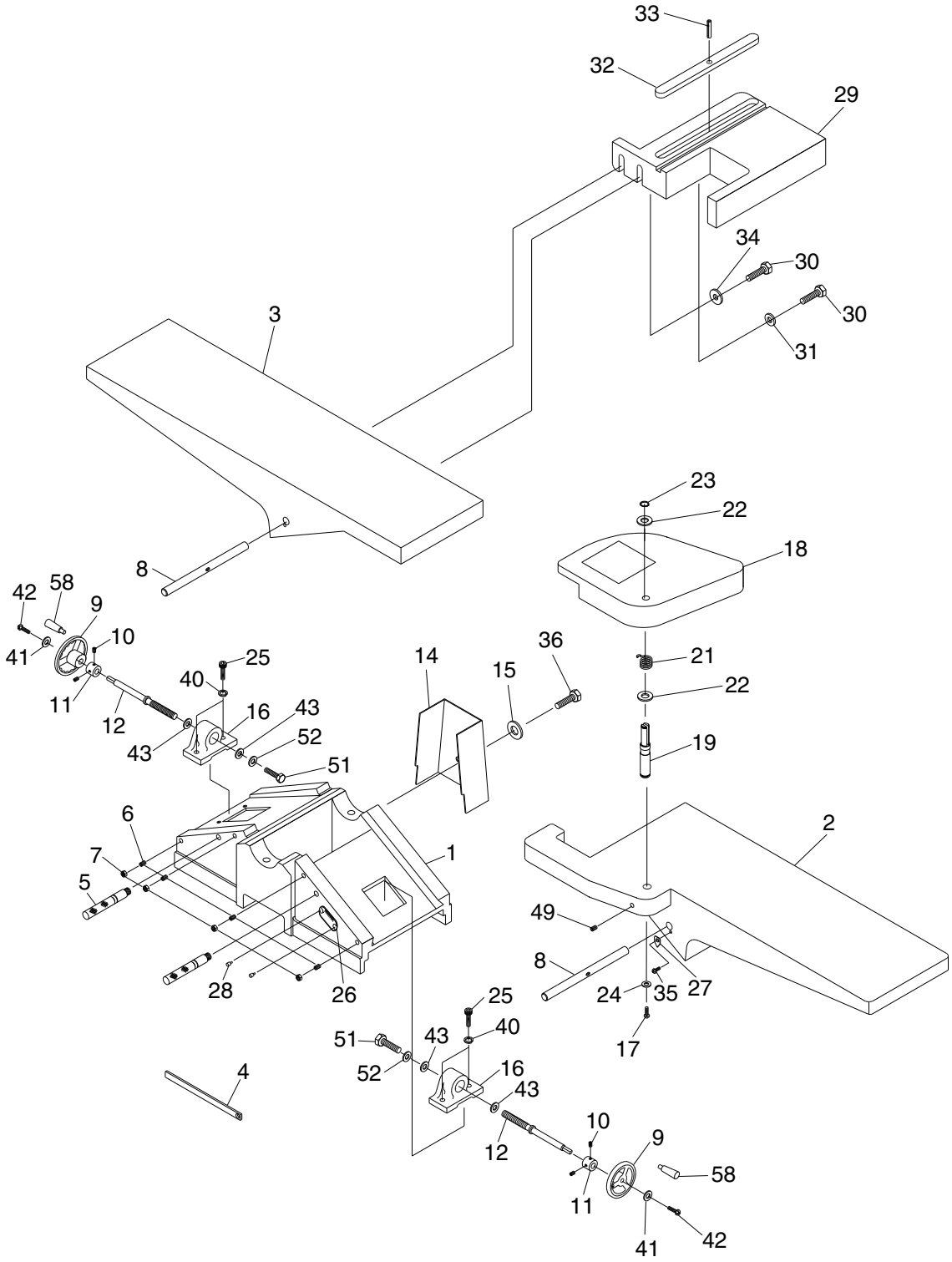

Table Parts List

REF	PART #	DESCRIPTION
1	P0526A40001	BASE
2	P0526A40002	INFEED TABLE
3	P0526A40003	OUTFEED TABLE
4	P0526A40004	GIB
5	P0526A40005	TABLE LOCK HANDLE
6	P0526A40006	SET SCREW 5/16-18 X 1
7	P0526A40007	HEX NUT 5/16-18
8	P0526A40008	PIVOT SHAFT 19 X 180MM
9	P0526A40009	HANDWHEEL TYPE-21 123D X 20-B X 5/16-18
10	P0526A40010	SET SCREW 1/4-20 X 1/4
11	P0526A40011	LOCK COLLAR
12	P0526A40012	TABLE LEADSCREW
14	P0526A40014	BELT GUARD
15	P0526A40015	FLAT WASHER 5/16
16	P0526A40016	LEADSCREW BRACKET
17	P0526A40017	PHLP HD SCR 1/4-20 X 1/2
18	P0526A40018	CUTTERHEAD GUARD
19	P0526A40019	GUARD TORSION PIN
21	P0526A40021	TORSION SPRING 2 X 17 X 15
22	P0526A40022	FLAT WASHER 16MM
23	P0526A40023	EXT RETAINING RING 10MM

REF	PART #	DESCRIPTION
24	P0526A40024	FLAT WASHER 1/4
25	P0526A40025	CAP SCREW 5/16 X 18 X 1
26	P0526A40026	DEPTH-OF-CUT SCALE
27	P0526A40027	POINTER
28	P0526A40028	RIVET 2 X 5 NAMEPLATE
29	P0526A40029	CARRIAGE SUPPORT
30	P0526A40030	HEX BOLT 3/8-16 X 1-1/4
31	P0526A40031	FLAT WASHER 3/8
32	P0526A40032	KEY 3/8 X 3/8 X 9
33	P0526A40033	ROLL PIN 4 X 12
34	P0526A40034	FLAT WASHER 3/8
35	P0526A40035	PHLP HD SCR 8-32 X 1/4
36	P0526A40036	HEX BOLT 5/16-18 X 2-1/2
40	P0526A40040	FLAT WASHER 5/16
41	P0526A40041	FLAT WASHER 3/16
42	P0526A40042	PHLP HD SCR 10-24 X 1/2
43	P0526A40043	FLAT WASHER 1/2
49	P0526A40049	SET SCREW M6-1 X 20
51	P0526A40051	HEX BOLT 1/4-20 X 1/2
52	P0526A40052	FLAT WASHER 1/4
58	P0526A40058	REVOLVING HANDLE 5/16-18, 3/4 X 3-1/4

Fence

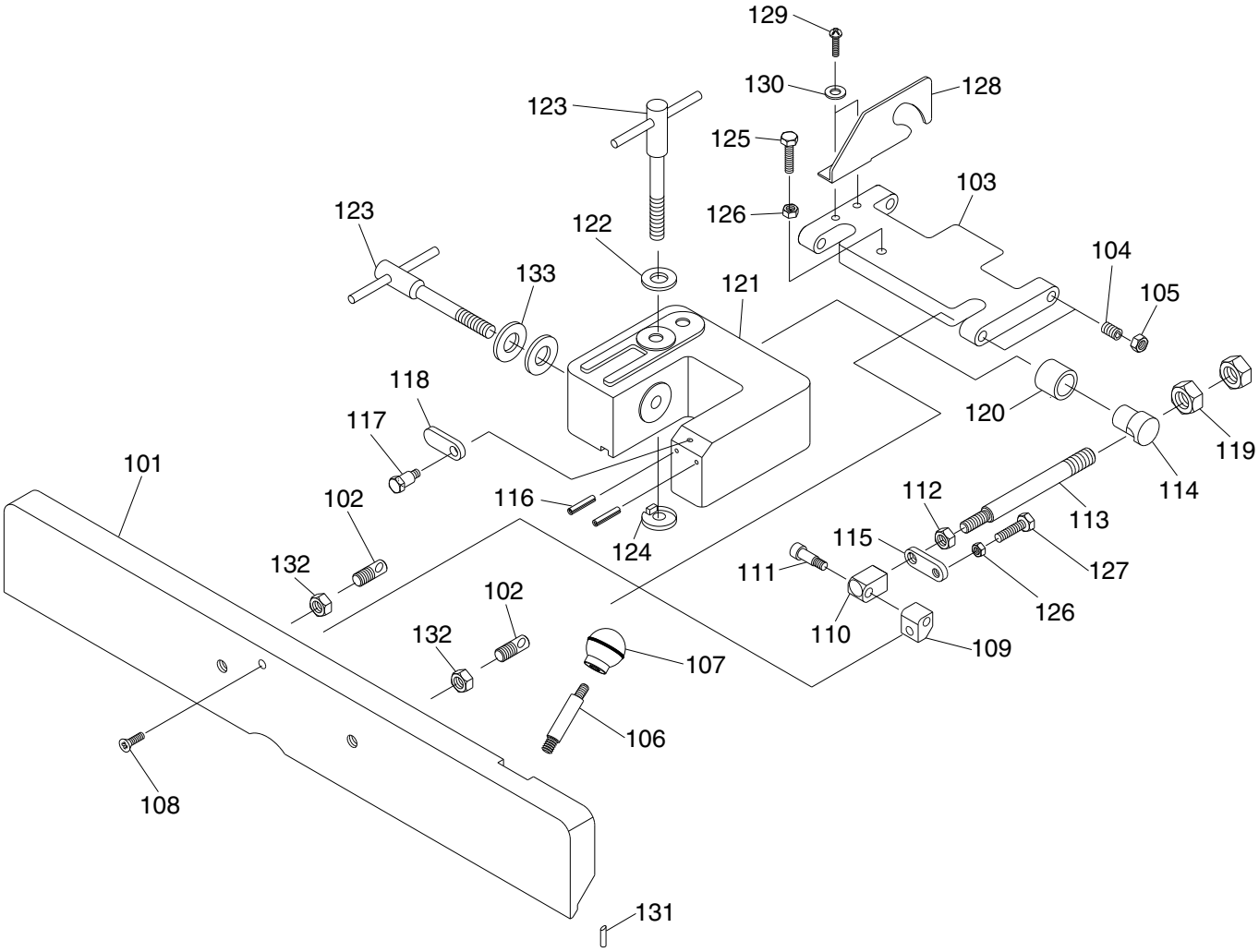

REF	PART #	DESCRIPTION
101	P0526A40101	FENCE
102	P0526A40102	PIVOT STUD 1/2-20 X 3/4
103	P0526A40103	FENCE HINGE
104	P0526A40104	SET SCREW 3/8-16 X 1-1/2 CONE-PT
105	P0526A40105	HEX NUT 3/8-16
106	P0526A40106	STUD 3/8-16 x 80, 15, 7
107	P0526A40107	KNOB 3/8-16, D32, BALL
108	P0526A40108	FLAT HD CAP SCR 5/16-18 X 1-3/4
109	P0526A40109	FENCE BRACKET
110	P0526A40110	FENCE STOP BRACKET
111	P0526A40111	SHOULDER BOLT 5/16-18 X 12, 3/8 X 3/4
112	P0526A40112	HEX NUT 7/16-14
113	P0526A40113	STANDOFF STUD 7/16-14 X 1-3/16, 5/8-18, 6-1/2
114	P0526A40114	FENCE TILT CLAMP
115	P0526A40115	STOP TAB 90 DEG
116	P0526A40116	ROLL PIN 4 X 12
117	P0526A40117	SHOULDER BOLT 5/16-18 X 7/16, 1/4 X 1/2

REF	PART #	DESCRIPTION
118	P0526A40118	SWING STOP
119	P0526A40119	HEX NUT 5/8-18
120	P0526A40120	FENCE TILT BUSHING
121	P0526A40121	FENCE CARRIAGE
122	P0526A40122	FLAT WASHER 1/2
123	P0526A40123	FENCE LOCK 1/2-12 X 1-1/8
124	P0526A40124	FENCE TILT LOCK NUT 1/2-12
125	P0526A40125	HEX BOLT 5/16-18 X 1
126	P0526A40126	HEX NUT 5/16-18
127	P0526A40127	HEX BOLT 5/16-18 X 1-3/4
128	P0526A40128	FENCE LOCK BRACKET
129	P0526A40129	PHLP HD SCR 1/4-20 X 1/2
130	P0526A40130	FLAT WASHER 1/4
131	P0526A40131	SUPPORT PIN 1/4 X 1 PLASTIC
132	P0526A40132	HEX NUT 1/2-20
133	P0526A40133	FLAT WASHER 1/2

Cutterhead

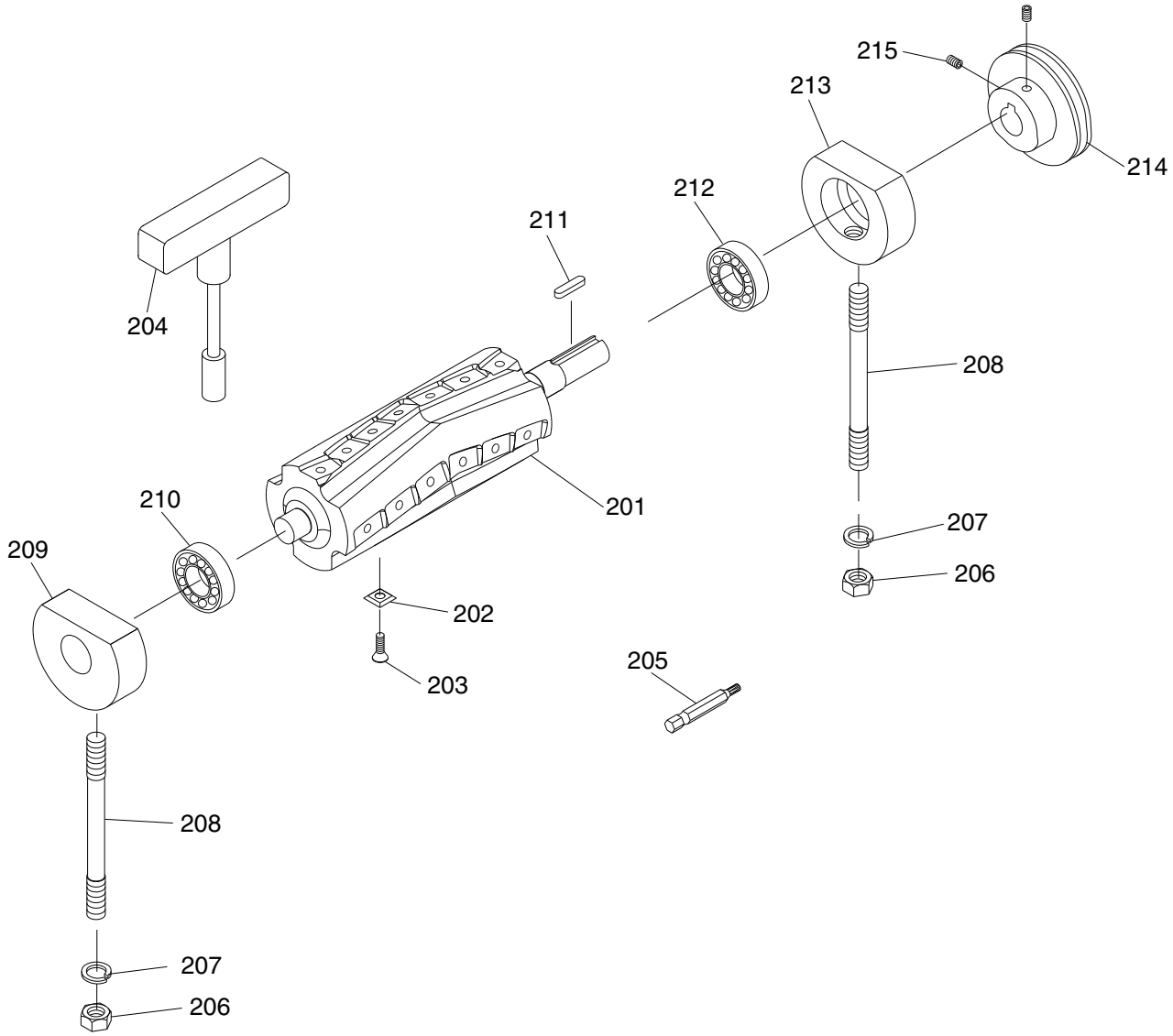

REF	PART #	DESCRIPTION
201	P0526A40201	V-HELICAL CUTTERHEAD ASSEMBLY 6"
202	P0526A40202	CARBIDE INSERT 15 X 15 X 2.5MM 10-PK
203	P0526A40203	FLAT HD TORX SCR T20 M6-1 X 15
204	P0526A40204	T-HANDLE BIT DRIVER 1/4"
205	P0526A40205	TORX BIT T-20
206	P0526A40206	HEX NUT 3/8-24
207	P0526A40207	LOCK WASHER 3/8
208	P0526A40208	STUD-SE 3/8-24 X 3-5/16, 1, 3/8"

REF	PART #	DESCRIPTION
209	P0526A40209	BEARING BLOCK (LEFT)
210	P0526A40210	BALL BEARING 6202-2RS
211	P0526A40211	KEY 5 X 5 X 30 RE
212	P0526A40212	BALL BEARING 6203-2RS
213	P0526A40213	BEARING BLOCK (RIGHT)
214	P0526A40214	CUTTERHEAD PULLEY
215	P0526A40215	SET SCREW 1/4-20 X 3/8

Stand

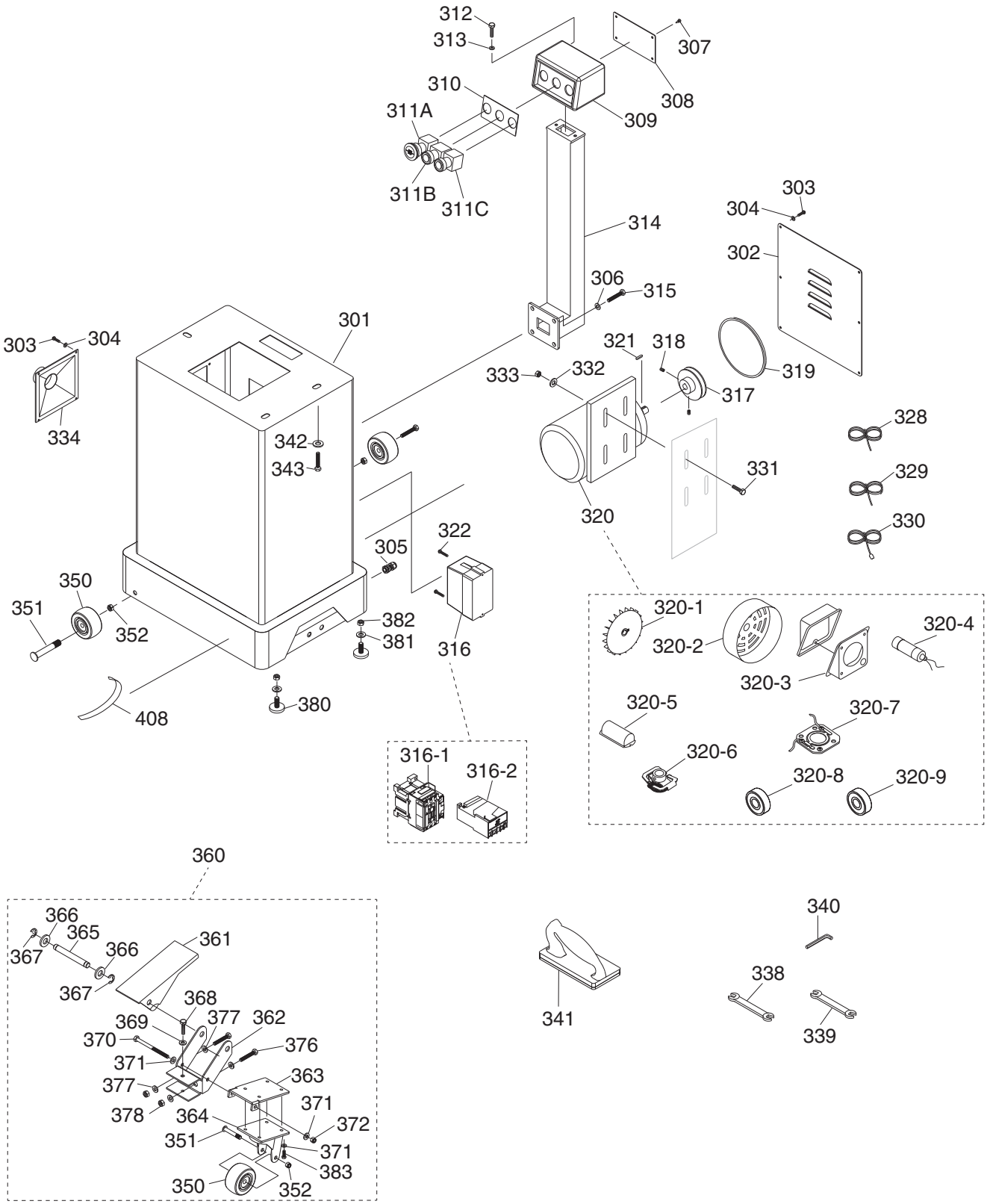

Stand Parts List

REF	PART #	DESCRIPTION
301	P0526A40301	CABINET STAND
302	P0526A40302	REAR ACCESS PANEL
303	P0526A40303	PHLP HD SCR 8-32 X 3/8
304	P0526A40304	FLAT WASHER 5MM
305	P0526A40305	STRAIN RELIEF TYPE-3 MG20A
306	P0526A40306	FLAT WASHER 5/16
307	P0526A40307	TAP SCREW #8 X 1/2
308	P0526A40308	BACK PANEL
309	P0526A40309	SWITCH HOUSING
310	P0526A40310	SWITCH PLATE
311A	P0526A40311A	E-STOP BUTTON TAICHUAN
311B	P0526A40311B	INDICATOR LIGHT NHD NLD-22
311C	P0526A40311C	ON BUTTON TAICHUAN
312	P0526A40312	HEX BOLT 1/4-20 X 5/8
313	P0526A40313	FLAT WASHER 1/4
314	P0526A40314	PEDESTAL BRACKET
315	P0526A40315	HEX BOLT 5/16-18 X 1
316	P0526A40316	MAG SWITCH ASSY
316-1	P0526A40316-1	CONTACTOR NHD C-12D10
316-2	P0526A40316-2	OL RELAY NHD NTH-21 17-21A
317	P0526A40317	MOTOR PULLEY
318	P0526A40318	SET SCREW 1/4-20 X 3/8
319	P0526A40319	V-BELT A36
320	P0526A40320	MOTOR 1.5HP 110V 1-PH
320-1	P0526A40320-1	MOTOR FAN
320-2	P0526A40320-2	MOTOR FAN COVER
320-3	P0526A40320-3	JUNCTION BOX
320-4	P0526A40320-4	S CAPACITOR 300MFD 125V 2 X 4-1/8
320-5	P0526A40320-5	CAPACITOR COVER
320-6	P0526A40320-6	CENTRIFUGAL SWITCH 21 2587
320-7	P0526A40320-7	CONTACT PLATE 27 X 69 X CPT 7MM
320-8	P0526A40320-8	BALL BEARING 6203-2RS (FRONT)
320-9	P0526A40320-9	BALL BEARING 6202-2RS (REAR)
321	P0526A40321	KEY 5 X 5 X 30 RE
322	P0526A40322	PHLP HD SCR M4-.7 X 15
328	P0526A40328	MOTOR CORD 12G 3W 19"

REF	PART #	DESCRIPTION
329	P0526A40329	CONTROL PANEL CORD 4W 47"
330	P0526A40330	POWER CORD 12G 3W 86" 5-15P
331	P0526A40331	CARRIAGE BOLT 5/16-18 X 5/8
332	P0526A40332	FLAT WASHER 5/16
333	P0526A40333	HEX NUT 5/16-18
334	P0526A40334	DUST HOOD
338	P0526A40338	WRENCH 8 X 10MM OPEN-ENDS
339	P0526A40339	WRENCH 12 X 14MM OPEN-ENDS
340	P0526A40340	HEX WRENCH 3MM
341	P0526A40341	PUSH BLOCK
342	P0526A40342	LOCK WASHER 3/8
343	P0526A40343	HEX BOLT 3/8-16 X 3/4
350	P0526A40350	WHEEL (BLACK)
351	P0526A40351	HEX BOLT 3/8-24 X 60
352	P0526A40352	HEX NUT 3/8-24
360	P0526A40360	FOOT PEDAL ASSEMBLY
361	P0526A40361	PEDAL
362	P0526A40362	PEDAL BRACKET
363	P0526A40363	TROLLEY BRACKET (UPPER)
364	P0526A40364	TROLLEY BRACKET (LOWER)
365	P0526A40365	CLEVIS PIN, HEADLESS-GROOVED
366	P0526A40366	FLAT WASHER 13 X 28 X 3MM
367	P0526A40367	E-CLIP 12MM
368	P0526A40368	HEX BOLT 5/16-18 X 2
369	P0526A40369	FLAT WASHER 5/16
370	P0526A40370	HEX BOLT 5/16-18 X 4
371	P0526A40371	FLAT WASHER 5/16
372	P0526A40372	LOCK NUT 5/16-18
376	P0526A40376	HEX BOLT 3/8-16 X 2-1/2
377	P0526A40377	FLAT WASHER 3/8
378	P0526A40378	HEX NUT 3/8-16
380	P0526A40380	FOOT 3/8-16 X 2
381	P0526A40381	FLAT WASHER 3/8
382	P0526A40382	HEX NUT 3/8-16
383	P0526A40383	HEX BOLT 5/16-16 X 3/8
408	P0526A40408	GREEN TAPE 100 X 1620MM

Labels & Cosmetics

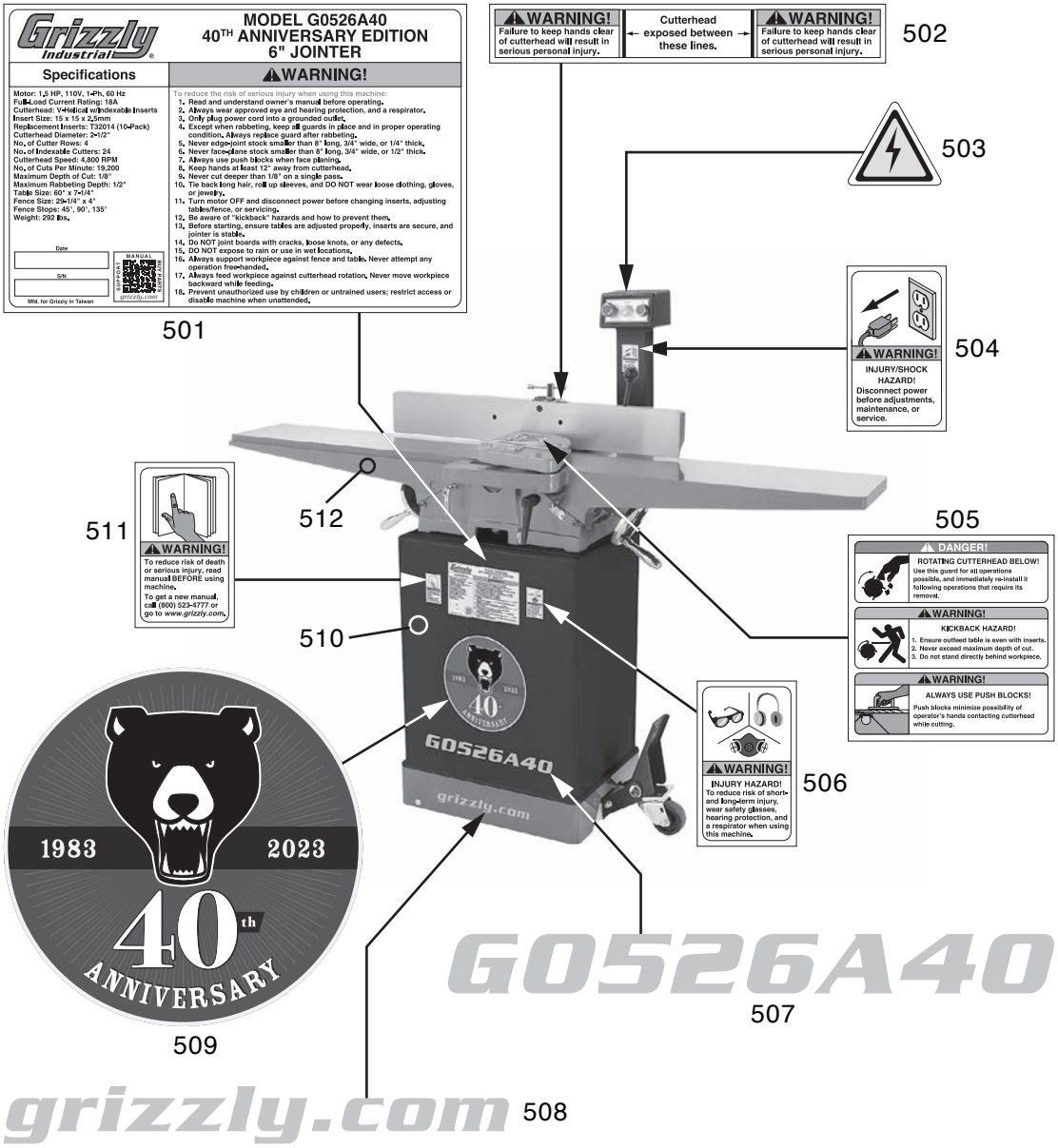

REF	PART #	DESCRIPTION
501	P0526A40501	MACHINE ID LABEL
502	P0526A40502	CUTTERHEAD EXPOSURE WARNING LABEL
503	P0526A40503	ELECTRICITY LABEL
504	P0526A40504	DISCONNECT POWER LABEL
505	P0526A40505	CUTTERHEAD WARNING LABEL
506	P0526A40506	EYE/EAR/LUNG WARNING LABEL

REF	PART #	DESCRIPTION
507	P0526A40507	MODEL NUMBER LABEL
508	P0526A40508	GRIZZLY.COM LABEL
509	P0526A40509	40TH ANNIVERSARY LABEL
510	P0526A40510	TOUCH-UP PAINT, BLACK
511	P0526A40511	READ MANUAL LABEL
512	P0526A40512	TOUCH-UP PAINT, GRIZZLY GREEN

⚠WARNING

Safety labels help reduce the risk of serious injury caused by machine hazards. If any label comes off or becomes unreadable, the owner of this machine MUST replace it in the original location before resuming operations. For replacements, contact (800) 523-4777 or www.grizzly.com.

WARRANTY & RETURNS

Grizzly Industrial, Inc. warrants every product it sells for a period of **1 year** to the original purchaser from the date of purchase. This warranty does not apply to defects due directly or indirectly to misuse, abuse, negligence, accidents, repairs or alterations or lack of maintenance. This is Grizzly's sole written warranty and any and all warranties that may be implied by law, including any merchantability or fitness, for any particular purpose, are hereby limited to the duration of this written warranty. We do not warrant or represent that the merchandise complies with the provisions of any law or acts unless the manufacturer so warrants. In no event shall Grizzly's liability under this warranty exceed the purchase price paid for the product and any legal actions brought against Grizzly shall be tried in the State of Washington, County of Whatcom.

We shall in no event be liable for death, injuries to persons or property or for incidental, contingent, special, or consequential damages arising from the use of our products.

The manufacturers reserve the right to change specifications at any time because they constantly strive to achieve better quality equipment. We make every effort to ensure that our products meet high quality and durability standards and we hope you never need to use this warranty.

In the event you need to use this warranty, contact us by mail or phone and give us all the details. We will then issue you a "Return Number," which must be clearly posted on the outside as well as the inside of the carton. We will not accept any item back without this number. Proof of purchase must accompany the merchandise.

Please feel free to write or call us if you have any questions about the machine or the manual.

Thank you again for your business and continued support. We hope to serve you again soon.

To take advantage of this warranty, you must register it at **https://www.grizzly.com/forms/warranty**, or you can scan the QR code below to be automatically directed to our warranty registration page. Enter all applicable information for the product.

WARRANTY

grizzly.com