READ THIS FIRST

Model G0651/G0652

******IMPORTANT UPDATE******

For Machines Mfd. Since 10/23
and Owner's Manual Revised 09/10

For questions or help with this product contact Tech Support at (570) 546-9663 or techsupport@grizzly.com

The following changes were recently made since the owner's manual was printed:

- Parts have changed.

Aside from this information, all other content in the owner's manual applies and MUST be read and understood for your own safety. **IMPORTANT: Keep this update with the owner's manual for future reference.**

For questions or help, contact our Tech Support at (570) 546-9663 or techsupport@grizzly.com.

Revised Parts

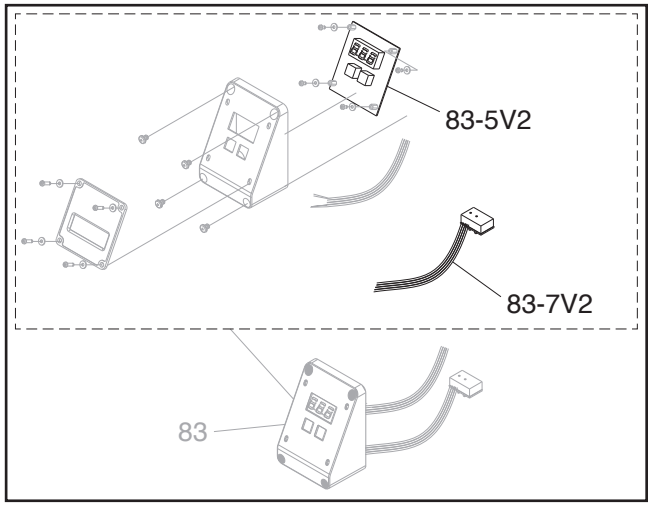

Revised G0651 Parts List

REF	PART #	DESCRIPTION
83-5V2	P0651083-5V2	CIRCUIT BOARD CBEC V2.10.23
83-7V2	P0651083-7V2	DATA CORD 24G 4W 18" V2.10.23

Revised G0652 Parts List

REF	PART #	DESCRIPTION
83-5V2	P0652083-5V2	CIRCUIT BOARD CBEC V2.10.23
83-7V2	P0652083-7V2	DATA CORD 24G 4W 18" V2.10.23

C US
175370

COPYRIGHT © OCTOBER, 2023 BY GRIZZLY INDUSTRIAL, INC.
WARNING: NO PORTION OF THIS MANUAL MAY BE REPRODUCED IN ANY SHAPE OR FORM WITHOUT THE WRITTEN APPROVAL OF GRIZZLY INDUSTRIAL, INC.
#JP22930 PRINTED IN TAIWAN

READ THIS FIRST

Model G0651/G0652

******IMPORTANT UPDATE******

For Machines Mfd. Since 07/17
and Owner's Manual Revised 09/10

For questions or help with this product contact Tech Support at (570) 546-9663 or techsupport@grizzly.com

The following changes were recently made since the owner's manual was printed:

- **Inventory** and **Assembly** have been updated.

Aside from this information, all other content in the owner's manual applies and MUST be read and understood for your own safety. **IMPORTANT: Keep this update with the owner's manual for future reference.**

For questions or help, contact our Tech Support at (570) 546-9663 or techsupport@grizzly.com.

Revised Outfeed Table Inventory

Box Contents (Figure 1): Qty

A. Outfeed Table 1
B. Lower Shelf 1
C. Shelf End Plate 1
D. Support Legs 2
E. Lower Shelf Brackets 2
F. Front Outfeed Table Bracket 1

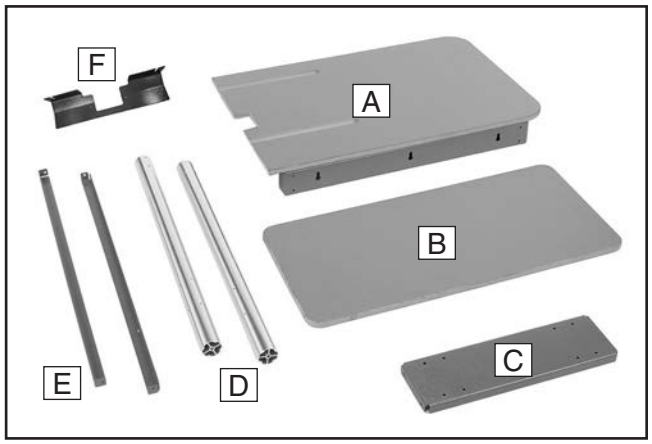

Figure 1. Outfeed table components.

Fasteners (and where used): Qty

- Hex Bolts M8-1.25 x 20 w/Washer (Rear Rail/Outfeed Table) 2
- Hex Nuts M8-1.25 (Rear Rail/Outfeed Table) 2
- Hex Bolts M6-1 x 12 (Brackets/Cabinet) 2
- Hex Nuts M6-1 (Bracket/End Plate) 2
- Flat Washers 6mm (Outfeed Table/Legs/Shelf Brackets) 16
- Phillips Head Screws M6-1 x 12 (Outfeed Table/Legs/Shelf Brackets) 14
- Feet ⅜"-16 x 2 (Legs) 2
- Hex Nuts ⅜"-16 (Legs) 2
- Tap Screws M4 x 16 (Outfeed Table /Front Outfeed Table Bracket) 8

C US
175370

COPYRIGHT © JULY, 2017 BY GRIZZLY INDUSTRIAL, INC., REVISED MAY, 2023 (CS)
WARNING: NO PORTION OF THIS MANUAL MAY BE REPRODUCED IN ANY SHAPE OR FORM WITHOUT THE WRITTEN APPROVAL OF GRIZZLY INDUSTRIAL, INC.
#ES19102 PRINTED IN TAIWAN

Revised Assembly

These steps replace **Steps 1–15** of the **Assembly** section in the owner's manual. Complete these steps, then refer to **Steps 16–32** in the owner's manual to complete the assembly.

To assemble extension table and outfeed tables:

1. Fasten 91½" front rail onto table saw with (4) M8-1.25 x 25 flat head screws, as shown in **Figure 2**. Also, secure far left side of rail with (1) M8-1.25 x 25 flat head screw, 8mm lock washer, and M8-1.25 hex nut.

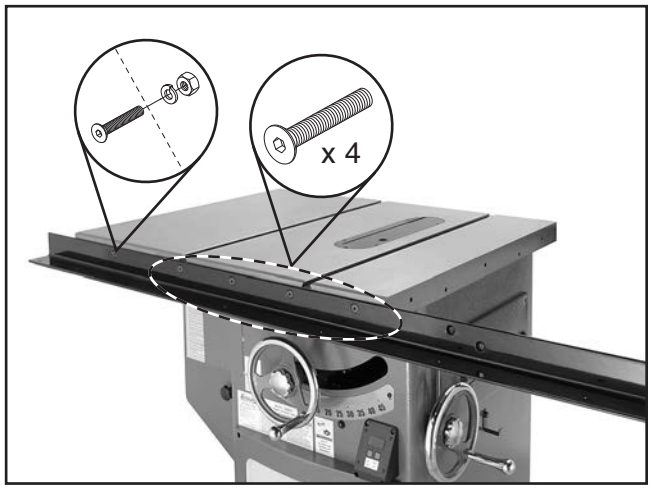

Figure 2. Front rail installed.

2. Fasten 79" rear rail to table with (4) M8-1.25 x 25 cap screws, 8mm lock washers, and 8mm flat washers, as shown in **Figure 3**. Secure left side of rail to table with (1) M8-1.25 x 25 cap screw, (2) 8mm lock washers, (1) 8mm flat washer, and (1) M8-1.25 hex nut.

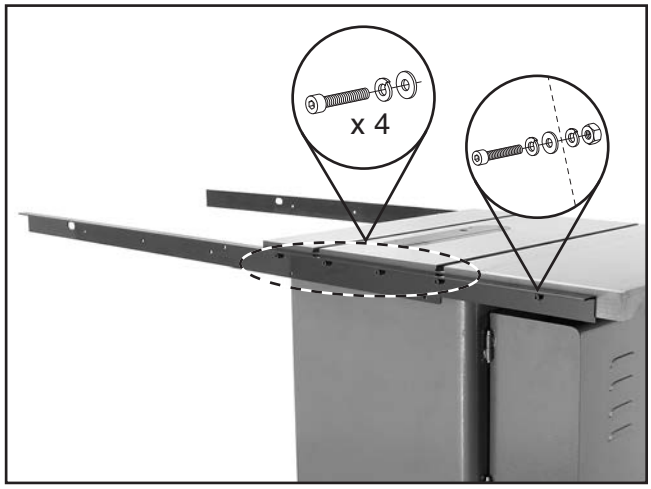

Figure 3. Rear rail installed.

3. Secure (2) mounting plates to table with (2) M8-1.25 x 25 flat head screws on right side of table saw cabinet, as shown in **Figure 4**, then thread (2) M8-1.25 x 12 hex bolts with 8mm flat washers into mounting plates. Do not fully tighten bolts.

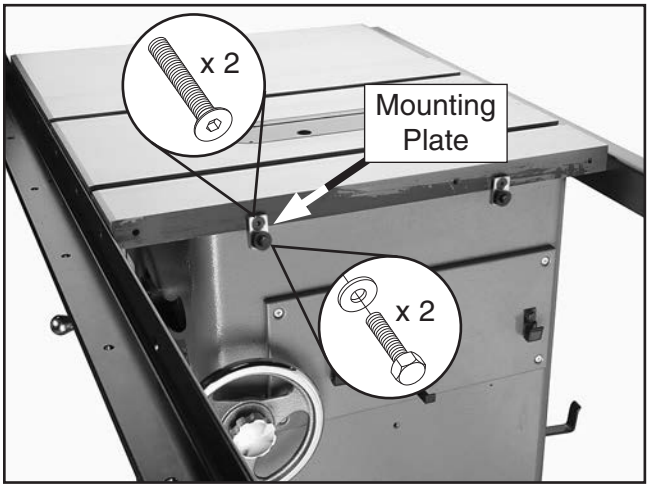

Figure 4. Mounting plates installed.

4. With help of an assistant, place extension table between rails and slide table slots over hex bolts installed in **Step 3**.

5. While assistant holds extension table, fasten 91½" front rail to extension table with (3) M8-1.25 x 25 flat head screws, 8mm flat washers, and M8-1.25 hex nuts (see **Figure 5**). Finger-tighten for now.

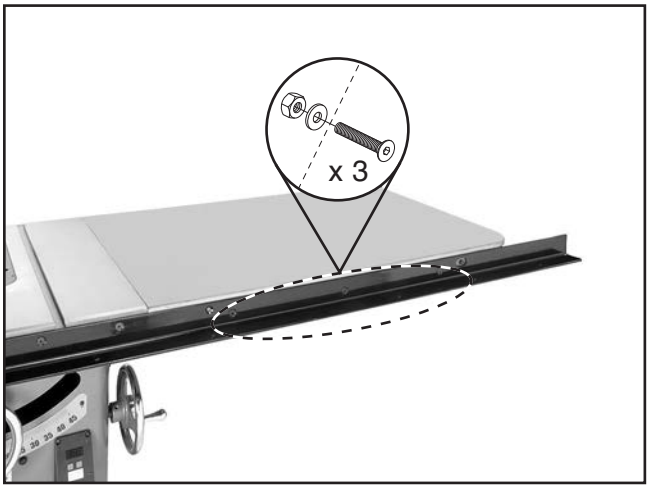

Figure 5. Front rail/table fastener locations.

6. Fasten 79" rear rail to extension table with (3) M8-1.25 x 25 cap screws, (3) 8mm lock washers, (6) 8mm flat washers, and (3) M8-1.25 hex nuts, as shown in **Figure 6**. Finger tighten for now.

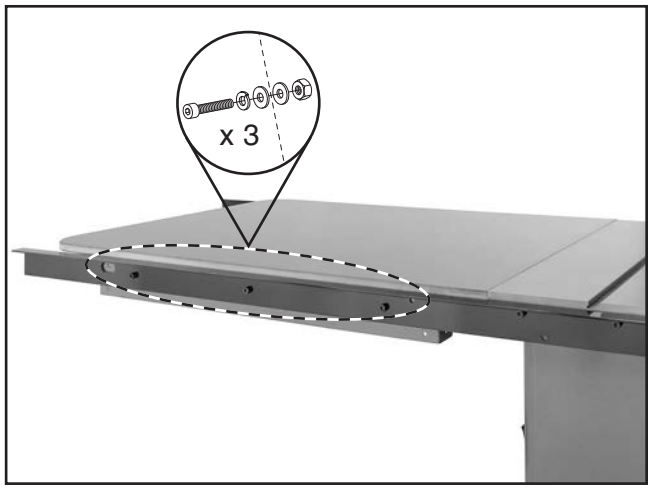

Figure 6. Rear rail/table fastener locations.

7. Align table and extension table with straightedge, as shown in **Figure 7**, then tighten all mounting fasteners.

Figure 7. Aligning main extension table.

8. Thread (1) ⅜"-16 hex nut on each of the (2) extension table feet, then install feet in bottom of each extension table support leg, as shown in **Figure 8**.

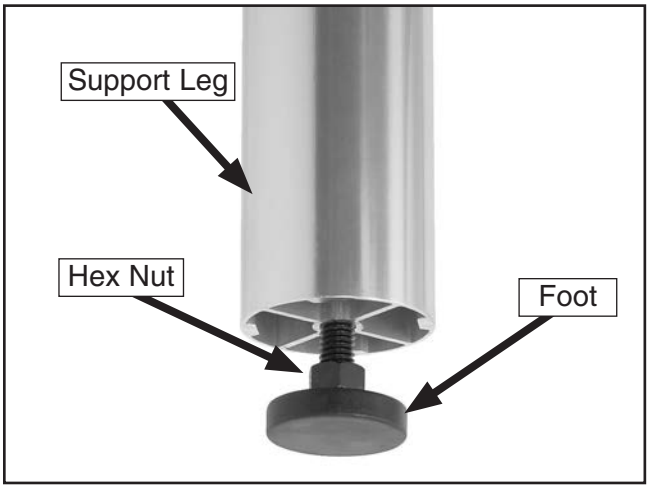

Figure 8. Foot installed on support leg.

9. Fasten (2) extension table support legs to main extension table with (8) M6-1 x 12 Phillips head screws and 6mm flat washers, as shown in **Figure 9**.

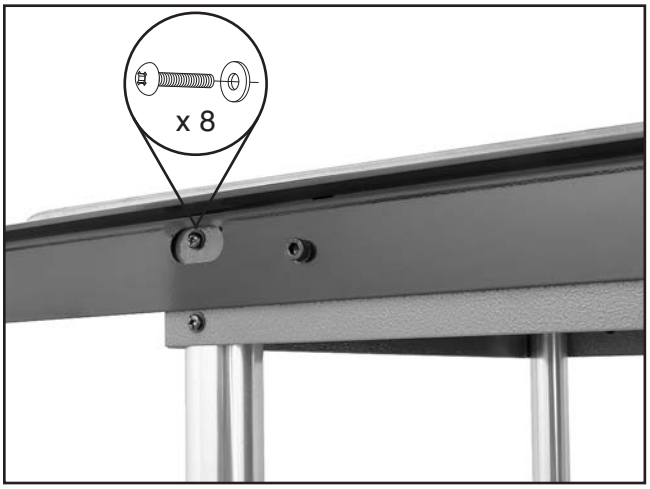

Figure 9. Support leg fastened to main extension table.

10. Rotate extension table leg feet until they touch the ground, and tighten hex nuts against support legs to secure feet.

11. Fasten shelf end plate to extension table legs with (4) M6-1 x 12 Phillips head screws and 6mm flat washers, as shown in **Figure 10**.

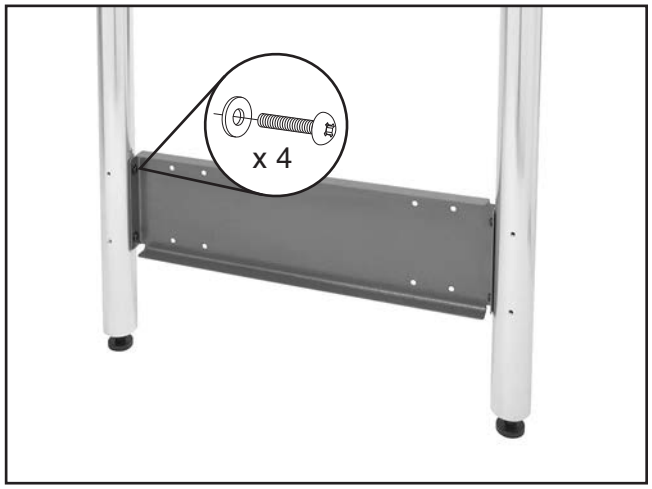

Figure 10. Installing shelf end plate on extension table legs.

12. Place (2) shelf brackets between cabinet and extension table support legs, and fasten with (2) M6-1 x 12 Phillip head screws, (2) M6-1 x 12 hex bolts, (4) 6mm flat washers and (2) M6-1 hex nuts, as shown in **Figure 11**.

    Note: *Flange on shelf bracket must point up to ensure proper installation.*

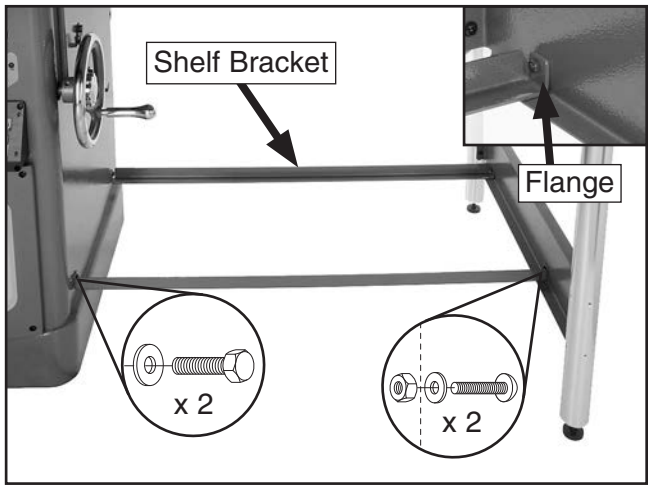

Figure 11. Shelf brackets installed.

13. Place extension table lower shelf on brackets.

14. Turn outfeed table upside down and place it on level surface.

15. Attach front outfeed table bracket to outfeed table with (8) M4 x 16 tap screws, and then repeat **Steps 8–11** to install outfeed table feet, support legs, and shelf end plate on outfeed table (see **Figure 12**).

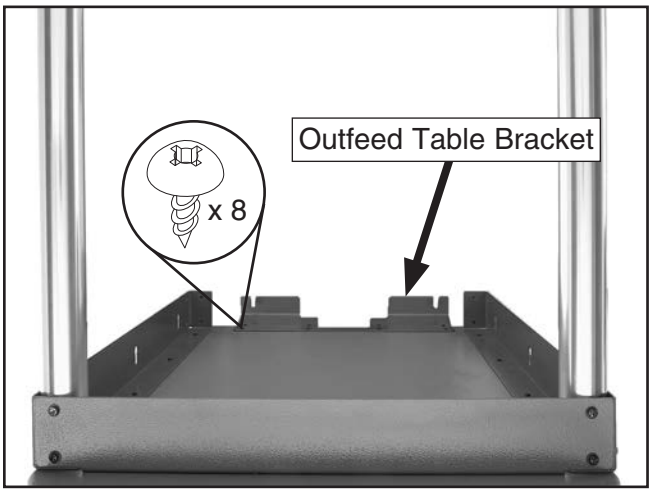

Figure 12. Front outfeed table bracket, feet, support legs, and shelf end plate attached to outfeed table.

Refer to **Steps 16–32** beginning on **Page 27** of the owner's manual to complete the assembly process.

READ THIS FIRST

Model G0651/G0652/G0941
******IMPORTANT UPDATE******
For Machines Mfd. Since 07/21,
Manual Insert Printed 10/20,
and Owner's Manual Revised 09/10

For questions or help with this product contact Tech Support at (570) 546-9663 or techsupport@grizzly.com

The following changes were made since the owner's manual was printed:

- Blade guard changed.
- Model G0651/G0652 extension tables now ship in Carton #1.

Aside from this information, all other content in the owner's manual applies and MUST be read and understood for your own safety. **IMPORTANT: Keep this update with the owner's manual for future reference.**

For questions or help, contact our Tech Support at (570) 546-9663 or techsupport@grizzly.com.

Revised G0651 Specifications

Shipping Dimensions:

Carton #1

Content ..... Machine & Extension Tables
Weight..... 660 lbs.
Length x Width x Height ..... 50 x 30 x 52 in.

Revised G0652 Specifications

Shipping Dimensions:

Carton #1

Content ..... Machine & Extension Tables
Weight..... 662 lbs.
Length x Width x Height ..... 50 x 30 x 52 in.

New Blade Guard

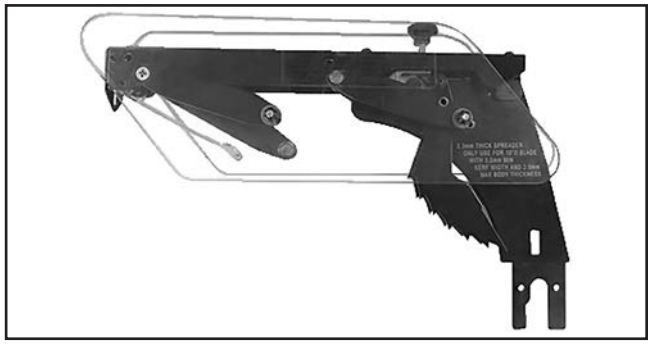

Old Blade Guard

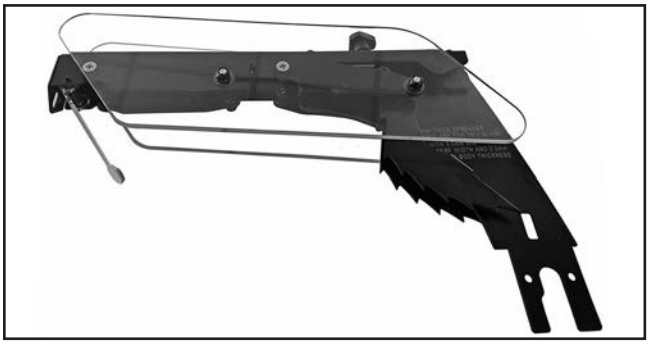

COPYRIGHT © MAY, 2021 BY GRIZZLY INDUSTRIAL, INC.
WARNING: NO PORTION OF THIS MANUAL MAY BE REPRODUCED IN ANY SHAPE OR FORM WITHOUT THE WRITTEN APPROVAL OF GRIZZLY INDUSTRIAL, INC.
#CS21892 PRINTED IN TAIWAN

Revised G0651/G0652 Blade Guard Parts

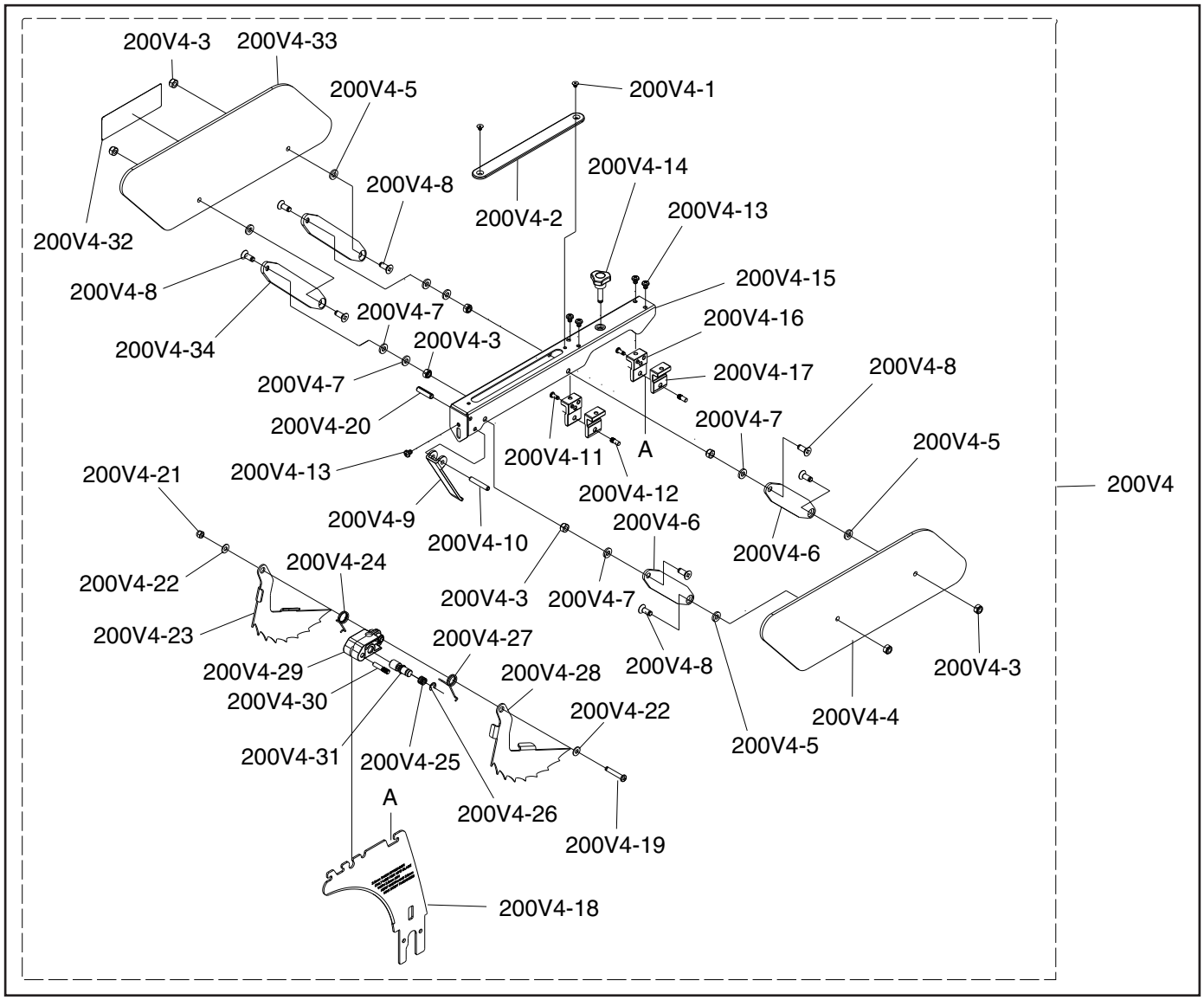

REF	PART #	DESCRIPTION
200V4	P0651200V4	BLADE GUARD ASSY V4.07.21
200V4-1	P0651200V4-1	FLAT HD SCR M4-.7 X 8
200V4-2	P0651200V4-2	UPPER COVER
200V4-3	P0651200V4-3	HEX NUT M6-1
200V4-4	P0651200V4-4	BLADE GUARD COVER (RIGHT)
200V4-5	P0651200V4-5	FLAT WASHER 6MM
200V4-6	P0651200V4-6	CONNECTING PLATE (RIGHT)
200V4-7	P0651200V4-7	FLAT WASHER 6MM
200V4-8	P0651200V4-8	FLAT HD SCR M6-1 X 16
200V4-9	P0651200V4-9	REAR COVER
200V4-10	P0651200V4-10	ROLL PIN 5 X 32
200V4-11	P0651200V4-11	PHLP HD SCR M4-.7 X 10
200V4-12	P0651200V4-12	MOUNTING PIN
200V4-13	P0651200V4-13	PHLP HD SCR M5-.8 X 6
200V4-14	P0651200V4-14	KNOB BOLT 3-LOBE, M6-1 X 35
200V4-15	P0651200V4-15	BLADE GUARD BODY
200V4-16	P0651200V4-16	MOUNTING BLOCK (LEFT)
200V4-17	P0651200V4-17	MOUNTING BLOCK (RIGHT)

REF	PART #	DESCRIPTION
200V4-18	P0651200V4-18	SPREADER
200V4-19	P0651200V4-19	PHLP HD SCR M5-.8 X 30
200V4-20	P0651200V4-20	ROLL PIN 5 X 45
200V4-21	P0651200V4-21	HEX NUT M5-.8
200V4-22	P0651200V4-22	FLAT WASHER 5MM
200V4-23	P0651200V4-23	ANTI-KICKBACK PAWL (LEFT)
200V4-24	P0651200V4-24	TORSION SPRING (LEFT)
200V4-25	P0651200V4-25	COMPRESSION SPRING
200V4-26	P0651200V4-26	E-CLIP 7MM
200V4-27	P0651200V4-27	TORSION SPRING (RIGHT)
200V4-28	P0651200V4-28	ANTI-KICKBACK PAWL (RIGHT)
200V4-29	P0651200V4-29	PAWL MOUNTING BRACKET
200V4-30	P0651200V4-30	PIN
200V4-31	P0651200V4-31	SHAFT
200V4-32	P0651200V4-32	BLADE GUARD WARNING LABEL
200V4-33	P0651200V4-33	BLADE GUARD COVER (LEFT)
200V4-34	P0651200V4-34	CONNECTING PLATE (LEFT)

Revised G0941 Blade Guard Parts

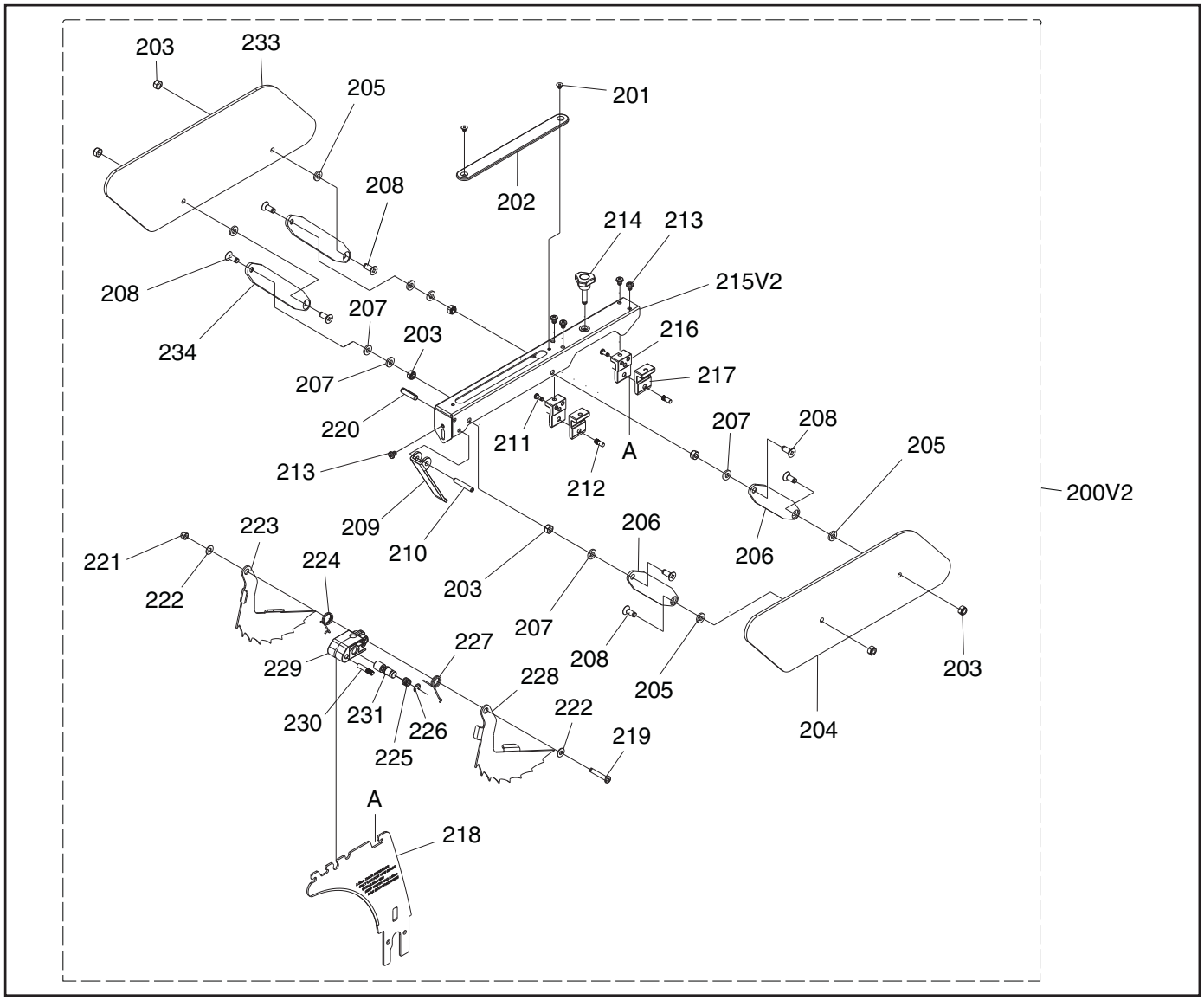

REF	PART #	DESCRIPTION
200V2	P0941200V2	BLADE GUARD ASSEMBLY V2.07.21
201	P0941201	FLAT HD SCR M4-.7 X 8
202	P0941202	UPPER COVER
203	P0941203	HEX NUT M6-1
204	P0941204	BLADE GUARD COVER (LEFT)
205	P0941205	FLAT WASHER 6MM THIN
206	P0941206	CONNECTING PLATE (RIGHT)
207	P0941207	FLAT WASHER 6MM
208	P0941208	FLAT HD SCR M6-1 X 16
209	P0941209	REAR COVER
210	P0941210	ROLL PIN 5 X 32
211	P0941211	PHLP HD SCR M4-.7 X 10
212	P0941212	MOUNTING PIN
213	P0941213	PHLP HD SCR M5-.8 X 6
214	P0941214	KNOB BOLT 3-LOBE, M6-1 X 35
215V2	P0941215V2	BLADE GUARD BODY V2.07.21
216	P0941216	MOUNTING BLOCK (LEFT)

REF	PART #	DESCRIPTION
217	P0941217	MOUNTING BLOCK (RIGHT)
218	P0941218	SPREADER
219	P0941219	PHLP HD SCR M5-.8 X 30
220	P0941220	ROLL PIN 5 X 45
221	P0941221	HEX NUT M5-.8
222	P0941222	FLAT WASHER 5MM
223	P0941223	ANTI-KICKBACK PAWL (LEFT)
224	P0941224	TORSION SPRING (LEFT)
225	P0941225	COMPRESSION SPRING
226	P0941226	E-CLIP 7MM
227	P0941227	TORSION SPRING (RIGHT)
228	P0941228	ANTI-KICKBACK PAWL (RIGHT)
229	P0941229	PAWL MOUNTING BRACKET
230	P0941230	PIN
231	P0941231	SHAFT
233	P0941233	BLADE GUARD COVER (LEFT)
234	P0941234	CONNECTING PLATE (LEFT)

grizzly.com®
TOOL WEBSITE

Buy Direct and Save with Grizzly® – Trusted, Proven and a Great Value!

~Since 1983~

Visit Our Website Today For Current Specials!

ORDER
24 HOURS A DAY!
1-800-523-4777

VISA MasterCard DISCOVER NOVUS AMERICAN EXPRESS

READ THIS FIRST

Grizzly Industrial, Inc.®

Model G0651 & G0652

******IMPORTANT UPDATE******

For Machines Mfd. Since 5/17
and Owner's Manual Revised 9/10

For questions or help with this product contact Tech Support at (570) 546-9663 or techsupport@grizzly.com

The following changes were recently made to this machine since the owner's manual was printed:

- Updated G0651 wiring diagram.
- Updated G0652 220V & 440V wiring diagrams.

Aside from this information, all other content in the owner's manual applies and MUST be read and understood for your own safety. **IMPORTANT: Keep this update with the owner's manual for future reference.**

For questions or help, contact our Tech Support at (570) 546-9663 or techsupport@grizzly.com.

Updated G0652 220V Motor Wiring

Updated G0652 440V Motor Wiring

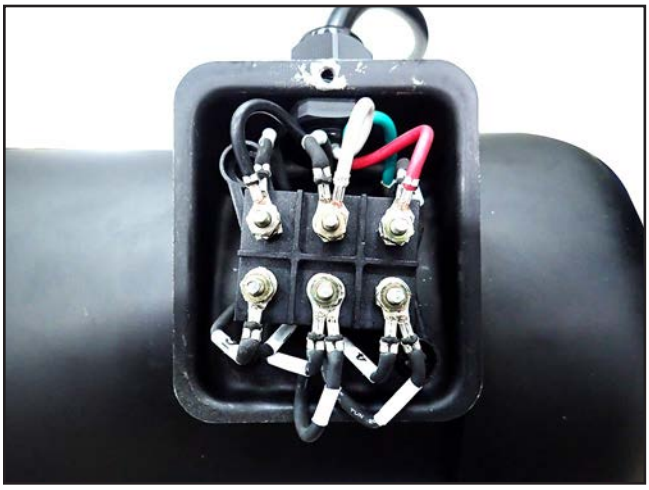

COPYRIGHT © MAY, 2017 BY GRIZZLY INDUSTRIAL, INC.
WARNING: NO PORTION OF THIS MANUAL MAY BE REPRODUCED IN ANY SHAPE OR FORM WITHOUT THE WRITTEN APPROVAL OF GRIZZLY INDUSTRIAL, INC.
#JH18980 PRINTED IN TAIWAN

Updated G0651 Wiring Diagram 220V, 1-Ph

(Replaces Page 84)

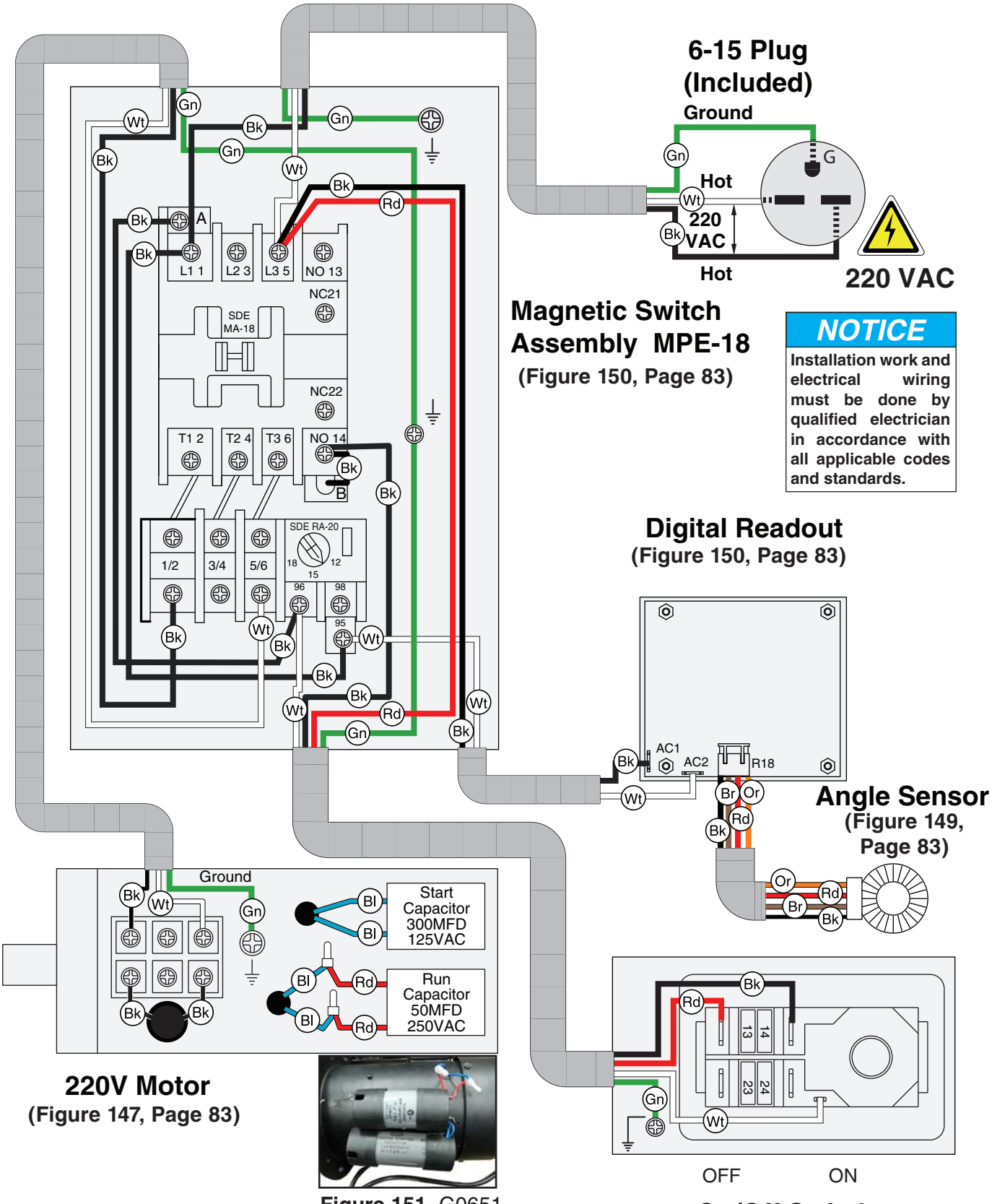

Figure 151. G0651 capacitors.

Updated G0652 Wiring Diagram 220V, 3-Ph

(Replaces Page 86)

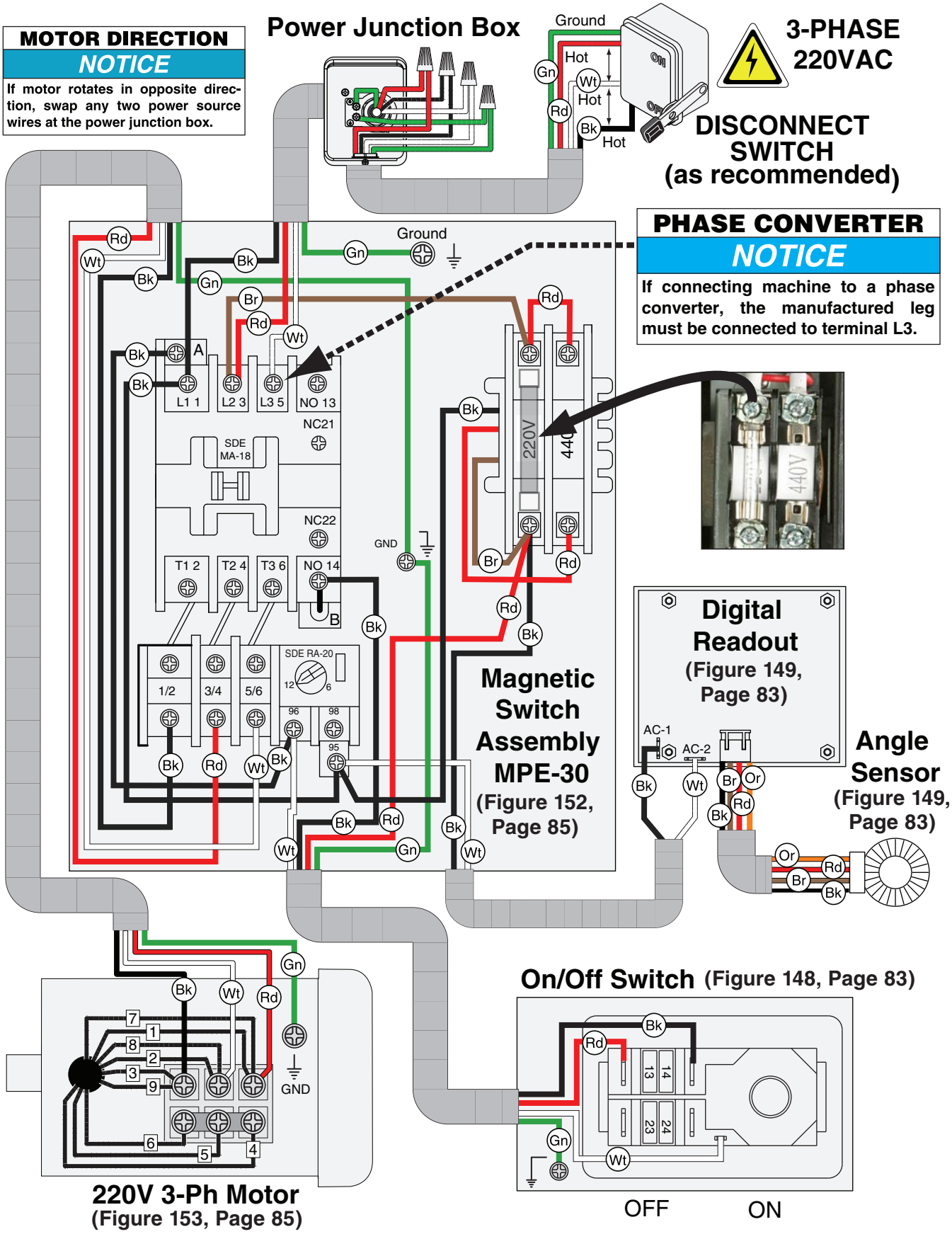

Updated G0652 Wiring Diagram 440V, 3-Ph

(Replaces Page 87)

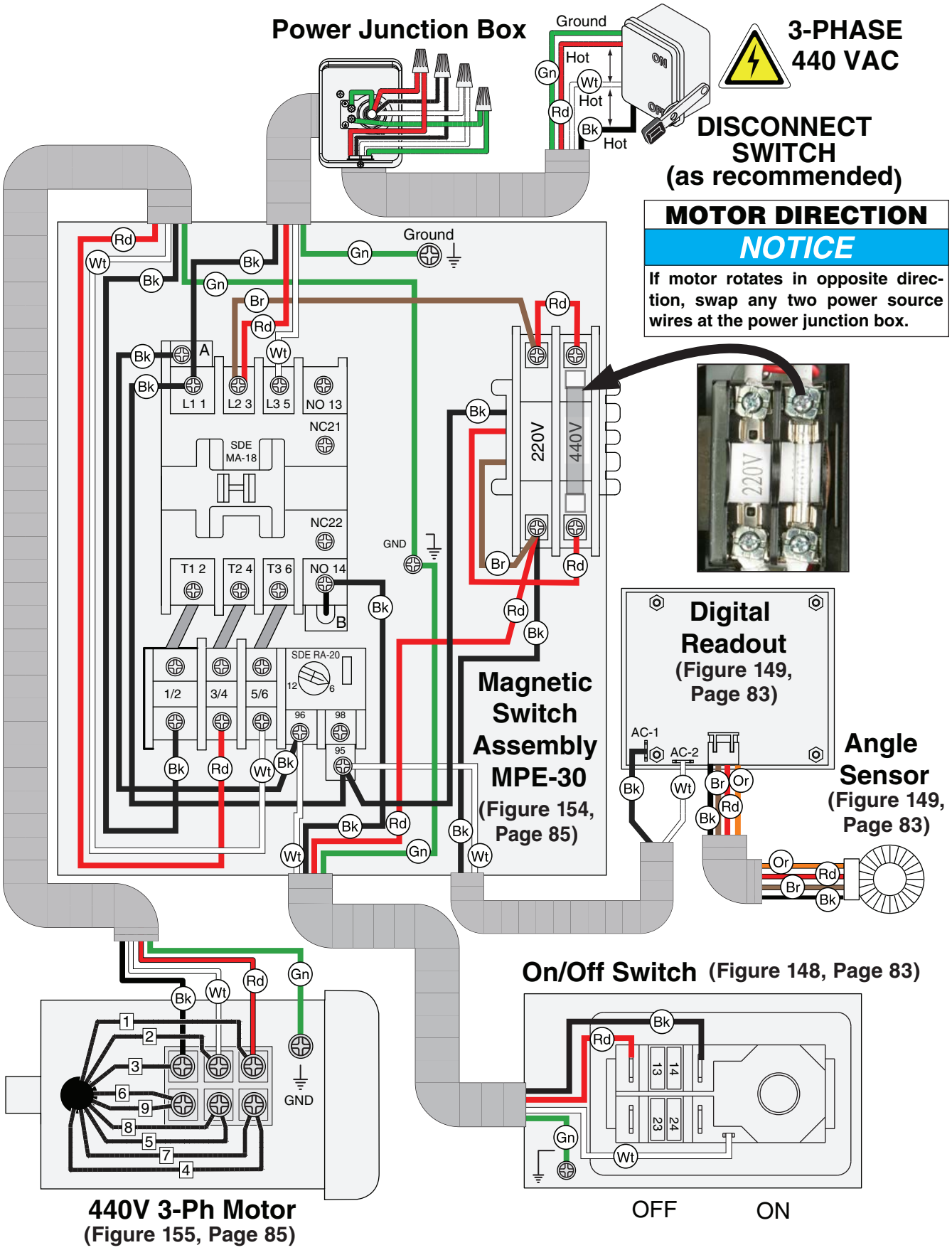

MODEL G0651/G0652
10" EXTREME SERIES
TABLE SAW W/RIVING KNIFE
OWNER'S MANUAL

COPYRIGHT © MARCH, 2008 BY GRIZZLY INDUSTRIAL, INC. REVISED SEPTEMBER, 2010 (BL)
WARNING: NO PORTION OF THIS MANUAL MAY BE REPRODUCED IN ANY SHAPE OR FORM WITHOUT THE WRITTEN APPROVAL OF GRIZZLY INDUSTRIAL, INC.
(FOR MODELS MANUFACTURED SINCE 1/10) #BL10437 PRINTED IN TAIWAN

⚠ WARNING!

This manual provides critical safety instructions on the proper setup, operation, maintenance and service of this machine/equipment.

Failure to read, understand and follow the instructions given in this manual may result in serious personal injury, including amputation, electrocution or death.

The owner of this machine/equipment is solely responsible for its safe use. This responsibility includes but is not limited to proper installation in a safe environment, personnel training and usage authorization, proper inspection and maintenance, manual availability and comprehension, application of safety devices, blade/cutter integrity, and the usage of personal protective equipment.

The manufacturer will not be held liable for injury or property damage from negligence, improper training, machine modifications or misuse.

⚠ WARNING!

Some dust created by power sanding, sawing, grinding, drilling, and other construction activities contains chemicals known to the State of California to cause cancer, birth defects or other reproductive harm. Some examples of these chemicals are:

- **Lead from lead-based paints.**
- **Crystalline silica from bricks, cement and other masonry products.**
- **Arsenic and chromium from chemically-treated lumber.**

Your risk from these exposures varies, depending on how often you do this type of work. To reduce your exposure to these chemicals: Work in a well ventilated area, and work with approved safety equipment, such as those dust masks that are specially designed to filter out microscopic particles.

Table of Contents

INTRODUCTION 2
Manual Accuracy 2
Contact Info 2
Machine Description 2
G0651 Machine Data Sheet 3
G0652 Machine Data Sheet 6
Identification 9

SECTION 1: SAFETY 10
Safety Instructions for Machinery 10
Additional Safety for Table Saws 12
Preventing Kickback 13
Protecting Yourself from Kickback 13
Glossary of Terms 14

SECTION 2: POWER SUPPLY 15
Correcting Phase Polarity (G0652) 18
Voltage Conversion 18
(G0652) 18

SECTION 3: SETUP 19
Setup Safety 19
Items Needed for Setup 19
Unpacking 19
Inventory 20
Hardware Recognition Chart 22
Cleanup 23
Site Considerations 24
Assembly 25
Dust Collection 29
Power Connection 30
Test Run 31
Final Setup 32
Recommended Adjustments 32

SECTION 4: OPERATIONS 33
Basic Controls 33
Operation Overview 34
Disabling & Locking Switch 34
Non-Through & Through Cuts 35
Stock Inspection 35
Blade Requirements 36
Blade Selection 36
Blade Installation 37
Blade Guard Assembly 38
Riving Knife 41
Cutting a Zero Clearance Insert 42
Ripping 43
Crosscutting 44
Miter Cuts 44
Blade Tilt/Bevel Cuts 45
Dado Cutting 45
Rabbet Cutting 48
Resawing 50

SECTION 5: SHOP MADE SAFETY ACCESSORIES 53
Featherboards 53
Push Sticks 56
Push Blocks 57
Narrow-Rip Auxiliary Fence & Push Block .. 58
Outfeed & Support Tables 60
Crosscut Sled 60

SECTION 6: AFTERMARKET ACCESSORIES FROM GRIZZLY 61

SECTION 7: MAINTENANCE 65
Schedule 65
Cleaning 65
Unpainted Cast Iron 65
Lubrication 66

SECTION 8: SERVICE 67
Troubleshooting 67
Blade Tilt Stops 69
Miter Slot to Blade 71
Parallelism 71
Blade Alignment 72
Spreader or Riving Knife Alignment 73
Fence Adjustments 75
Fence Scale Calibration 77
Miter Gauge Adjustments 78
Table Tilt Handwheel Backlash 79
Digital Readout Calibration 79
Belt Tension & Replacement 80

SECTION 9: WIRING 82
Wiring Safety Instructions 82
G0651/G0652 Electrical Components 83
G0651 Wiring Diagram 220V, 1-Ph 84
G0652 Electrical Components 85
G0652 Wiring Diagram 220V, 3-Ph 86
G0652 Wiring Diagram 440V, 3-Ph 87

SECTION 10: PARTS 88
Motor and Arbor Breakdown 88
Cabinet Breakdown 91
Blade Guard Breakdown 93
Fence Assembly Breakdown 94
Miter Gauge Breakdown 95
Extension Table Breakdown 96
Outfeed Table Breakdown 97
Label Placement 98

WARRANTY AND RETURNS 101

INTRODUCTION

Manual Accuracy

We are proud to offer this manual with your new machine! We've made every effort to be exact with the instructions, specifications, drawings, and photographs of the machine we used when writing this manual. However, sometimes we still make an occasional mistake.

Also, owing to our policy of continuous improvement, **your machine may not exactly match the manual**. If you find this to be the case, and the difference between the manual and machine leaves you in doubt, check our website for the latest manual update or call technical support for help.

Before calling, find the manufacture date of your machine by looking at the date stamped into the machine ID label (see below). This will help us determine if the manual version you received matches the manufacture date of your machine.

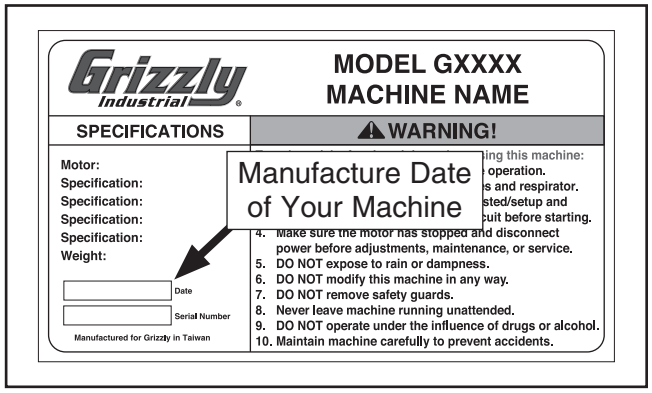

For your convenience, we post all available manuals and manual updates for free on our website at **www.grizzly.com**. Any updates to your model of machine will be reflected in these documents as soon as they are complete.

Contact Info

We stand behind our machines. If you have any service questions, parts requests or general questions about the machine, please call or write us at the location listed below.

Grizzly Industrial, Inc.
1203 Lycoming Mall Circle
Muncy, PA 17756
Phone: (570) 546-9663
E-Mail: techsupport@grizzly.com

We want your feedback on this manual. If you can take the time, please email or write to us at the address below and tell us how we did:

Grizzly Industrial, Inc.
C/O Technical Documentation Manager
P.O. Box 2069
Bellingham, WA 98227-2069
Email: manuals@grizzly.com

Machine Description

The table saw features a circular blade underneath the table that can be raised and lowered to control the depth of cut.

The rail-mounted fence, which slides freely toward or away from the blade, is used as the main cutting guide for the workpiece.

A miter gauge is used to guide and support the workpiece during the cut when the workpiece cannot slide against the fence in a stable manner. The miter gauge body can be rotated to allow a wide range of cutting angles.

The included blade guard assembly is equipped with a spreader and anti-kickback pawls, which work to prevent kickback and stop or slow kickback if it happens. The included riving knife is used when the guard is removed for certain non-through cuts.

MACHINE DATA SHEET

Customer Service #: (570) 546-9663 · To Order Call: (800) 523-4777 · Fax #: (800) 438-5901

MODEL G0651 10" 3 HP 220V HEAVY DUTY CABINET TABLE SAW WITH RIVING KNIFE

Product Dimensions:

Weight..... 602 lbs.
Width (side-to-side) x Depth (front-to-back) x Height..... 91-1/2 x 75 x 40-5/8 in.
Footprint (Length x Width)..... 22-7/8 x 21 in.
Space Required for Full Range of Movement (Width x Depth)..... 91-1/2 x 75 in.

Shipping Dimensions:

Carton #1

Type..... Wood Crate
Content..... Machine & Extension Tables
Weight..... 660 lbs.
Length x Width x Height..... 50 x 30 x 52 in.
Must Ship Upright..... Yes

Carton #2

Type..... Cardboard Box
Content..... Rails
Weight..... 90 lbs.
Length x Width x Height..... 96 x 7 x 9 in.
Must Ship Upright..... No

Carton #3

Type..... Cardboard Box
Content..... Fence
Weight..... 24 lbs.
Length x Width x Height..... 44 x 18 x 8 in.
Must Ship Upright..... No

Carton #4

Type..... Cardboard Box
Content..... Right & Rear Extension Table
Weight..... 136 lbs.
Length x Width x Height..... 29 x 44 x 11 in.
Must Ship Upright..... No

Electrical:

Power Requirement..... 220V, Single-Phase, 60 Hz
Prewired Voltage..... 220V
Full-Load Current Rating..... 13A
Minimum Circuit Size..... 15A
Connection Type..... Cord & Plug
Power Cord Included..... Yes
Power Cord Length..... 10 ft.
Power Cord Gauge..... 14 AWG
Plug Included..... Yes
Included Plug Type..... 6-15
Switch Type..... ON/OFF Push Button Switch w/Large Shut-Off Paddle & Padlock

Motors:

Main

Horsepower	3 HP
Phase	Single-Phase
Amps	13A
Speed	3450 RPM
Type	TEFC Capacitor-Start Induction
Power Transfer	Belt Drive
Bearings	Sealed & Permanently Lubricated
Centrifugal Switch/Contacts Type	External

Main Specifications:

Main Information

Table Saw Type	Cabinet
Maximum Blade Diameter	10 in.
Arbor Size	5/8 in.
Arbor Speed	4000 RPM
Maximum Width of Dado	3/4 in.
Blade Tilt Direction	Left
Max Blade Tilt	45 deg.
Maximum Depth of Cut At 90 Degrees	3-3/16 in.
Maximum Depth of Cut At 45 Degrees	2-3/16 in.
Max Rip Right of Blade w/Included Fence & Rails	52 in.
Max Rip Left of Blade w/Included Fence & Rails	18 in.

Additional Blade Information

Included Blade Information	10" x 40T
Riving Knife/Spreader Thickness	0.090 in.
Required Blade Body Thickness	0.074– 0.082 in.
Required Blade Kerf Thickness	0.114 – 0.122 in.
Rim Speed at Max Blade Diameter	10,500 FPM

Table Information

Floor to Table Height	34-7/8 in.
Table Size with Extension Wings Width	75-3/4 in.
Table Size with Extension Wings Depth	65-3/4 in.
Distance Front of Table to Center of Blade	14-7/8 in.
Distance Front of Table to Blade At Maximum Cut	10-5/16 in.
Main Table Size Thickness	1-1/2 in.

Fence Information

Fence Type	Camlock T-Shape w/Aluminum Face
Fence Size Length	40-1/4 in.
Fence Size Width	4-1/8 in.
Fence Size Height	2-1/2 in.
Fence Rail Type	Square Steel Tubing/Angle Iron
Fence Rail Length	91-1/2 in.
Fence Rail Width	3 in.
Fence Rail Height	2 in.

Miter Gauge Information

Miter Gauge Slot Type	T-Slot
Miter Gauge Slot Size Width	3/4 in.
Miter Gauge Slot Size Height	3/8 in.

Construction

Table..... Precision-Ground Cast Iron
Wings..... Precision-Ground Cast Iron
Cabinet..... Pre-Formed Steel
Trunnions..... Cast Iron
Fence Assembly..... Aluminum Extruded Body
Rails..... Steel
Miter Gauge Construction..... Aluminum Body with Steel Body
Guard..... Steel and Clear Plastic
Body/Cabinet Paint Type/Finish..... Powder Coated
Arbor Bearings..... Sealed & Permenantly Lubricated

Other Related Information

Number of Dust Ports..... 1
Dust Port Size..... 4 in.

Other Specifications:

Country of Origin ..... Taiwan
Warranty ..... 1 Year
Approximate Assembly & Setup Time ..... 1 Hour
ISO 9001 Factory ..... No
Certified by a Nationally Recognized Testing Laboratory (NRTL) ..... Yes

Features:

Quick-Release Blade Guard and Spreader
Riving Knife Included
Hinged Motor Cover
4" Dust Port
Comfortable Polished Chrome Handles
Heavy-Duty Miter Gauge
Smooth and Quiet Poly-V Serpentine Belt System
Precision-Ground Cast-Iron Table
Outfeed and Extension Tables w/Storage Shelves
Blade Angle Digital Readout
Large Rail-Mounted Switch
Heavy-Duty Legs
Optional Dado Insert
Included 10" x 40T Carbide-Tipped Blade

Accessories Recommended:

D3122 Push Stick
T21880 Dado Insert for G0651 and G0652
G2543 Saw Cleaner

MACHINE DATA SHEET

Customer Service #: (570) 546-9663 · To Order Call: (800) 523-4777 · Fax #: (800) 438-5901

MODEL G0652 10" 5 HP 3-PHASE HEAVY-DUTY CABINET TABLE SAW WITH RIVING KNIFE

Product Dimensions:

Weight..... 602 lbs.
Width (side-to-side) x Depth (front-to-back) x Height..... 91-1/2 x 75 x 40-5/8 in.
Footprint (Length x Width)..... 22-7/8 x 21 in.
Space Required for Full Range of Movement (Width x Depth)..... 91-1/2 x 75 in.

Shipping Dimensions:

Carton #1

Type..... Wood Crate
Content..... Machine & Extension Tables
Weight..... 662 lbs.
Length x Width x Height..... 50 x 30 x 52 in.
Must Ship Upright..... Yes

Carton #2

Type..... Wood Crate
Content..... Front & Rear Rails
Weight..... 88 lbs.
Length x Width x Height..... 96 x 7 x 9 in.
Must Ship Upright..... No

Carton #3

Type..... Cardboard Box
Content..... Fence
Weight..... 24 lbs.
Length x Width x Height..... 45 x 19 x 9 in.
Must Ship Upright..... No

Electrical:

Power Requirement..... 220V or 440V, 3-Phase, 60 Hz
Prewired Voltage..... 220V
Full-Load Current Rating..... 12A at 220V, 6A at 440V
Minimum Circuit Size..... 15A at 220V, 15A at 440V
Connection Type..... Permanent (Hardwire to Shutoff Switch)
Switch Type..... ON/OFF Push Button Switch w/Large Shut-Off Paddle & Padlock

Motors:

Main

Horsepower..... 5 HP
Phase..... 3-Phase
Amps..... 12A/6A
Speed..... 3450 RPM
Type..... TEFC Induction
Power Transfer ..... Belt Drive
Bearings..... Sealed & Permanently Lubricated
Centrifugal Switch/Contacts Type..... N/A

Main Specifications:

Main Information

Table Saw Type	Cabinet
Maximum Blade Diameter	10 in.
Arbor Size	5/8 in.
Arbor Speed	4000 RPM
Maximum Width of Dado	3/4 in.
Blade Tilt Direction	12/6A
Max Blade Tilt	45 deg.
Maximum Depth of Cut At 90 Degrees	3-3/16 in.
Maximum Depth of Cut At 45 Degrees	2-3/16 in.
Max Rip Right of Blade w/Included Fence & Rails	52 in.
Max Rip Left of Blade w/Included Fence & Rails	18 in.

Additional Blade Information

Included Blade Information	10" x 40T
Riving Knife/Spreader Thickness	0.090 in.
Required Blade Body Thickness	0.074 – 0.082 in.
Required Blade Kerf Thickness	0.114 – 0.122 in.
Rim Speed at Max Blade Diameter	10,500 FPM

Table Information

Floor to Table Height	34-7/8 in.
Table Size with Extension Wings Width	75-3/4 in.
Table Size with Extension Wings Depth	65-3/4 in.
Distance Front of Table to Center of Blade	14-7/8 in.
Distance Front of Table to Blade At Maximum Cut	10-5/16 in.
Main Table Size Thickness	1-1/2 in.

Fence Information

Fence Type	Camlock T-Shape w/Aluminum Face
Fence Size Length	40-1/4 in.
Fence Size Width	4-1/8 in.
Fence Size Height	2-1/2 in.
Fence Rail Type	Square Steel Tubing/Angle Iron
Fence Rail Length	91-1/2 in.
Fence Rail Width	3 in.
Fence Rail Height	2 in.

Miter Gauge Information

Miter Gauge Slot Type	T-Slot
Miter Gauge Slot Size Width	3/4 in.
Miter Gauge Slot Size Height	3/8 in.

Construction

Table	Precision-Ground Cast Iron
Wings	Precision-Ground Cast Iron
Cabinet	Pre-Formed Steel
Trunnions	Cast Iron
Fence Assembly	Aluminum Extruded Body
Rails	Steel
Miter Gauge Construction	Aluminum Body with Steel Body
Guard	Steel and Clear Plastic
Body/Cabinet Paint Type/Finish	Powder Coated
Arbor Bearings	Sealed & Permenantly Lubricated

Other Related Information

Number of Dust Ports	1
Dust Port Size	4 in.

Other Specifications:

Country of Origin	Taiwan
Warranty	1 Year
Approximate Assembly & Setup Time	1 Hour
Serial Number Location	ID Label
ISO 9001 Factory	No
Certified by a Nationally Recognized Testing Laboratory (NRTL)	Yes

Features:

Quick-Release Blade Guard and Spreader
Riving Knife Included
Hinged Motor Cover
4" Dust Port
Comfortable Polished Chrome Handles
Heavy-Duty Miter Gauge
Smooth and Quiet Poly-V Serpentine Belt System
Precision-Ground Cast-Iron Table
Outfeed and Extension Tables w/Storage Shelves
Blade Angle Digital Readout
Large Rail-Mounted Switch
Heavy-Duty Legs
Optional Dado Insert
Included 10" x 40T Carbide-Tipped Blade

Identification

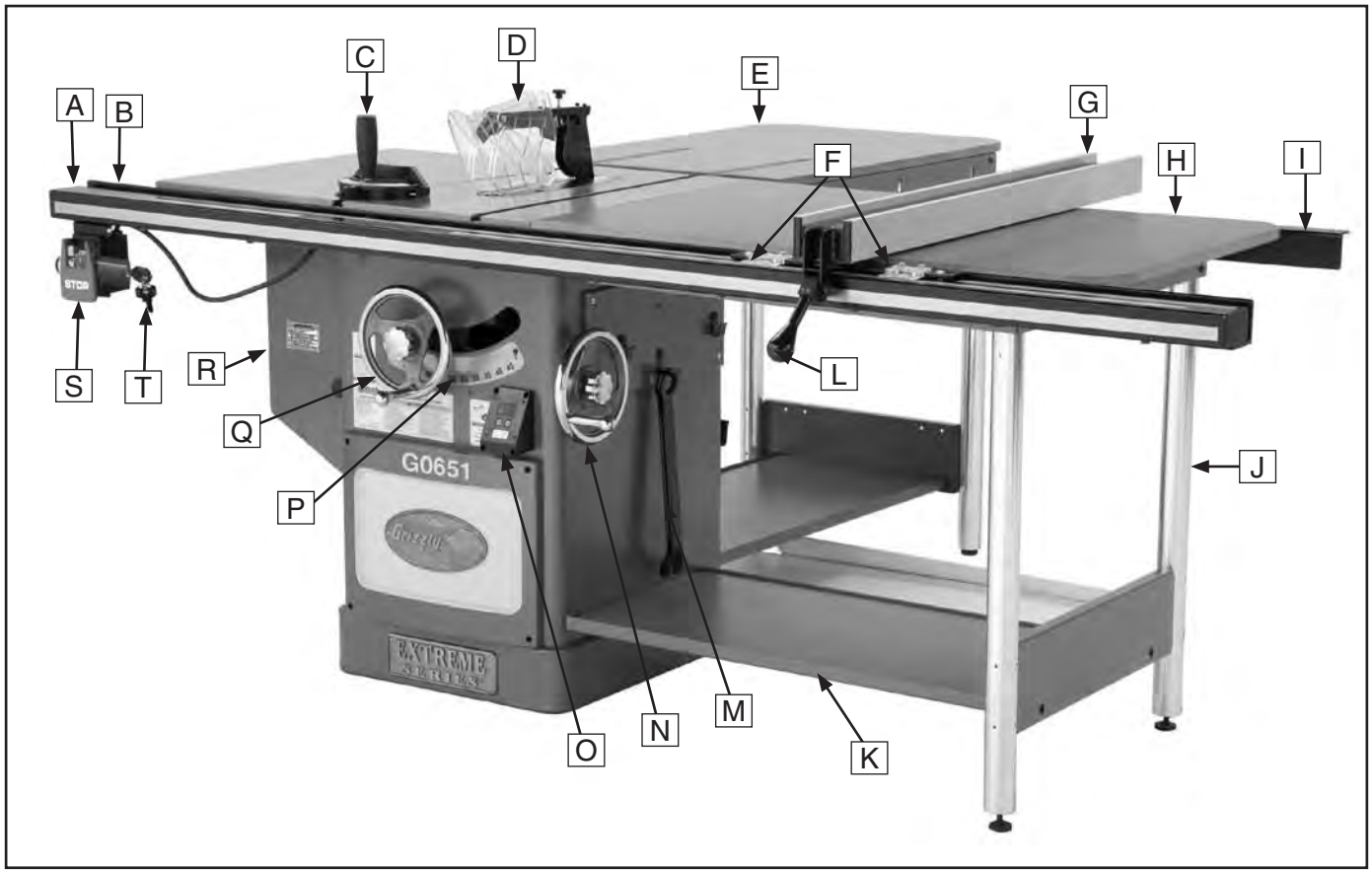

Figure 1. G0651 Identification.

A. Front Rail Tube
B. Front Rail
C. Miter Gauge
D. Blade Guard and Spreader
E. Outfeed Table
F. Fence Scale Indicator
G. Fence
H. Front (Main) Extension Table
I. Rear Rail
J. Support Leg
K. Lower Shelf
L. Fence Lock Handle
M. Arbor Wrench
N. Blade Tilt Handwheel & Lock
O. Blade Angle Digital Readout
P. Blade Tilt Scale
Q. Blade Height Handwheel
R. Motor Cover
S. ON/OFF Switch w/Emergency STOP Paddle
T. Switch Disabling Lock

⚠WARNING

For Your Own Safety Read Instruction Manual Before Operating Saw

a) Wear eye protection.
b) Use saw-blade guard and spreader for every operation for which it can be used, including all through sawing.
c) Keep hands out of the line of saw blade.
d) Use a push-stick when required.
e) Pay particular attention to instructions on reducing risk of kickback.
f) Do not perform any operation freehand.
g) Never reach around or over saw blade.

SECTION 1: SAFETY

⚠WARNING

For Your Own Safety, Read Instruction Manual Before Operating this Machine

The purpose of safety symbols is to attract your attention to possible hazardous conditions. This manual uses a series of symbols and signal words intended to convey the level of importance of the safety messages. The progression of symbols is described below. Remember that safety messages by themselves do not eliminate danger and are not a substitute for proper accident prevention measures.

⚠DANGER **Indicates an imminently hazardous situation which, if not avoided, WILL result in death or serious injury.**

⚠WARNING **Indicates a potentially hazardous situation which, if not avoided, COULD result in death or serious injury.**

⚠CAUTION **Indicates a potentially hazardous situation which, if not avoided, MAY result in minor or moderate injury. It may also be used to alert against unsafe practices.**

NOTICE **This symbol is used to alert the user to useful information about proper operation of the machine.**

⚠WARNING

Safety Instructions for Machinery

OWNER'S MANUAL. Read and understand this owner's manual BEFORE using machine. Untrained users can be seriously hurt.

EYE PROTECTION. Always wear ANSI-approved safety glasses or a face shield when operating or observing machinery to reduce the risk of eye injury or blindness from flying particles. Everyday eyeglasses are not approved safety glasses.

HAZARDOUS DUST. Dust created while using machinery may cause cancer, birth defects, or long-term respiratory damage. Be aware of dust hazards associated with each workpiece material, and always wear a NIOSH-approved respirator to reduce your risk.

WEARING PROPER APPAREL. Do not wear clothing, apparel, or jewelry that can become entangled in moving parts. Always tie back or cover long hair. Wear non-slip footwear to avoid accidental slips which could cause a loss of workpiece control.

HEARING PROTECTION. Always wear hearing protection when operating or observiing loud machinery. Extended exposure to this noise without hearing protection can cause permanent hearing loss.

MENTAL ALERTNESS. Be mentally alert when running machinery. Never operate under the influence of drugs or alcohol, when tired, or when distracted.

⚠WARNING

DISCONNECTING POWER SUPPLY. Always disconnect machine from power supply before servicing, adjusting, or changing cutting tools (bits, blades, cutters, etc.). Make sure switch is in OFF position before reconnecting to avoid an unexpected or unintentional start.

APPROVED OPERATION. Untrained operators can be seriously hurt by machinery. Only allow trained or properly supervised people to use machine. When machine is not being used, disconnect power, remove switch keys, or lock-out machine to prevent unauthorized use—especially around children. Make workshop kid proof!

DANGEROUS ENVIRONMENTS. Do not use machinery in wet or rainy locations, cluttered areas, around flammables, or in poorly-lit areas. Keep work area clean, dry, and well-lighted to minimize risk of injury.

ONLY USE AS INTENDED. Only use machine for its intended purpose. Never modify or alter machine for a purpose not intended by the manufacturer or serious injury may result!

USE RECOMMENDED ACCESSORIES. Consult this owner's manual or the manufacturer for recommended accessories. Using improper accessories will increase the risk of serious injury.

CHILDREN & BYSTANDERS. Keep children and bystanders a safe distance away from work area. Stop using machine if children or bystanders become a distraction.

REMOVE ADJUSTING TOOLS. Never leave adjustment tools, chuck keys, wrenches, etc. in or on machine—especially near moving parts. Verify removal before starting!

SECURING WORKPIECE. When required, use clamps or vises to secure workpiece. A secured workpiece protects hands and frees both of them to operate the machine.

FEED DIRECTION. Unless otherwise noted, feed work against the rotation of blades or cutters. Feeding in the same direction of rotation may pull your hand into the cut.

FORCING MACHINERY. Do not force machine. It will do the job safer and better at the rate for which it was designed.

GUARDS & COVERS. Guards and covers can protect you from accidental contact with moving parts or flying debris. Make sure they are properly installed, undamaged, and working correctly before using machine.

NEVER STAND ON MACHINE. Serious injury or accidental contact with cutting tool may occur if machine is tipped. Machine may be damaged.

STABLE MACHINE. Unexpected movement during operations greatly increases the risk of injury and loss of control. Verify machines are stable/secure and mobile bases (if used) are locked before starting.

AWKWARD POSITIONS. Keep proper footing and balance at all times when operating machine. Do not overreach! Avoid awkward hand positions that make workpiece control difficult or increase the risk of accidental injury.

UNATTENDED OPERATION. Never leave machine running while unattended. Turn machine ***OFF*** and ensure all moving parts completely stop before walking away.

MAINTAIN WITH CARE. Follow all maintenance instructions and lubrication schedules to keep machine in good working condition. An improperly maintained machine may increase the risk of serious injury.

CHECK DAMAGED PARTS. Regularly inspect machine for damaged parts, loose bolts, mis-adjusted or mis-aligned parts, binding, or any other conditions that may affect safe operation. Always repair or replace damaged or mis-adjusted parts before operating machine.

EXPERIENCING DIFFICULTIES. If at any time you are experiencing difficulties performing the intended operation, stop using the machine! Contact our Technical Support Department at (570) 546-9663.

Additional Safety for Table Saws

⚠WARNING

HAND POSITIONING. Never purposely touch a saw blade during operation. Always keep hands/fingers out of the blade path; place them where they cannot slip into the blade accidentally. Never reach around, behind, or over the blade. Touching a spinning saw blade will cause serious laceration or amputation injuries.

BLADE GUARD. Use the blade guard for all "through cuts" for which it can be used. (A through cut is an operation where the blade cuts completely through the top of the workpiece.) Make sure the blade guard is installed and adjusted correctly; promptly repair or replace it if damaged. Always re-install blade guard immediately after operations that require its removal. Operating saw with the blade guard removed greatly increases the risk of severe laceration or amputation injuries from accidental blade contact.

RIVING KNIFE. Use the riving knife for all "non-through cuts" for which it can be used. (A non-through cut is an operation where the blade does not cut through the top of the workpiece.) Make sure the riving knife is aligned and positioned correctly; and promptly repair or replace it if damaged. Using the riving knife incorrectly will increase the risk of kickback or accidental blade contact.

KICKBACK. Kickback occurs when the saw blade ejects the workpiece back toward the operator. Know how to reduce the risk of kickback, and learn how to protect yourself if it does occur.

FEEDING WORKPIECE. Feeding the workpiece incorrectly will increase risk of kickback. Never start the saw with a workpiece touching the blade; allow the blade to reach full speed before cutting. Only feed the workpiece against the direction of blade rotation. Always use some type of guide (fence, miter gauge, sliding table or sled, etc.) to feed the workpiece in a straight line. Never back a workpiece out of a cut or try to move it backwards or sideways after starting a cut. Feed cuts all the way through to completion. Never perform any operation "freehand" (making a cut without using a fence, miter gauge, or other guide).

FENCE. Make sure the fence remains properly adjusted and parallel with the blade. Always lock the fence in place before using. Using or adjusting the fence incorrectly will increase risk of kickback.

PUSH STICKS/BLOCKS. Use push sticks or push blocks whenever possible to keep your hands farther away from the blade while cutting; in the event of an accident these devices will often take damage that would have happened to hands/fingers.

CUT-OFF PIECES. Never use your hands to move cut-offs away from the blade while the saw is running. If a cut-off becomes trapped between the blade and table insert, turn the saw ***OFF*** and allow the blade to completely stop before removing it.

BLADE ADJUSTMENTS. Adjusting the blade height or tilt during operation increases the risk of crashing the blade and sending metal fragments flying with deadly force at the operator or bystanders. Only adjust the blade height and tilt when the blade is completely stopped and the saw is ***OFF***.

CHANGING BLADES. Always disconnect power before changing blades. Changing blades while the saw is connected to power greatly increases the injury risk if saw is accidentally powered up.

DAMAGED SAW BLADES. Never use blades that have been dropped or otherwise damaged. Damaged blades can fly apart and strike the operator with shards of metal.

DADO AND RABBET OPERATIONS. DO NOT attempt dado or rabbeting operations without first reading those sections in this manual. Dado and rabbeting operations require special attention because they must be performed with the blade guard removed.

CUTTING CORRECT MATERIAL. Never cut materials not intended for this saw; only cut natural and man-made wood products, laminate covered wood products, and some plastics. Cutting metal, glass, stone, tile, etc. increases the risk of operator injury due to kickback or flying particles.

Preventing Kickback

Take the precautions below to avoid the most common causes of kickback:

- Only cut workpieces with at least one smooth and straight edge. DO NOT cut warped, cupped or twisted wood.
- Never attempt freehand cuts. If the workpiece is not fed parallel with the blade, kickback will likely occur. Always use the rip fence or miter gauge to support the workpiece.
- Make sure the spreader or riving knife is aligned with the blade. A misaligned spreader or riving knife can cause the workpiece to catch or bind, increasing the chance of kickback. If you think that your spreader or riving knife is not aligned with the blade, check it immediately!
- Take the time to check and adjust the rip fence parallel with the blade; otherwise, the chances of kickback are extreme.
- The spreader or riving knife maintains the kerf in the workpiece, reducing the chance of kickback. Always use the riving knife for all non-through operations, unless a dado blade is installed. Always use the spreader with the blade guard for all through cuts.
- Feed cuts through to completion. Anytime you stop feeding a workpiece in the middle of a cut, the chance of kickback is greatly increased.
- Keep the blade guard installed and in good working order. Only remove it when performing non-through cuts and immediately re-install the blade guard when finished. Remember, always use the riving knife for all non-through operations, unless a dado blade is installed.
- Make multiple, shallow passes when performing a non-through cut. Making a deep non-through cut will greatly increase the chance of kickback.

⚠WARNING

Statistics show that most common accidents among table saw users can be linked to kickback. Kickback is typically defined as the high-speed expulsion of stock from the table saw toward its operator. In addition to the danger of the operator or others in the area being struck by the flying stock, it is often the case that the operator's hands are pulled into the blade during the kickback.

Protecting Yourself from Kickback

Even if you know how to prevent kickback, it may still happen. Take these precautions to protect yourself if kickback DOES occur:

- Stand to the side of the blade during every cut. If kickback does occur, the thrown workpiece usually travels directly in front of the blade.
- Wear safety glasses or a face shield. In the event of kickback, your eyes and face are the most vulnerable part of your body.
- Never, for any reason, place your hand behind the blade. Should kickback occur, your hand will be pulled into the blade.
- Use a push stick to keep your hands farther away from the moving blade. If kickback occurs, the push stick will most likely take the damage that your hand would have received.
- Use featherboards or anti-kickback devices to prevent or slow down kickback.

Glossary of Terms

The following is a list of common definitions, terms and phrases used throughout this manual as they relate to this table saw and woodworking in general. Become familiar with these terms for assembling, adjusting or operating this machine. Your safety is **VERY** important to us at Grizzly!

ARBOR: A metal shaft extending from the drive mechanism that is the mounting location for the saw blade.

BEVEL EDGE CUT: A cut made with the blade tilted to an angle between 0˚ and 45˚ to cut a beveled edge onto a workpiece. Refer to **Page 45** for more details.

BLADE GUARD ASSEMBLY: Metal or plastic safety device that mounts over the saw blade. Its function is to prevent the operator from coming into contact with the saw blade. Refer to **Page 38** for more details.

CROSSCUT: Cutting operation in which the crosscut fence is used to cut across the shortest width of the workpiece. Refer to **Page 44** for more details.

DADO BLADE: Blade or set of blades that are used to cut grooves and rabbets.

DADO CUT: Cutting operation that uses a dado blade to cut a flat bottomed groove into the face of the workpiece. Refer to **Page 45** for more details.

FEATHERBOARD: Safety device used to keep the workpiece against the rip fence and against the table surface. Refer to **Page 53** for more details.

KERF: The resulting cut or gap in the workpiece after the saw blade passes through during a cutting operation.

KICKBACK: An event in which the workpiece is propelled back towards the operator at a high rate of speed.

NON-THROUGH CUT: A cut in which the blade does not cut through the top of the workpiece. Refer to **Page 35** for more details.

PARALLEL: Being an equal distance apart at every point along two given lines or planes (i.e. the rip fence face is parallel to the face of the saw blade).

PERPENDICULAR: Lines or planes that intersect and form right angles (i.e. the blade is perpendicular to the table surface).

PUSH STICK: Safety device used to push the workpiece through a cutting operation. Used most often when rip cutting thin workpieces. Refer to **Page 56** for more details.

RABBET: Cutting operation that creates an L-shaped channel along the edge of the workpiece. Refer to **Page 48** for more details.

RIP CUT: Cutting operation in which the rip fence is used to cut across the widest width of the workpiece. Refer to **Page 43** for more details.

RIVING KNIFE: Metal plate located behind the blade. It maintains the kerf opening in the wood when performing a cutting operation. Refer to **Page 41** for more details.

SPREADER: Metal plate located behind the blade. Maintains kerf opening in wood when performing a cutting operation. Acts as a barrier behind blade to shield hands from being pulled into the blade if a kickback occurs.

STRAIGHTEDGE: A tool used to check the flatness, parallelism, or consistency of a surface(s).

THIN KERF BLADE: A blade with a kerf or thickness that is thinner than a standard blade cannot be used on this saw.

THROUGH CUT: A cut in which the blade cuts completely through the workpiece (refer to **Page 35**).

SECTION 2: POWER SUPPLY

Availability

Before installing the machine, consider the availability and proximity of the required power supply circuit. If an existing circuit does not meet the requirements for this machine, a new circuit must be installed. To minimize the risk of electrocution, fire, or equipment damage, installation work and electrical wiring must be done by a qualified electrician in accordance with all applicable codes and standards.

⚠WARNING

Electrocution, fire, or equipment damage may occur if machine is not correctly grounded and connected to the power supply.

Full-Load Current Rating

The full-load current rating is the amperage a machine draws at 100% of the rated output power. On machines with multiple motors, this is the amperage drawn by the largest motor or sum of all motors and electrical devices that might operate at one time during normal operations.

G0651 Full-Load Current at 220V ..... 13 Amps
G0652 Full-Load Current at 220V ..... 12 Amps
G0652 Full-Load Current at 440V ..... 6 Amps

The full-load current is not the maximum amount of amps that the machine will draw. If the machine is overloaded, it will draw additional amps beyond the full-load rating.

If the machine is overloaded for a sufficient length of time, damage, overheating, or fire may result—especially if connected to an undersized circuit. To reduce the risk of these hazards, avoid overloading the machine during operation and make sure it is connected to a power supply circuit that meets the requirements in the following section.

Circuit Information

A power supply circuit includes all electrical equipment between the main breaker box or fuse panel in your building and the incoming power connections at the machine. This circuit must be sized to safely handle the full-load current drawn from the machine for an extended period of time.

⚠CAUTION

For your own safety and protection of property, consult a qualified electrician if you are unsure about wiring practices or electrical codes in your area.

Note: *The circuit requirements listed in this manual apply to a dedicated circuit—where only one machine will be running at a time. If this machine will be connected to a shared circuit where multiple machines will be running at the same time, consult a qualified electrician to ensure that the circuit is properly sized for safe operation.*

G0651 Circuit Requirements

This machine is prewired to operate on a 220V power supply circuit that has a verified ground and meets the following requirements:

Nominal Voltage 220V/240V
Cycle .....60 Hz
Phase 1-Phase
Circuit Rating ..... 15 Amps
Plug/Receptacle ..... NEMA 6-15
Cord .....3-Wire, 14 AWG, 300VAC, "S"-Type

G0652 Circuit Requirements

This machine is prewired to operate on a 220V power supply circuit that has a verified ground and meets the following requirements:

Nominal Voltage 220V/240V
Cycle .....60 Hz
Phase 3-Phase
Circuit Rating ..... 15 Amps
Connection..... Hardwire with Locking Switch

This machine can be converted to operate on a 440V power supply. **Voltage Conversion** instructions are provided later in this manual. The intended 440V circuit must have a verified ground and meet the requirements that follow:

Nominal Voltage 440V/480V
Cycle .....60 Hz
Phase 3-Phase
Rated Size ..... 15 Amps
Connection..... Hardwire with Locking Switch

Grounding Instructions

In the event of certain types of malfunctions or breakdowns, grounding provides a path of least resistance for electric current—in order to reduce the risk of electric shock.

Improper connection of the equipment-grounding wire can result in a risk of electric shock. The wire with green insulation (with or without yellow stripes) is the equipment-grounding wire. If repair or replacement of the power cord or plug is necessary, do not connect the equipment-grounding wire to a live (current carrying) terminal.

Check with a qualified electrician or service personnel if you do not understand these grounding requirements, or if you are in doubt about whether the tool is properly grounded. If you ever notice that a cord or plug is damaged or worn, disconnect it from power, and immediately replace it with a new one.

⚠WARNING

Serious injury could occur if you connect the machine to power before completing the setup process. DO NOT connect to power until instructed later in this manual.

G0651 Connection Device

The power cord and plug specified under "G0651 Circuit Requirements" on the previous page have an equipment-grounding wire and a grounding prong. The plug must only be inserted into a matching receptacle (outlet) that is properly installed and grounded in accordance with all local codes and ordinances (see figure below).

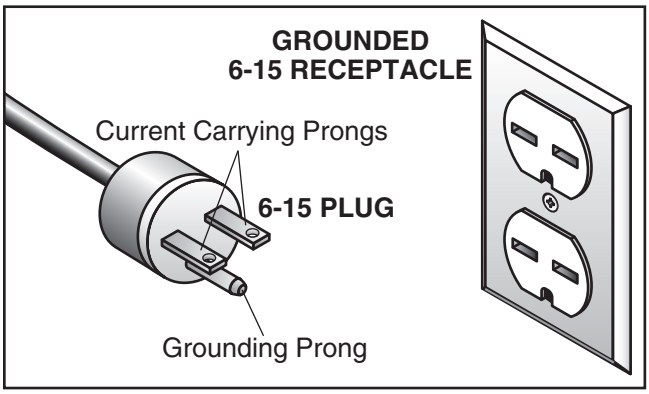

Figure 2. Typical 6-15 plug and receptacle.

NOTICE

No adapter is available or should be used with this machine. If the machine must be reconnected for use on a different type of electric circuit, the reconnection should be made by qualified service personnel; and after reconnection, the machine must comply with all local codes and ordinances.

G0652 Connection Device

As specified in "Circuit Requirements" on the previous pages, the machine must be hardwired to the power source, using a locking switch as a disconnecting means (see below). The machine must also be connected to a grounded metal permanent wiring system; or to a system having an equipment-grounding conductor. Due to the complexity and high voltage involved, this type of installation MUST be done by a qualified electrician.

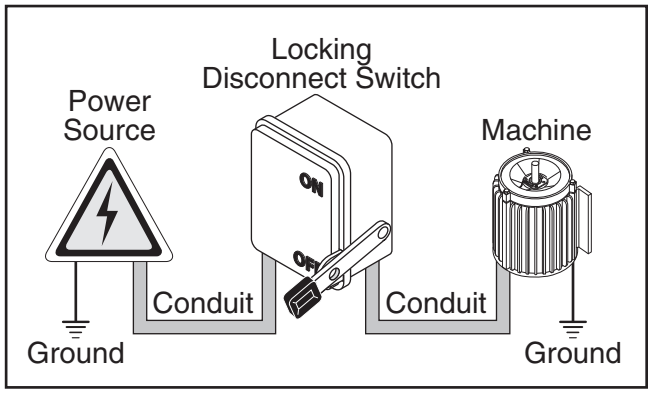

Figure 3. Typical hardwire setup with a locking disconnect switch.

Extension Cords (G0651 Only)

We do not recommend using an extension cord with this machine. If you must use an extension cord, only use it if absolutely necessary and only on a temporary basis.

Extension cords cause voltage drop, which may damage electrical components and shorten motor life. Voltage drop increases as the extension cord size gets longer and the gauge size gets smaller (higher gauge numbers indicate smaller sizes).

Any extension cord used with this machine must contain a ground wire, match the required plug and receptacle, and meet the following requirements:

Minimum Gauge Size .....12 AWG
Maximum Length (Shorter is Better).....50 ft.

The extension cord table below is provided per UL987 requirements. It is a generic guideline for determining the correct size of extension cord to use, depending on the cord length and full-load ampere rating of a machine. If you are in doubt about the cord size recommended by this table, use the next heavier gauge. (The smaller the gauge number, the heavier the cord.) When using this table, ignore all information that does not apply to the machine (for example, if the machine is wired for 240V, ignore all 120V information).

Ampere Rating		Volts	Total Length of Cord in Feet			
		120V	25	50	100	150
		240V	50	100	200	300
More Than	Not More Than	AWG				
0	6		18	16	16	14
6	10		18	16	14	12
10	12		16	16	14	12
12	16		14	12	Not Recomended	

Correcting Phase Polarity (G0652)

This sub-section is only provided for trouble-shooting. If you discover during the test run that the table saw will not operate, or that the blade runs backwards, the table saw may be wired out of phase. Without the proper test equipment to determine the phase polarity of power source legs, wiring machinery to 3-phase power may require trial-and-error. Correcting this is simply a matter of reversing the positions where two of the incoming power source wires are connected.

To correct wiring that is out of phase:

1. Push the stop button and disconnect the machine or shut OFF and lock out the power source if hardwired.

2. Remove the junction box cover (**Figure 33** on **Page 30**) on the rear of the cabinet and remove the wire nuts shown in **Figure 4.**

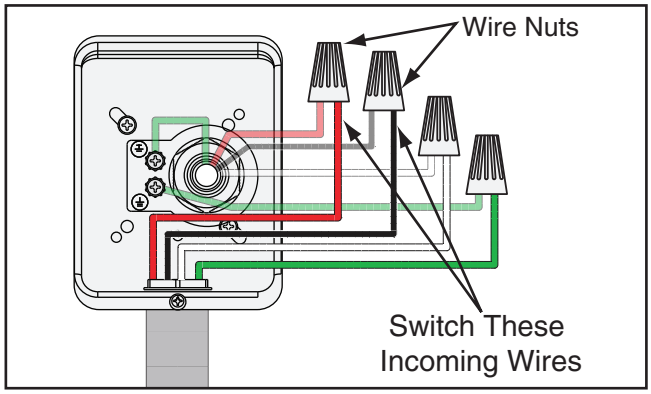

Figure 4. Example of switching incoming power wires.

3. Switch any two of the incoming power wires.

   For example: Connect the red incoming wire with the black wire coming from the junction box using a wire nut (see **Figure 4**). Then connect the black incoming wire with the red wire coming from the junction box using a wire nut.

4. Wrap each of the wire nuts and their wires with electrical tape to secure them, re-install the junction box cover, then reconnect the machine to the power source.

Voltage Conversion (G0652)

The Model G0652 can be converted for 440V operation. This conversion job consists of disconnecting the saw from the power source, rewiring the motor, switching the transformer fuse from 220V to 440V, and changing the thermal overload relay from 12 to 6 Amps. Refer to the photos and wiring diagram on **Pages 85** and **87** for wiring details.

To minimize the risk of electrocution, fire, or equipment damage, installation work and electrical wiring must be done by a qualified electrician in accordance with all applicable codes and standards. If, at anytime during this procedure you need help, call Grizzly Tech Support at (570) 546-9663.

To rewire the Model G0652:

1. DISCONNECT SAW FROM POWER!

2. Open the motor cover.

3. Remove the motor junction box cover, rewire the motor as shown on the diagram located inside the junction box, then re-install the cover.

   Note: *The reference wiring diagram on **Page 87** was current at the time of printing, but always use the wiring diagram provided inside the motor junction box, as it will reflect any changes to the motor shipped with your machine.*

4. Remove the magnetic switch cover and move the fuse on the fuse block from the 220V slot to the 440V slot (refer to the photos on **Page 85** and wiring diagram on **Page 87** for wiring details.

5. Turn the thermal overload relay dial from 12 to 6 Amps.

6. Re-install the magnetic switch cover, then close and secure the motor cover.

SECTION 3: SETUP

Setup Safety

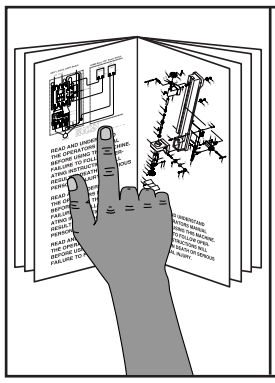

WARNING

This machine presents serious injury hazards to untrained users. Read through this entire manual to become familiar with the controls and operations before starting the machine!

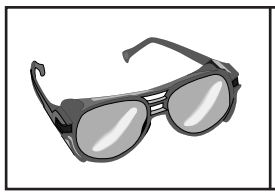

WARNING

Wear safety glasses during the entire setup process!

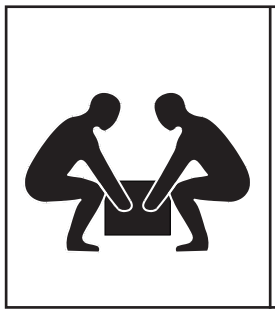

WARNING

This machine and its components are very heavy. Get lifting help or use power lifting equipment such as a forklift to move heavy items.

Items Needed for Setup

The following items are needed to complete the setup process, but are not included with the machine:

Description	Qty
• Straightedge 36" (or longer)	1
• Straightedge 12" (or longer)	1
• Level	1
• Hex Wrench 3mm	1
• Safety Glasses (for each person)	1
• Dust Collection System	1
• Dust Hose 4" (length as needed)	1
• Hose Clamp 4"	1
• Assistant for Lifting Help	1
• Piece of Scrap Wood (2" Minimum Thickness & 75¾" Long)	1
• Clamps	2

Unpacking

Your machine was carefully packaged for safe transportation. Remove the packaging materials from around your machine and inspect it. If you discover the machine is damaged, *please immediately call Customer Service at (570) 546-9663 for advice.*

Save the containers and all packing materials for possible inspection by the carrier or its agent. *Otherwise, filing a freight claim can be difficult.*

When you are completely satisfied with the condition of your shipment, inventory the contents.

Inventory

The following is a description of the main components shipped with your machine. Lay the components out to inventory them.

Note: *If you can't find an item on this list, check the mounting location on the machine or examine the packaging materials carefully. Occasionally we pre-install certain components for shipping purposes.*

Table Saw Unit

Box Contents (Figure 5 & 6): Qty

A. Table Saw Unit (not shown) 1
B. Spreader/Guard Assembly 1
C. Push Stick 1
D. Fence Resting Brackets 2
E. Miter Gauge 1
F. Miter Gauge Handle 1
G. Handwheel Handles 2
H. Arbor Wrenches 2
I. Switch Disabling Lock 1
J. Blade 10" 1

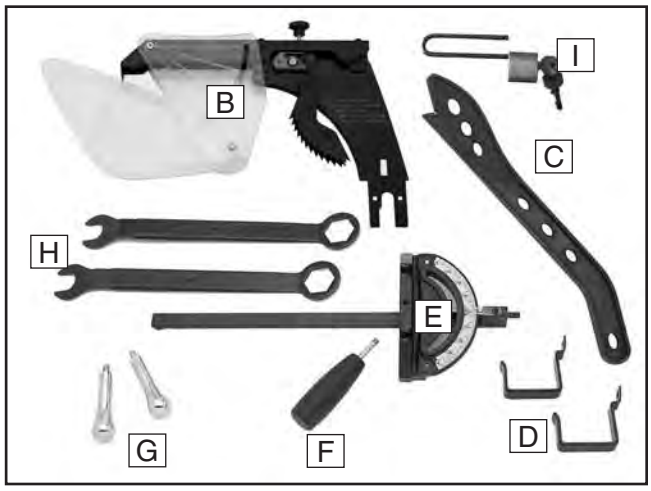

Figure 5. Main components.

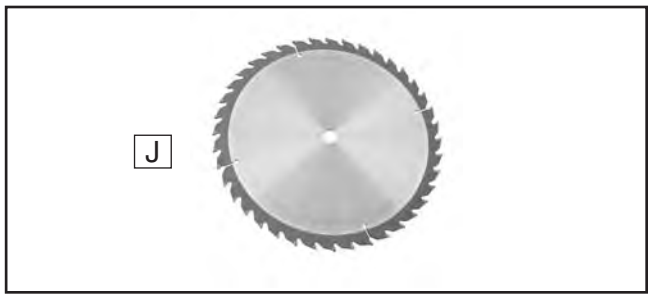

Figure 6. Saw blade.

Fasteners (and where used): Qty

- Flat Washer 8mm (Miter Gauge) 1
- Hex Bolts M8-1.25 x 12 (Fence Brackets) .. 2
- Flat Washers 8mm (Fence Brackets) 2
- Hex Bolts M8-1.25 x 12 (Switch) 2
- Flat Washers 8mm (Switch) 2
- Lock Washers 8mm (Switch) 2
- Lock Knob M5-.8 (Insert) 1
- Wire Nuts (Model G0652) 4

Tools (not shown) Qty

- Open-End Wrenches
  8 x 10, 11 x 13, 14 x 17 ..... 1 Each
- Hex Wrenches 3, 4, 5, 6mm ..... 1 Each
- Phillips/Flat Combo Screwdriver 1

Fence

Box Contents: (Figure 7) Qty

A. Fence 1
B. Fence Handle 1

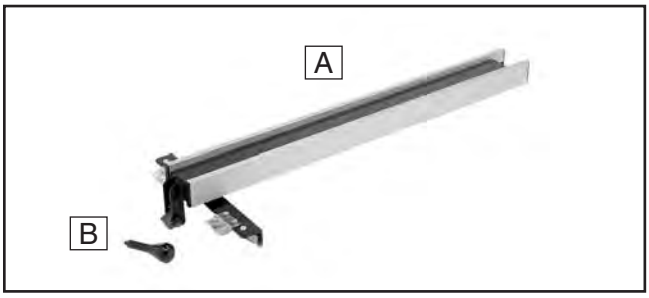

Figure 7. Fence components.

Fence Rail

Box Contents: (Figure 8) Qty

A. Fence Tube (91½" Long) 1
B. Front Rail (91½" Long) 1
C. Rear Rail (79" Long) 1

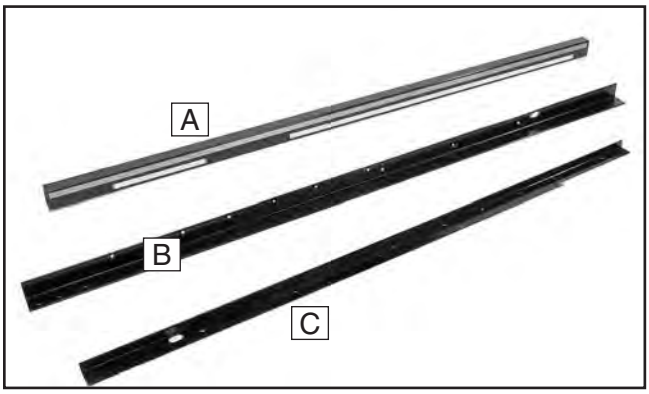

Figure 8. Fence rail components.

Extension Table

Box Contents: (Figure 9) **Qty**

A. Extension Table 1
B. Lower Shelf 1
C. Shelf End Plate 1
D. Support Legs 2
E. Lower Shelf Brackets 2

Fasteners (and where used): **Qty**

- Cap Screws M8-1.25 x 25 (Rear Rail/Cabinet/Ext. Table) 8
- Flat Head Screws M8-1.25 x 25 (Front Rail/Cabinet/Ext. Table) 8
- Flat Washers 8mm (Front Rail/Ext. Table/Rear Rail) 14
- Hex Nuts M8-1.25 (Front Rail/Ext. Table/Rear Rail) 8
- Lock Washers 8mm (Front Rail/Ext. Table/Rear Rail) 10
- Hex Bolts M8-1.25 x 12 (Cabinet/Ext. Table) 2
- Flat Washers 8mm (Cabinet/Ext. Table) 2
- Flat Head Screws M8-1.25 x 25 (Table/Ext. Table) 2
- Mounting Plates (Table/Ext. Table) 2
- Hex Bolts M6-1 x 12 (Brackets/Cabinet/Legs) 2
- Hex Nuts M6-1 (Brackets/Cabinet) 2
- Feet ⅜"-16 x 2 (Legs) 2
- Hex Nuts ⅜-16 (Legs) 2
- Phillip Head Screws M6-1 x 12 (Ext. Table/Legs/Shelf Brackets) 14
- Flat Washers 6mm (Ext Table/Legs/Shelf Brackets) 16
- Hex Bolts w/Washers M8-1.25 x 12 (Tube/ Front Rail) 9

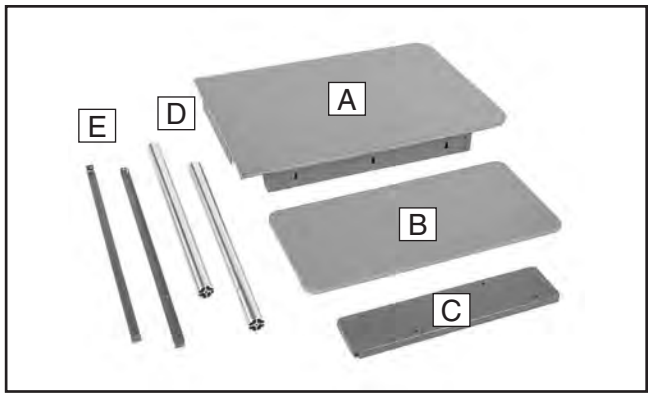

Figure 9. Extension table components.

Outfeed Table

Box Contents: (Figure 10) **Qty**

A. Outfeed Table 1
B. Lower Shelf 1
C. Shelf End Plate 1
D. Support Legs 2
E. Lower Shelf Brackets 2

Fasteners (and where used): **Qty**

- Hex Bolts M8-1.25 x 20 w/Washer (Rear Rail/Outfeed Table) 2
- Hex Nuts M8-1.25 (Rear Rail/Outfeed Table) 2
- Flat Washers 8mm (Rear Rail/Outfeed Table) 2
- Hex Bolts M6-1 x 12 (Brackets/Cabinet) 2
- Hex Nuts M6-1 (Bracket/End Plate) 2
- Flat Washers 6mm (Outfeed Table/Legs/Shelf Brackets) 16
- Phillips Head Screws M6-1 x 12 (Outfeed Table/Legs/Shelf Brackets) 14
- Feet ⅜-16 x 2 (Legs) 2
- Hex Nuts ⅜-16 (Legs) 2

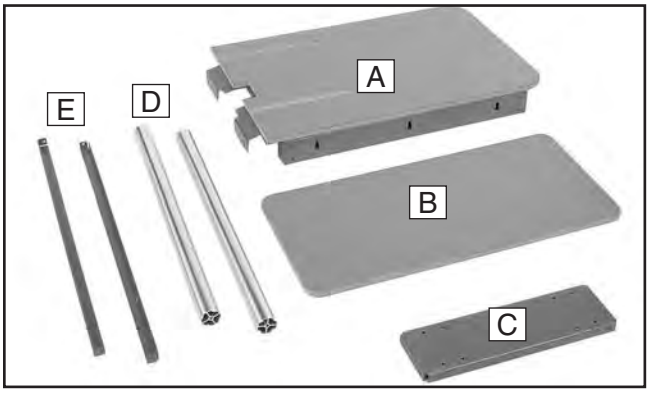

Figure 10. Outfeed table components.

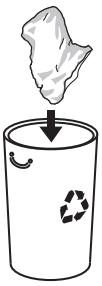

⚠WARNING

SUFFOCATION HAZARD!
Immediately discard all plastic bags and packing materials to eliminate choking/suffocation hazards for children and animals.

If any nonproprietary parts are missing (e.g. a nut or a washer), we will gladly replace them; or for the sake of expediency, replacements can be obtained at your local hardware store.

Hardware Recognition Chart

USE THIS CHART TO MATCH UP HARDWARE DURING THE ASSEMBLY PROCESS.

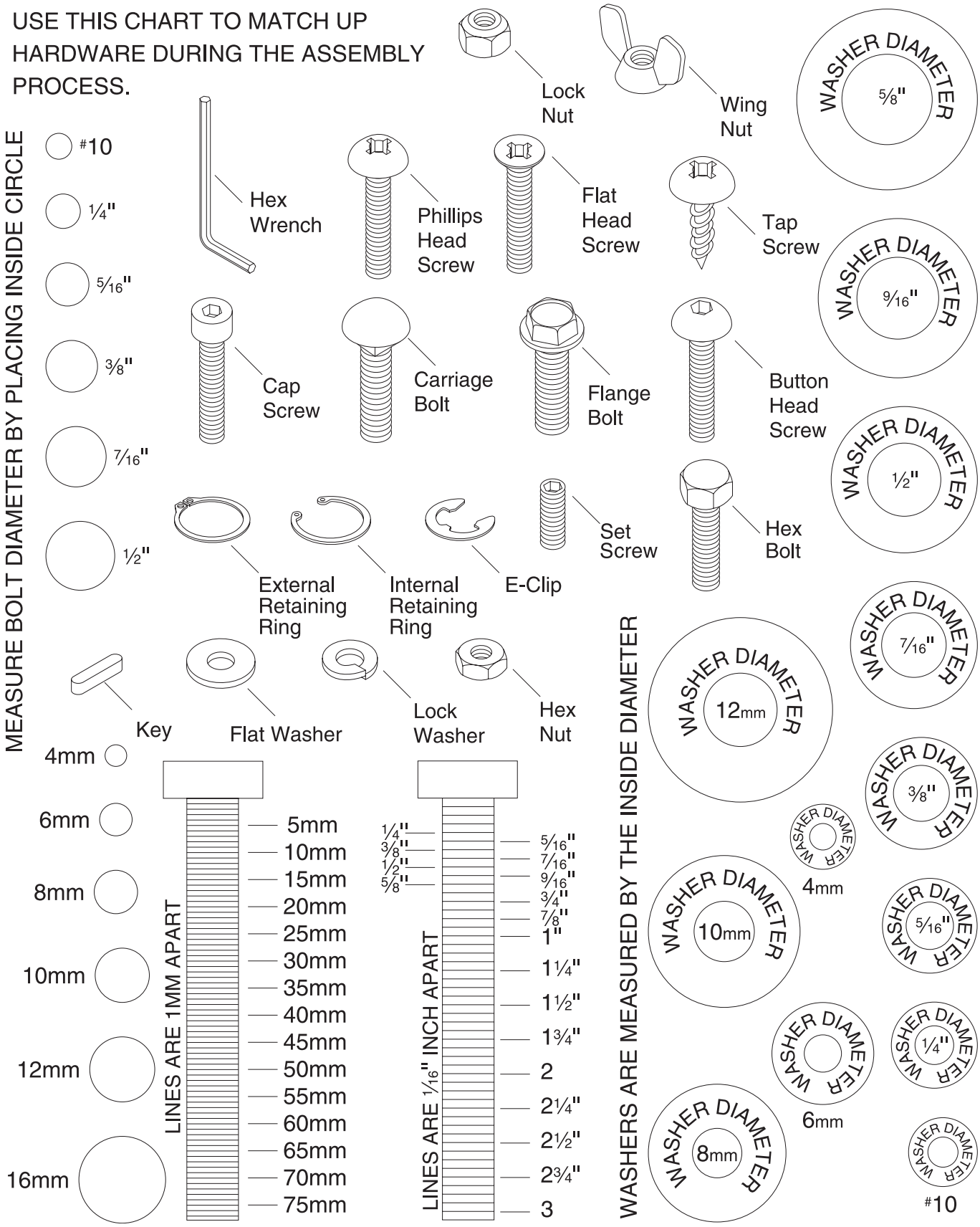

Cleanup

The unpainted surfaces of your machine are coated with a heavy-duty rust preventative that prevents corrosion during shipment and storage.

This rust preventative has been your machine's close ally and guardian since it left the factory. If your machine arrived to you free of rust, then be thankful that the rust preventative protected it during its journey...and try to stay thankful as you clean it off, because it can be challenging to remove if you are unprepared and impatient.

Plan on spending some time cleaning your machine. The time you spend doing this will reward you with smooth sliding parts and a better appreciation for the proper care of your machine's unpainted surfaces.

Although there are many ways to successfully remove the rust preventative, these instructions walk you through what works well for us.

Before cleaning, gather the following:
- Disposable Rags
- Cleaner/degreaser (see below)
- Safety glasses & disposable gloves

H9692—Orange Power Cleaner & Degreaser
One of the best cleaners we've found for quickly and easily removing rust preventative.

Figure 11. Model H9692 Orange Power Cleaner/ Degreaser (99.9% biodegradable).

Note: *In a pinch, automotive degreasers, mineral spirits or WD•40 can be used to remove rust preventative. Before using these products, though, test them on an inconspicuous area of your paint to make sure they will not damage it.*

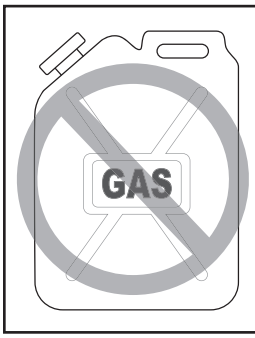

WARNING

Gasoline and petroleum products have low flash points and can explode or cause fire if used to clean machinery. Avoid using these products to clean machinery.

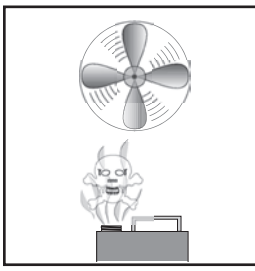

CAUTION

Many cleaning solvents are toxic if inhaled. Minimize your risk by only using these products in a well ventilated area.

NOTICE

Avoid chlorine-based solvents, such as acetone or brake parts cleaner that may damage painted surfaces. Always follow the manufacturer's instructions when using any type of cleaning product.

Basic steps for removing rust preventative:

1. Put on safety glasses and disposable gloves.

2. Coat all surfaces that have rust preventative with a liberal amount of your cleaner/degreaser and let them soak for few minutes.

3. Wipe off the surfaces. If your cleaner/degreaser is effective, the rust preventative will wipe off easily.

   Note: *To clean off thick coats of rust preventative on flat surfaces, such as tables, use a PLASTIC paint scraper to scrape off the majority of the coating before wiping it off with your rag. (Do not use a metal scraper or you may scratch your machine.)*

4. Repeat **Steps 2–3** as necessary until clean, then coat all unpainted surfaces with a quality metal protectant to prevent rust.

Site Considerations

Weight Load

Refer to the **Machine Data Sheet** for the weight of your machine. Make sure that the surface upon which the machine is placed will bear the weight of the machine, additional equipment that may be installed on the machine, and the heaviest workpiece that will be used. Additionally, consider the weight of the operator and any dynamic loading that may occur when operating the machine.

Space Allocation

Consider the largest size of workpiece that will be processed through this machine and provide enough space around the machine for adequate operator material handling or the installation of auxiliary equipment. With permanent installations, leave enough space around the machine to open or remove doors/covers as required by the maintenance and service described in this manual. **See below for required space allocation.**

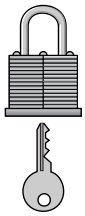

CAUTION

Children or untrained people may be seriously injured by this machine. Only install in an access restricted location.

Physical Environment

The physical environment where your machine is operated is important for safe operation and the longevity of its components. For best results, operate this machine in a dry environment that is free from excessive moisture, hazardous chemicals, airborne abrasives, or extreme conditions. Extreme conditions for this type of machinery are generally those where the ambient temperature range exceeds 41°–104°F; the relative humidity range exceeds 20–95% (non-condensing); or the environment is subject to vibration, shocks, or bumps.

Electrical Installation

Place this machine near an existing power source. Make sure all power cords are protected from traffic, material handling, moisture, chemicals, or other hazards. Make sure to leave access to a means of disconnecting the power source or engaging a lockout/tagout device.

Lighting

Lighting around the machine must be adequate enough that operations can be performed safely. Shadows, glare, or strobe effects that may distract or impede the operator must be eliminated.

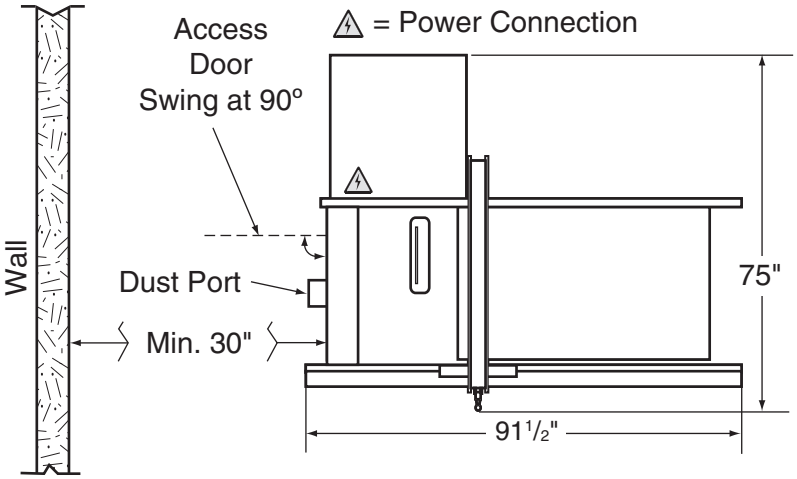

Figure 12. Minimum working clearances.

Assembly

To assemble the extension table and outfeed tables:

1. Fasten the 91½" front rail onto the table saw with four M8-1.25 x 25 flat head screws, as shown in **Figure 13**. Also, secure the far left side of the rail with one M8-1.25 x 25 flat head screw, 8mm lock washer, and an M8-1.25 hex nut.

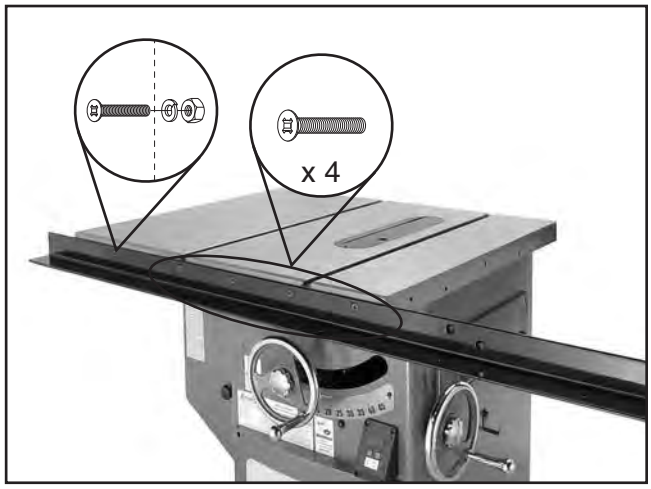

Figure 13. Front rail installed.

2. Fasten the 79" rear rail to the table with four M8-1.25 x 25 cap screws, 8mm lock washers, and 8mm flat washers, as shown in **Figure 14**. Secure the left side of the rail to the table with one M8-1.25 x 25 cap screw, two 8mm flat washers, two 8mm lock washers, and one M8-1.25 hex nut.

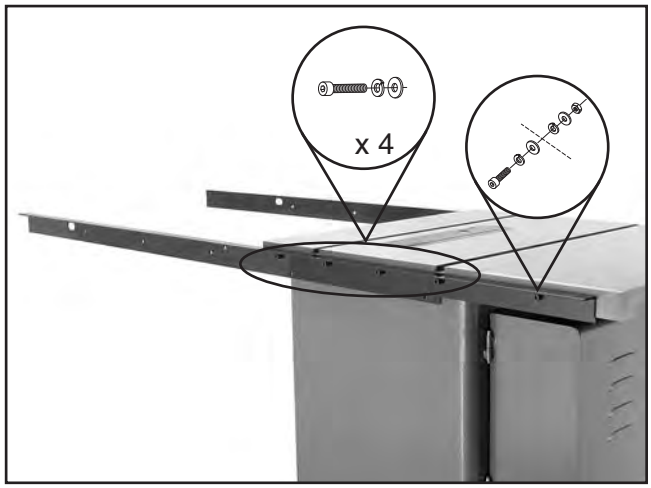

Figure 14. Rear rail installed.

3. Secure the metal plates to the table with M8-1.25 x 25 flat head screws on the right side of the table saw cabinet, as shown in **Figure 15**, then thread two M8-1.25 x 12 hex bolts with 8mm flat washers into the metal plates. Do not fully tighten the bolts.

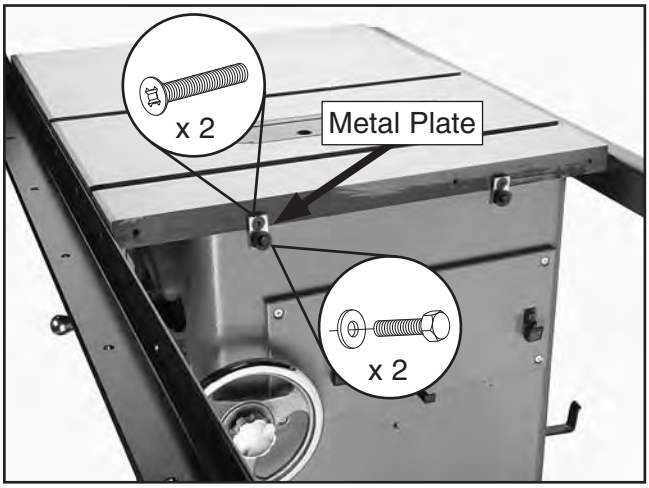

Figure 15. Metal plates installed.

4. With the help of an assistant, place the extension table between the rails and slide the table slots over the hex bolts installed in **Step 3**.

5. While an assistant holds the extension table, fasten the 91½" front rail to the extension table with (3) M8-1.25 x 25 flat head screws, 8mm flat washers, 8mm lock washers, and M8-1.25 hex nuts (see **Figure 16**). Finger-tighten for now.

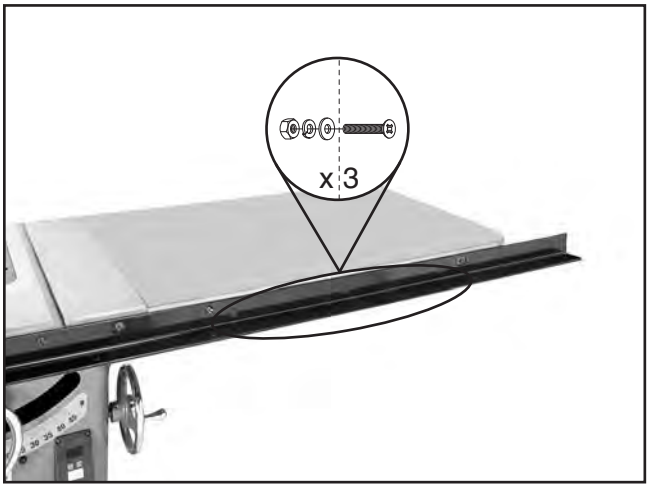

Figure 16. Front rail/table fastener locations.

6. Fasten the 79" rear rail to the extension table with three M8-1.25 x 25 cap screws, three 8mm lock washers, six 8mm flat washers, and three M8-1.25 hex nuts, as shown in **Figure 17**. Finger tighten for now.

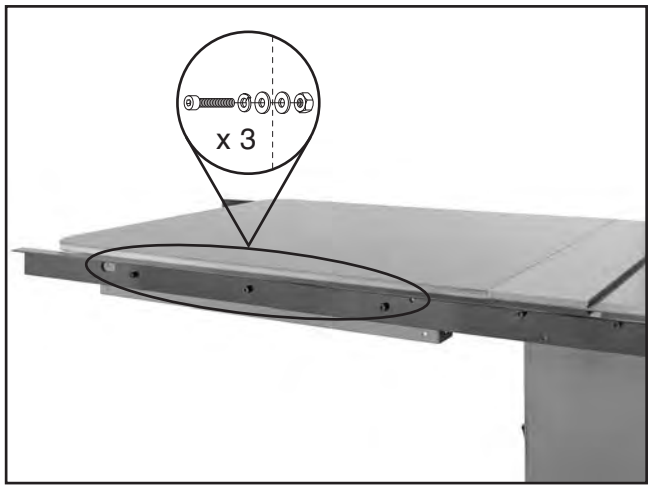

Figure 17. Rear rail/table fastener locations.

7. Align the table and extension table with a straightedge, as shown in **Figure 18**, then tighten all of the mounting fasteners.

Figure 18. Aligning main extension table.

8. Install each foot with a ⅜-16 hex nut onto into the bottom of a support leg, as shown in **Figure 19**.

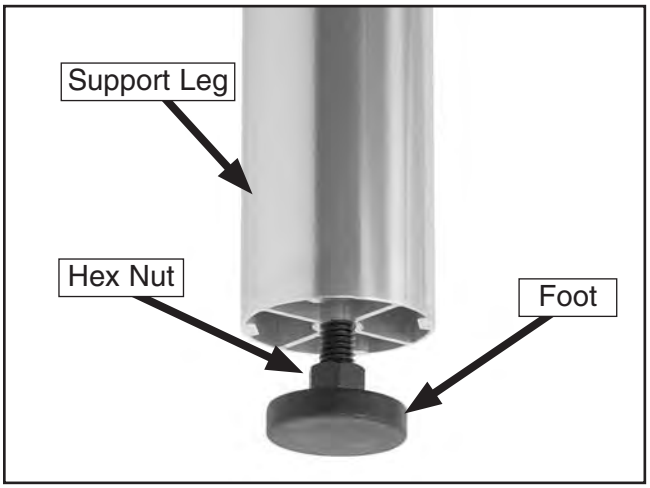

Figure 19. Foot installed on support leg.

9. Fasten each support leg to the main extension table with four M6-1 x 12 Phillips head screws and 6mm flat washers, as shown in **Figure 20**.

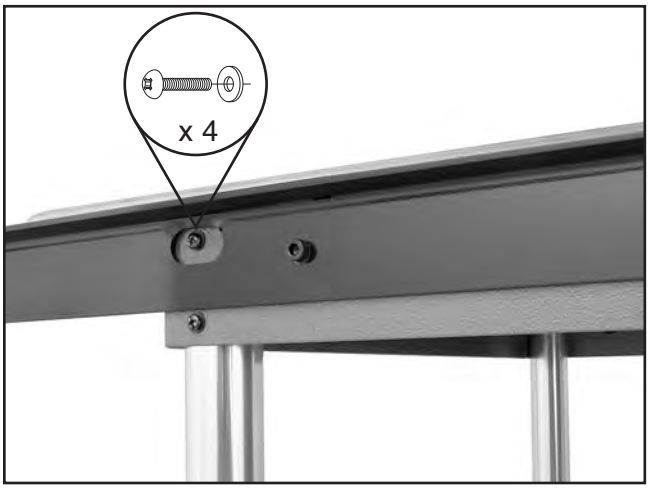

Figure 20. Support leg fastened to main extension table.

10. Rotate both feet until they touch the ground, and tighten the hex nuts against the support legs to secure the feet.

11. Fasten the shelf end plate to the legs with four M6-1 x 12 Phillips head screws and 6mm flat washers, as shown in **Figure 21**.

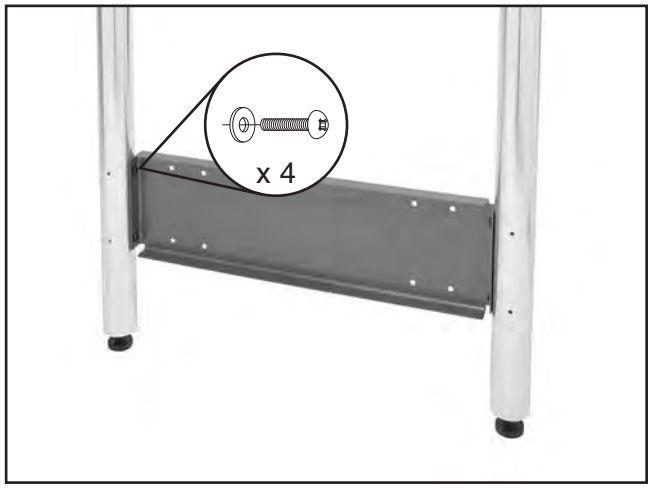

Figure 21. Installing shelf end plate on extension table legs.

12. Place the shelf brackets between the cabinet and support legs, and fasten with two M6-1 x 12 Phillip head screws, two M6-1 x 12 hex bolts, four 6mm flat washers and two M6-1 hex nuts, as shown in **Figure 22**.

    Note: *The flange on the shelf bracket must point up to ensure proper installation.*

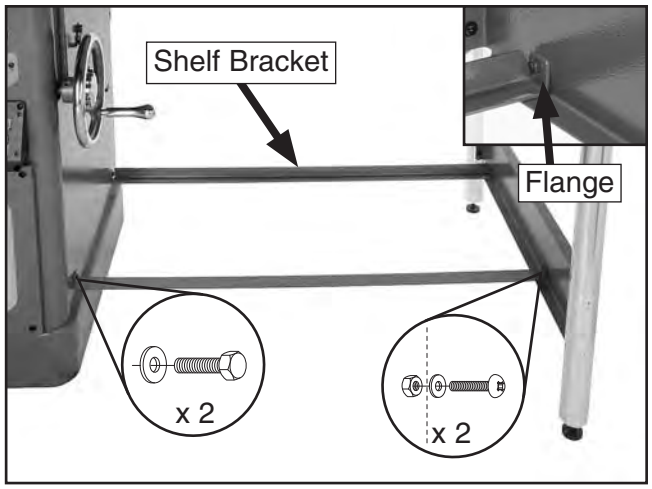

Figure 22. Shelf brackets installed.

13. Place the lower shelf on the brackets.

14. Turn the outfeed table upside down and place it on a level surface.

15. Repeat **Steps 8-11** to install the feet, support legs, and shelf end plate on the outfeed table.

16. Place the outfeed extension table assembly upright with the feet on the ground, align the slots in the extension table bracket with the rear rail mounting holes, then fasten the table to the rail with two M8-1.25 x 20 hex bolts, 8mm flat washers, and M8-1.25 hex nuts, as shown in **Figure 23**.

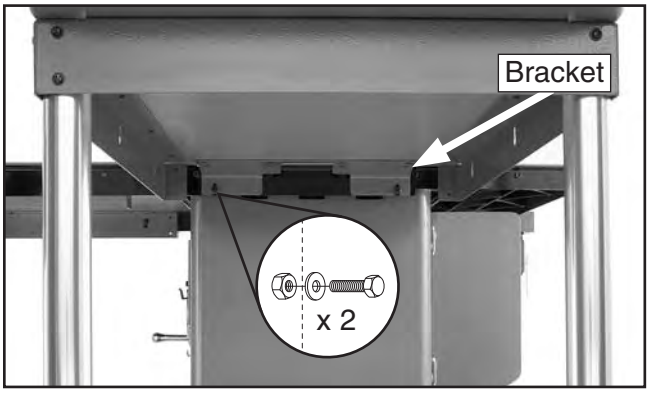

Figure 23. Outfeed table fastened to rear rail.

17. Secure the lower shelf brackets to the support legs and cabinet, using the same fasteners as in **Step 12.**

18. Install the lower shelf on the brackets.

19. Place the 91½" fence tube over the 91½" front rail and secure with nine M8-1.25 x 12 hex bolts with 8mm flat washers, as shown in **Figure 24**.

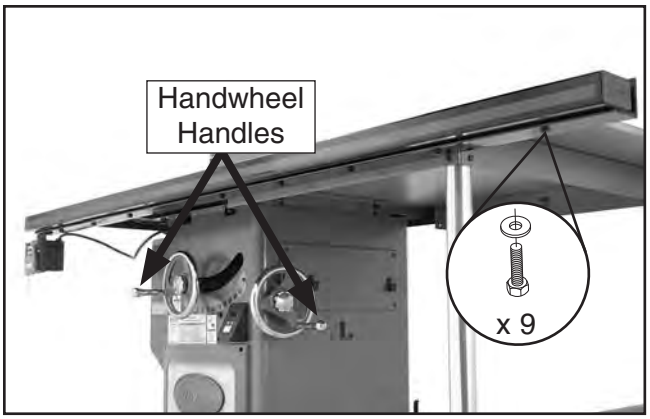

Figure 24. Fence tube mounted to front fence rail.

20. Install the handwheel handles, as shown in **Figure 24.**

21. Fasten the ON/OFF switch to the left end of the front rail with two M8-1.25 x 12 hex bolts, 8mm flat washers and 8mm lock washers, then insert the switch disabling lock, as shown in **Figure 25**.

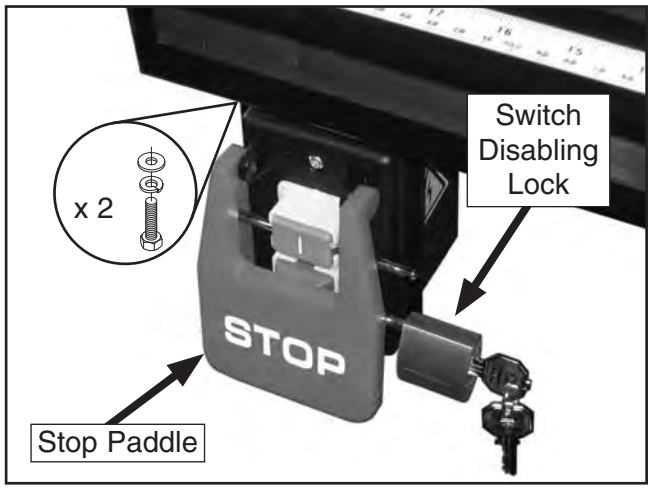

Figure 25. Switch installed.

22. Turn the lock knob that secures the table insert so it is parallel to the inner slot, as shown in **Figure 26**, then remove the insert and set it aside.

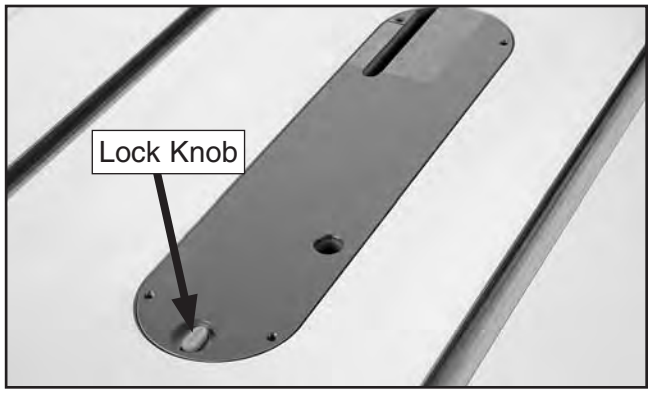

Figure 26. Insert lock knob unlocked.

23. Raise the arbor all the way up and set the arbor angle to 0°.

24. Unthread the lock knob on the riving knife/blade guard mounting block (**Figure 27**) several turns. Push the riving knife away from the knob, then lift the riving knife up to remove it.

Note: *The riving knife is installed for shipping purposes. Two pins in the mounting block insert into matching slots on the riving knife, keeping it secured.*

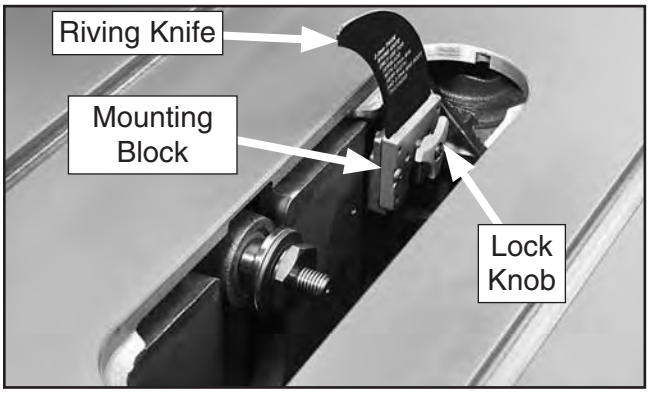

Figure 27. Riving knife installed.

25. Remove the arbor nut and arbor flange from the arbor, slide on the included 10" saw blade, making sure the teeth face the front of the saw, then install the arbor flange and arbor nut onto the blade.

26. Put on a pair of heavy leather gloves and use the included arbor wrenches to tighten the arbor nut (turn clockwise to tighten), as shown in **Figure 28**, then lower the blade all the way down.

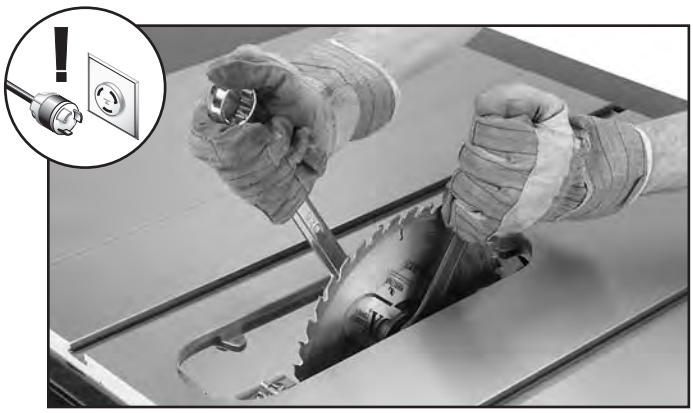

Figure 28. Example of securing blade.

27. Install the fence knob onto the fence, as shown in **Figure 29**.

Figure 29. Fence knob installed.

28. Mount the fence on the front rail to the right of the blade.

29. Install the fence resting brackets (**Figure 30**) onto the back of the cabinet with the two M8-1.25 x 12 hex bolts and 8mm flat washers.

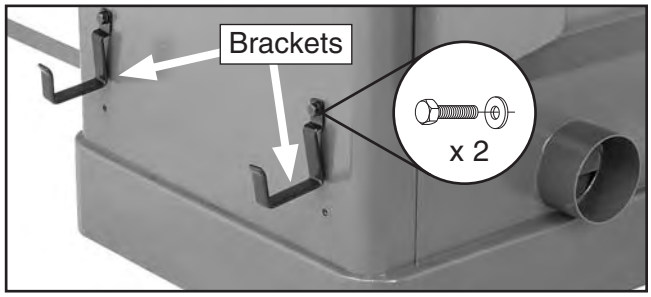

Figure 30. Fence resting brackets installed.

30. Install the miter gauge handle and 8mm flat washer onto the miter gauge, as shown in **Figure 31**.

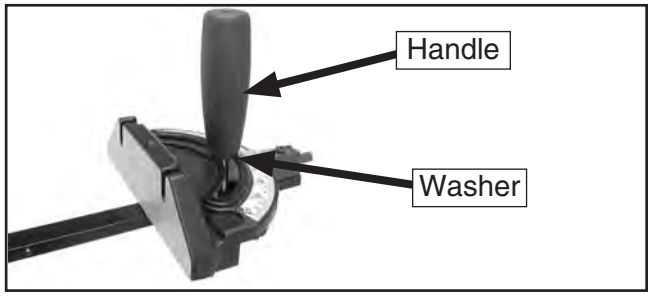

Figure 31. Miter gauge installed.

31. Slide the miter gauge into the T-slot on the left side of the blade; or store it on the brackets near the blade angle handwheel.

32. Follow instructions in **Dust Collection**, **Power Connection**, and **Test Run**, then proceed to **Final Setup** to complete the remaining assembly steps.

Dust Collection

⚠CAUTION

DO NOT operate the Model G0651/G0652 without an adequate dust collection system. This saw creates substantial amounts of wood dust while operating. Failure to use a dust collection system can result in short and long-term respiratory injury.

Components and Hardware Needed:	**Qty**
4" Dust Hose (not included)	1
4" Hose Clamp (not included)	2
Dust Collection System (not included)	1

Recommended CFM at Dust Port: 400 CFM
Do not confuse this CFM recommendation with the rating of the dust collector. To determine the CFM at the dust port, you must consider these variables: (1) CFM rating of the dust collector, (2) hose type and length between the dust collector and the machine, (3) number of branches or wyes, and (4) amount of other open lines throughout the system. Explaining how to calculate these variables is beyond the scope of this manual. Consult an expert or purchase a good dust collection "how-to" book.

To connect a dust collection hose:

1. Fit the 4" dust hose over the dust port, as shown in **Figure 32**, and secure in place with a hose clamp.

2. Tug the hose to make sure it does not come off. **Note:** *A tight fit is necessary for proper performance.*

Figure 32. Dust hose attached to dust port.

Power Connection

Before the machine can be connected to the power source, an electrical circuit must be made available that meets the minimum specifications given in "Circuit Requirements for 220V" on **Page 15**. If a power circuit has not been prepared for the machine, do that now. To ensure a safe and code-compliant setup, we strongly recommend that all electrical work be done by a qualified electrician.

G0651 Power Connection

Insert the pre-installed 6-15 plug into a matching 220V, NEMA 6-15 receptacle, similar to the one shown in **Figure 2** on **Page 16**.

G0652 Power Connection

Hardwire setups require power supply lines to be enclosed inside conduit, which is securely mounted and constructed in adherance to applicable electrical codes.

A hardwire setup for this machine must be equipped with a locking disconnect switch as a means to disconnect the power during adjustments or maintenance, which is a typical requirement for lock-out/tag-out safety programs (commonly required by OSHA).

Figure 3 on **Page 17** shows a simple diagram of a hardwire setup with a locking disconnect switch between the power source and the machine.

Due to the complexity required for planning, bending, and installing the conduit necessary for a hardwire setup, this type of setup can only be performed by an experienced electrician.

To connect the Model G0652 to 220V/440V power:

1. Remove the junction box cover on the rear of the cabinet.

2. Loosen the strain relief on the bottom of the junction box shown in **Figure 33**, then insert the incoming power wires into the junction box.

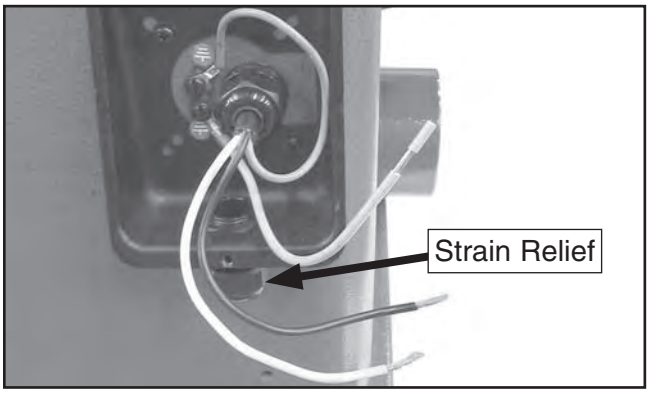

Figure 33. Power connection junction box.

3. Connect the incoming power wires and ground wire to the wires in the junction box using wire nuts, (see **Figure 34**), then wrap each of the wire nuts and their respective wires with electrical tape to secure them.

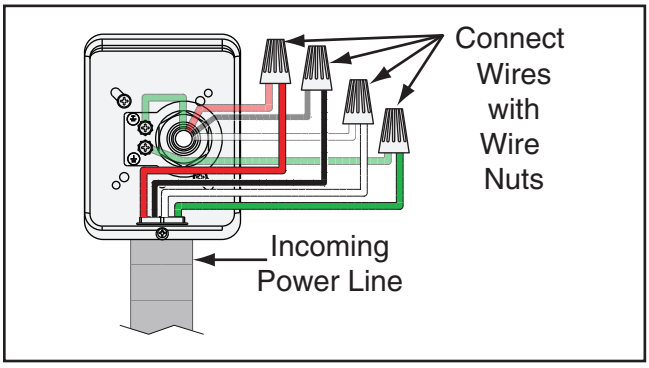

Figure 34. Model G0652 incoming power wires connected at junction box.

4. Tighten the strain relief on the bottom of the junction box against the conduit—not directly against the wires—then re-install the cover. Leave a little slack in the wires inside the junction box.

Phase Converter Precaution

The power from the manufactured leg may damage electrical components if connected to the wrong incoming power terminal on your machine. Refer to the phase converter notice on the wiring diagram on **Page 86** for more detail.

Test Run

Test run your machine to make sure it runs properly and is ready for regular operation.

The test run consists of verifying the following: 1) The motor powers up and runs correctly, 2) the safety disabling mechanism on the switch works correctly, and 3) the blade turns the correct direction (the machine is not wired out of phase—G0652 only).

If, during the test run, you cannot easily locate the source of an unusual noise or vibration, stop using the machine immediately, then review the **Troubleshooting** on **Page 67**.

If you still cannot remedy a problem, contact our Tech Support at (570) 546-9663 for assistance.

To test run the machine:

1. Make sure you have read the safety instructions at the beginning of the manual and that the machine is set up properly.

2. Make sure all tools and objects used during setup are cleared away from the machine.

3. Lower the blade all the way down.

4. Check to make sure the machine is connected to the power source. If it is not connected, do so now. Refer to **Power Connection** on **Page 30** for instructions.

5. Remove the switch disabling lock.

6. Verify that the machine is operating correctly by pressing the ON button.

   —When operating correctly, the machine runs smoothly with little or no vibration or rubbing noises.

   —Investigate and correct strange or unusual noises or vibrations before operating the machine further. Always disconnect the machine from power when investigating or correcting potential problems.

7. Turn the machine ***OFF***.

8. Insert the switch disabling lock through the green ON button, as shown in **Figure 35**.

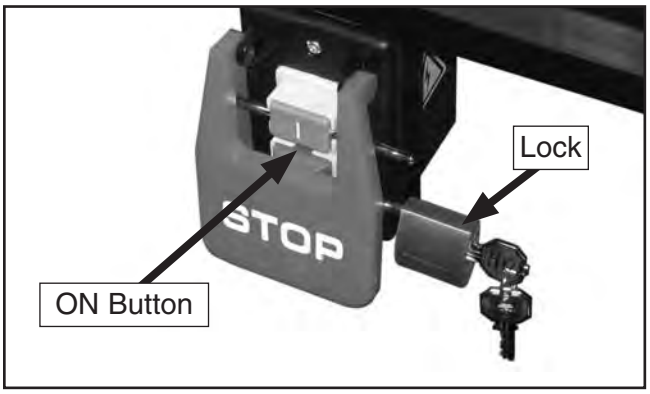

Figure 35. Switch disabling lock inserted into ON button.

9. Press the green ON button to test the disabling feature on the switch.

   —If the machine does not start, the switch disabling feature is working as designed. Continue to the next step.

   —If the machine starts, immediately stop the machine. The switch disabling feature is not working correctly. This safety feature must work properly before proceeding with regular operations. Call Tech Support for help.

10. **Model G0652 Only:** Verify that the power is not connected out of phase by starting/stopping the table saw and determining if the motor turns in the correct direction using the criteria below:

    —If the blade turns clockwise (standing at the left front side of the table saw), it is turning in the correct direction. Go to **Step 11**.

    —If the blade turns counterclockwise and toward the back of the saw (standing at the left front side of the table saw), it is turning in the wrong direction.

    Stop the table saw, disconnect the power source, and refer to **Correcting Phase Polarity** on **Page 18** for detailed instructions on reversing the phase polarity.

11. The saw is now ready to operate.

Final Setup

The remaining tasks required for assembling the saw include the following steps: installing the table insert and cutting a slot for the blade, checking fence parallelism, installing the blade guard, and calibrating the blade angle digital readout.

To complete the remaining assembly steps:

1. DISCONNECT SAW FROM POWER!

2. Install and cut the table insert, as instructed in **Cutting a Zero Clearance Insert**, on **Page 42**, then proceed to the next step.

3. Verify that the fence is parallel to the blade/miter slot and that this setting did not change during shipping (refer to "Clamping Pressure and Parallelism" on **Page 76**). The blade was set parallel with the miter slot at the factory—this affects whether the fence is parallel when mounted to the table.

4. Install the blade guard as instructed in "Installing Blade Guard & Spreader" on **Page 38**.

5. Calibrate the digital readout before operating the saw (refer to **Page 79** for instructions.) Each time power is disconnected the digital readout will also need to be recalibrated.

Recommended Adjustments

For your convenience, the adjustments listed below have been performed at the factory and no further setup is required to operate this machine. However, because of the many variables involved with shipping, we recommend that you verify the following adjustments to ensure that your new saw cuts safely and accurately.

Step-by-step instructions for these adjustments can be found in **SECTION 7: SERVICE**.

Adjustments that should be verified:

1. Blade Tilt Stop Accuracy (**Page 69**).

2. Miter Slot Parallel to Blade (**Page 71**).

SECTION 4: OPERATIONS

⚠WARNING

Damage to your eyes, lungs, and ears could result from using this machine without proper protective gear. Always wear safety glasses, a respirator, and hearing protection when operating this machine.

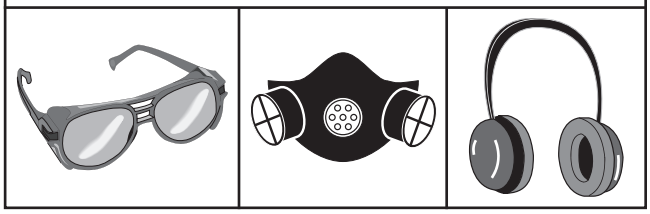

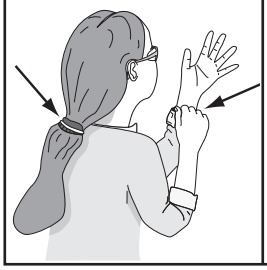

⚠WARNING

Loose hair, clothing, or jewelry could get caught in machinery and cause serious personal injury. Keep these items away from moving parts at all times to reduce this risk.

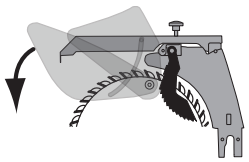

⚠WARNING

Keep the blade guard in the down position at all times. Failure to do this could result in serious personal injury or death.

NOTICE

If you have never used this type of machine or equipment before, WE STRONGLY RECOMMEND that you read books, review industry trade magazines, or get formal training before beginning any projects. Regardless of the content in this section, Grizzly Industrial will not be held liable for accidents caused by lack of training.

Basic Controls

ON/OFF Switch: Starts and stops motor.

Switch Disabling Lock: This feature disables the switch to prevent accidental startup.

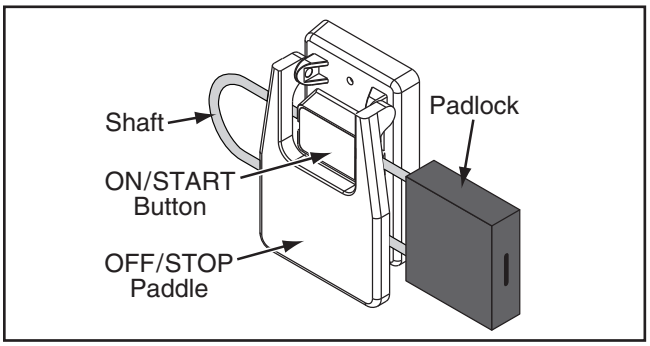

Figure 36. Switch disabled.

Blade Height Lock: Locks the blade height.

Blade Height Handwheel: Adjusts blade height.

Digital Readout: Displays blade tilt. **Note:** *The readout must be recalibrated (see **Page 79**) if the power is disconnected.*

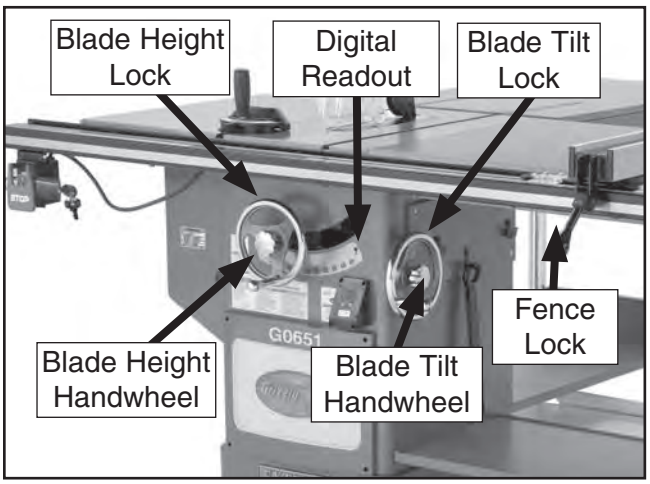

Figure 37. Basic table saw controls.

Blade Tilt Lock: Locks blade tilt angle.

Blade Tilt Handwheel: Adjusts the blade angle.

Fence Lock: Locks and unlocks fence position.

Operation Overview

The purpose of this overview is to provide the novice machine operator with a basic understanding of how the machine is used during a typical operation, so the controls/components discussed later in this manual are easier to understand.

Due to the generic nature of this overview, it is not intended to be an instructional guide. To learn more about specific operations, read this entire manual, read "how to" books, and seek additional training from experienced machine operators.

To complete a typical operation, the operator does the following:

1. Examines the workpiece to make sure it is suitable for cutting.
2. Adjusts the blade tilt, if necessary, to the correct angle of the desired cut.
3. Adjusts the blade height no more than ¼" higher than the thickness of the workpiece.
4. Adjusts the fence to the desired width of cut then locks it in place.
5. Checks the outfeed side of the machine for proper support and to make sure the workpiece can safely pass all the way through the blade without interference.
6. Puts on safety glasses and a respirator. Locates push sticks/blocks if needed.
7. Starts the saw.
8. Feeds the workpiece all the way through the blade while maintaining firm pressure on the workpiece against the table and fence, and keeping hands and fingers out of the blade path and away from the blade.
9. Stops the machine immediately after the cut is complete.

Disabling & Locking Switch

The ON/OFF switch can be disabled and locked with a padlock. While the padlock is inserted through the ON button, as shown in the **Figure** below, the motor cannot be started, which reduces the risk of accidental startup by children or unauthorized users.

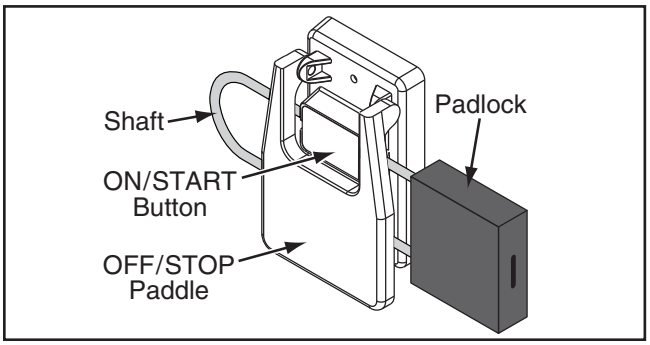

Figure 38. Switch disabled by a padlock.

⚠WARNING

Children or untrained people can be killed or seriously injured by this machine. If machine is accessible to children or other people, always disable and lock the switch before leaving machine unattended! Place key in a well-hidden or secure location.

NOTICE

The switch can only be disabled if the installed padlock shaft meets the minimum diameter shown below; otherwise the shaft may be too small to properly disable the switch.

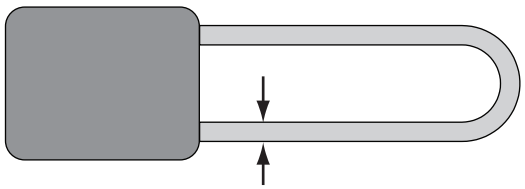

Minimum Shaft Diameter = 0.192" – 0.2" (4.8 – 5mm)

Figure 39. Minimum lock shaft requirements.

Non-Through & Through Cuts

Non-Through Cuts

A non-through cut is a sawing operation where the blade does not protrude above the top face of the wood stock, as shown in the **Figure** below.

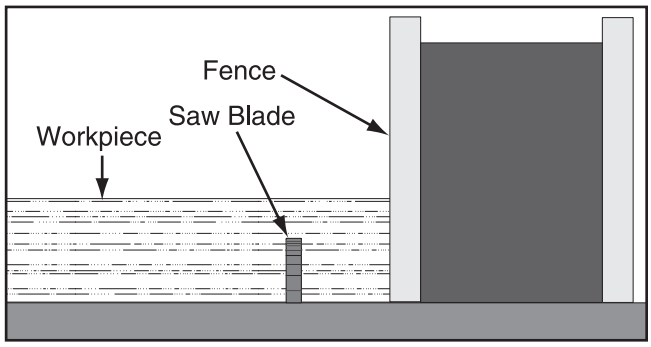

Figure 40. Example of a non-through cut.

Examples of non-through cuts include dadoes and rabbets. Non-through cuts have a higher risk of injury from kickback because the blade guard must be removed. However, the riving knife MUST be installed because it still provides some protection. When making non-through cuts with a dado blade, do not attempt to cut the full depth in one pass. Instead, take multiple light passes to reduce the load on the blade. A dado blade smaller than 10" will require removal of the riving knife, because the riving knife will be higher than the blade.

Through Cuts

A through cut is a sawing operation in which the workpiece is completely sawn through, as shown in the **Figure** below. Examples of through cuts are rip cuts, cross cuts, miter cuts, and beveled cuts. The blade guard assembly MUST be used when performing through cuts.

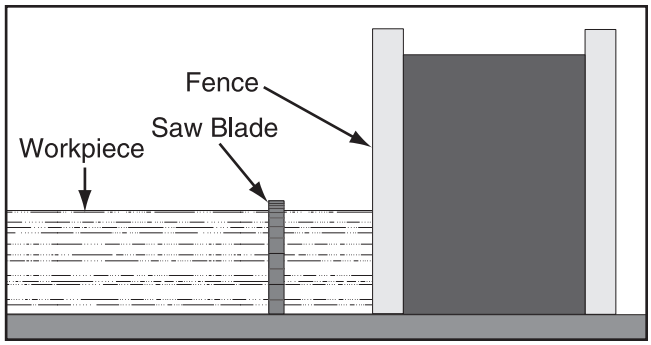

Figure 41. Example of a through cut (blade guard not shown for illustrative clarity).

Stock Inspection

Some workpieces are not safe to cut or may require modification before they are safe to cut. **Before cutting, inspect all workpieces for the following:**

- ***Material Type:*** This machine is intended for cutting natural and man-made wood products, laminate covered wood products, and some plastics. Cutting drywall or cementitious backer board creates extremely fine dust and may reduce the life of the motor bearings. This machine is NOT designed to cut metal, glass, stone, tile, etc.; cutting these materials with a table saw greatly increases the risk of injury and damage to the saw or blade.

- ***Foreign Objects:*** Nails, staples, dirt, rocks and other foreign objects are often embedded in wood. While cutting, these objects can become dislodged and hit the operator, cause kickback, or break the blade, which might then fly apart. Always visually inspect your workpiece for these items. If they can't be removed, DO NOT cut the workpiece.

- ***Large/Loose Knots:*** Loose knots can become dislodged during the cutting operation. Large knots can cause kickback and machine damage. Choose workpieces that do not have large/loose knots or plan ahead to avoid cutting through them.

- ***Wet or "Green" Stock:*** Cutting wood with a moisture content over 20% causes unnecessary wear on the blades, increases the risk of kickback, and yields poor results.

- ***Excessive Warping:*** Workpieces with excessive cupping, bowing, or twisting are dangerous to cut because they are unstable and may move unpredictably when being cut.

- ***Minor Warping:*** Slightly cupped workpieces can be safely supported with cupped side facing the table or fence; however, workpieces supported on the bowed side will rock during the cut, which could cause kickback.

Blade Requirements

The spreader/riving knife included with this machine is 0.09" (2.3mm) thick and is only designed for 10" diameter blades.

When choosing a main blade, make sure the blade size meets the requirements listed below. The thickness of the blade body and teeth can be measured with calipers or any precision measuring device.

Blade Size Requirements:
- Body Thickness: 0.074"–0.082" (1.9mm–2.1mm)
- Kerf (Tooth) Thickness: 0.114"–0.122" (2.9mm–3.1mm)

Blade Selection

This section on blade selection is by no means comprehensive. Always follow the saw blade manufacturer's recommendations to ensure safe and efficient operation of your table saw.

Ripping Blade Features:
- Best for cutting with the grain
- 20-40 teeth
- Flat-top ground tooth profile
- Large gullets for large chip removal

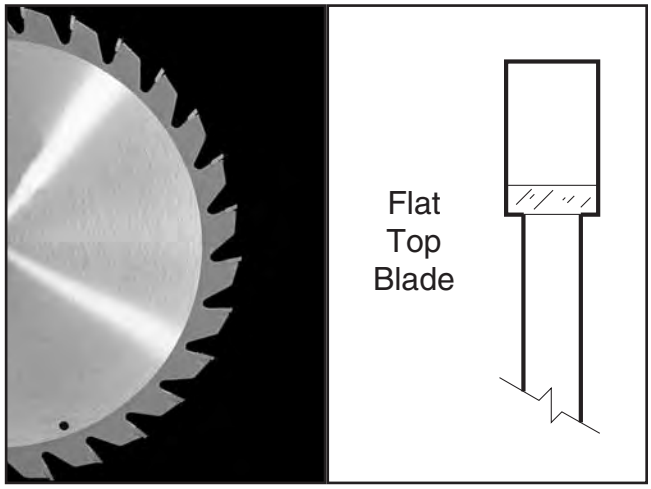

Figure 42. Ripping blade.

Crosscut blade features:
- Best for cutting across the grain
- 60-80 teeth
- Alternate top bevel tooth profile
- Small hook angle and a shallow gullet

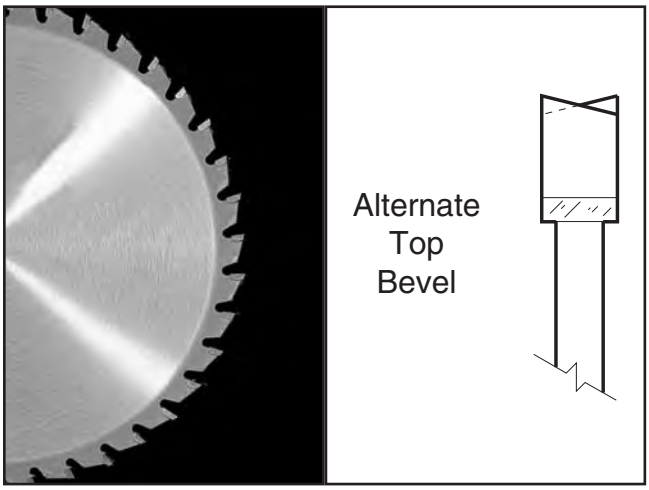

Figure 43. Crosscutting blade.

Combination blade features:
- Designed to cut both with and across grain
- 40-50 teeth
- Alternate top bevel and flat, or alternate top bevel and raker tooth profile
- Teeth are arranged in groups
- Gullets are small and shallow (similar to a cross-cut blade), then large and deep (similar to a ripping blade

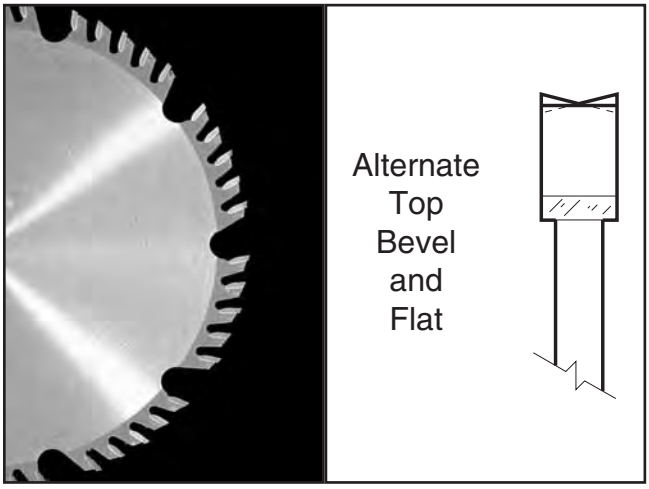

Figure 44. Combination blade.

Laminate blade features:
- Best for cutting plywood or veneer
- 40-80 teeth
- Triple chip tooth profile
- Very shallow gullet

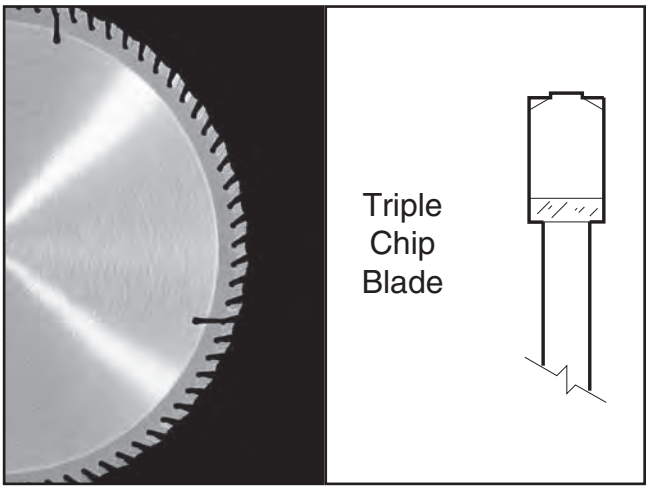

Figure 45. Laminate blade.

Thin Kerf Blade: A blade with thinner kerf than a standard blade. Since the spreader/riving knife included with this table saw is sized for standard blades, thin kerf blades cannot be used on this saw unless they meet the **Blade Requirements** specified in this manual; otherwise, they will increase the risk of kickback.

Dado Blades

Stacked Dado Blade (see below): Multiple blades are stacked together to control the cutting width. Stacked dado blades are more expensive than wobble blades, but typically produce higher quality results.

Wobble Dado Blade: A single blade mounted at a slight angle on an arbor hub. The blade angle is adjustable on the hub, and the width of the dado cut is controlled by the angle setting of the blade.

Figure 46. Stacked dado blade.

Blade Installation

To install a new blade:

1. DISCONNECT SAW FROM POWER!

2. Put on heavy leather gloves and raise the arbor all the way up.

3. Remove the table insert and blade guard/riving knife, depending on what is installed.

4. Use the arbor wrenches to loosen and remove the arbor nut, flange, and blade. **Note:** *The arbor nut has right hand threads; turn it counterclockwise to loosen.*

5. Slide the blade over the arbor with the teeth facing the front of the saw, as shown in **Figure 47**.

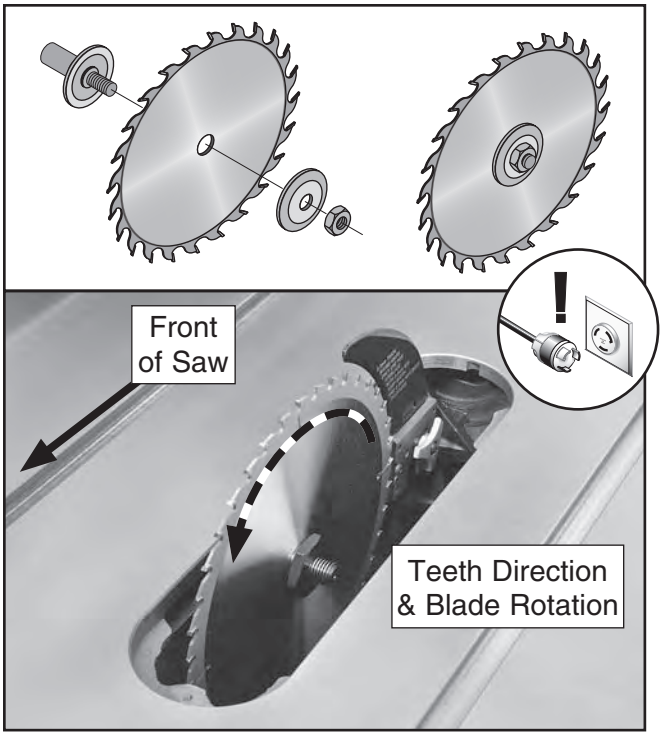

Figure 47. Example of correct blade direction.

6. Re-install the arbor flange and arbor nut, and tighten them against the blade. DO NOT overtighten.

7. Reinstall the blade guard/riving knife and table insert.

Blade Guard Assembly

The term "blade guard" refers to the assembly that consists of the clear polycarbonate shield, the spreader, and the anti-kickback pawls on each side of the spreader (**Figure 48**). Each of these components has important safety functions during the operation of the saw.

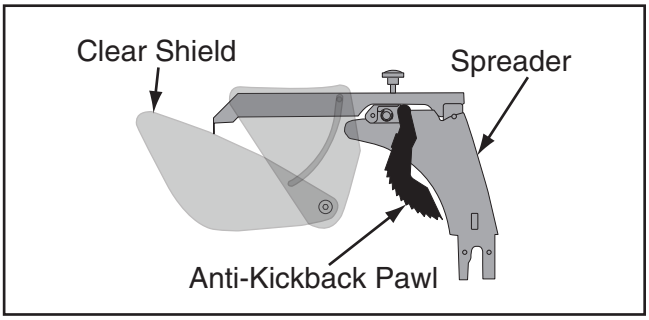

Figure 48. Blade guard assembly components.

Guard

The clear polycarbonate guard allows the operator to see the blade cut the workpiece during operation. This guard is designed to lift as the workpiece is pushed into the blade and remain in contact with the workpiece throughout the entire cut.

The guard reduces injury risk by providing a barrier around the blade that prevents accidental contact and contains flying wood chips.

To ensure that the guard does its job effectively, it must always be in the downward position against the table during idle operation, and the hinge mechanism must be maintained in good working condition so the guard can freely pivot up and down to accommodate the height of the workpiece and return to the table surface.

Spreader

The spreader is a metal plate that prevents the newly cut kerf of the workpiece from pinching the backside of the blade, causing kickback.

The spreader also acts as a barrier behind the blade to shield hands from being pulled into the blade if a kickback occurs.

⚠WARNING

In order to work properly, the spreader cannot be bent or misaligned with the blade. If the spreader gets accidentally bent, take the time to straighten it or just replace it. Using a bent or misaligned spreader will increase the risk of kickback!

⚠CAUTION

To ensure that the blade spreader works safely, the specifications listed in Blade Requirements on Page 36 MUST be met when installing new blades.

The spreader MUST be aligned/adjusted to the blade. *These requirements do not apply to dado blades.*

Installing Blade Guard & Spreader

1. DISCONNECT SAW FROM POWER!

2. Remove the table insert.

3. Insert the spreader into the bracket slot and tighten the lock knob shown in **Figure 49** to secure the spreader.

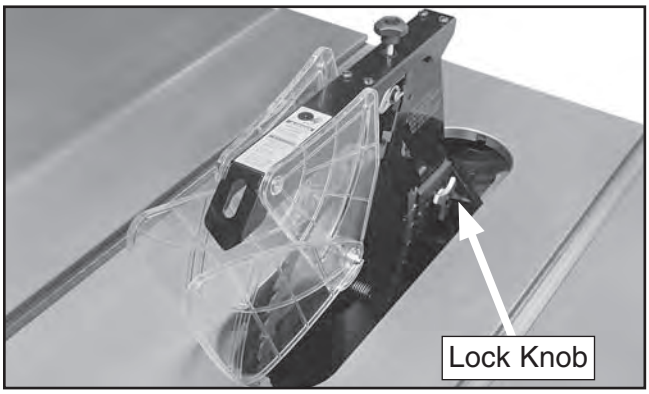

Figure 49. Location to secure blade guard.

4. Tug the spreader up to verify it is locked.

5. Lift the blade guard cover just enough to slide the table insert into the table slot over the blade, then secure the insert with the knob on the front of the insert.

   The blade guard, when properly installed, should look like **Figure 50** and should pivot freely so it touches the table surface in the down position. It should also swing up high enough to accommodate the workpiece.

Figure 50. Blade guard and insert installed.

6. Swing one side of the blade guard up and out of the way.

7. While lifting up on the right spreader pawl, place a straightedge against the blade and the spreader.

   When properly aligned, the spreader/riving knife will be in the "Alignment Zone," shown in **Figure 51**, and will be parallel with the blade.

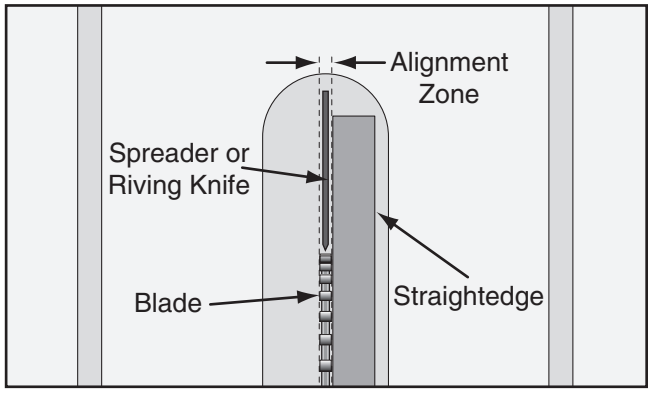

Figure 51. Spreader/riving knife alignment zone.

—If the spreader/riving knife is not inside the alignment zone and not parallel with the blade, then it needs to be adjusted. Proceed to "Adjusting Alignment" on **Page 73**.

—If the spreader/riving knife is not parallel with the blade, it may be bent. Proceed to "Checking Alignment" on **Page 73** to determine if the spreader/riving knife is bent.

Anti-Kickback Pawls

The anti-kickback pawls allow the workpiece to travel in only one direction. If the workpiece moves backwards, such as during a kickback, the pawls will dig into the workpiece to slow or stop it.

To work properly, the pawls must return to their bottom-most position after pivoting, as shown in **Figure 52**.

Note: *The right pawl is designed to tilt slightly away from the blade guard assembly to prevent the pawl from catching in the table insert.*

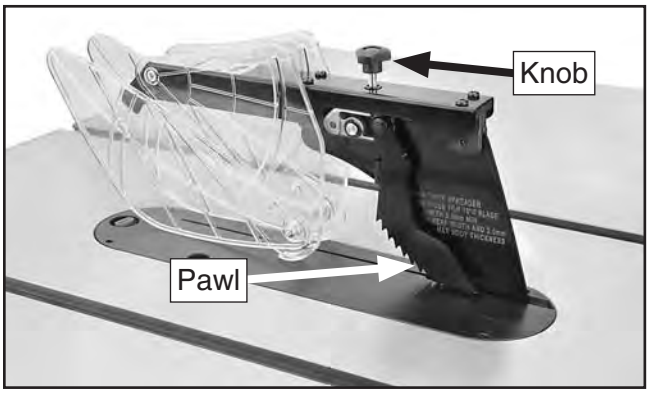

Figure 52. Pawls in return position.

If the pawls fail to return to the bottom position, the pivot spring may have been dislodged or broken and will need to be fixed/replaced.

Removing Pawls

You might remove the pawls if you are concerned about them scratching a delicate workpiece, or if you believe that they will obstruct a narrow workpiece and cause feeding difficulty or loss of control. Use your best judgment before removing the pawls, as they are provided for your safety.

⚠WARNING

We do not recommend removing the pawls during normal operations unless absolutely necessary. In most situations, removing the pawls will increase your risk of serious personal injury in the event of a kickback.

To remove the pawls:

1. Loosen the knob on top of the spreader several turns, then remove the blade guard assembly.

2. Press the button (see **Figure 53**) on the block that holds the pawls, then remove the pawls from the spreader.

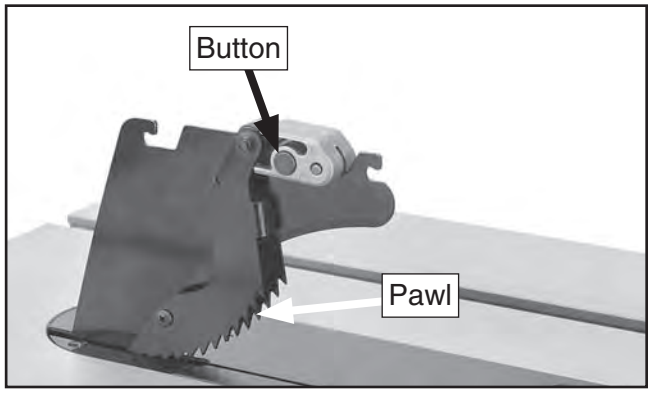

Figure 53. Button for removing pawls.

3. Re-install the blade guard onto the spreader, making sure the front and back pins on the blade guard slide all the way into the spreader slots, then tighten the top knob to secure the guard.

Re-installing Pawls

1. Loosen the knob on top of the spreader, then remove the blade guard.

2. Slide the pin in the pawl block into the second groove from the front of the spreader, as shown in **Figure 54**.

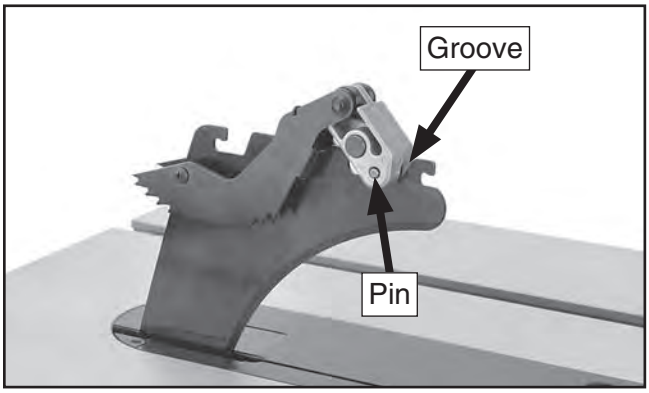

Figure 54. Re-installing pawls.

3. Press the button on the pawl block shown in **Figure 53**, then pivot the pawls down until they lock into place.

4. Re-install the blade guard onto the spreader and secure with the top knob.

When to Use the Blade Guard

The blade guard assembly MUST always be installed on the saw for all normal through cuts (those where the blade cuts all the way through the thickness of the workpiece).

When Not to Use the Blade Guard

The blade guard cannot be used for any non-through cuts (those in which the blade does not cut all the way through the thickness of the workpiece).

Sometimes the blade guard or its components can get in the way when cutting very narrow workpieces or other specialized cuts. Because the blade guard is provided to decrease your risk of injury, it should not be used if it gets in the way of making a safe cut. Use good judgment!

IMPORTANT: Whenever the blade guard cannot be used, the riving knife must be installed.

Riving Knife

The riving knife works in the same manner as the spreader on the blade guard assembly. It is a metal plate that prevents the newly cut workpiece from pinching the backside of the blade and causing kickback.

The key difference between the spreader and the riving knife is that the riving knife mounts below the blade's highest point of rotation, as shown in **Figure 55**.

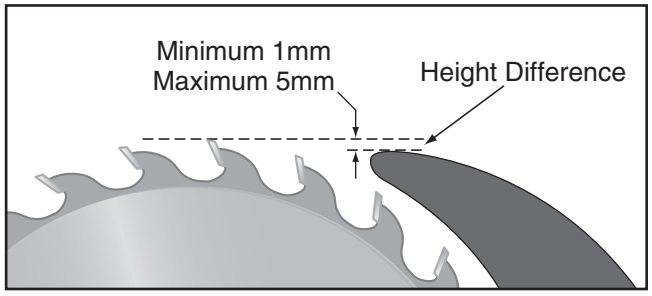

Figure 55. Height difference between riving knife and blade.

The height difference between the riving knife and the blade allows the workpiece to pass over the blade during non-through cuts (those in which the blade does not cut all the way through the thickness of the workpiece).

The riving knife acts as a barrier behind the blade to reduce the risk of hands being pulled into the blade if kickback occurs.

The riving knife must be kept within the range shown in **Figure 56**. For that reason, a 10" blade is required for operations that use a riving knife.

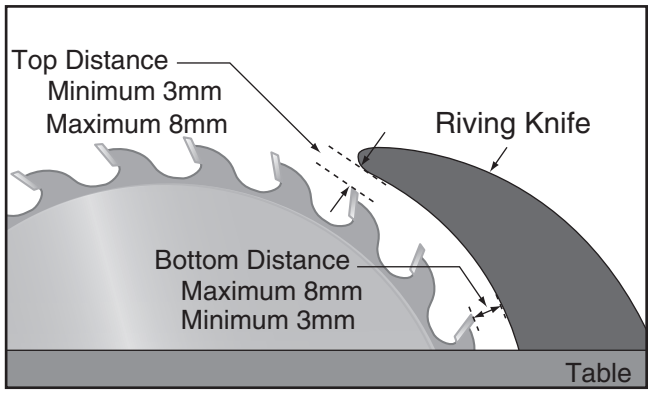

Figure 56. Allowable top and bottom distances between riving knife and blade.

⚠WARNING

In order to work properly, the riving knife cannot be bent or misaligned with the blade. If the riving knife gets accidentally bent, take the time to straighten it or just replace it. Using a bent or misaligned riving knife will increase the risk of kickback!

⚠CAUTION

To ensure that the riving knife works safely, the specifications listed in Blade Requirements on Page 36 MUST be met when installing new blades.

The riving knife MUST be aligned/adjusted to blade. *These requirements do not apply to dado blades.*

How to Install the Riving Knife

The riving knife is installed in a similar manner to the blade guard and spreader. Refer to **Blade Guard** on **Page 38** for installation instructions.

When to Use the Riving Knife

Use the riving knife for all non-through cuts made with a standard table saw blade (i.e., dadoes or rabbet cuts, and when using a tenoning jig), or when using a 10" diameter dado blade.

Also, use the riving knife for those special operations where the blade guard or its components get in the way of safe operation, such as with very narrow cuts.

When Not to Use the Riving Knife

Do not use the riving knife with a dado blade that has a diameter smaller than 10". Otherwise, the riving knife height will exceed the blade height and the workpiece will hit the riving knife during the cut, forcing the operator into a dangerous situation of trying to turn the saw off with the workpiece stuck halfway through the cut.

In addition, although it is possible to use the riving knife for through cutting operations, the blade guard assembly offers far more injury protection and risk reduction than the riving knife. Therefore, **we strongly recommend** that you use the blade guard assembly instead of the riving knife for through cuts.

Cutting a Zero Clearance Insert

A zero clearance insert is provided with the table saw to reduce workpiece tear out and increase user safety. The insert can be customized to fit a specific blade height or blade angle for the applicable cutting operation.

To install the zero clearance insert:

1. DISCONNECT SAW FROM POWER!

2. Check to make sure the blade is properly installed (refer to the instructions in **Blade Installation** on **Page 37**).

3. Install the table insert, as shown in **Figure 57**.

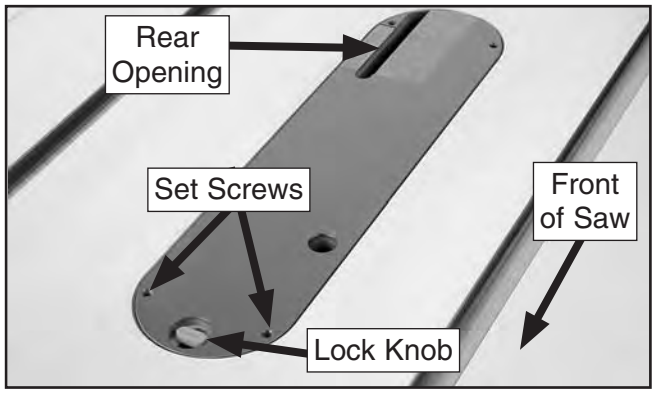

Figure 57. Insert knob in lock position.

4. Adjust the table insert set screws with a 2.5mm hex wrench to make sure the insert is flush with the table (use a straightedge as a guide), then turn the lock knob to secure the insert.

5. Center a board at least 2" thick and equal to the length of the table over the rear opening of the insert, then secure it with clamps at both ends, as shown in **Figure 58**. This will provide extra support for the insert and reduce tear out when cutting.

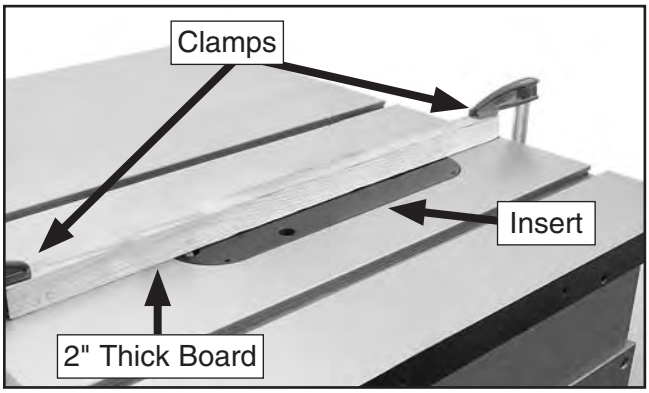

Figure 58. Securing insert with board and clamps.

6. Set the blade angle at 0°.

   Suggestion: *To retain the zero clearance ability of the insert included with this saw, we recommend only raising the blade into the insert at 90° during the following step.*

   —If you need a zero clearance insert for compound cuts, install an optional phenolic zero clearance table insert, Model T21880 (refer to **Page 61**) for each angled cut, then follow **Step 7.**

   —If you plan to use a dado blade to cut rabbets or dados, install the optional phenolic zero clearance table insert, Model T21880 (refer to **Page 61**), then follow **Step 7**.

   —If you do not require your insert to have a zero clearance fit, especially if you need to make a range of compound cuts, you can modify the insert included with this saw. Follow **Step 7**, then route the underside of the blade-cut slot to the same width as the rear opening (see **Figure 57**).

7. Connect the saw to power. Keep hands off of table top, do not stand directly behind the blade path, and wear eye protection.

8. Turn the saw ***ON***, then slowly raise the blade to the maximum height that will be used during normal operations.

8. Turn the saw ***OFF***, lower the blade completely, then remove the board and clamps.

9. Install the blade guard (refer to "Installing Blade Guard & Spreader" on **Page 38**).

Ripping

"Ripping" means cutting with the grain of a natural wood workpiece. In man-made materials such as MDF or plywood, ripping simply means cutting lengthwise.

⚠WARNING

Serious injury can be caused by kickback. Kickback is a high-speed expulsion of stock from the table saw toward an operator. The operator or bystanders may be struck by flying stock, or the operator's hands can be pulled into the blade during the kickback.

To make a rip cut:

1. Review **Preventing Kickback** on **Page 13** and take the necessary precautions to reduce the likelihood of kickback.

2. If using natural wood, joint one long edge of the workpiece on a jointer.

3. DISCONNECT THE SAW FROM POWER!

4. Ensure that the blade guard and spreader is installed.

5. Set the fence to the desired width of cut on the scale.

6. Adjust the blade height so the highest saw tooth protrudes approximately ¼" above the workpiece.

7. Set up safety devices such as featherboards or other anti-kickback devices.

8. Rotate the blade to make sure it does not come into contact with any of the safety devices.

9. Connect the saw to the power source, turn it ***ON***, and allow it to reach full speed.

   Note: *The jointed edge of the workpiece must slide against the fence during the cutting operation.*

10. Use a push stick to feed the workpiece through the saw blade, as shown in **Figure 59**, until the workpiece is completely past the saw blade.

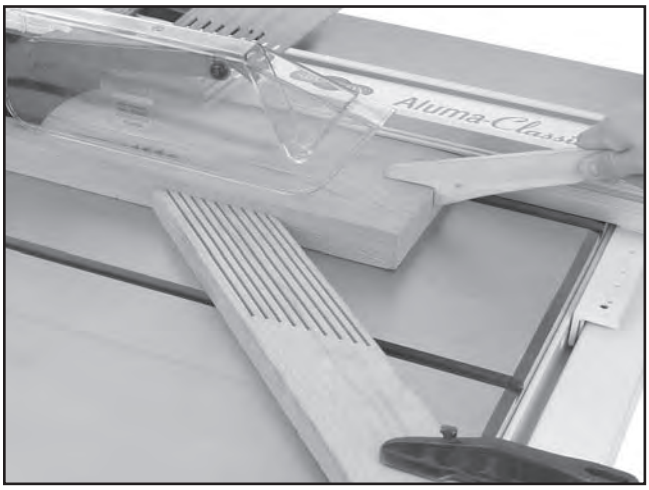

Figure 59. Typical ripping operation.

⚠WARNING

Turn *OFF* the saw and allow the blade to come to a complete stop before removing the cut-off piece. Failure to follow this warning could result in serious personal injury.

⚠WARNING

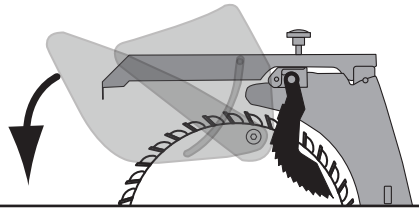

Keep the blade guard installed and in the down position. Failure to do this could result in serious personal injury or death.

Crosscutting

"Crosscutting" means cutting across the grain of a natural wood workpiece. In other man-made materials, such as MDF or plywood, crosscutting means cutting across the width of the workpiece.

To make a crosscut using the miter gauge:

1. DISCONNECT SAW FROM POWER!
2. Ensure that the blade guard/spreader is installed.
3. Move the rip fence aside and position the miter gauge, adjusted to 90°, in a miter slot.
4. Adjust the blade height so the teeth protrude approximately ¼" above the workpiece.
5. Slide the miter gauge near the blade and adjust the workpiece so the blade will cut on the waste side of the line.
6. Plug in the table saw, turn it ***ON,*** and allow it to reach full speed.
7. Hold the workpiece firmly against the face of the miter gauge (**Figure 60**), and ease it through the blade until the workpiece is completely past the saw blade.

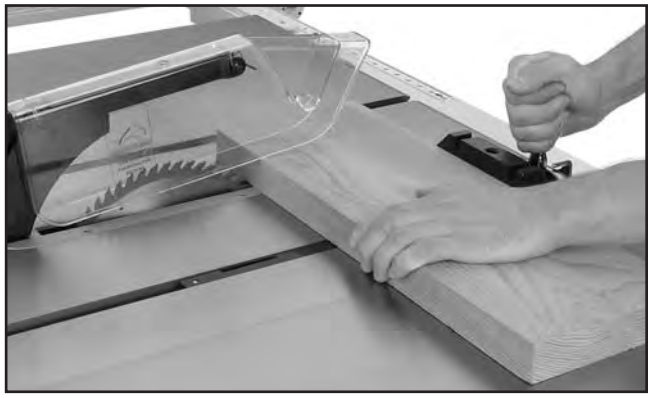

Figure 60. Typical crosscutting operation.

⚠WARNING

Turn *OFF* the saw and allow the blade to come to a complete stop before removing the cut-off piece. Failure to follow this warning could result in serious personal injury

Miter Cuts

A miter is an angled crosscut. Miters are usually cut in the same manner as crosscuts, using the miter gauge and a predetermined mark on the workpiece.

To perform a miter cut:

1. DISCONNECT SAW FROM POWER!
2. Ensure that the blade guard/spreader is installed.
3. Determine the angle of your cut. If the angle needs to be very precise, use a protractor to set the miter gauge to the blade.
4. Place the face of the miter gauge against the edge of the workpiece and place the bar across the face of the workpiece. Use the bar as a guide to mark your cut as shown in **Figure 61**.

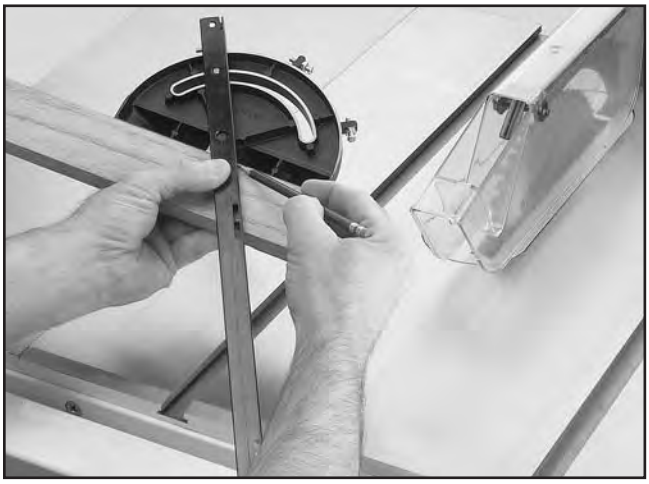

Figure 61. Example of marking miter line.

5. Place the miter gauge back into the slot and hold the workpiece firmly against the miter gauge body. Slide the miter gauge near the blade and adjust the workpiece so the blade will cut on the waste side of the line.
6. Proceed to make the cut in the same manner as described in the **Crosscutting** instructions.

Blade Tilt/Bevel Cuts

When the blade tilt stop bolts are properly adjusted (**Page 69**), the blade tilt handwheel allows the operator to tilt the blade to the left, anywhere between 0° and 45°. This is used most often when cutting bevels, compound miters or chamfers. **Figure 62** shows an example of the blade when tilted to 45°.

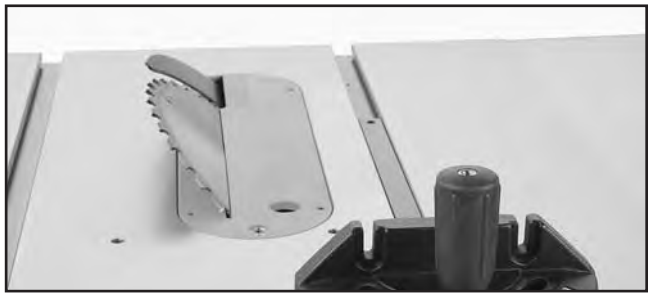

Figure 62. Blade tilted to 45° for bevel cutting on a typical table saw.

Dado Cutting

Commonly used in furniture joinery, a dado is a straight channel cut in the face of the workpiece. Dadoes can be cut using either a dedicated dado blade or a standard saw blade. **Figure 63** shows a cutaway view of a dado cut being made with a dado blade.

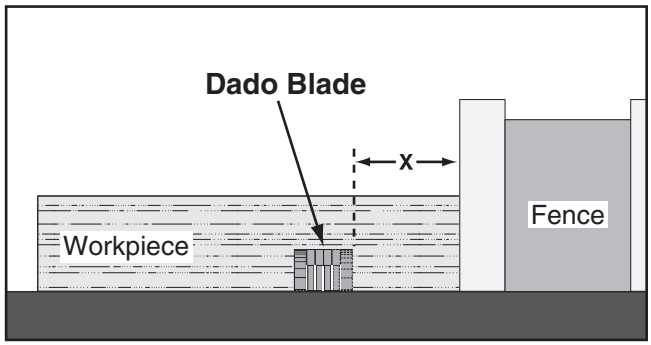

Figure 63. Example of a dado cut with a dado blade.

The the optional zero clearance insert, Model T21880 (**Page 61**), must be installed when using a dado blade. The insert included with the saw or Model T21880 must be used for a standard saw blade.

Installing a Dado Blade

1. DISCONNECT SAW FROM POWER!
2. Remove the table insert, the blade guard assembly or riving knife, and the saw blade.
3. Attach and adjust the dado blade system according to the dado blade manufacturer's instructions.
4. Install the optional Model T21880 zero clearance insert.

⚠WARNING

Dado blades have a higher risk of kickback than normal blades because their larger size applies stronger forces to the workpiece. This risk increases relative to the depth and width of the cut. To minimize your risk of serious personal injury, ensure that stock is flat and straight, and make multiple light cuts (rather than one deep cut) to achieve the desired cutting depth.

⚠WARNING

DO NOT make through cuts with a dado blade. Dado blades are only intended for non-through cuts. Failure to heed this warning could result in serious injury.

⚠WARNING

Never try to dado a warped board by holding it down against the table. If kickback occurs, your hand will likely be pulled into the blade, resulting in serious personal injury.

Cutting Dadoes with a Dado Blade

The **Figure** below demonstrates the sequential process of making multiple, light cuts that get progressively deeper. The actual number of cuts used should be determined by workpiece hardness, total dado depth, and feed rate. In general, if you hear the motor slow down during the cut, you are cutting too deep or feeding too fast.

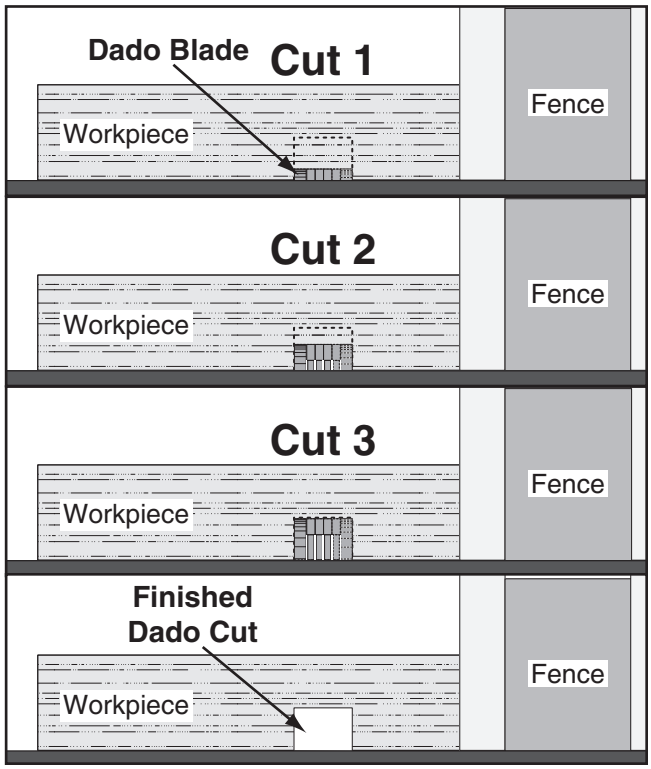

Figure 64. Example of dado being cut with multiple light cuts, instead of one deep cut.

To cut a dado with a dado blade:

1. Adjust the dado blade to the desired depth of cut.

2. Adjust the distance between the fence and the inside edge of the blade, as shown in **Figure 63**, to dado the length of a workpiece.

   — If dadoing across the workpiece, use the miter gauge and carefully line up the desired cut with the dado blade. DO NOT use the fence in combination with the miter gauge.

3. Reconnect the saw to the power source.

4. Turn the saw ***ON***. The blade should run smooth, with no vibrations.

5. When the blade has reached full speed, perform a test cut with a scrap piece of wood.

6. If the cut is satisfactory, repeat the cut with the actual workpiece.

Cutting Dadoes with a Standard Blade

A ripping blade (described on **Page 36**) is typically the best blade to use for cutting dadoes when using a standard blade, because it removes sawdust very efficiently.

To use a standard saw blade to cut dadoes:

1. DISCONNECT SAW FROM POWER!

2. Ensure that the riving knife and standard table insert are installed and properly adjusted. Do not use the standard insert if it has lost the zero clearance feature by modification; if so, you must install the optional zero clearance table insert, Model T21880.

3. Mark the width of the dado cut on the workpiece. Include marks on the edge of the workpiece so the cut path can be aligned when the workpiece is lying on the table.

4. Raise the blade up to the desired depth of cut (depth of dado channel desired).

5. Set up the saw for the type of cut you need to make, depending on if it is a rip cut (**Page 43**) or crosscut (**Page 44**).

6. Align the blade to cut one of the dado sides, as shown in **Figure 65**.

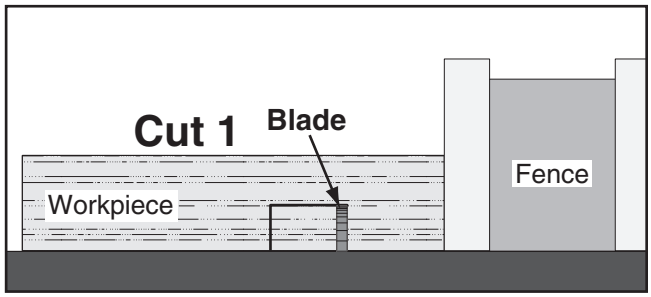

Figure 65. First cut for a single-blade dado.

7. Reconnect the saw to the power source and turn the saw ***ON***. Allow the blade to reach full speed, then perform the cutting operation.

8. Repeat the cutting operation on the other side of the dado channel, as shown in **Figure 66.**

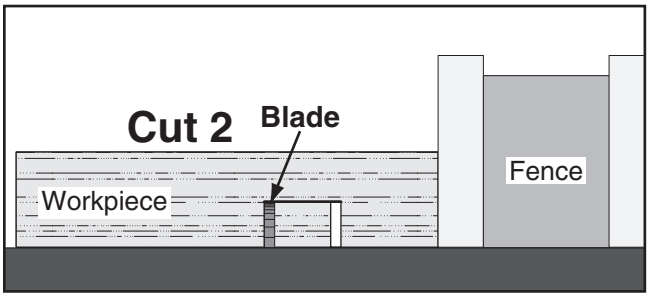

Figure 66. Second cut for a single blade dado.

9. Make additional cuts (see **Figure 67**) in the center of the dado to clear out the necessary material. The dado is complete when the channel is completely cleared out.

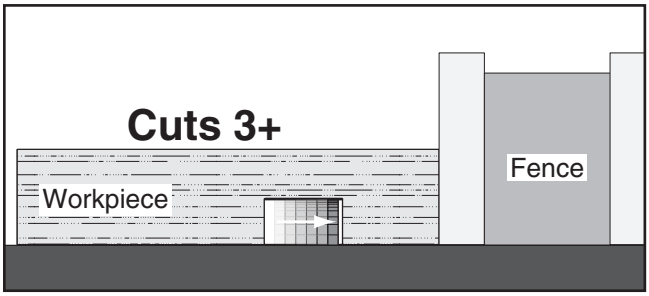

Figure 67. Additional single blade dado cuts.

Rabbet Cutting

Commonly used in furniture joinery, a rabbet is an L-shaped groove cut in the edge of the workpiece. Rabbets can be cut with either a dado blade or a standard saw blade.

Rabbet cutting on the edge of the workpiece with a dado blade requires a sacrificial fence (**Figure 68**). Make the sacrificial fence the same length as the fence and ¾" thick. Attach it to the fence with screws or clamps, making sure they are all secure and tight. Raise the blade into the sacrificial fence to the height needed.

When using a dado blade, the optional zero clearance table insert, Model T21880 (see **Page 61**), must be installed during rabbeting operations.

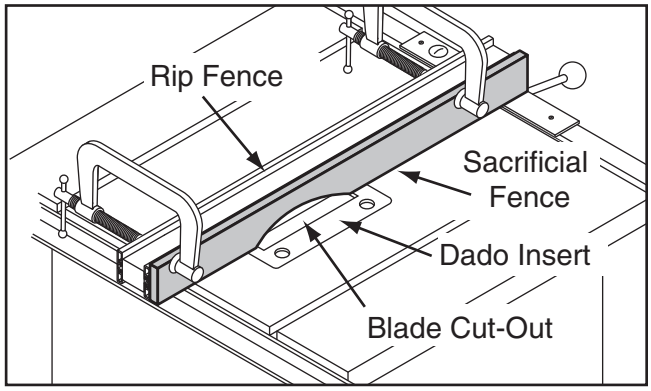

Figure 68. Sacrificial fence.

⚠WARNING

Dado blades have a higher risk of kickback than normal blades because their larger size applies stronger forces to the workpiece. This risk increases relative to the depth and width of the cut. To minimize your risk of serious personal injury, ensure that stock is flat and straight, and make multiple light cuts (rather than one deep cut) to achieve the desired cutting depth.

⚠CAUTION

Always use push sticks, featherboards, push paddles and other safety accessories whenever possible to increase safety and control during operations which require that the blade guard be removed from the saw. ALWAYS replace the blade guard after dadoing is complete.

Cutting Rabbets with a Dado Blade

1. DISCONNECT SAW FROM POWER!

2. Adjust the dado blade to the height needed for the rabbeting operation. When cutting deep rabbets, take more than one pass to reduce the risk of kickback.

3. Adjust the fence and align the workpiece to perform the cutting operation, as shown in **Figure 69**.

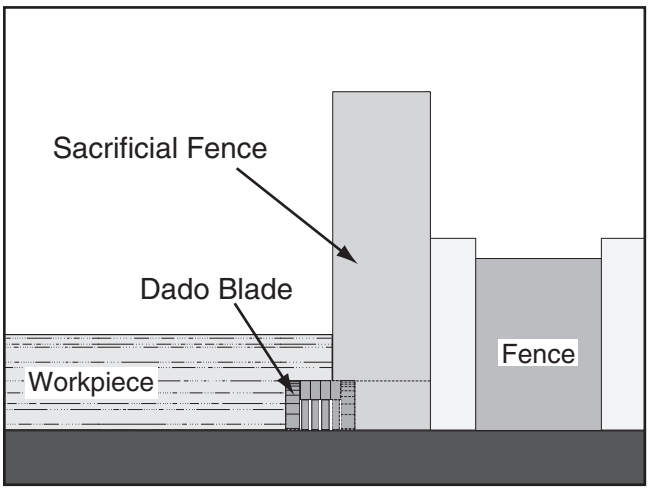

Figure 69. Rabbet cutting.

4. Reconnect the saw to the power source and turn the saw ***ON***. When the blade has reached full speed, perform a test cut with a scrap piece of wood.

   —If the cut is satisfactory, repeat the cut with the final workpiece.

Cutting Rabbets with a Standard Blade

A ripping blade is typically the best blade to use for cutting rabbets when using a standard blade because it removes sawdust very efficiently. (See **Page 36** for blade details.) Also, a sacrificial fence is not required when cutting rabbets with a standard blade.

To cut rabbets with the standard blade:

1. DISCONNECT SAW FROM POWER!

2. Ensure that the riving knife and standard table insert are installed. Do not use the standard insert if it has lost the zero clearance feature by modification; if so you must install the optional Model T21880 zero clearance insert.

3. Mark the width of the rabbet cut on the edge of the workpiece, so you can clearly identify the intended cut while it is laying flat on the saw table.

4. Raise the blade up to the desired depth of cut (depth of rabbet channel desired).

5. Stand the workpiece on edge, as shown in **Figure 70,** then adjust the fence so the blade is aligned with the inside of your rabbet channel.

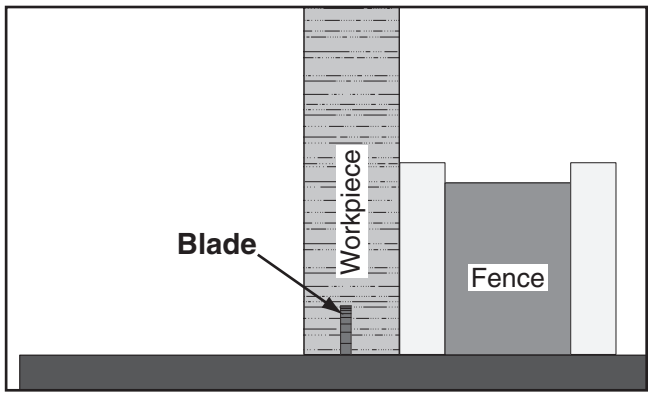

Figure 70. Rabbet cutting with a standard blade.

—If the workpiece is very tall or is unstable when placed against the fence, lay it flat on the table and use a dado blade to perform the rabbet cut.

⚠WARNING

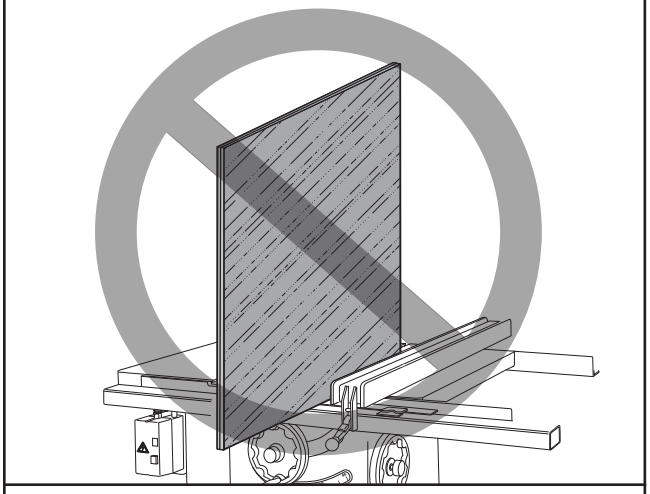

DO NOT place a tall board on edge to perform a rabbet cut with a standard blade. Workpieces that are too tall to properly support with the fence can easily shift during operation and cause kickback. Instead, place the stock flat on the saw and perform the rabbet cut with a dado blade, as instructed on Page 48.

6. Reconnect the saw to the power source, then perform the cut.

7. Lay the workpiece flat on the table, as shown in **Figure 71**, adjust the saw blade height to intersect with the first cut, then perform the second cut to complete the rabbet.

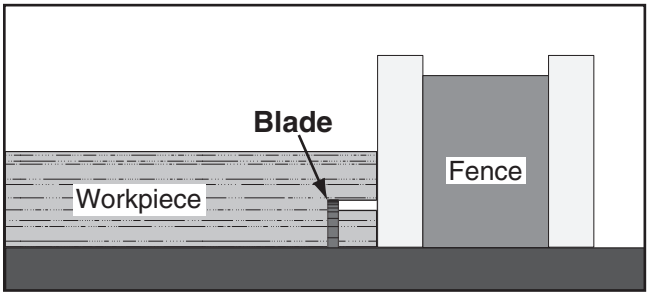

Figure 71. Second cut to create a rabbet.

Resawing

⚠WARNING

Resawing operations require proper procedures to avoid serious injury. Extra care must be taken to prevent kickback when resawing. Any tilting or movement of the workpiece away from the fence will cause kickback. Be certain that stock is flat and straight. Failure to follow these warnings could result in serious personal injury.

Resawing is the process of cutting a thick piece of stock into one or more thinner pieces. Although resawing can be done with a table saw, we strongly recommend that you use a bandsaw instead.

A bandsaw is the ideal machine for resawing, and resawing with one is fairly easy and safe. A table saw is not intended for resawing, and resawing with one is difficult and dangerous due to the increased risk of kickback from binding and deep cuts, and the increased risk of injury from having to remove the guard.

If you insist on resawing with a table saw, DO NOT do so without using a resaw barrier and wearing a full face shield. The following instructions describe how to build a resaw barrier and add an auxiliary fence to your standard fence, to reduce the risk injury from resawing on a table saw.

Note: This table saw can only resaw wood that is less than 6⅜" tall.

Making Resaw Barrier

The resaw barrier acts in tandem with the rip fence when resawing to provide tall support for the workpiece to minimize the probability of it binding against the blade and causing kickback.

Tools Needed:	**Qty**
Table Saw	1
Jointer and Planer	Recommended
Clamps	2 Minimum
Drill and Drill Bits	1

Components Needed for Resaw Barrier:	
Wood* ¾" x 6" x Length of Fence	1
Wood* ¾" x 3" x Length of Fence	1
Wood Screws #8 x 2"	4
Wood Glue	As Needed

* *Only use furniture grade plywood, kiln dried hardwood, or HDPE plastic to prevent warping.*

To build the resaw barrier:

1. Cut your wood pieces to the size specified above. If you are using hardwood, cut the pieces oversize, then joint and plane them to the correct size to make sure they are square and flat.

2. Pre-drill and countersink four holes approximately ⅜" from the bottom of the 6" tall wood piece.

3. Glue the end of the 3" board, then clamp the boards at a 90° angle with the larger board in the vertical position, as shown in **Figure 72**, then fasten together with the wood screws.

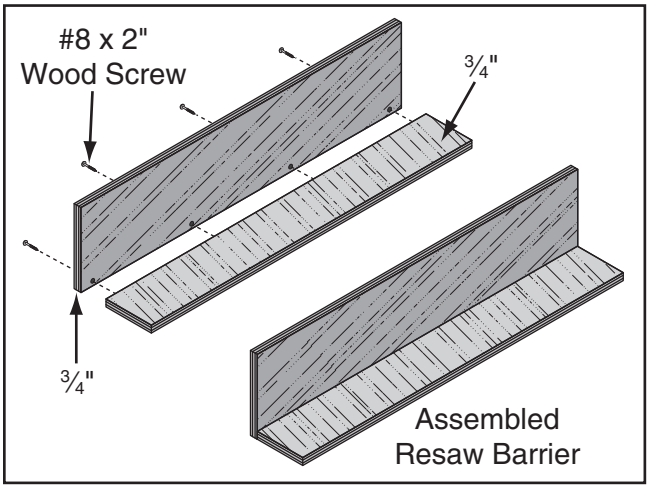

Figure 72. Resaw barrier.

Auxiliary Fence

The auxiliary fence is necessary if you are resawing a workpiece that is taller than it is wide. It should be no less than ½" shorter than the board to be resawn.

Components Needed for the Auxiliary Fence:
Wood* ¾" x (Height) x Length of Fence 1
Flat Head Screws M8-1.25 x 25 (Not included) .4
Hex Nuts M8-1.25 (Included) 4
Flat Washers 8mm (Included) 4

* *Only use furniture grade plywood, kiln dried hardwood, or or HDPE plastic to prevent warping.*

Tools Needed for the Auxiliary Fence:
Table Saw 1
Jointer and Planer ..... Recommended
Clamps ..... 2 Minimum
Drill and Drill Bits 1
C-Clamps.....2
Center Punch or Nail.....1

To build the auxiliary fence:

1. Cut the auxiliary fence board to size as specified above. If you are using hardwood, cut the board oversize, then joint and plane the board to the correct size to make sure the board is square and flat.

2. Pull the end cap off of the standard fence, then remove four hex nuts, flat washers, t-bolts and the fence face from the fence body.

3. Place the auxiliary fence next to the open side of the fence, clamp it in place, then flip the assembly over.

4. Reach through the access holes and use a center punch or nail to mark the four mounting hole locations onto the auxiliary fence.

5. Remove the auxiliary fence, then pre-drill and countersink four mounting holes into it.

6. Thread the flat head screws through the auxiliary fence and into the hex nuts and flat washers inside the standard fence body, and tighten securely, as shown in **Figure 73**.

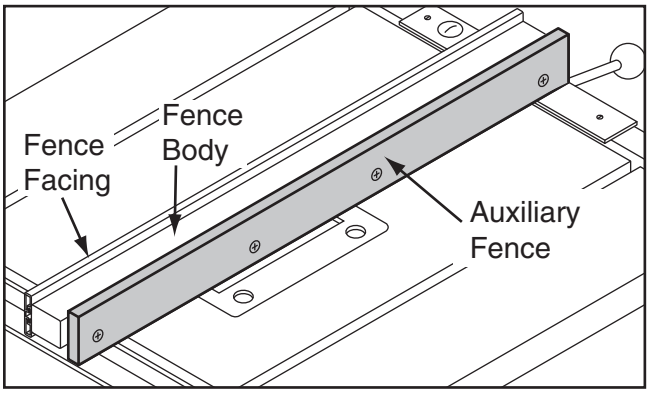

Figure 73. Auxiliary fence.

Resawing Operations

The table saw motor is pushed to its limits when resawing. If the motor starts to bog down, slow down your feed rate. Motor overloading and blade wear can be reduced by using a ripping blade. Ripping blades are designed to clear the sawdust quickly.

Components Needed for Resawing:
Zero Clearance Insert.....1
Ripping Blade 10".....1
Riving Knife 1
Clamps 2
Shop Made Auxiliary Fence 1
Shop Made Resaw Barrier 1

⚠WARNING

You may experience kickback during this procedure. Stand to the side of the blade and wear a full face shield to prevent injury when resawing.

To perform resawing operations:

1. DISCONNECT SAW FROM POWER!

2. Remove the standard table insert and the blade guard/spreader assembly.

3. Install a ripping blade, install the riving knife, lower the blade below the table surface, then re-install the standard insert.

   Do not use the standard insert if it has lost the zero clearance feature by modification; if so you must install the optional Model T21880.

4. Attach the auxiliary fence to the standard fence and set it to the desired width.

   Note: *Account for blade kerf, the rough cut made by the blade, and the inaccuracy of the fence scale when the auxiliary fence is installed when figuring out the correct width.*

5. Place the workpiece against the auxiliary fence and slide the resaw barrier against the workpiece, as shown in **Figure 74**. Now clamp the resaw barrier to the top of the table saw at both ends.

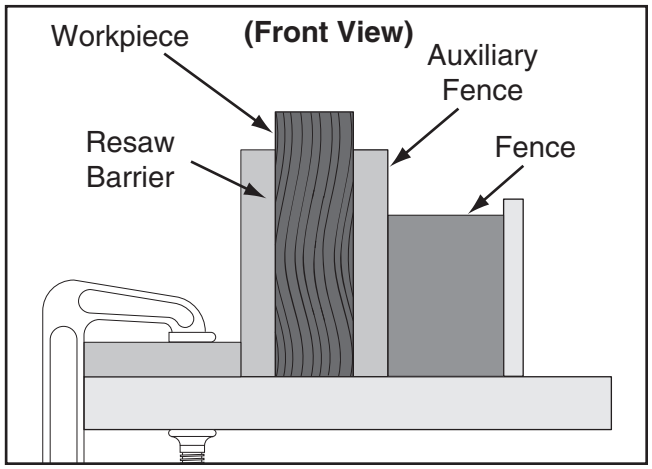

Figure 74. Ideal resaw workpiece setup.

6. Slide the workpiece over the blade to make sure it moves smoothly, then remove the workpiece.

7. Raise the blade approximately an inch, or close to half the height of the workpiece (**Figure 75**), whichever is less.

⚠WARNING

The danger of kickback increases relative to the depth of a cut. Reduce the risk of kickback by making multiple passes to achieve the desired depth of cut. Failure to follow these warnings could result in serious personal injury.

⚠CAUTION

Always use push sticks or push paddles to increase safety and control during operations which require that the blade guard and spreader must be removed from the saw. ALWAYS replace the blade guard after resawing is complete.

8. Plug in the table saw, turn it ***ON***, and use a push stick to feed the workpiece through the blade using a slow, steady feed rate.

9. Flip the workpiece end for end, keeping the same side against the fence, and run the workpiece through the blade.

10. Repeat **Steps 7–9** until the blade is close to half of the height of the board to be resawn. The ideal completed resaw cut will leave an ⅛" connection when the resawing is complete, as shown in **Figure 75**. Leaving an ⅛" connection will reduce the risk of kickback.

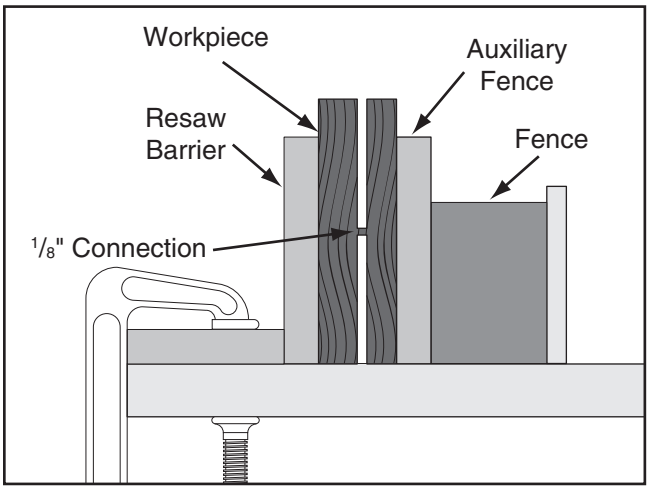

Figure 75. Ideal completed resaw cut.

11. Turn ***OFF*** the table saw, then separate the parts of the workpiece and hand plane the remaining ridge to remove it.

12. When finished resawing, remove the resaw barrier and auxiliary fence, then re-install the blade guard/spreader or riving knife and standard table insert.

SECTION 5: SHOP MADE SAFETY ACCESSORIES

Featherboards

Easily made from scrap stock, featherboards provide an added degree of protection against kickback, especially when used together with push sticks. They also maintain pressure on the workpiece to keep it against the fence or table while cutting, which makes the operation easier and safer because the cut can be completed without the operator's hands getting near the blade. The angled ends and flexibility of the fingers allow the workpiece to move in only one direction.

Making a Featherboard

This sub-section covers the two basic types of featherboards: 1) Those secured by clamps to the table or fence, or 2) those secured by a wood runner that mounts in the table saw miter slot.

Material Needed for Featherboard Mounted with Clamps

Hardwood ¾" x 3"–6" x 10" x 28".....1

Material Needed for Featherboard Mounted in Miter Slot

Hardwood ¾" x 3"–6" x 10"-28".....1
Hardwood ⅜" x (Miter Slot Width) x 5"L 1
Wing Nut ¼"-20.....1
Flat Head Screw ¼"-20 x 2".....1
Flat Washer ¼"-20.....1

To make a featherboard:

1. Cut a hardwood board approximately ¾" thick to size. The length and width of the board can vary according to your design. Most featherboards are 10"–28" long and 3"–6" wide. Make sure the wood grain runs parallel with the length of the featherboard, so the fingers you will create in **Step 3** will bend without breaking.

2. Cut a 30° angle at one end of the board.

⚠CAUTION

We recommend using a bandsaw for making fingers in the next step because it tends to be safer. A table saw can be used, but it will over-cut the underside of the ends, produce a thicker kerf, and require you to stop the blade half-way through the cut, which can be dangerous.

3. Make a series of end cuts with the grain ⅜"–¼" apart and 2"–3" long, as shown in **Figure 76** (A). Alternatively, start cuts at 2"-3" deep, then make them progressively deeper, as shown in **Figure 76** (B).

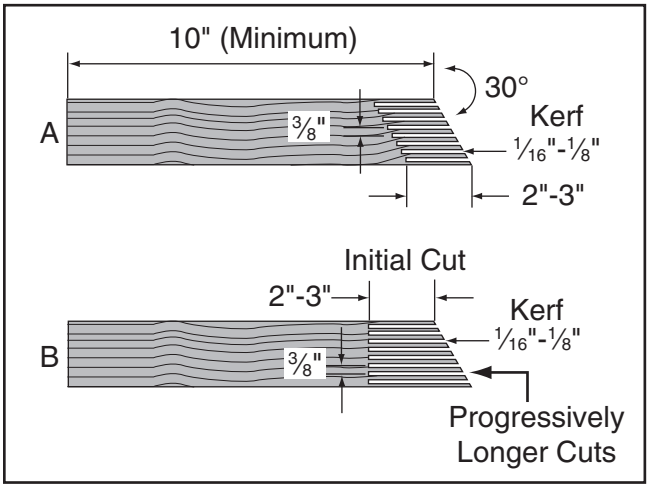

Figure 76. Patterns for featherboards (top view shown).

IMPORTANT: Cuts made across the grain will result in weak fingers that easily break when flexed. When made correctly, the fingers should withstand flexing from moderate pressure. To test the finger flexibility, push firmly on the ends with your thumb. If the fingers do not flex, they are likely too thick (the cuts are too far apart).

NOTICE

Only Steps 1–3 are required to make a clamp-mounted featherboard. Refer to Page 55 for instructions on clamping.

4. Rout a ¼"–⅜" wide slot 4"–5" long in the workpiece and 1"–2" from the short end of the featherboard (see **Figure 77**).

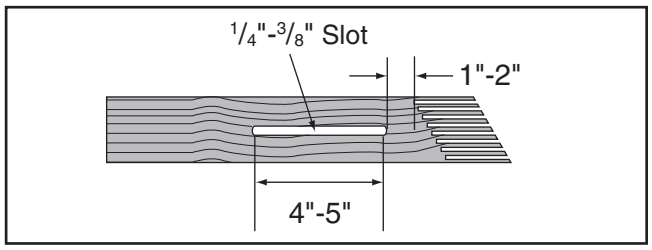

Figure 77. Slot routed in featherboard.

5. Cut a miter bar that will fit in the table miter slot approximately 5" long, as shown in **Figure 78**.

Tip: *Consider making the miter bar longer for larger featherboards—approximately half the length of the total featherboard—to support the force applied to the featherboard during use.*

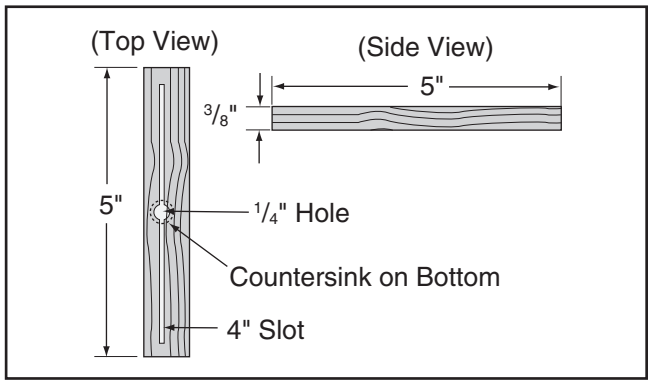

Figure 78. Miter bar pattern.

6. Drill a ¼" hole in the center of the bar, then countersink the bottom to fit a ¼"-20 flat head screw.

7. Mark a 4" line through the center of the countersunk hole, then use a jig saw with a narrow blade to cut it out.

8. Assemble the miter bar and featherboard with a ¼"-20 x flat head screw, flat washer, and a wing nut or a star knob (see **Figure 79**). Congratulations! Your featherboard is complete.

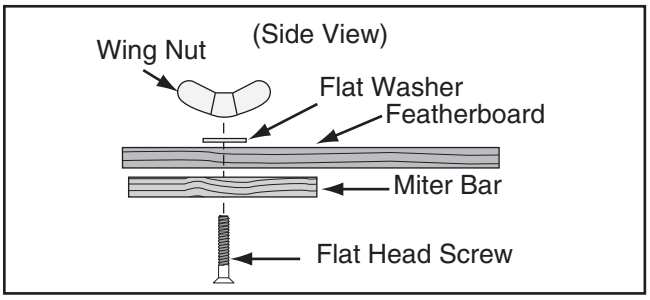

Figure 79. Assembling miter slot featherboard components.

Note: *The routed slot, countersink hole, and the flat head screw are essential for the miter bar to clamp into the miter slot. When the wing nut is tightened, it will draw the flat head screw upward into the countersunk hole. This will spread the sides of the miter bar and force them into the walls of the miter slot, locking the featherboard in place.*

Tip: *The length of the flat head screw depends on the thickness of the featherboard—though 1½" to 2" lengths usually work.*

Now, proceed to **Mounting Featherboard in Miter Slot** on **Page 55**.

Mounting Featherboards with Clamps

1. Lower the saw blade, then adjust the fence to the desired width and secure it.

2. Place the workpiece against the fence, making sure it is 1" behind the blade.

3. Place a featherboard on the table away from the blade so all fingers point forward and contact the workpiece (see **Figure 80**).

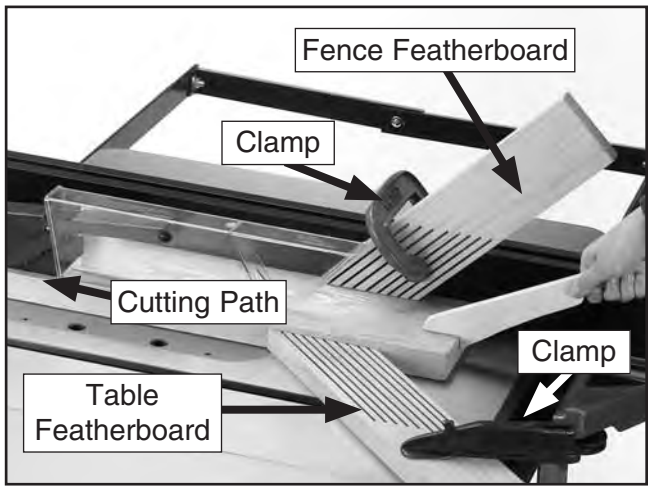

Figure 80. Example of featherboards secured with clamps.

4. Secure the featherboard to the table with a clamp.

5. Check the featherboard with your thumb to ensure it is secure.

   —If the featherboard moves, tighten the clamp more.

6. Mount a second featherboard to the fence with another clamp (see **Figure 80**), then repeat **Step 5** to ensure it is secure.

Mounting Featherboard in Miter Slot

1. Lower the saw blade, then adjust the fence to the desired width and secure it.

2. Place the workpiece evenly against the fence, making sure it is 1" behind the blade.

3. Slide the featherboard miter bar into the miter slot, making sure the fingers slant toward the blade, as shown in **Figure 81**.

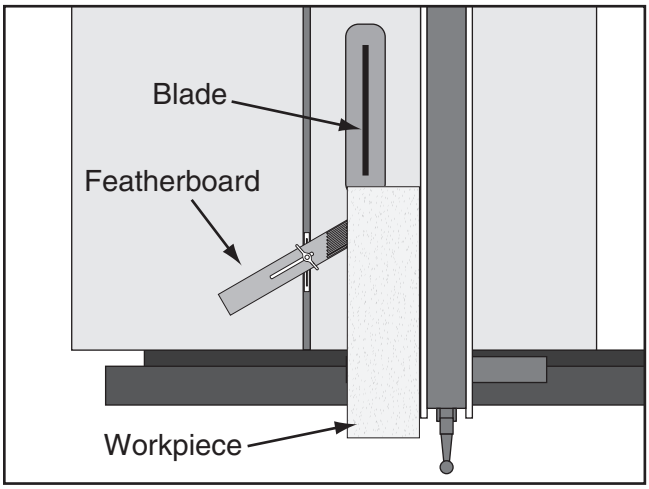

Figure 81. Featherboard installed in miter slot and supporting workpiece for ripping cut.

4. Position the fingered edge of the featherboard against the edge of the workpiece, so that all of the fingers contact the workpiece. Slide the featherboard toward the blade until the first finger is nearly even with the end of the workpiece, which should be 1" away from the blade.

5. Double check the workpiece and the featherboard to ensure they are properly positioned as described in **Step 4**. Then secure the featherboard to the table. Check the featherboard by hand to make sure it is tight.

   Note: *The featherboard should be placed firmly enough against the workpiece to keep it against the fence but not so tight that it is difficult to feed the workpiece.*

Push Sticks

When used correctly, push sticks reduce the risk of injury by keeping hands away from the blade while cutting. In the event of an accident, a push stick can also absorb damage that would have otherwise happened to hands or fingers.

Using a Push Stick

Use push sticks whenever your hands will get within 12" of the blade. To maintain control when cutting large workpieces, start the cut by feeding with your hands then use push sticks to finish the cut, so your hands are not on the end of the workpiece as it passes through the blade.

Feeding: Place the notched end of the push stick against the end of the workpiece (see inset **Figure** below), and move the workpiece into the blade with steady downward and forward pressure.

Supporting: A second push stick can be used to keep the workpiece firmly against the fence while cutting. When using a push stick in this manner, only apply pressure before the blade; otherwise, pushing the workpiece against or behind the blade will increase the risk of kickback (see "Push Stick Prohibition Zone" in the **Figure** below).

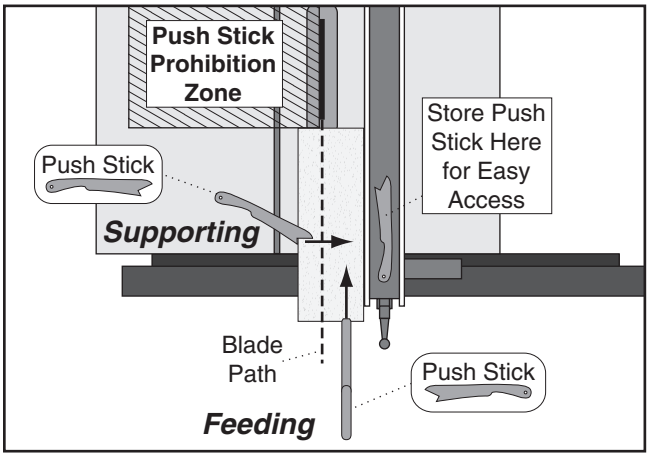

Figure 82. Using push sticks to rip narrow stock.

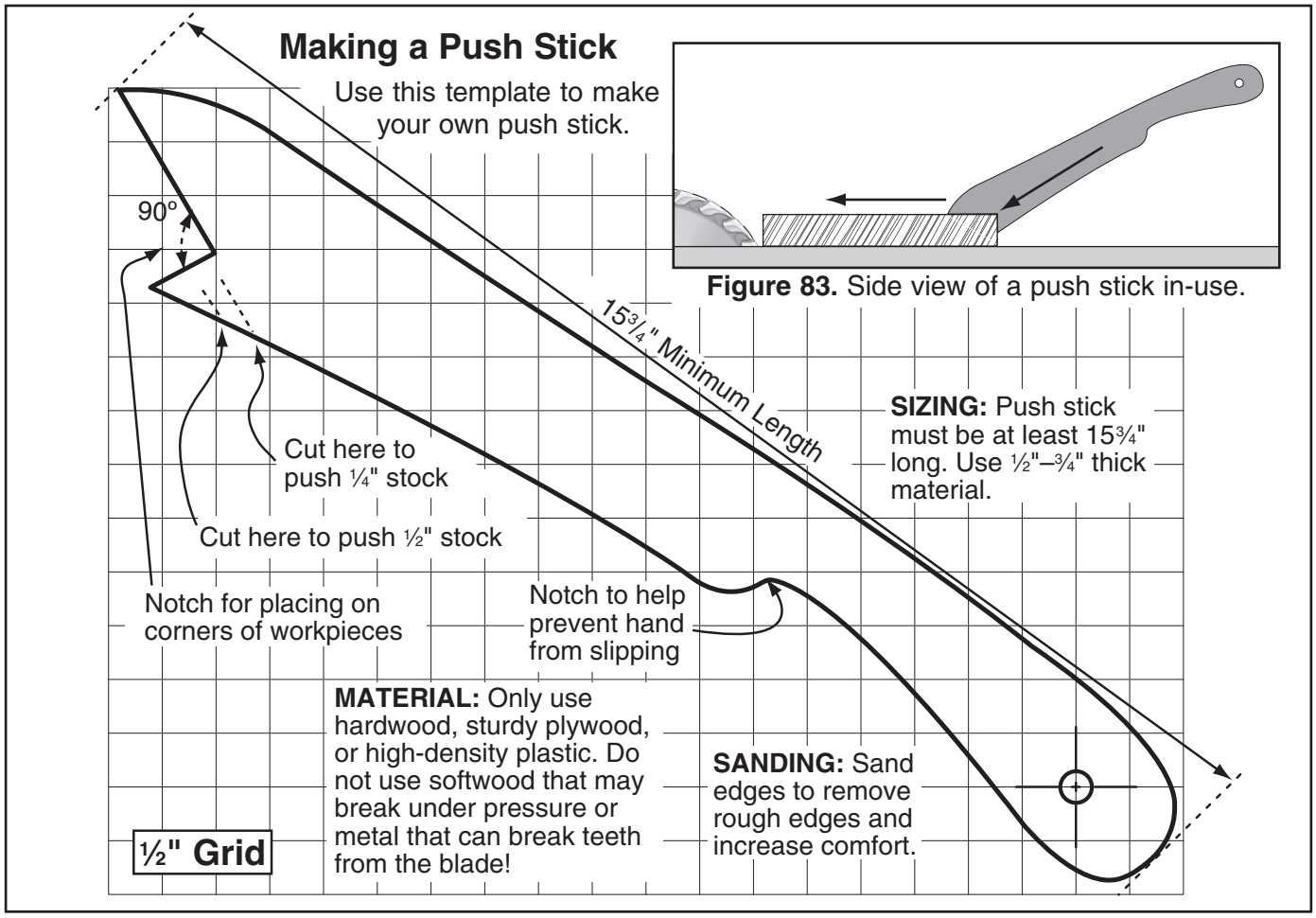

Figure 83. Side view of a push stick in-use.

Figure 84. Template for a basic shop-made push stick (not shown at actual size).

Push Blocks

When used correctly, a push block reduces the risk of injury by keeping hands away from the blade while cutting. In the event of an accident, a push block often takes the damage that would have otherwise happened to hands or fingers.

Using a Push Block

A push block can be used in place of or in addition to a push stick for feeding workpieces into the blade. Due to their design, push blocks allow the operator to apply firm downward pressure on the workpiece that could not otherwise be achieved with a push stick.

The push block design on this page can be used in two different ways (see inset **Figure** below). Typically, the bottom of the push block is used until the end of the workpiece reaches the blade.

The notched end of the push block is then used to push the workpiece the rest of the way through the cut, keeping the operator's hands at a safe distance from the blade. A push stick is often used at the same time in the other hand to support the workpiece during the cut (see "Using a Push Stick" on previous page).

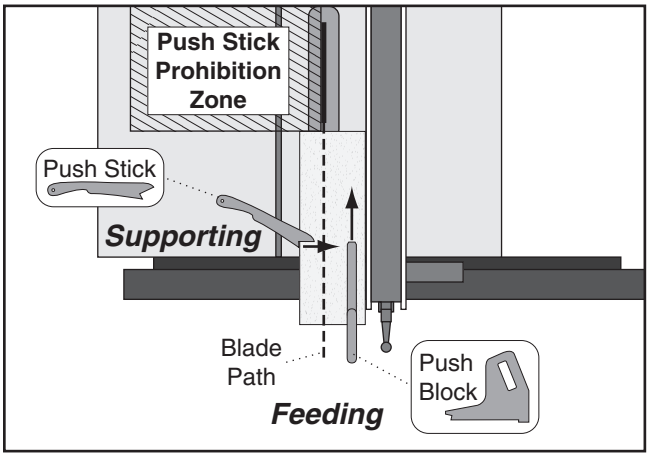

Figure 86. Using a push block and push stick to make a rip cut.

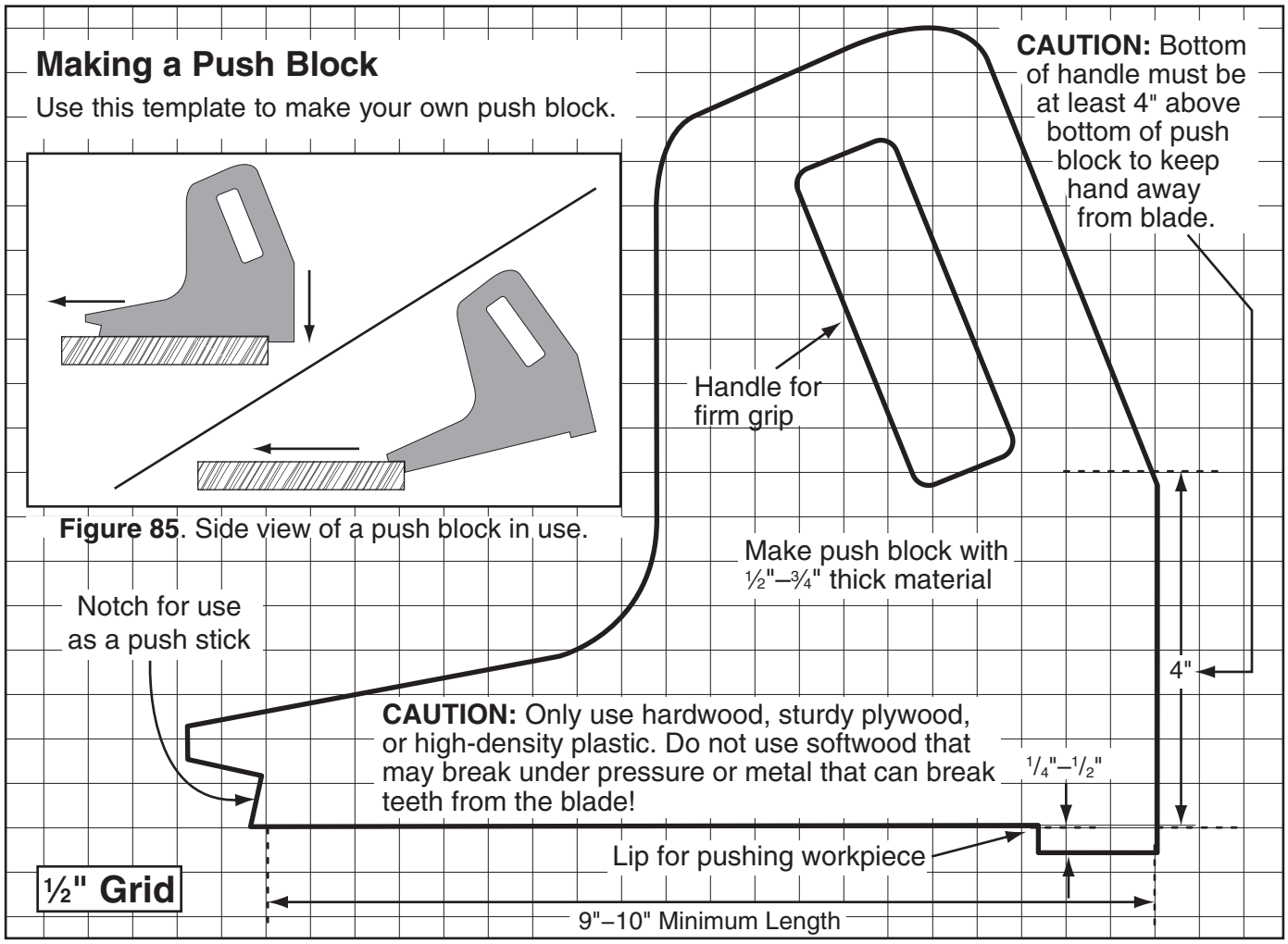

Figure 85. Side view of a push block in use.

Figure 87. Template for a shop-made push block (shown at 50% of full size).

Narrow-Rip Auxiliary Fence & Push Block

There are designs for hundreds of specialty jigs that can be found in books, trade magazines, and on the internet. These types of jigs can greatly improve the safety and consistentcy of cuts. They are particularly useful during production runs when dozens or hundreds of the same type of cut need to be made.

The narrow-rip auxiliarly fence and push block system shown in this section is an example of a specialty jig that can be made to increase the safety of very narrow rip cuts.

Material Needed for Auxiliary Fence
Hardwood ¾" x 3" x Length of Fence 1
Plywood ¾" x 5¼" x Length of Fence 1
Wood Screws #8 x 1½" 8

Material Needed for Push Block
Hardwood or Plywood ¾" x 15" x 5⅝" 1
Hardwood or Plywood ¾" x 10" x 5"–9" 1
Cyanoacrylate Wood Glue .....Varies
Wood Screws #8 x 1½" .....As Needed

Making a Narrow-Rip Auxiliary Fence and Push Block

1. Cut a piece of ¾" thick plywood 5¼" wide and as long as your table saw fence; cut a piece of ¾" thick hardwood 3" wide and as long as your table saw fence, as shown in **Figure 88.**

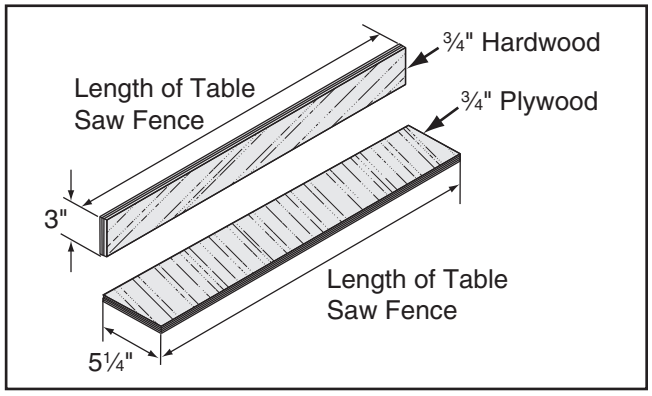

Figure 88. Auxiliary fence dimensions.

Note: *We recommend cutting the hardwood board oversize, then jointing and planing it to the correct size to make sure the board is square and flat. Only use furniture grade plywood or kiln dried hardwood to prevent warping.*

2. Pre-drill and countersink eight pilot holes ⅜" from the bottom of the 3" wide board, then secure the boards together with eight #8 x 1½" wood screws, as shown in **Figure 89**.

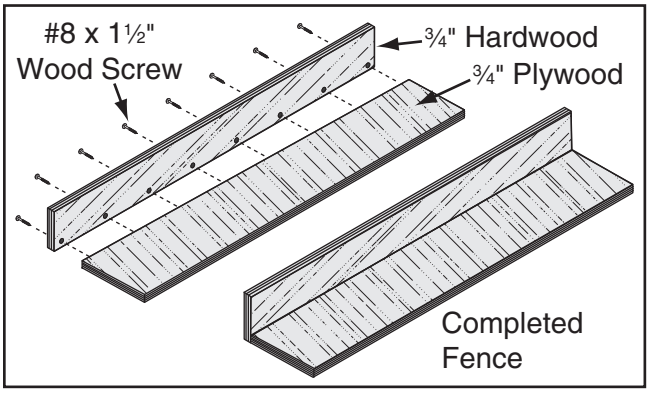

Figure 89. Location of pilot holes.

3. Using the ¾" material you used in the previous steps, cut out pieces for the push block per the dimensions shown in **Figure 90**; for the handle, cut a piece 10" long by 5"–9" high and shape it as desired to fit your hand.

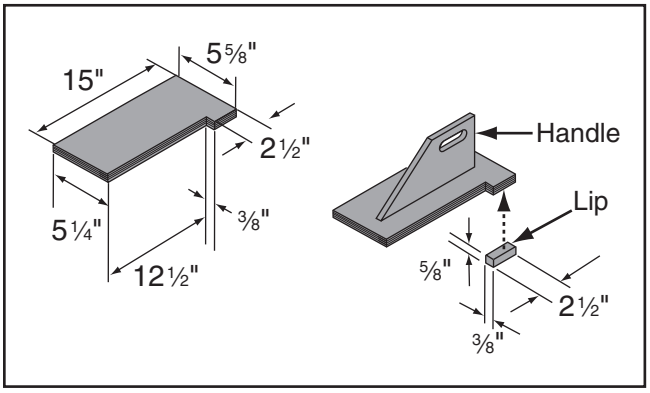

Figure 90. Push block dimensions and construction.

4. Attach the handle to the base with #8 x 1½" wood screws, and attach the lip to the base with cyanoacrylate type wood glue.

Using Auxiliary Fence & Push Block

1. Place the auxiliary fence on the table and clamp it to the fence at both ends, then adjust the distance between the auxiliary fence and the blade—this determines how wide the workpiece will be ripped (see **Figure 91**).

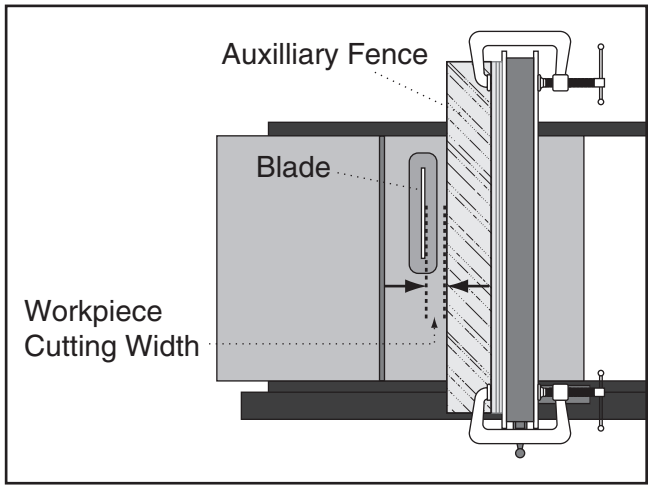

Figure 91. Adjusting ripping distance between blade and auxiliary fence.

2. Install the blade guard, then remove the spreader pawls, as explained on **Page 39**, so they do not interfere with the push block lip.

⚠WARNING

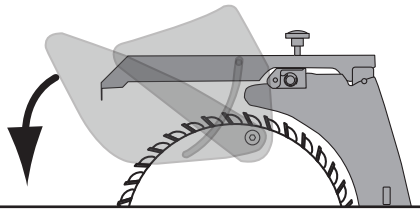

Keep the blade guard installed and in the down position. Failure to do this could result in serious personal injury or death.

3. Place the workpiece 1" behind the blade and evenly against the table and the auxiliary fence.

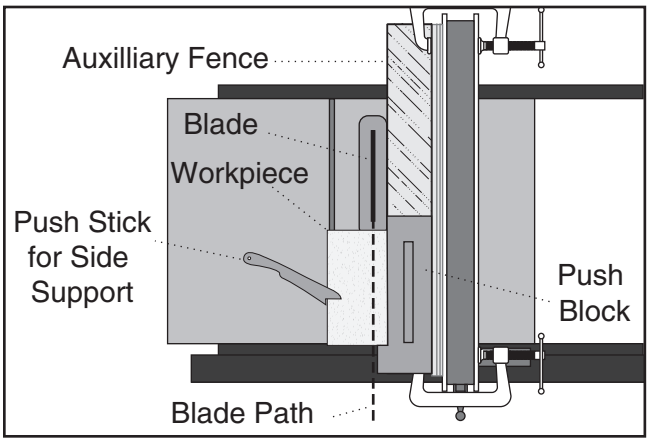

Figure 92. Push block in position to push workpiece through blade.

4. Turn the saw ***ON***, then begin ripping the workpiece using a push stick for side support.

   As the workpiece nears the end of the cut, place the push block on the auxiliary fence with the lip directly behind the workpiece, then release the push stick just before it is even with the blade (see **Figure 93**).

   Guide the workpiece the rest of the way through the cut with the push block, then reinstall the pawls on the spreader when cutting operations are finished.

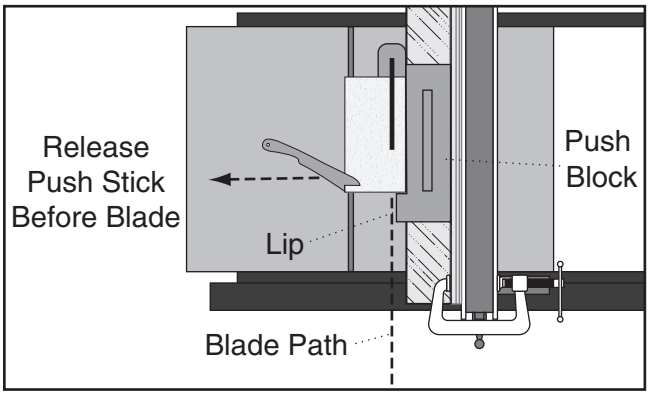

Figure 93. Ripping with push block.

⚠WARNING

Turn the saw *OFF* and allow the blade to come to a complete stop before removing the cut-off piece. Failure to follow this warning could result in serious personal injury.

Outfeed & Support Tables

One of the best accessories for improving the safety and ease of using a table saw is simply placing a large table (outfeed table) behind the saw to catch the workpiece (see **Figure 94**). Additionally, another table to the left of the saw (support table) can also help support large workpieces so they can be cut safely and accurately.

Figure 94. Example of outfeed & support tables.

Crosscut Sled

A crosscut sled (see **Figure 95**) is a fantastic way to improve the safety and accuracy of crosscutting on the table saw. Most expert table saw operators use a crosscut sled when they have to crosscut a large volume of work, because the sled offers substantial protection against kickback when crosscutting.

Figure 95. Example of crosscut sled.

SECTION 6: AFTERMARKET ACCESSORIES FROM GRIZZLY

⚠WARNING

Some aftermarket accessories can be installed on this machine that could cause it to function improperly, increasing the risk of serious personal injury. To minimize this risk, only install accessories recommended for this machine by Grizzly.

NOTICE

Refer to the newest copy of the Grizzly Catalog for other accessories available for this machine.

Call 1-800-523-4777 To Order

H8085—Front Tool Box for G0651/G0652
This heavy-duty tool box features powder coated paint and ball bearing slides. 25"L x 22½"H x 15"D.

Figure 96. Model H8085 Tool Box.

T21880—Zero Clearance Insert for G0651/G0652
Made especially for the G0651/G0652 table saw. Height is easily adjustable. Special phenolic material.

H7583—Grizzly Tenoning Jig
Our fully adjustable tenoning jig handles stock up to 3¼" thick and features an adjustable bevel angle with a 90° to 75° range. The two large grip handles, adjustable guide bar, multi-position control levers, and extra large clamping handwheel will ensure accurate and repeatable results. A top seller!

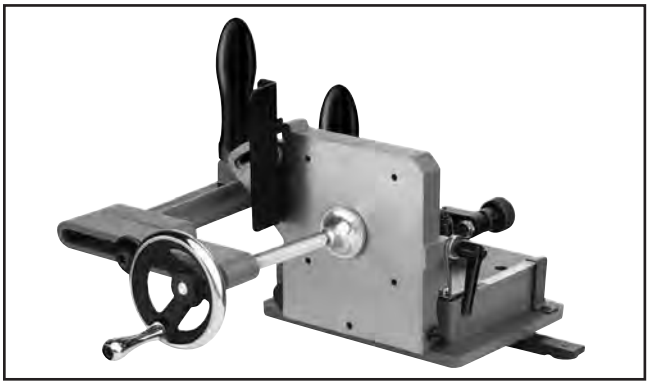

Figure 97. Model H7583 Tenoning Jig.

G4173—Baby Power Feeder 110V
G4176—¼ HP Power Feeder 110V
G4179—½ HP Power Feeder 220V
G4181—1 HP Power Feeder 220V
Installing a power feeder on your table saw will make repetitive cuts much easier and safer. Can be installed on nearly any table saw. Easy to adjust wherever needed, including out of the way when not needed! A must for any production shop.

Figure 98. G4179 Power Feeder.

G3445—Precision Saw Tool
This high impact plastic Saw Aid™ quickly measures blade height and angle and can also serve as a solid push stick. Includes a graduated ruler guide and center finder.

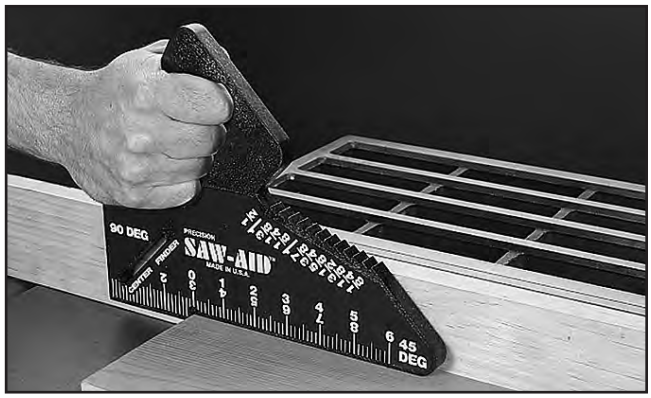

Figure 99. G3445 Precision Saw Tool.

H3309—SHOP FOX® Featherboard
Designed to lock into a standard ⅜" x ¾" miter slot, this featherboard is fully adjustable to accommodate a wide range of workpieces.

Figure 100. H3309 SHOP FOX® Featherboard.

H8029—5 Piece Safety Kit
This kit has four essential jigs. Includes two push blocks, push stick, featherboard and combination saw and router gauge. Featherboard fits ⅜" x ¾" miter slots. Made of high visibility yellow plastic.

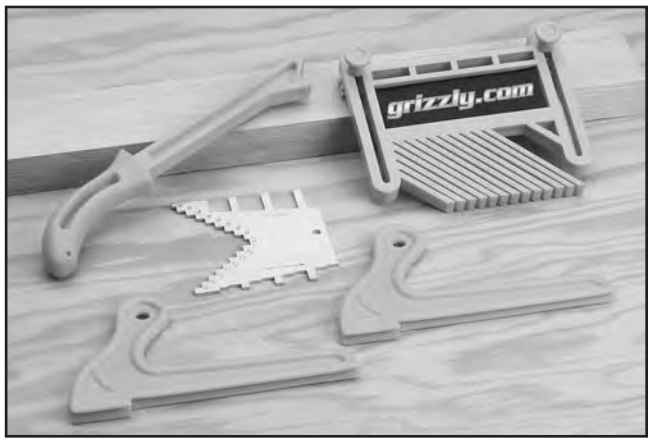

Figure 101. H8029 5 Piece Safety Kit.

T10222—Router Table Attachment
T10223—Sliding Table Attachment
Accessorize your table saw with either of these attachments for ultimate functionality. Fits any table saw with a 27" deep table with some modification.

The cast iron Router Table Attachment with its universal router mount includes an anodized fence for straight routing and a starting pin for contour shaping.

For unmatched cross cutting accuracy, the Sliding Table Attachment with anodized extruded aluminum miter fence offers silky-smooth control. The miter fence even has a built-in workshop for cutting exact multiples.

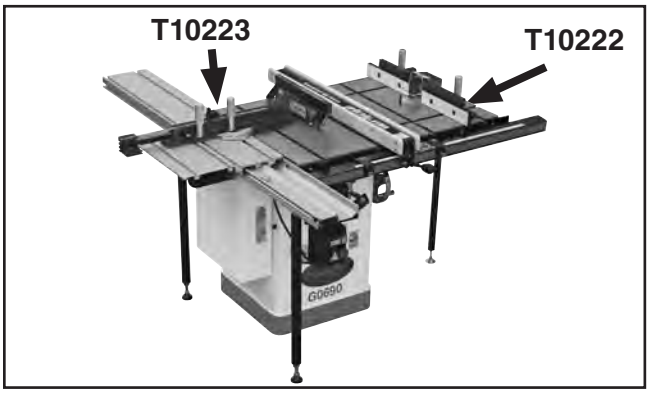

Figure 102. T10222-23 Sliding Table & Router Table Attachments.

T10113—Universal Overarm Blade Guard
Capture the dust that's thrown above the saw by the higher escape velocity of the spinning blade. This Universal Overarm Blade Guard is totally self supporting, so there's no complicated installation process. Just bolt it to your saw base for total stability. It also extends for saws with wide rip capacities and pivots out of the way for complete versatility. Approximate shipping weight: 75 lbs.

Figure 103. T10113 universal overam blade guard.

Call 1-800-523-4777 To Order

T20501—Face Shield Crown Protector 4"
T20502—Face Shield Crown Protector 7"
T20503—Face Shield Window
T20452—"Kirova" Anti-Reflective S. Glasses
T20451—"Kirova" Clear Safety Glasses
H0736—Shop Fox® Safety Glasses
H7194—Bifocal Safety Glasses 1.5
H7195—Bifocal Safety Glasses 2.0
H7196—Bifocal Safety Glasses 2.5

Figure 104. Eye protection assortment.

G5562—SLIPIT® 1 Qt. Gel
G5563—SLIPIT® 12 oz Spray
G2871—Boeshield® T-9 12 oz Spray
G2870—Boeshield® T-9 4 oz Spray
H3788—G96® Gun Treatment 12 oz Spray
H3789—G96® Gun Treatment 4.5 oz Spray

Figure 105. Recommended products for protecting your cast iron table top.

Call 1-800-523-4777 To Order

H1049—Clear Flexible Hose 2½" x 10'
H1052—Clear Flexible Hose 4" x 10'
G3123—Black Flexible Hose 2½" x 10'
G1536—Black Flexible Hose 4" x 10'
G3124—Wire Hose Clamp 2½"
G2974—Wire Hose Clamp 4"
G3119—Dust Collection Adapter 2½" x 4"
G1843—Plastic Blast Gate 4"
G4679—Anti-Static Grounding Kit
G7938—Shop Vacuum Adapter 2½" x 2½"

We've hand picked a selection of dust collection components commonly needed to connect the Model G0661 to an existing dust collection system.

Figure 106. Dust collection accessories.

H9587—Table Saw Fundamentals

The table saw is the single tool that turns the hobbyist into a real woodworker, capable of handling a range of challenging jobs. With expert advice, color photos, drawings, and exploded diagrams, Popular Mechanics reveals exactly what this all-important piece of equipment can do. This invaluable and instructive manual covers it all. 192 pages.

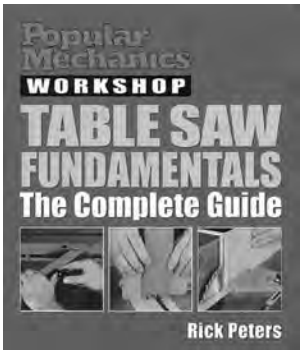

Figure 107. Model H9587 Table Saw Fundamentals guide book.

G0638—10HP 3-Ph Cyclone Dust Collector
Our largest Dust Collector features a whopping 4029 CFM capacity and can handle any large duct system with a static pressure loss less than 16.8" of water. Dual collection drums minimize the down time necessary for emptying dust and chips and the noise reducing exhaust manifold keeps the noise level below 87 dB. The ramped air intake is so efficient, there is very little fine dust that makes it to the plastic filter bags and with a 99.9% filter efficiency rating, essentially no dust escapes. The steel stand is included.

Figure 108. G0638 10HP Cyclone Dust Collector.

G7581—Superbar™
G7582—Master Plate
The miter slot mounted Superbar™ will align, tune and calibrate your tablesaw to within ±.001 in just minutes. Replace your tablesaw blade when calibrating the double disk ground Master Plate for a precision measurement, with no runout!

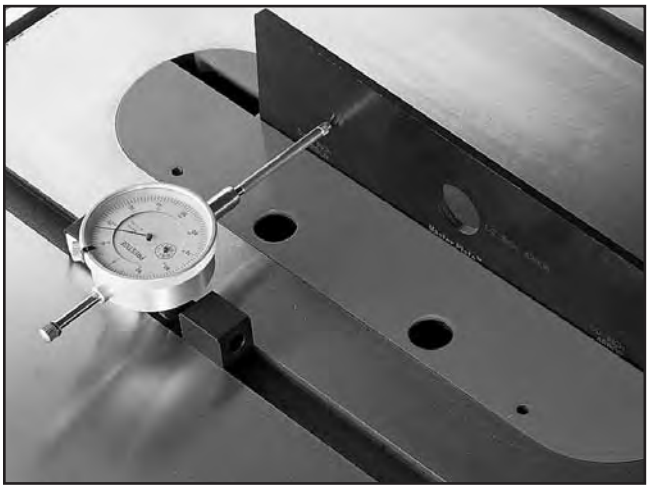

Figure 109. Superbar™ and Master Plate.

Call 1-800-523-4777 To Order

SECTION 7: MAINTENANCE

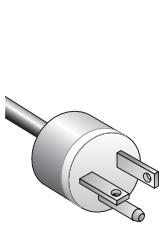

WARNING

Always disconnect power to the machine before performing maintenance. Failure to do this may result in serious personal injury.

Schedule

For optimum performance from your machine, follow this maintenance schedule and refer to any specific instructions given in this section.

Daily Check:
- Inspect blades for damage or wear.
- Check for loose mounting bolts/arbor nut.
- Check cords, plugs, and switch for damage.
- Any other condition that could hamper the safe operation of this machine.
- Vacuum dust buildup from inside the cabinet and off of the motor after use.
- Wipe the table clean after every use—this ensures moisture from wood dust does not remain on bare metal surfaces.
- Verify that the anti-kickback pawls return to their bottom-most position after pivoting.
- Verify that the spreader/riving knife is aligned with the blade (refer to **Page 73** to perform a quick check.)

Weekly Maintenance:
- Wipe down the table surface and grooves with a lubricant and rust preventive such as SLIPIT®.
- Clean the pitch and resin from the saw blade with a cleaner like OxiSolv® Blade & Bit Cleaner.

Monthly Check:
- Check/tighten the belt tension (**Page 80**).
- Check lubrication of trunnion slides, worm gear, bevel gears, and mounting plate teeth, elevation leadscrew and rails (**Page 66**).

Cleaning

Cleaning the Model G0651/G0652 is relatively easy. Vacuum excess wood chips and sawdust, and wipe off the remaining dust with a dry cloth. If any resin has built up, use a resin dissolving cleaner to remove it. Treat all unpainted cast iron and steel with a non-staining lubricant after cleaning.

Occasionally it will become necessary to clean the internal parts with more than a vacuum. To do this, remove the table top and clean the internal parts with resin/pitch dissolver or mineral spirits and a stiff wire brush or steel wool. DO NOT USE WATER—WATER WILL CAUSE CAST IRON TO RUST.

Make sure the internal workings are dry before using the saw again, so that wood dust will not accumulate. If any essential lubrication is removed during cleaning, re-lubricate those areas.

Unpainted Cast Iron

Protect the unpainted cast iron surfaces on the table by wiping the table clean after every use—this ensures moisture from wood dust does not remain on bare metal surfaces.

Keep tables rust-free with regular applications of products like G96® Gun Treatment, SLIPIT®, or Boeshield® T-9 (see **Section 5: Accessories** on **Page 63** for more details).

Lubrication

It is essential to clean components before lubricating them because dust and chips build up on lubricated components and make them hard to move. Simply adding more grease to them will not yield smooth moving components.

Clean the components in this section with an oil/grease solvent cleaner, such as shown on **Page 23** of this manual.

If you thoroughly clean the components in this section before lubricating them, the result will be silky smooth movement when turning the handwheels, which will result in much higher enjoyment on your part and a longer lasting machine!

The following are the main components that need to be lubricated:

- Trunnion Slides
- Worm Gear, Bevel Gears, and Mounting Plate Teeth
- Elevation Leadscrew and Rails

DISCONNECT POWER BEFORE PERFORMING LUBRICATION! After lubrication is complete, recalibrate the digital readout (refer to procedure on **Page 79**) before operating the table saw.

Trunnion Slides

Check every month. Clean out the trunnion slides with mineral spirits and a rag, and brush a dollop of lithium grease into each groove. Move the blade tilt back-and-forth to spread the grease (see **Figure 110**).

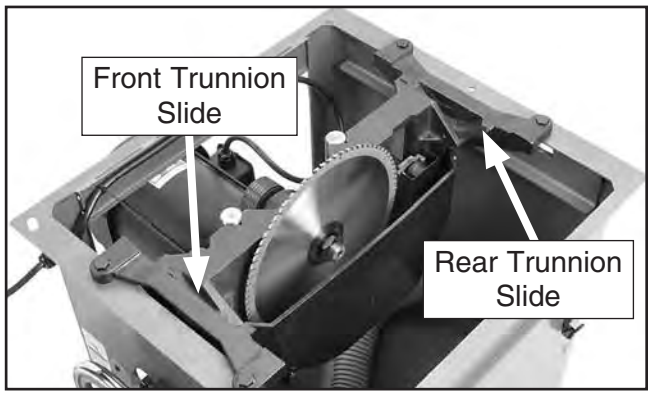

Figure 110. Example of trunnion slides.

Worm Gear, Bevel Gears, and Mounting Plate Teeth

Check every month. Use a wire brush and mineral spirits to clean away any built up grime and debris from the worm gear, bevel gear, and mounting plate teeth (**Figure 111**).

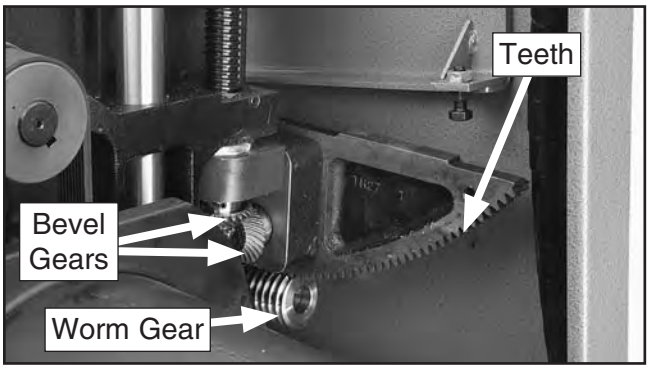

Figure 111. Worm gear, bevel gears, and mounting plate teeth.

Use a brush to apply a thin coat of lithium grease to the worm gear, bevel gears, and mounting plate teeth.

Elevation Leadscrew and Rails

Check every month. Clean away any built up grime and debris with a wire brush and mineral spirits from the elevation rails (see **Figure 112**).

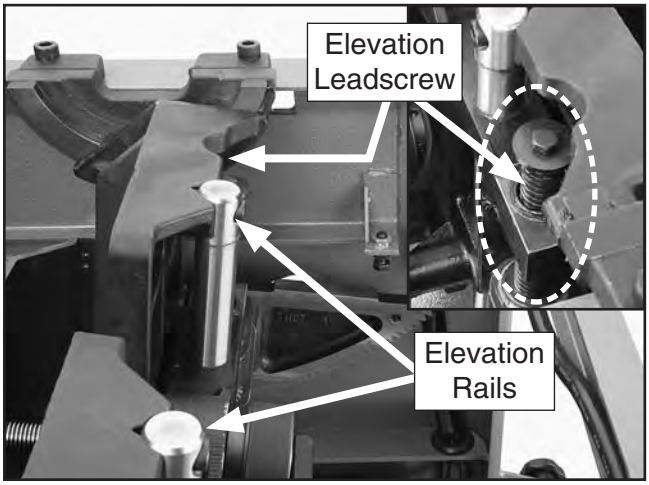

Figure 112. Bevel gears, elevation leadscrew and rails

Use a brush to apply lithium grease to the elevation leadscrew. Brush a small amount of grease (or oil) onto the elevation rails and wipe them down with a rag. The goal is to spread a thin film over the rails to help protect them from rust.

SECTION 8: SERVICE

Review the troubleshooting and procedures in this section to fix or adjust your machine if a problem develops. If you need replacement parts or you are unsure of your repair skills, then feel free to call our Technical Support at (570) 546-9663.

Troubleshooting

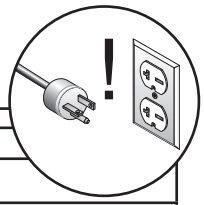

Symptom	Possible Cause	Possible Solution
Motor does not start.	1. Switch disabling lock installed. 2. Stop button not reset. 3. Motor connection wired incorrectly. 4. Contactor not energized/has poor contacts. 5. Break or short in wiring; or loose connections. 6. Power supply switched off/has incorrect voltage. 7. Thermal overload relay in mag switch tripped. 8. Start capacitor has blown (G0651 only). 9. Centrifugal switch at fault (G0651 only). 10. Machine wired out of phase (G0652 only). 11. Phase converter (if used) wild wire connected wrong (G0652 only).	1. Remove switch disabling lock. 2. Lift stop paddle and fully depress stop button with your finger. 3. Wire motor correctly (refer to inside junction box cover or manual). 4. Test all legs for power, test field coil and replace if at fault. 5. Trace/replace broken or corroded wires; fix loose connections. 6. Switch power supply on/verify voltage. 7. Allow relay/motor to cool. If necessary, press reset button inside switch. 8. Test/replace if at fault. 9. Adjust/replace centrifugal switch. 10. Swap two power incoming power leads (**Page 18**). 11. Connect wild wire to line without transformer or sensitive electronics.
Machine operates in reverse.	1. Power connections wired out of phase (G0652 only).	1. Swap two incoming power leads (**Page 18**).
Machine has excessive vibration or noise.	1. Slight blade wobble. 2. Arbor nut is loose/obstructed by debris. 3. Arbor pulley loose. 4. Loose tilt handwheel. 5. Casting at fault. 6. Motor fan rubbing on fan cover. 7. Motor mounting loose. 8. Belt worn or damaged. 9. Belt(s) slapping cover. 10. Pulley loose or not in alignment; shaft bent. 11. Machine incorrectly mounted on floor. 12. Arbor bearings at fault. 13. Motor bearings worn or damaged.	1. Use a blade stabilizer. 2. Remove and clean, then tighten arbor nut. 3. Retighten/replace arbor pulley with shaft and thread locking liquid. 4. Tighten the tilt handwheel lock knob. 5. Trunnion/geared bearing housing is loose or cracked; tighten or replace. 6. Fix/replace fan cover; replace loose or damaged fan. 7. Tighten mounting bolts/nuts; use thread locking fluid. 8. Replace Flat-belt (refer to **Page 81**). 9. Tighten belt(s). 10. Replace worn pulley, key, and shaft, and realign. 11. Level/shim base; tighten/adjust mounting hardware or feet. 12. Replace arbor housing bearings; replace arbor. 13. Replace motor bearings or replace motor.

Symptom	Possible Cause	Possible Solution
Handwheel binds or is difficult to move.	1. Lock knob is engaged. 2. Handwheel shaft pins are wedged. 3. Handwheel is inserted too far. 4. Too much engagement between the worm gear & trunnion	1. Loosen lock knob. 2. Remove handwheel and adjust shaft pins. 3. Remove handwheel and adjust key. 4. Adjust worm gear engagement.
Blade does not reach 90 degrees.	1. Pointer or scale calibrated incorrectly. 2. 90 Degree stop bolt is out of adjustment.	1. Calibrate pointer/scale at true 90 degrees (**Page 69**). 2. Adjust 90 degree stop bolt (**Page 69**).
Blade does not reach 45 degrees.	1. Pointer or scale calibrated incorrectly. 2. 45 Degree stop bolt is out of adjustment. 3. Sawdust is built up in front trunnion.	1. Calibrate pointer/scale at true 45 degrees (**Page 69**). 2. Adjust 45 degree stop bolt (**Page 70**). 3. Check for sawdust in trunnions, clean and re-lubricate as necessary.
Blade too close to insert.	1. Blade position on arbor is incorrect. 2. Table mounting position is not centered.	1. Verify that blade arbor washers are correct and in the required position. 2. Loosen table mounting bolts, adjust table position, then realign the blade.
Blade will not go beneath table surface.	1. Handwheel shaft pins are wedged. 2. Roll pin/setscrew in worm gear contacting geared trunnion. 3. Handwheel key is inserted too far.	1. Remove handwheel and adjust shaft pins. 2. Tighten roll pins and setscrews in the worm gear. 3. Remove handwheel and adjust key.
Blade will not move up or down.	1. Set screw on worm gear is loose/missing. 2. Handwheel shaft key is missing.	1. Tighten or replace set screw. 2. Replace key.
Workpiece burns or binds when feeding.	1. Riving knife not correctly aligned with blade. 2. Spreader not correctly aligned with blade. 3. Fence not parallel with blade (pressure at blade backside). 4. Blade is warped or damaged. 5. Too many teeth on blade for cutting type	1. Adjust riving knife into alignment with blade (**Page 74**). 2. Adjust spreader into alignment with blade (**Page 74**). 3. Adjust fence parallel with blade (**Page 76**). 4. Replace blade (**Page 37**). 5. Change blade to one with fewer teeth
Too much sawdust blown back toward operator.	1. Blade guard has been removed. 2. Too many air leaks in cabinet for proper dust collection. 3. Dust collection system clogged; too weak. 4. Fence not parallel with blade (pressure at blade backside). 5. Miter slot/fence not parallel with blade at 90° and 45°.	1. Re-install blade guard for maximum safety and dust control. 2. Seal leaks in cabinet or around dust chute. 3. Remove clog; revise ducting layout for improved suction. 4. Adjust fence parallel with blade (**Page 76**). 5. Adjust table/trunnions so miter slot is parallel with blade at 90° and 45° (**Page 71**).

Blade Tilt Stops

The table saw features stop bolts that stop the blade exactly at 45° and 90° during blade adjustments. The stops have been set at the factory and should require no adjustments, unless you notice that your cuts are not accurate.

Note: *The tilt scale reads "0" when the blade is 90° to the table.*

Tools Needed	Qty
90° Square	1
Combo Square	1
Wrench 12 & 13mm	1
Hex Wrench 2.5mm	1

Setting 90° Stop Bolt

1. DISCONNECT SAW FROM POWER!

2. Raise the blade as high as it will go, then tilt it toward 0° until it stops and cannot be tilted any more.

3. Place a 90° square against the table and blade so it contacts the blade evenly from bottom to top, as shown in **Figure 113**. Make sure a blade tooth does not obstruct the placement of the square.

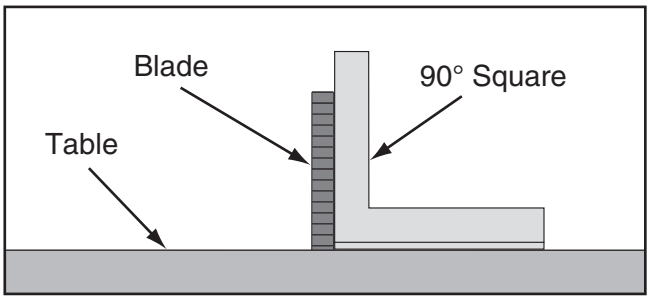

Figure 113. Checking blade at 90°.

—If the blade is 90° to the table, then adjustments do not need to be made. Make sure the tilt indicator arrow shown in **Figure 114** points to the 0° mark on the scale. If it does not, remove the blade height lock knob, loosen the blade height handwheel set screw and remove the handwheel.

Adjust the indicator position by loosening the Phillips head screw, moving the indicator, then tightening the screw and reinstalling the handwheel. Proceed to ***Setting 45° Stop Bolt*** on **Page 70**.

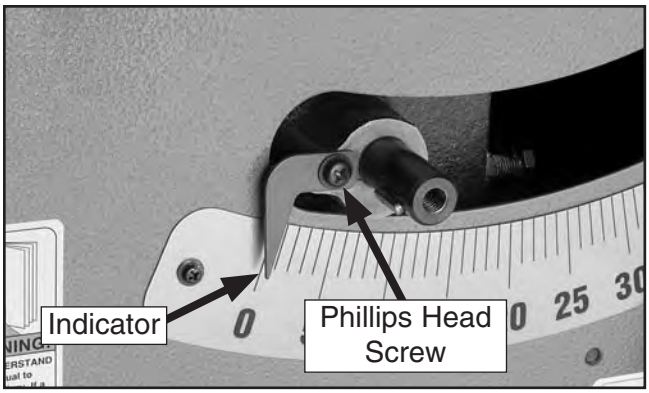

Figure 114. Tilt indicator arrow.

—If the blade is not 90° to the table, you will need to adjust the 90° stop screw. Proceed to the next step.

4. Tilt the blade to about 20°, so there is room for the stop bolt to move.

5. Open the motor access cover, loosen the jam nut shown in **Figures 115 & 116**, adjust the stop bolt up or down according to how far off the blade was from 90°, then repeat **Step 3** until the blade stops at 90°.

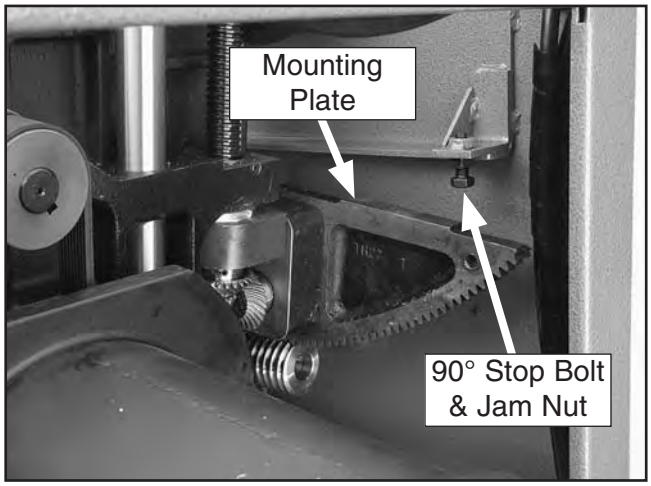

Figure 115. 90° stop bolt and jam nut.

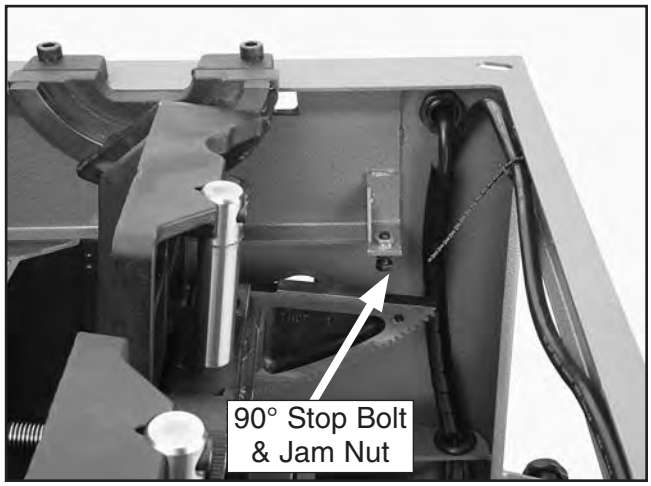

Figure 116. 90° stop bolt and jam nut (table removed for clarity).

6. Tighten the jam nut, then close the motor cover.

Setting 45° Stop Bolt

1. DISCONNECT SAW FROM POWER!

2. Raise the blade as high as it will go, then tilt it towards 45° until it stops and cannot be tilted any more.

3. Place a 45° square against the table and blade so it contacts the blade evenly from bottom to top, as shown in **Figure 117**. Make sure a blade tooth does not obstruct the placement of the square.

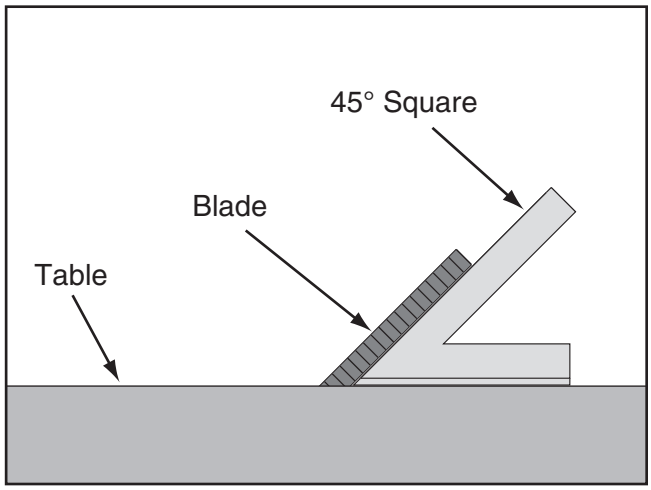

Figure 117. Checking blade at 45°.

—If the blade is 45° to the table, then adjustments do not need to be made.

—If the blade is not 45° to the table, you will need to adjust the 45° stop screw. Proceed to the next step.

4. Tilt the blade to 20°, so there is room for the stop bolt to move.

5. Loosen the jam nut on the 45° stop bolt (see **Figure 118**) then adjust the stop bolt in or out according to how far off the blade was from 45°.

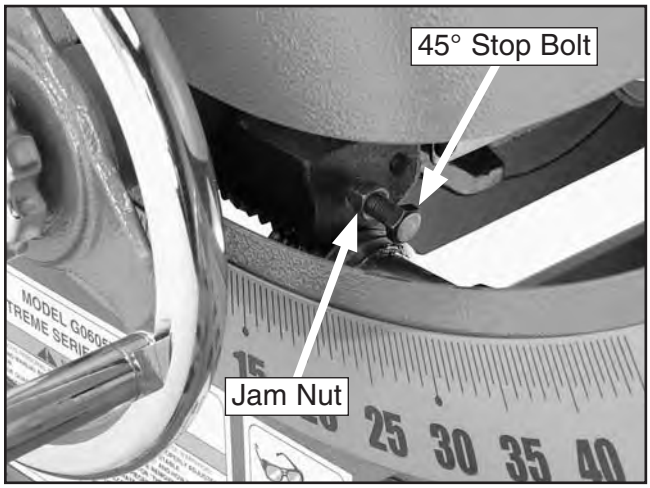

Figure 118. 45° stop bolt and jam nut.

6. Continue adjusting the stop bolt until it contacts the cabinet when the blade is at 45°, then tighten the jam nut.

7. Reconnect the power, then recalibrate the digital readout (refer to procedure on **Page 79**) before operating the table saw.

Miter Slot to Blade Parallelism

Tools Needed	Qty
Adjustable Square	1
Metal Shim Stock	As Needed
Marker	1

Your table saw will give the best results if the miter slot is parallel with the blade. If these components are not exactly parallel with each other, your cuts and your finished work will be lower in quality, but more importantly, the risk of kickback will be increased.

To adjust the blade parallel to the miter slot:

1. DISCONNECT SAW FROM POWER!

2. Tilt the blade to 90°.

3. Measure from the miter slot to a carbide tip on the blade, as shown in **Figure 119.**

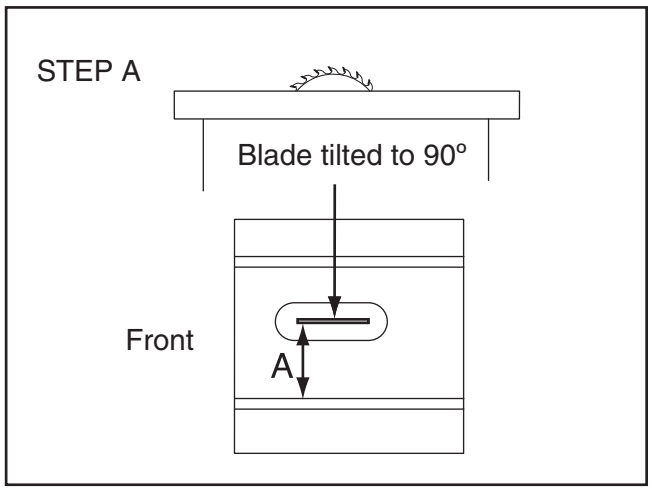

Figure 119. Measuring distance from miter slot to carbide tip of blade.

4. Mark the carbide tip with a marker where you made this measurement.

⚠CAUTION

The saw blade is dangerously sharp. Use extra care or wear gloves when handling the blade or working near it.

5. Rotate the marked blade tip to the other end of the table insert.

6. Compare the distance from the marked blade tip to the miter slot, as shown in **Figure 120**.

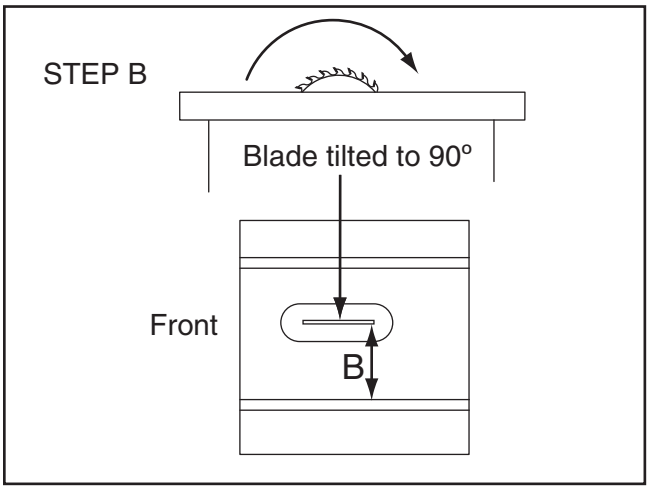

Figure 120. Measuring distance from miter slot to carbide tip on opposite side of table insert.

—If the distance between the blade tip and the miter slot is not the same on both sides of the table insert, the table will need to be adjusted. Proceed to **Step 7**.

—If the blade tip measurement is the same on both sides, go to **Step 8**.

7. To adjust the table, loosen the three bolts in the table mounting locations (see **Figure 121**) and lightly tap the table in the direction needed to square the table to the blade. Repeat **Steps 2-6** until the blade and miter slot are parallel. Do not forget to tighten the table mounting bolts when finished.

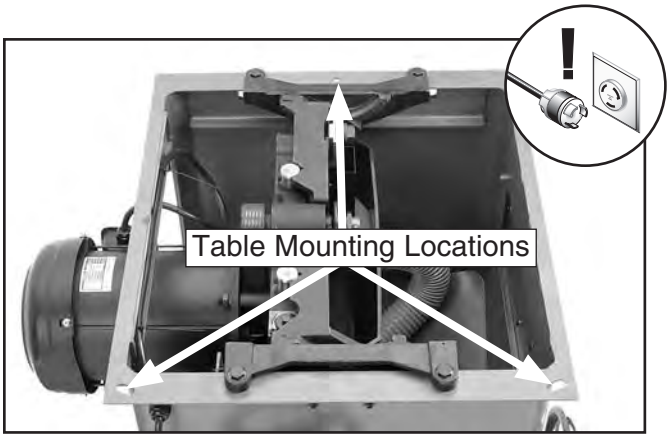

Figure 121. Table mounting bolt holes (table top removed for clarity).

8. Tilt the blade to 45° and repeat **Steps 3-6**.

—If the blade is still parallel with the miter slot, continue onto the **Blade Alignment** procedure.

—If the blade was parallel with the miter slot at 90° but not at 45°, one end of the table will need to be shimmed higher with metal shim stock.

9. Loosen the three table mounting bolts.

10. Refer to **Figures 122 and 123** for shim placement. If the distance of A is shorter than B, shim(s) will need to be placed under corners #1 and #2. If the distance of B is shorter than A, shim(s) will need to be placed under corner #3. Very thin shim stock works well.

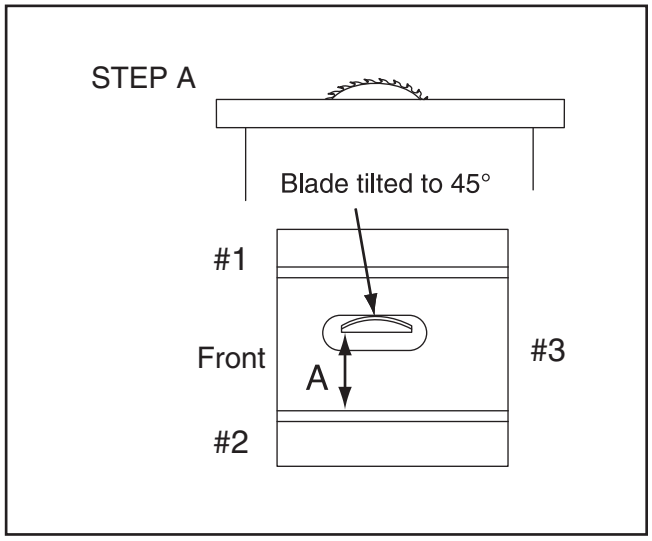

Figure 122. Shim procedure diagram A.

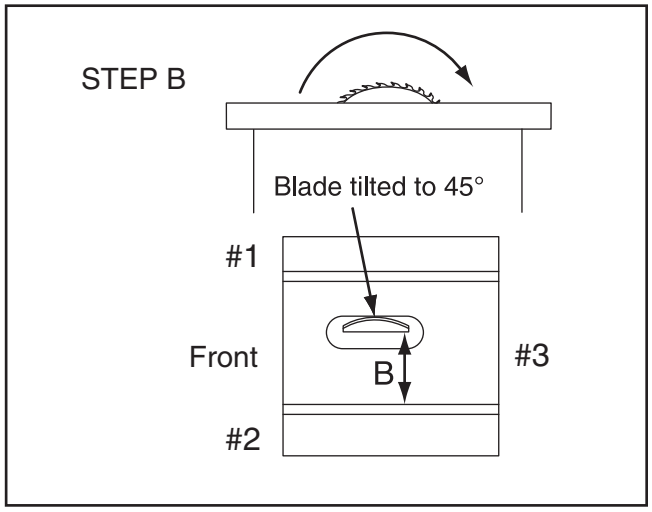

Figure 123. Shim procedure diagram B.

11. Tighten one bolt a small amount and then move on to each of the others, tightening each down the same amount. Continue to rotate through the bolts, tightening them a little each time until they are all secure.

12. Now recheck the blade to miter slot at 90° and 45° by repeating **Steps 3-6**.

—If the distance of A and B are equal, continue to **Step 13**, then go to **Blade Alignment**.

—If the distances are still off, repeat **Steps 9-11**.

13. Once the miter slot is adjusted to the blade, recheck all measurements and be sure the table mounting bolts are secure. Also, if you remove the table in the future, note the shim placements and reassemble them exactly how they came apart.

14. Reconnect the power, then recalibrate the digital readout (refer to procedure on **Page 79**) before operating the saw.

Blade Alignment

If the blade contacts the table insert when raised or tilted, the blade must be aligned.

Tools Needed	**Qty**
Wrench 14mm	1

To adjust the blade alignment by moving the table:

1. DISCONNECT SAW FROM POWER!

2. Loosen the three table mounting bolts (**Page 71, Figure 121**) and adjust the table until the blade does not contact the insert. Tighten all the mounting bolts.

3. Make sure the blade does not contact the table insert when raised or tilted. Recheck parallelism of the blade to the miter slot (see **Page 71**). Adjust as necessary until the blade does not touch the insert.

Spreader or Riving Knife Alignment

Checking Alignment

The blade guard spreader and riving knife must be aligned with the blade when installed. If the spreader/riving knife is not aligned with the blade, then the workpiece will before forced sideways during the cut, which will increase the risk of kick-back.

Tools Needed	Qty
Straightedge	1

To check the spreader/riving knife alignment:

1. DISCONNECT SAW FROM POWER!

2. Raise the saw blade to the maximum height so you have easy working access.

3. Check to make sure the blade is 90° to the table. Follow "Setting 90° Stop Bolt" instructions on **Page 69**.

4. Place the straightedge against the top and bottom of blade and spreader/riving knife, as shown in **Figure 124**. The spreader/riving knife should be be parallel with the blade along its length at both positions and should be in the "Alignment Zone," as shown in **Figure 125**.

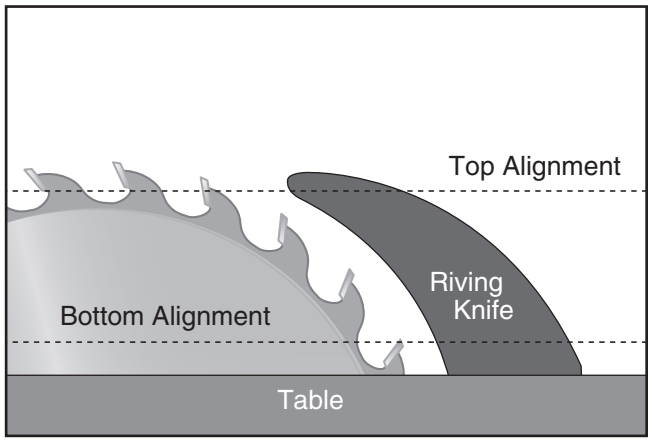

Figure 124. Checking top and bottom riving knife parallelism with blade.

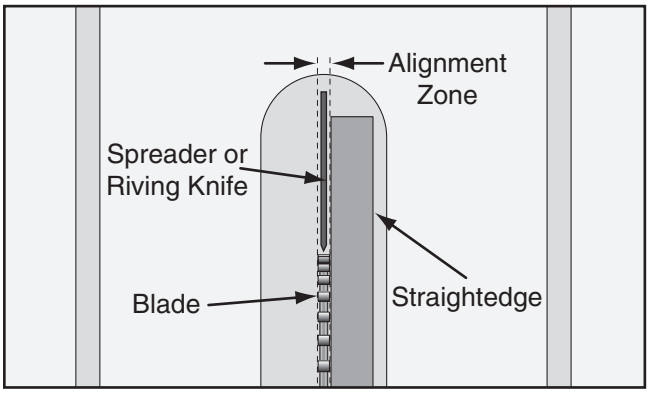

Figure 125. Spreader/riving knife alignment zone.

—If the spreader/riving knife is not parallel with the blade and inside the alignment zone, then it needs to be adjusted. Proceed to **Adjusting Alignment** instructions.

—If the spreader/riving knife is not parallel with the blade at either the top or bottom, it may be bent. Remove the spreader/riving knife and place it on a flat surface and check to see if the spreader/riving knife lays evenly along its length. If the spreader/riving knife does not lay evenly, proceed to **Adjusting Bent Spreader/Riving Knife** on **Page 74**.

Adjusting Alignment

The spreader/riving knife mounts to a block that can be repositioned to correctly align the spreader/riving knife to the blade. The mounting block adjusts by turning the set screws in each corner of the block.

Figure 126 shows the set screws associated with controlling the mounting block position.

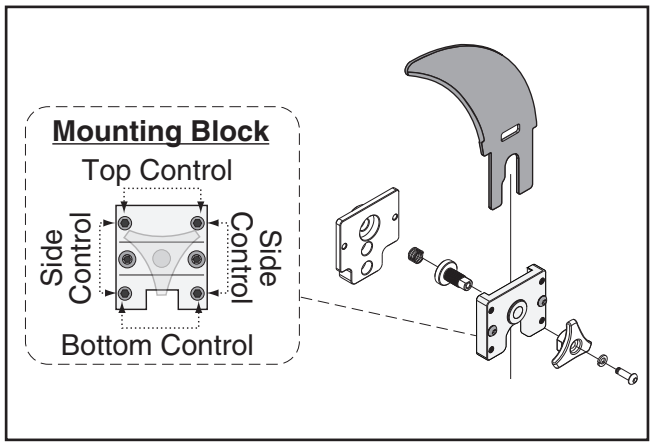

Figure 126. Set screws for adjusting spreader/riving knife position.

Tools Needed	Qty
Hex Wrench 2.5mm	1
Hex Wrench 3mm	1

To adjust the spreader/riving knife position:

1. DISCONNECT SAW FROM POWER!

2. Remove the table insert.

3. Loosen the two button head cap screws on the mounting block, then adjust the set screws on the block to move it in the necessary direction (see "Mounting Block" inset in **Figure 126**).

4. Tighten the lock knob (see **Figure 127**), then re-install the table insert.

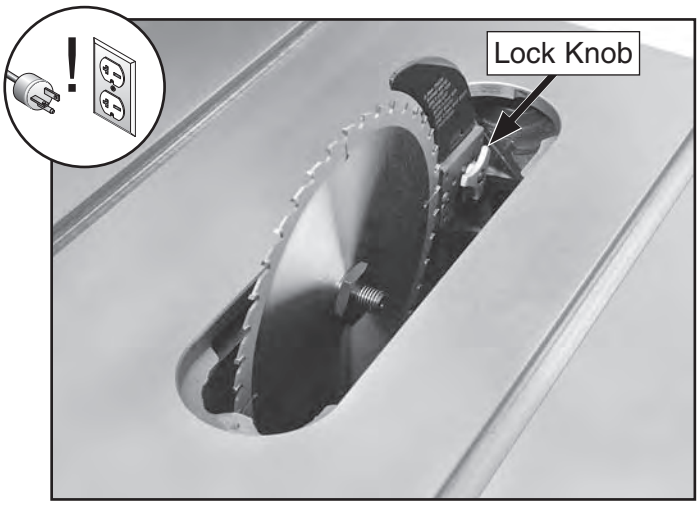

Figure 127. Lock knob location.

5. Follow **Checking Alignment**, **Steps 1–4**, on **Page 73**.

   —If the spreader/riving knife is in the alignment zone, no additional steps are necessary.

   —If the spreader/riving knife is still not in the alignment zone, continue adjusting the set screws on the mounting block as necessary to correctly position the spreader/riving knife.

6. Tighten the two button head cap screws on the mounting block to secure the spreader/riving knife adjustment.

Adjusting Bent Spreader/Riving Knife

1. DISCONNECT SAW FROM POWER!

2. Bend the spreader or riving knife by hand while installed, then follow **Steps 1–4** in **Checking Alignment** on **Page 73** to determine if it is parallel with the blade and inside the "Alignment Zone."

   —If this does not work, remove it to straighten.

   —If you cannot straighten it properly, replace it.

Fence Adjustments

There are four main adjustments for the fence: square, height, parallelism, and clamping pressure. Keep in mind that these adjustments are interconnected and some trial-and-error may be needed to achieve satisfactory results.

Tools Needed	Qty
Hex Wrench 4mm	1
Hex Wrench 6mm	1
Machinist's Square	1
Felt-Tipped Marker	1

Square and Height

The fence face must be square to the table in order to produce square cuts. Also, the fence should be adjusted high enough off the table that it does not drag across the surface.

To check/adjust the fence height and squareness to the table:

1. DISCONNECT SAW FROM POWER!

2. Place a square on the table against the face of the fence (**Figure 128**) to check if the fence is square to the table.

   —If the fence is not square to the table, proceed to **Step 3**.

   —If the fence is square to the table, skip ahead to **Step 4**.

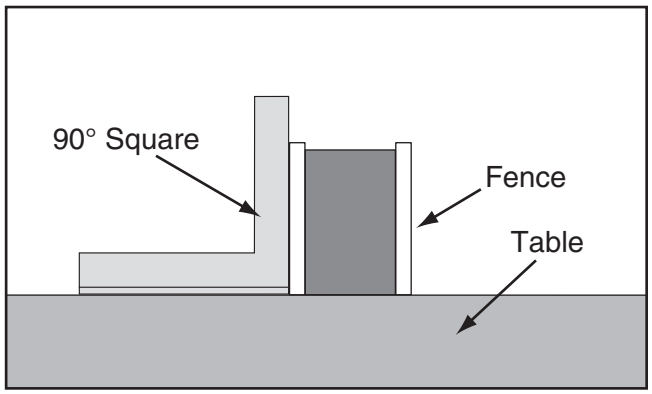

Figure 128. Checking if fence is square to table.

3. Adjust the set screws (**Figure 129**) on top of the fence bracket to ensure the fence face is 90° to the table.

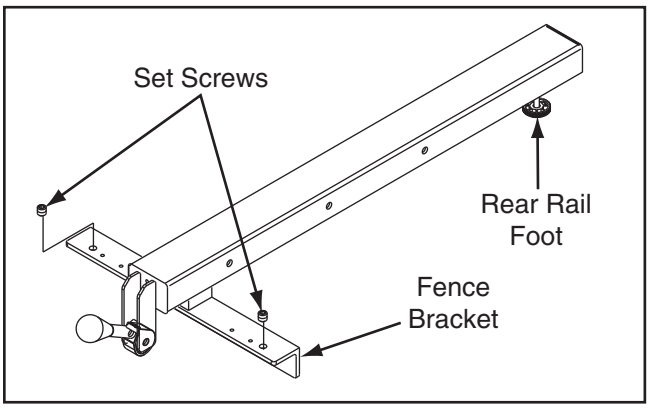

Figure 129. Fence components used to adjust fence height and squareness to table.

4. Look at the gap between the fence and the table top.

   —If the gap is approximately 1/16" and even from the front of the table to the back (see **Figure 130**), then no additional adjustments are necessary. Proceed to **Clamping Pressure and Parallelism**.

   —If the gap is uneven, if the fence height is more than 1/8", or if the fence touches the table, then continue with **Step 5**.

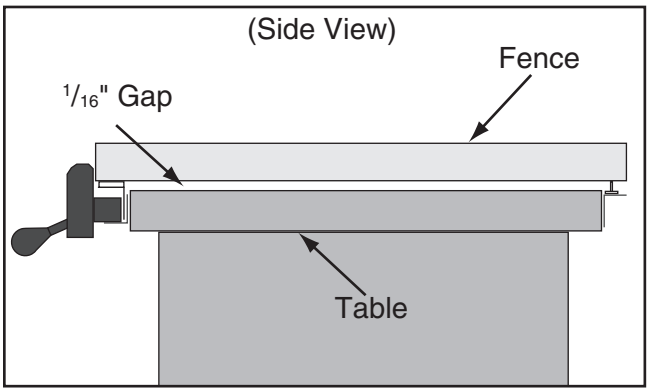

Figure 130. Gap between fence and table approximately 1/16" from from to back.

5. Adjust the fence height with the rear rail foot until the gap between the table and the fence is approximately 1/16" and even from the front of the table to the back.

Note: *If the front end of the fence needs to be adjusted up or down, use the set screws from* ***Figure 129****; however, turn them in even increments and recheck the squareness afterwards.*

Clamping Pressure and Parallelism

The fence clamping mechanism adjusts the clamping pressure to hold the fence securely and to position the fence parallel with the blade.

To verify fence parallelism:

1. Slide the fence along the rail.

—If the fence drags across the table, then loosen the hex nut on the foot at the rear of the fence and adjust the foot to raise the fence off of the table so the gap is approximately 1⁄16" and even from the front of the table to the back (see **Figure 130** on **Page 75**). Then, tighten the hex nut on the foot.

2. Slide the fence up against the right hand edge of the miter slot, lock it in place, then raise the blade above the insert. Examine how the fence lines up with the miter slot and the blade, as shown in **Figure 131**.

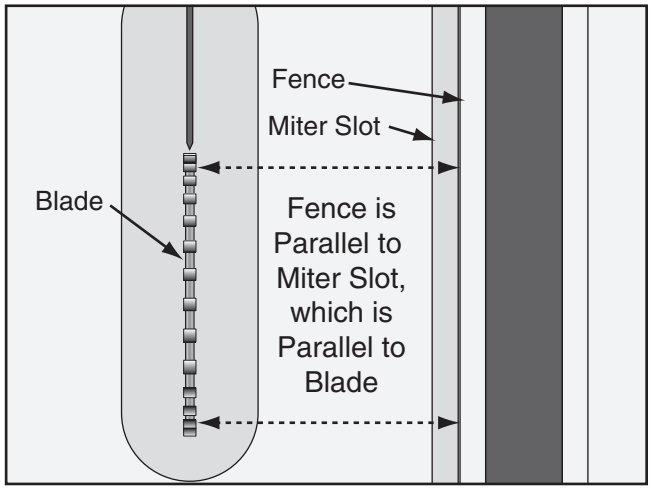

Figure 131. Checking fence parallelism with blade.

—If the fence/miter slot are parallel with the blade, as shown in **Figure 131**, no further adjustments need to be made.

—If the fence is not parallel with the blade/miter slot, then you MUST adjust the fence, as described in "To adjust the fence clamping pressure and parallelism to the blade" below, so that it is parallel with the blade.

—If the miter slot is not parallel with the blade, you must follow the procedures described in **Miter Slot to Blade Parallelism** on **Page 71**.

To adjust the fence clamping pressure and parallelism to the blade:

1. DISCONNECT SAW FROM POWER!

2. Remove the fence and equally adjust the set screws shown in **Figure 132** as necessary, then re-install the fence and check the clamping pressure. Readjust as necessary until the fence will not move as pressure is applied against it.

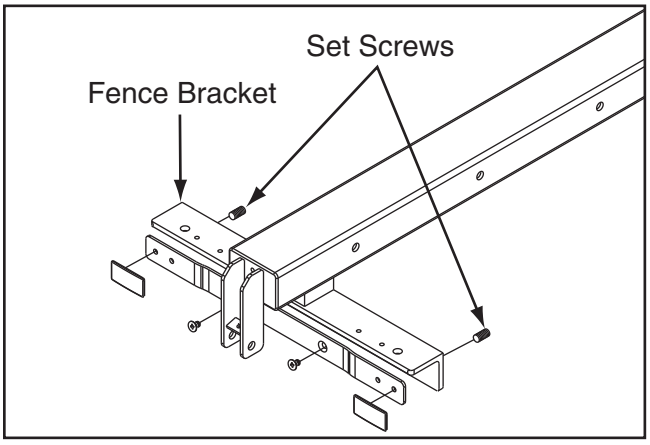

Figure 132. Location of set screws used to adjust fence parallelism and clamping pressure.

3. Mount the fence on the rail again, move it approximately 4" away from the blade, and lock it in place.

4. Measure the distance between the fence and the front of the blade, then mark the tooth that you measured from with a felt-tipped marker.

5. Rotate the blade 180° and recheck the distance between the fence and the blade tooth you marked in **Step 4** to ensure they are parallel (see **Figure 131** on **Page 76**).

6. Use trial-and-error to adjust the set screws so the fence is parallel with the blade and the clamping pressure is sufficient.

Offsetting Fence

Some woodworkers prefer to offset the rear of the fence 1/64" from the blade, as shown in **Figure 133**.

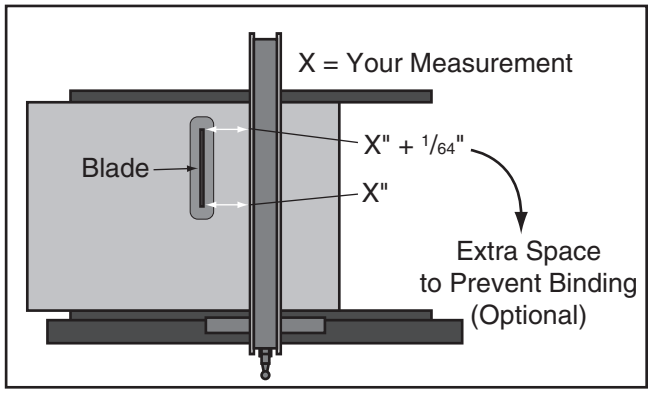

Figure 133. Adjusting fence with a 1/64" offset.

The reason for this wider gap at the back side of the blade is to help prevent the chance of kickback and the blade burning the workpiece because it may be inconsistent. However, the trade-off is less accurate cuts, and if the fence is placed on the other side of blade for other table saw operations, the potential of workpiece burning and kickback can be increased. Whenever using a fence, make sure that if an offset has been adjusted in the fence alignment, you use the fence on the side of the blade where the offset creates the wide gap.

Fence Scale Calibration

The fence scale indicator windows, shown in **Figure 134**, can be calibrated with the fence scale by loosening the two mounting screws and sliding it in the desired direction. The indicator window on the right side is used when the fence is positioned on the right side of the blade. The indicator window on the left side is used when the fence is positioned on the left side of the blade. **IMPORTANT:** Do not use the fence on the left side of the blade if it has been purposely offset, as described in **Offsetting Fence** on this page.

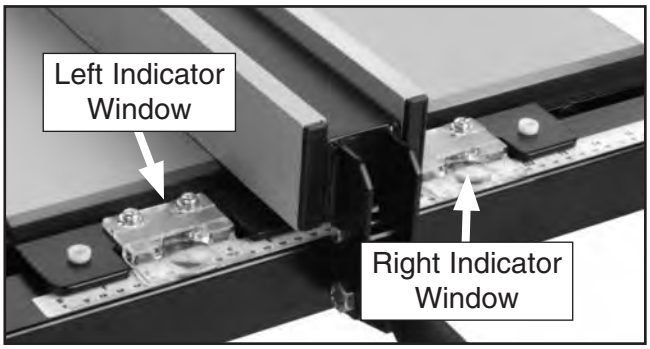

Figure 134. Example of fence indicator windows.

Tools Needed	**Qty**
Phillips Screwdriver	1
Scrap Piece of Wood	1

To calibrate the fence scale indicator windows:

1. Position and lock the fence at 13", as indicated by the scale, then cut your scrap piece of wood.

2. Reposition and lock the fence at 12", as indicated by the scale.

3. Flip your scrap piece of wood over, placing the side that was cut in **Step 2** against the fence, then make your cut.

4. Measure the width of the freshly cut workpiece with a tape measure. The workpiece width should be exactly 12". If it is not, then adjust the indicator window to match the width of the workpiece.

Miter Gauge Adjustments

The miter gauge is equipped with stop screws that allow you to easily adjust the miter gauge from 45° to the left, 90°, and 45° to the right (see **Figure 135**). The stop screws contact the shaft, which moves in or out of the way for adjustments.

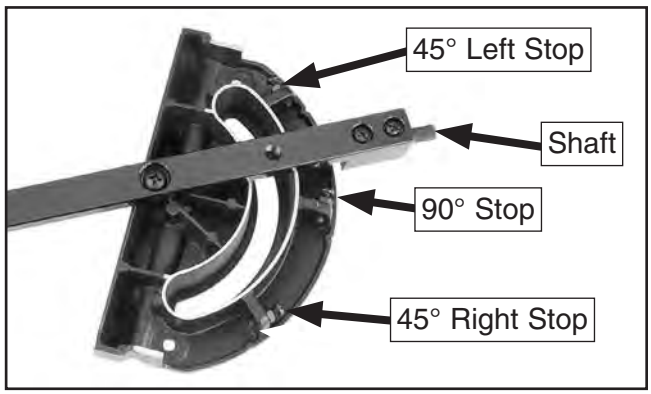

Figure 135. Miter gauge stops.

Tools Needed	Qty
Hex Wrench 2.5mm	1
Phillips Screwdriver	1
Square 90° and 45°	1 Each
Wrench 8mm	1

Checking/Setting 90° Stops

1. DISCONNECT SAW FROM POWER!

2. Slide the miter gauge into the T-slot on the table, then push the sliding shaft all the way into the miter gauge.

3. Adjust the miter gauge so the 90° stop screw rests against the sliding shaft.

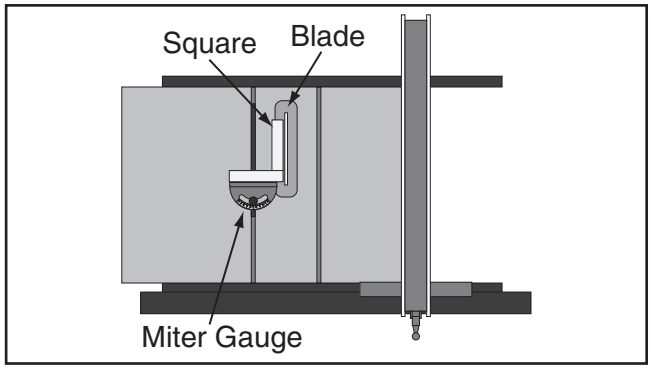

Figure 136. Checking 90° stop on miter gauge.

4. Place the 90° square evenly against the face of the miter gauge and the blade, as shown in **Figure 136**.

   —If the square touches the miter body and the body of the blade (not the teeth) evenly at the same time, then it is square to the blade and the 90° stop is set correctly. No further adjustments are necessary.

   —If the square does not touch the miter body and blade body evenly at the same time, then proceed to **Step 5**.

5. Loosen the hex nut (jam nut) that secures the 90° stop screw and adjust the stop screw until it is seated against the shaft while the square is evenly touching the miter body and the blade body, then tighten the hex nut.

6. Loosen the screw on the front of the miter bar, adjust the pointer to 0°, then tighten the screw.

Checking/Setting 45° Stops

Follow the same process with the 45° stops that you followed with the 90°, except using a 45° square or adjustable square to verify that the miter body is 45° to the blade, as shown in **Figure 137**.

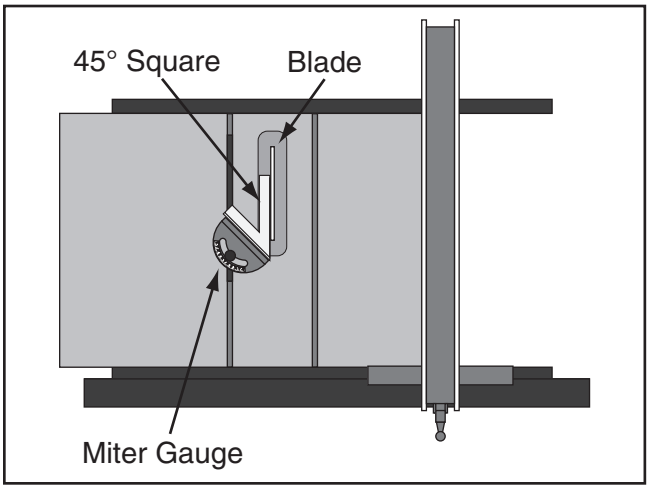

Figure 137. Checking 45° stop on miter gauge.

Table Tilt Handwheel Backlash

The table tilt handwheel should move with very little backlash or slop when the saw is new. Over time the tilt gears may wear, increasing backlash. You can eliminate backlash by adjusting the tilt handwheel gears.

Tools Needed	Qty
Hex Wrench 6mm	1
Wrench 12mm	1
Wrench 13mm	1

To adjust the table tilt gear backlash:

1. DISCONNECT SAW FROM POWER!

2. Turn the table tilt handwheel one way a couple turns, then turn it the other way to feel the backlash.

3. Unscrew the tap screws securing the angle sensor cover, then remove it.

4. Loosen the two cap screws and loosen the jam nut shown in **Figure 138**.

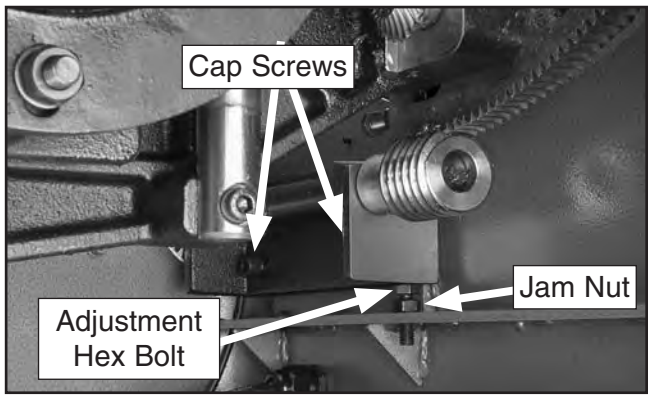

Figure 138. Table tilt handwheel adjustment.

5. While a helper tightens the adjustment hex bolt, turn the tilt handwheel back and forth. Tighten the hex bolt until you no longer feel any wobble or looseness when the handwheel is initially turned. Do not overtighten the gears or they will bind.

6. Tighten the jam nut and the cap screws, reinstall the angle sensor cover, then close the motor access cover.

Digital Readout Calibration

The digital readout displays the current blade angle. Only set the readout after verifying that the 90° and 45° blade tilt stops are correctly positioned.

To calibrate the digital readout:

1. Ensure the power is connected and the 45° and 90° stop bolts are set (see **Blade Tilt Stops** starting on **Page 69**).

2. Move the blade angle to 90° and press the 0° SET button (**Figure 139**) for several seconds until the readout displays 0.00, or move the blade angle to 45° and press the 45° SET button until the readout displays 45.0.

   Note: *If the power is disconnected, the digital display will automatically reset to 0.00. Therefore, when you reconnect power, follow* ***Steps 1–2*** *above.*

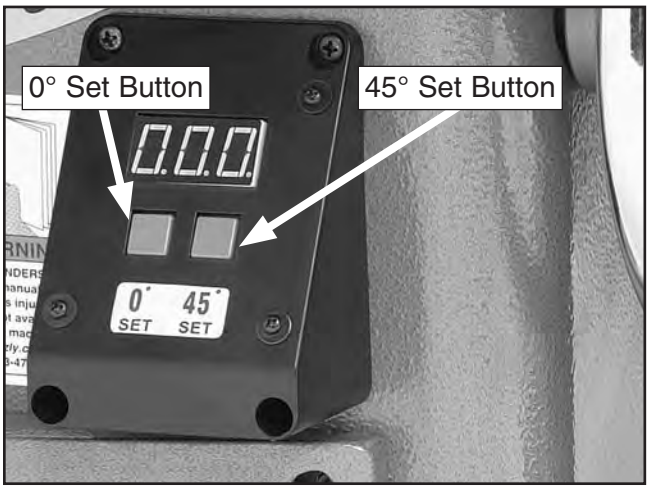

Figure 139. Digital readout.

Belt Tension & Replacement

The belt stretches slightly as the saw is used. Most of the belt stretching will happen during the first 16 hours of use, but it may continue in small increments through continued use.

To ensure optimum power transmission from the motor to the blade, the belt must be in good condition. Replace the belt if it becomes cracked, frayed, or glazed.

Tools Needed	Qty
Arbor Wrenches	2
Wood Block 9" Long 4x4 or 2x4	1
Wrench or Socket 17mm	1

Tensioning Belt

1. DISCONNECT SAW FROM POWER!

2. Use the blade height handwheel to lower the motor all the way down.

3. Loosen the three motor mounting hex nuts (**Figure 140**) two turns, then place the wood block on top of the motor, as shown in **Figure 141**.

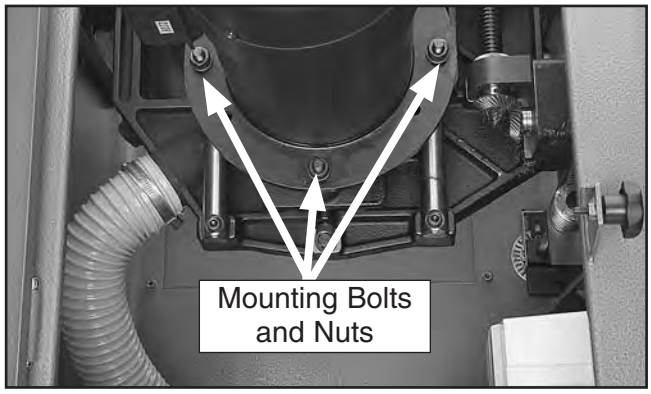

Figure 140. Motor mounting bolts.

4. Use the blade height handwheel to carefully tension the belt by moving the blade up. Do this slowly and take care not to apply too much pressure to the belt.

   Note: *Be careful not to damage the motor, and do not force it up further when it becomes difficult to move the handwheel.*

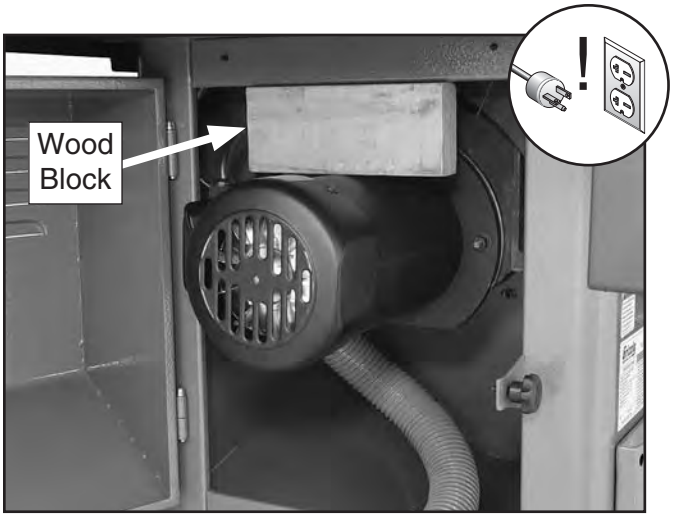

Figure 141. Using wood block to tension belt.

5. Press the belt in the the center to check belt tension. The belt is correctly tensioned when there is approximately ⅛" deflection when it is pushed with moderate pressure, as shown in **Figure 142**.

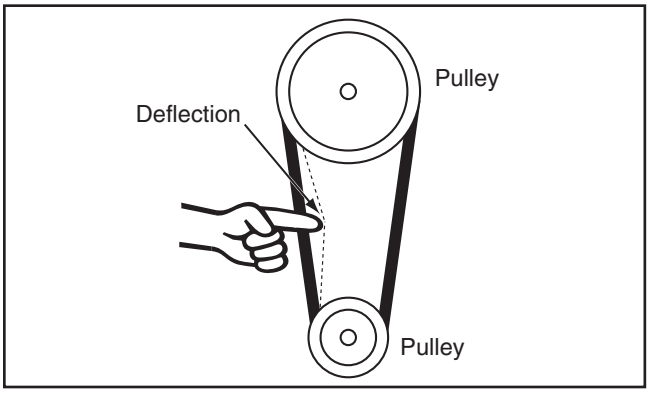

Figure 142. Checking belt deflection.

—If there is more than ⅛" deflection when the belt is pushed with moderate pressure, raise the motor upward.

NOTICE

Do not overtighten the belt. If you do, it could decrease the lifespan of the motor and arbor bearings.

6. Tighten the motor mounting hex nuts, lower the motor, and remove the wood block.

7. Close the motor cover.

Replacing Belt

1. DISCONNECT SAW FROM POWER!

2. Raise the motor all the way up, tilt it to 0°, and open the motor cover.

3. Loosen the three motor mounting hex nuts (**Figure 140**) two turns, and place the 4x4 block between the cabinet and bottom of the motor, as shown in **Figure 143**.

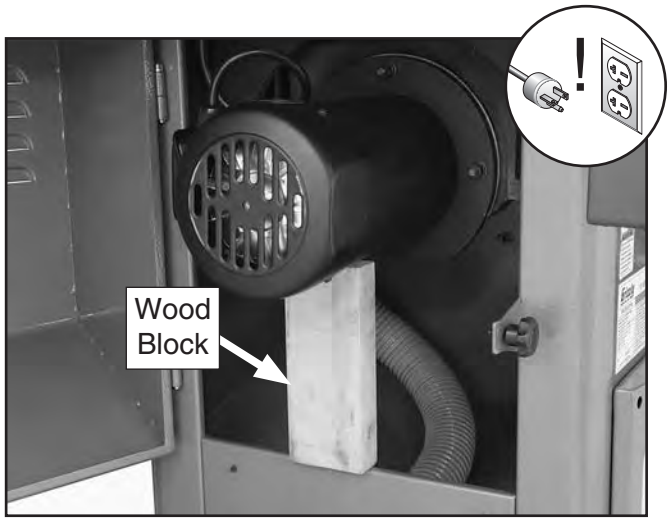

Figure 143. Motor resting on wood block.

4. Lower the arbor assembly until the motor rests on the wood block, as shown in **Figure 143**, then turn the handwheel an additional turn in the same direction to reduce tension on the belt.

   Note: *Be careful not to damage the motor, and do not force the arbor down farther when it becomes difficult to move the handwheel.*

5. Tighten the motor mounting nuts to hold the motor in place.

6. Raise the motor all the way up and remove the wood block.

7. Roll the belt off of the upper and lower pulleys, as shown in **Figure 144**. Be careful not to pinch your fingers.

   Note: *To make belt removal easier, turn the belt sideways and slide it down and past the back of the motor pulley.*

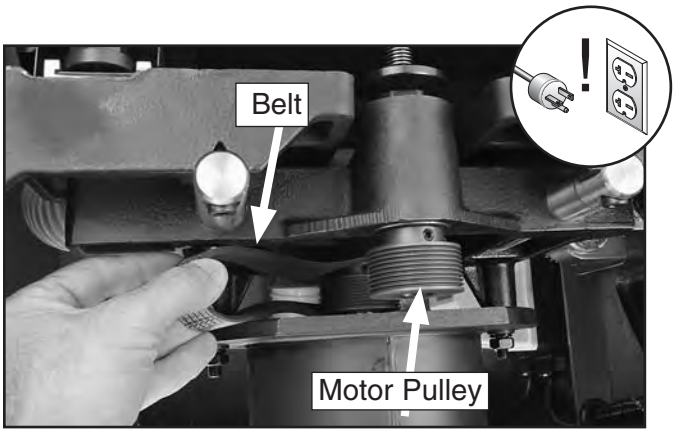

Figure 144. Removing belt.

8. Turn the belt sideways and slip it over the motor pulley, as shown in **Figure 145**, so it engages one or two grooves.

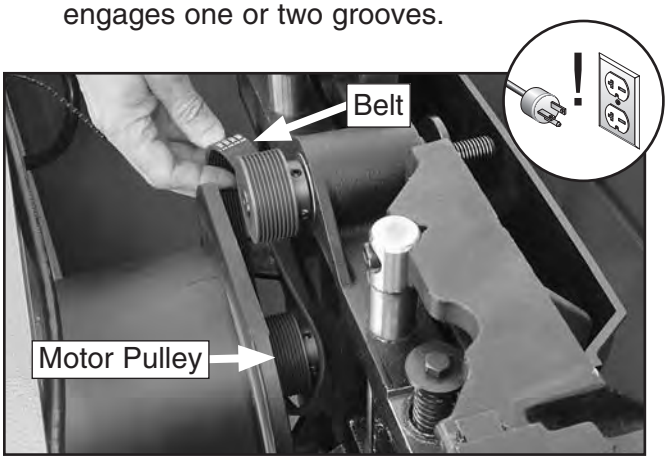

Figure 145. Installing belt (table removed for clarity.)

9. Push the belt inward and roll it onto the top pulley. Continue pushing the belt and rotating it up and down until it is centered on both pulleys, as shown in **Figure 146**.

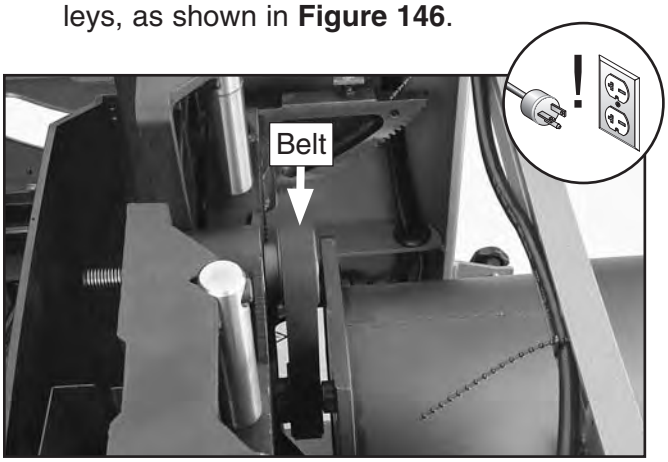

Figure 146. Belt installed (table removed for clarity.)

10. Follow **Steps 2-7** in "Tensioning Belt" to tension the belt.

SECTION 9: WIRING

These pages are current at the time of printing. However, in the spirit of improvement, we may make changes to the electrical systems of future machines. Study this section carefully. If there are differences between your machine and what is shown in this section, call Technical Support at (570) 546-9663 for assistance BEFORE making any changes to the wiring on your machine.

⚠WARNING
Wiring Safety Instructions

SHOCK HAZARD. Working on wiring that is connected to a power source is extremely dangerous. Touching electrified parts will result in personal injury including but not limited to severe burns, electrocution, or death. Disconnect the power from the machine before servicing electrical components!

MODIFICATIONS. Modifying the wiring beyond what is shown in the diagram may lead to unpredictable results, including serious injury or fire. This includes the installation of unapproved aftermarket parts.

WIRE CONNECTIONS. All connections must be tight to prevent wires from loosening during machine operation. Double-check all wires disconnected or connected during any wiring task to ensure tight connections.

CIRCUIT REQUIREMENTS. You MUST follow the requirements at the beginning of this manual when connecting your machine to a power source.

WIRE/COMPONENT DAMAGE. Damaged wires or components increase the risk of serious personal injury, fire, or machine damage. If you notice that any wires or components are damaged while performing a wiring task, replace those wires or components.

MOTOR WIRING. The motor wiring shown in these diagrams is current at the time of printing but may not match your machine. If you find this to be the case, use the wiring diagram inside the motor junction box.

CAPACITORS/INVERTERS. Some capacitors and power inverters store an electrical charge for up to 10 minutes after being disconnected from the power source. To reduce the risk of being shocked, wait at least this long before working on capacitors.

EXPERIENCING DIFFICULTIES. If you are experiencing difficulties understanding the information included in this section, contact our Technical Support at (570) 546-9663.

NOTICE

The photos and diagrams included in this section are best viewed in color. You can view these pages in color at www.grizzly.com.

COLOR KEY

BLACK	Bk	BLUE	Bl	YELLOW	Yl	LIGHT BLUE	Lb
WHITE	Wt	BROWN	Br	YELLOW GREEN	Yg	BLUE WHITE	Bw
GREEN	Gn	GRAY	Gy	PURPLE	Pu	TUR-QUOISE	Tu
RED	Rd	ORANGE	Or	PINK	Pk		

G0651/G0652 Electrical Components

Figure 147. G0651 motor junction box.

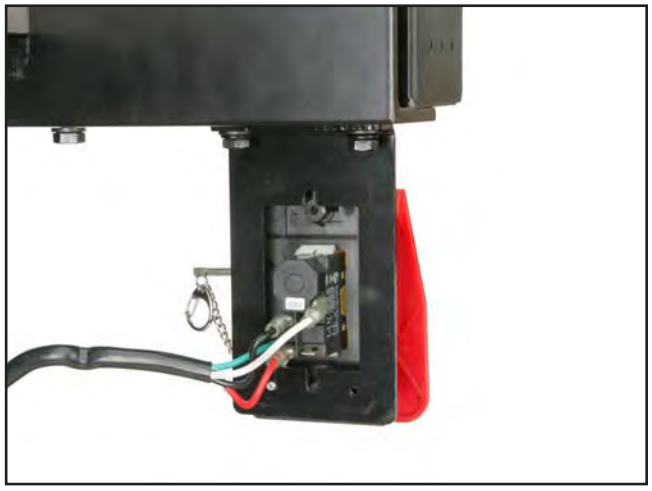

Figure 148. G0651/G0652 switch.

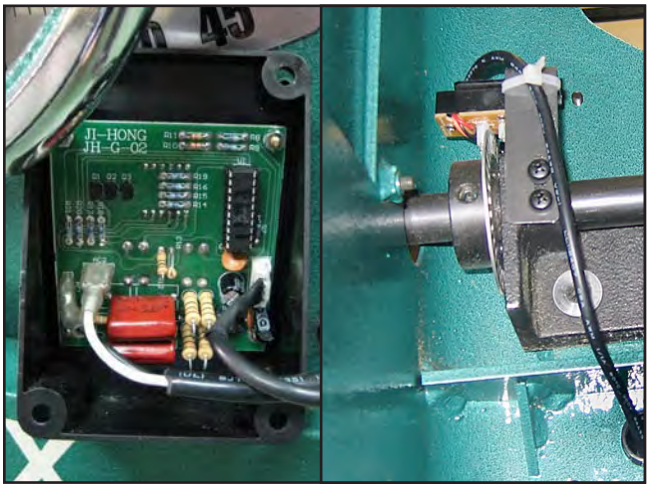

Figure 149. G0651/G0652 digital readout and angle sensor.

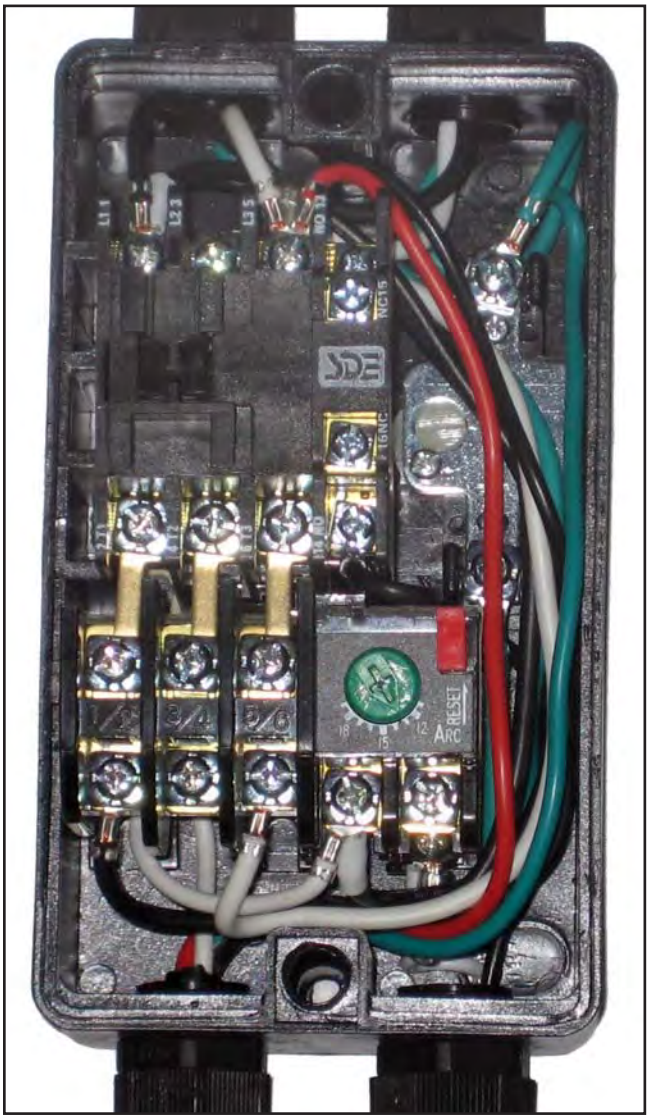

Figure 150. G0651 magnetic switch.

READ ELECTRICAL SAFETY ON PAGE 82!

G0651 Wiring Diagram 220V, 1-Ph

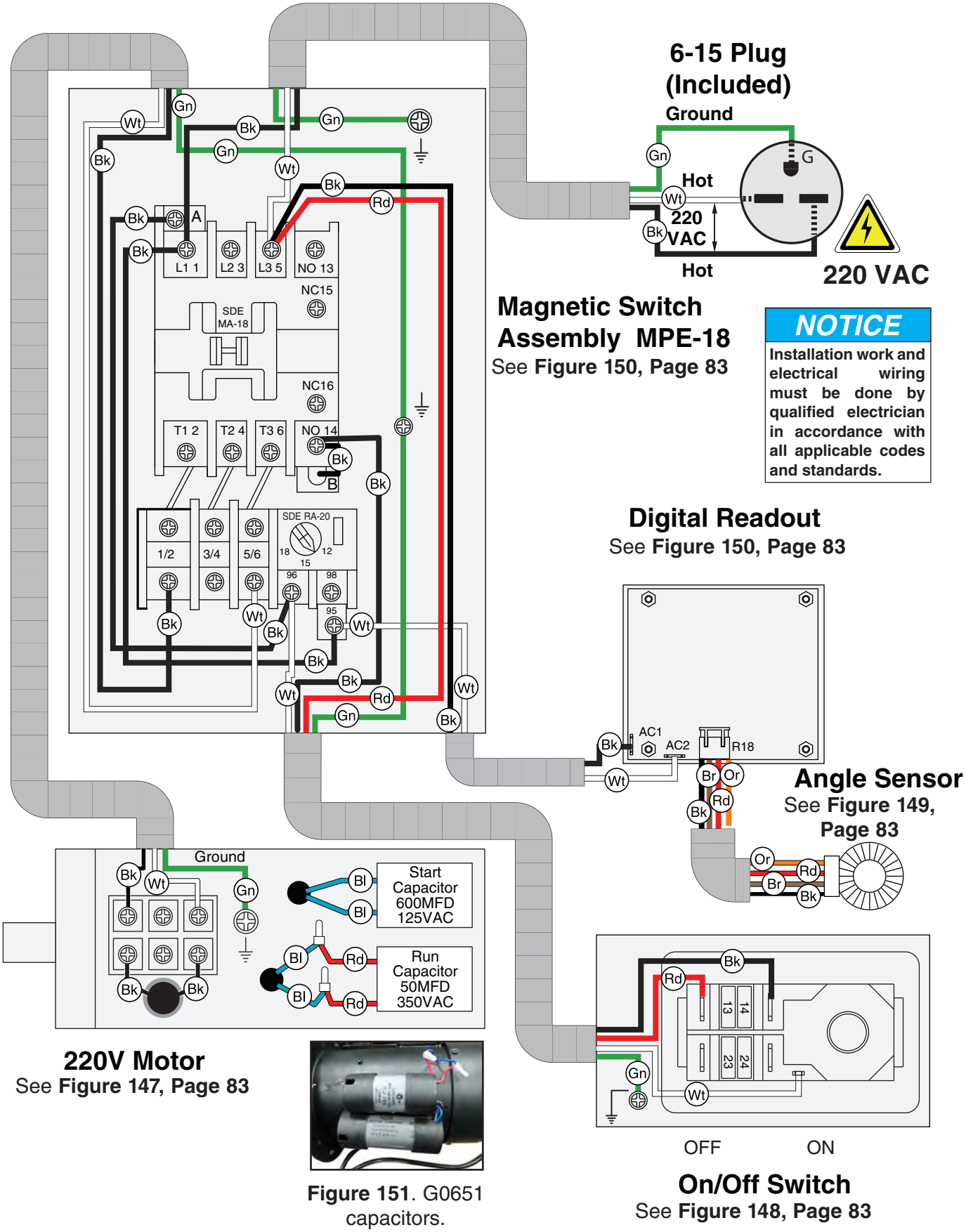

Figure 151. G0651 capacitors.

READ ELECTRICAL SAFETY ON PAGE 82!

G0652 Electrical Components

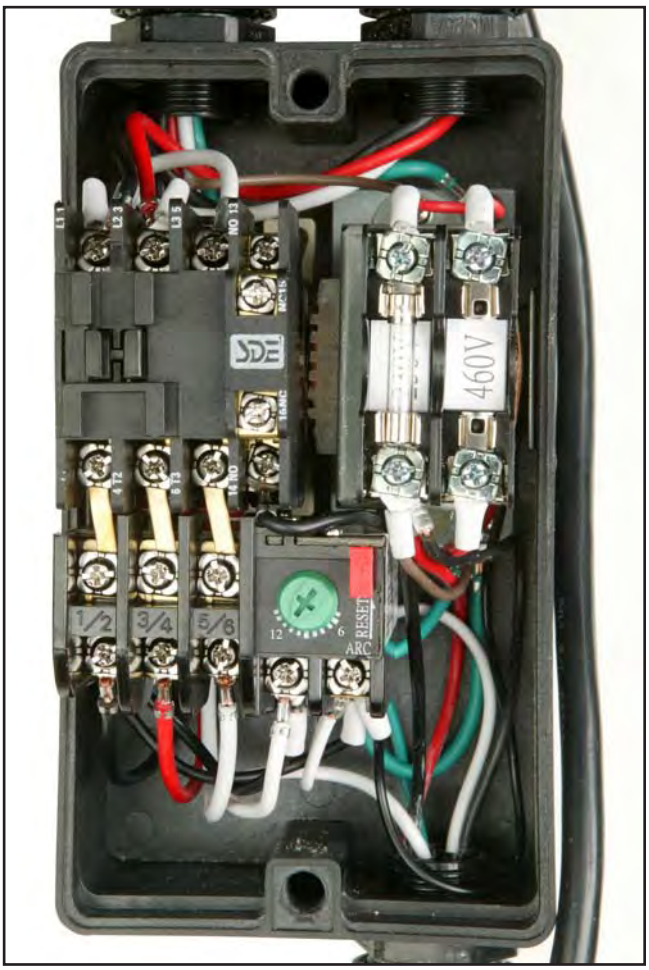

Figure 152. G0652 magnetic switch prewired to 220V, 3-phase.

Note: *The thermal relay in* ***Figure 152*** *is set for 12 amp, 220V, 3-phase operation.*

Figure 154. G0652 magnetic switch converted to 440V, 3-phase.

Note: *The therrmal relay in* ***Figure 154*** *is adjusted for 6 amp, 440V, 3-phase operation.*

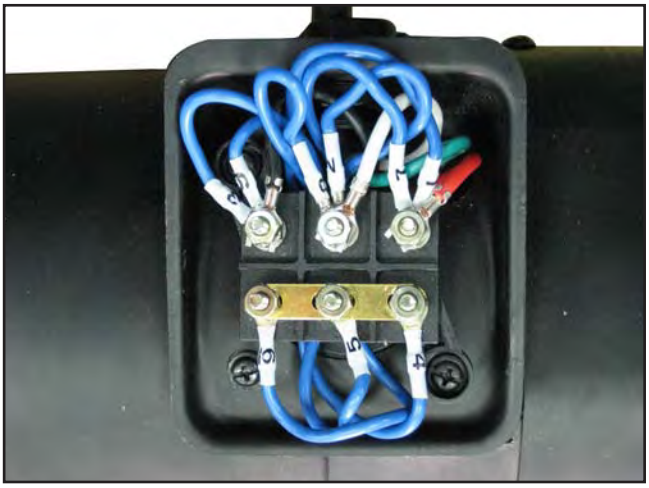

Figure 153. G0652 motor junction box wired for 220V.

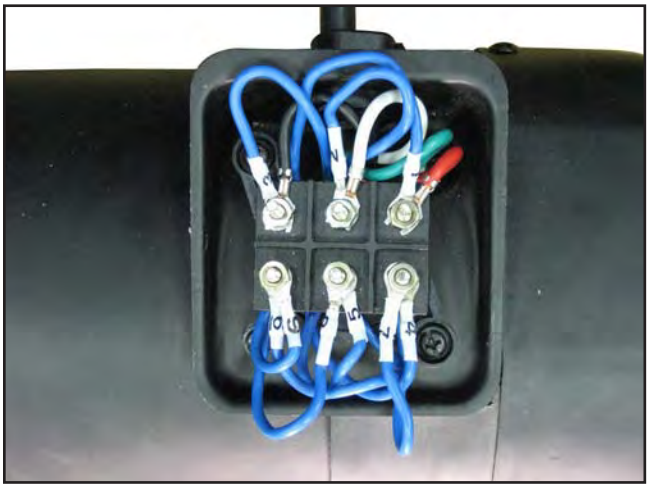

Figure 155. G0652 motor junction box wired for 440V.

READ ELECTRICAL SAFETY ON PAGE 82!

G0652 Wiring Diagram 220V, 3-Ph

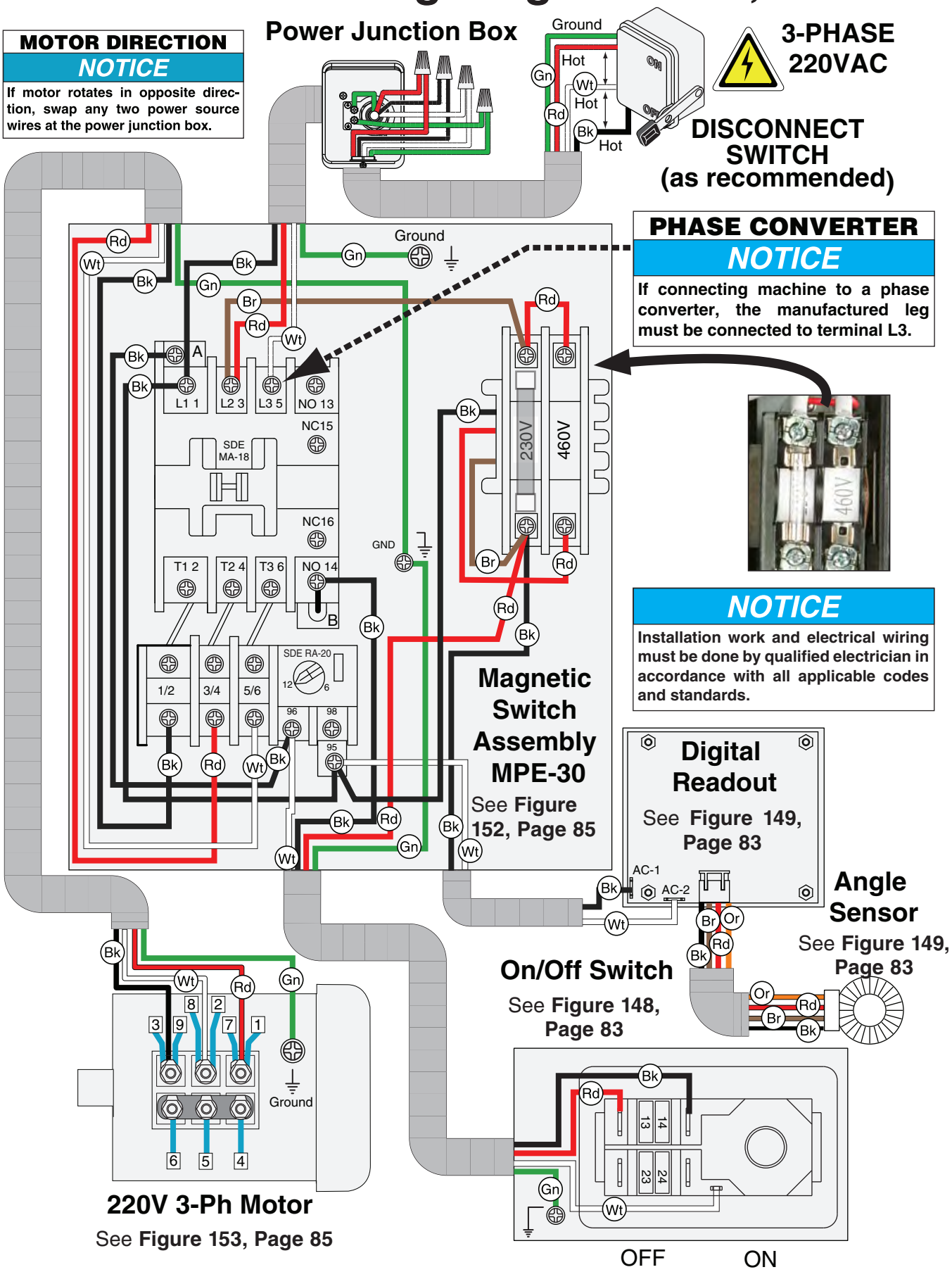

STOP READ ELECTRICAL SAFETY ON PAGE 82!

G0652 Wiring Diagram 440V, 3-Ph

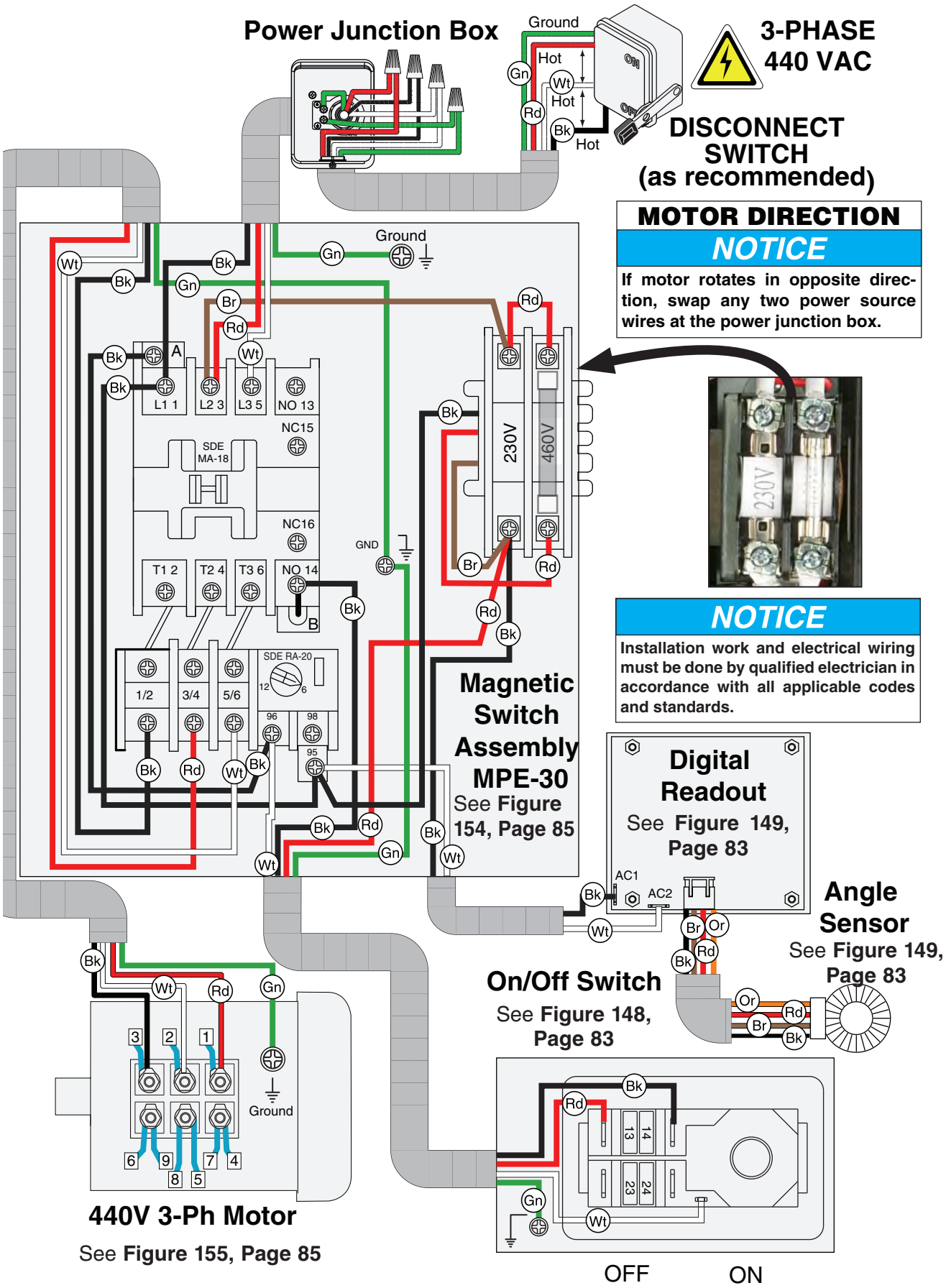

STOP *READ ELECTRICAL SAFETY ON PAGE 82!*

Motor and Arbor Breakdown

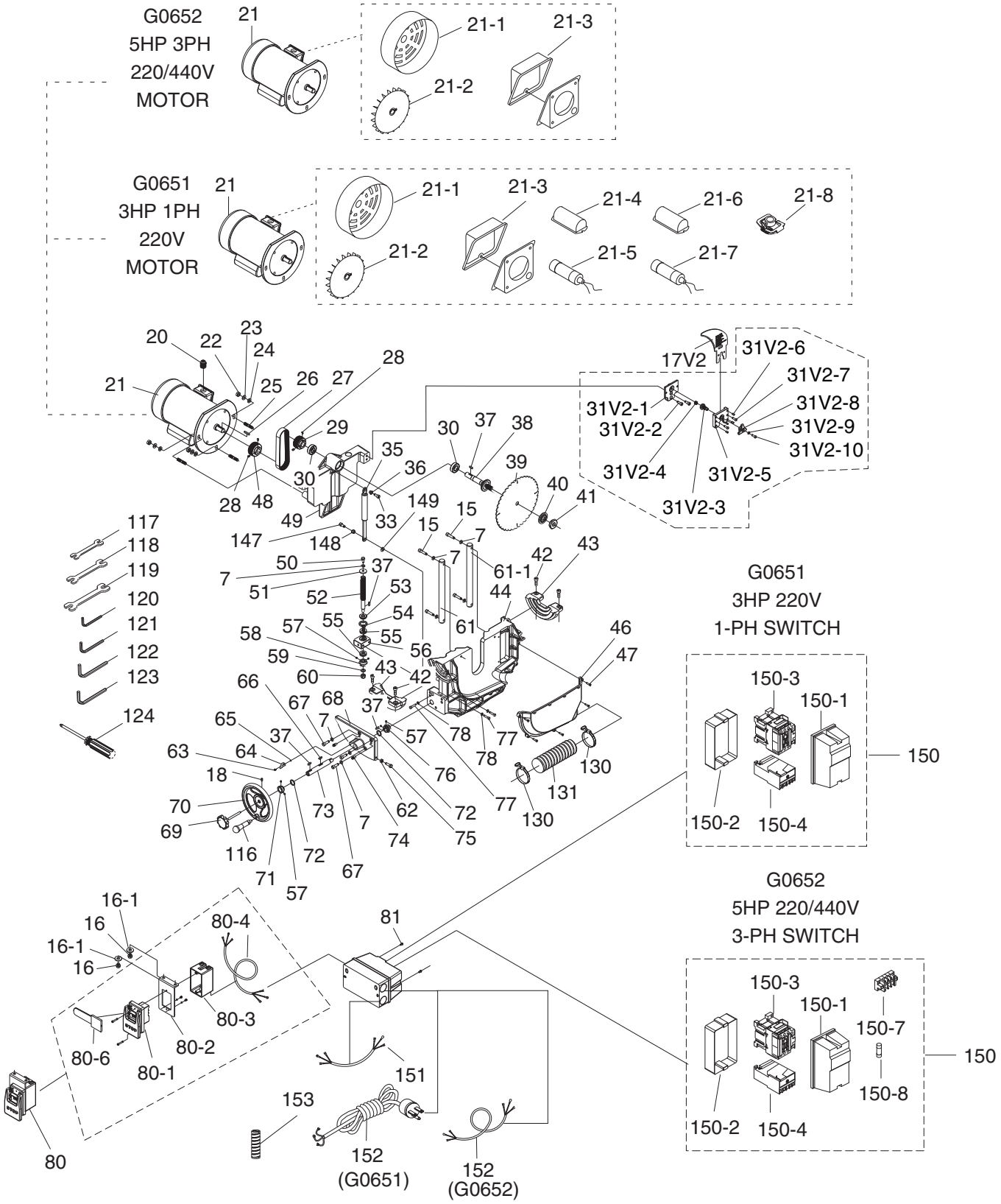

Motor and Arbor Parts List

REF	PART #	DESCRIPTION
7	PLW04M	LOCK WASHER 8MM
15	PSB40M	CAP SCREW M8-1.25 X 35
16	PB06M	HEX BOLT M8-1.25 X 12
16-1	PW01M	FLAT WASHER 8MM
17V2	P0661042V2	RIVING KNIFE V2.01.10
20	P0651020	STRAIN RELIEF PGA 16-14B
22	PN02M	HEX NUT M10-1.5
23	PLW06M	LOCK WASHER 10MM
24	PW04M	FLAT WASHER 10MM
25	P0651025	SPECIAL MOTOR BOLT
26	PK12M	KEY 5 X 5 X 30
27	P0651027	FLAT BELT 180J-9
28	PSS03M	SET SCREW M6-1 X 8
29	P0651029	PULLEY
30	P6004-2RS	BALL BEARING 6004-2RS
31V2	P0661044V2	CLAMPING BRACKET V2.01.10
31V2-1	P0661044V2-1	MOUNTING BASE V2.01.10
31V2-2	PCAP14M	CAP SCREW M8-1.25 X 20
31V2-3	P0661044V2-4	LOCKING BOLT V2.01.10
31V2-4	P0661044V2-3	COMPRESSION SPRING V2.01.10
31V2-5	P0661044V2-5	MOUNTING PLATE V2.01.10
31V2-6	PSS31M	SET SCREW M5-.8 X 8
31V2-7	PBHS16M	BUTTON HD CAP SCR M5-.8 X 16
31V2-8	P0661044V2-8	HANDLE V2.01.10
31V2-9	PLW01M	LOCK WASHER 5MM
31V2-10	PBHS06M	BUTTON HD CAP SCR M5-.8 X 12
33	PSB11M	CAP SCREW M8-1.25 X 16
35	P0651035	STICK
36	P0651036	BUSHING
37	PK14M	KEY 5 X 5 X 18
38	P0651038	ARBOR SHAFT
39	P0651039	BLADE 10" X 40T
40	P0651040	ARBOR FLANGE
41	P0651041	ARBOR NUT 5/8"-12 RH
42	PSB72M	CAP SCREW M10-1.5 X 30
43	P0651043	TRUNNION SLIDE
44	P0651044	TRUNNION
46	P0651046	DUST CHUTE
47	PS06M	PHLP HD SCR M5-.8 X 20
48	P0651048	MOTOR PULLEY
49	P0651049	BRACKET
50	PB03M	HEX BOLT M8-1.25 X 16
51	PW01M	FLAT WASHER 8MM
52	P0651052	LEADSCREW
53	P0651053	BUSHING
54	P0651054	GASKET
55	P51102	THRUST BEARING 51102
56	P0651056	LEADSCREW BRACKET
57	PSS07M	SET SCREW M5-.8 X 5

REF	PART #	DESCRIPTION
58	P0651058	LEFT BEVEL GEAR
59	PW04M	FLAT WASHER 10MM
60	PLN10M	LOCK NUT M10-1.25
61	P0651061	LEFT SUPPORT
61-1	P0651061-1	RIGHT SUPPORT
62	PN03M	HEX NUT M8-1.25
63	PS14M	PHLP HD SCR M6-1 X 12
64	P0651064	TILT ARROW POINTER
65	PTLW05M	EXT TOOTH WASHER 6MM
66	P0651066	WOODRUFF KEY 5 X 20
67	PSB31M	CAP SCREW M8-1.25 X 25
68	P0651068	HEIGHT HANDWHEEL MTG PLATE
69	P0651069	LOCK KNOB
70	P0651070	HANDWHEEL
71	P0651071	LOCK COLLAR
72	P0651072	FLAT WASHER 19MM
73	P0651073	BLADE HT HANDWHEEL SHAFT
74	P0651074	ALIGNMENT PIN
75	PB20M	HEX BOLT M8-1.25 X 35
76	P0651076	RIGHT BEVEL GEAR
77	PSB06M	CAP SCREW M6-1 X 25
78	PLW03M	LOCK WASHER 6MM
80	P0651080	ON/OFF SWITCH ASSEMBLY
80-1	P0651080-1	ON/OFF PUSH BUTTON SWITCH
80-2	P0651080-2	ON/OFF SWITCH BRACKET
80-3	P0651080-3	ON/OFF SWITCH BOX
80-4	P0651080-4	ON/OFF SWICH CORD 16AWG X 4C
80-6	P0651080-6	SWITCH DISABLING LOCK
81	P0651081	NYLON SCREW 3/16-24 X 1/2
116	P0651116	HANDWHEEL HANDLE
117	PWR810	WRENCH 8 X 10
118	PWR1113	WRENCH 11 X 13
119	PWR1417	WRENCH 14 X 17
120	PAW03M	HEX WRENCH 3MM
121	PAW04M	HEX WRENCH 4MM
122	PAW05M	HEX WRENCH 5MM
123	PAW06M	HEX WRENCH 6MM
124	P0651124	SCREWDRIVER PHLP/FLAT HD #1
130	P0651130	BODY
131	P0651131	DUST CHUTE HOSE 64 X 1000MM
147	P0651147	SPECIAL SCREW
148	P0651148	WAVE WASHER
149	PW04M	FLAT WASHER 10MM
151	P0651151	MOTOR CORD 14AWG X 3C
151	P0652151	MOTOR CORD 14AWG X 4C SJT
152	P0651152	POWER CORD 14AWG X 3C 6-15 PLUG
152	P0652152	PWR CORD 14AWG X 4C SJT W/NO PLUG
153	P0651153	WIRE PROTCTR 16 X 20 X 300MM

Motor and Arbor Parts List Continued

REF	PART #	DESCRIPTION
G0651 3HP, 220V, SINGLE-PHASE MOTOR		
21	P0651021	MOTOR 3HP, 1 PHASE
21-1	P0651021-1	MOTOR FAN COVER
21-2	P0651021-2	MOTOR FAN
21-3	P0651021-3	JUNCTION BOX
21-4	P0651021-4	RUN CAPACITOR COVER
21-5	P0651021-5	R CAP 50M 250V 1-1/2 X 2-3/8
21-6	P0651021-6	S CAP COVER
21-7	P0651021-7	S CAP 300M 125V 1-5/16 X 2-3/8
21-8	P0651021-8	CENTRIFUGAL SWITCH

REF	PART #	DESCRIPTION
G0652 35P, 220V/440V, THREE-PHASE MOTOR		
21	P0652021	MOTOR 5HP, 3 PHASE
21-1	P0652021-1	MOTOR FAN COVER
21-2	P0652021-2	MOTOR FAN
21-3	P0652021-3	JUNCTION BOX

G0651 3HP, 220V, 1-PHASE SWITCH		
150	P0651150	MAGNETIC SWITCH 3HP-1PH, 13A
150-1	P0651150-1	MAG SWITCH FRONT COVER
150-2	P0651150-2	MAG SWITCH BACK COVER
150-3	P0651150-3	CONTACTOR SDE MA-18 220V
150-4	P0651150-4	OL RELAY SDE RA-20 12-18

G0652 5HP, 220V/440V, 3-PH SWITCH		
150	P0652150	MAGNETIC SWITCH 5HP-3PH, 12A
150-1	P0652150-1	MAG SWITCH FRONT COVER
150-2	P0652150-2	MAG SWITCH BACK COVER
150-3	P0652150-3	CONTACTOR SDE MA-18 220V
150-4	P0652150-4	OL RELAY SDE RA-20 6-12
150-7	P0652150-7	TRANSFORMER
150-8	P0652150-8	FUSE

Cabinet Breakdown

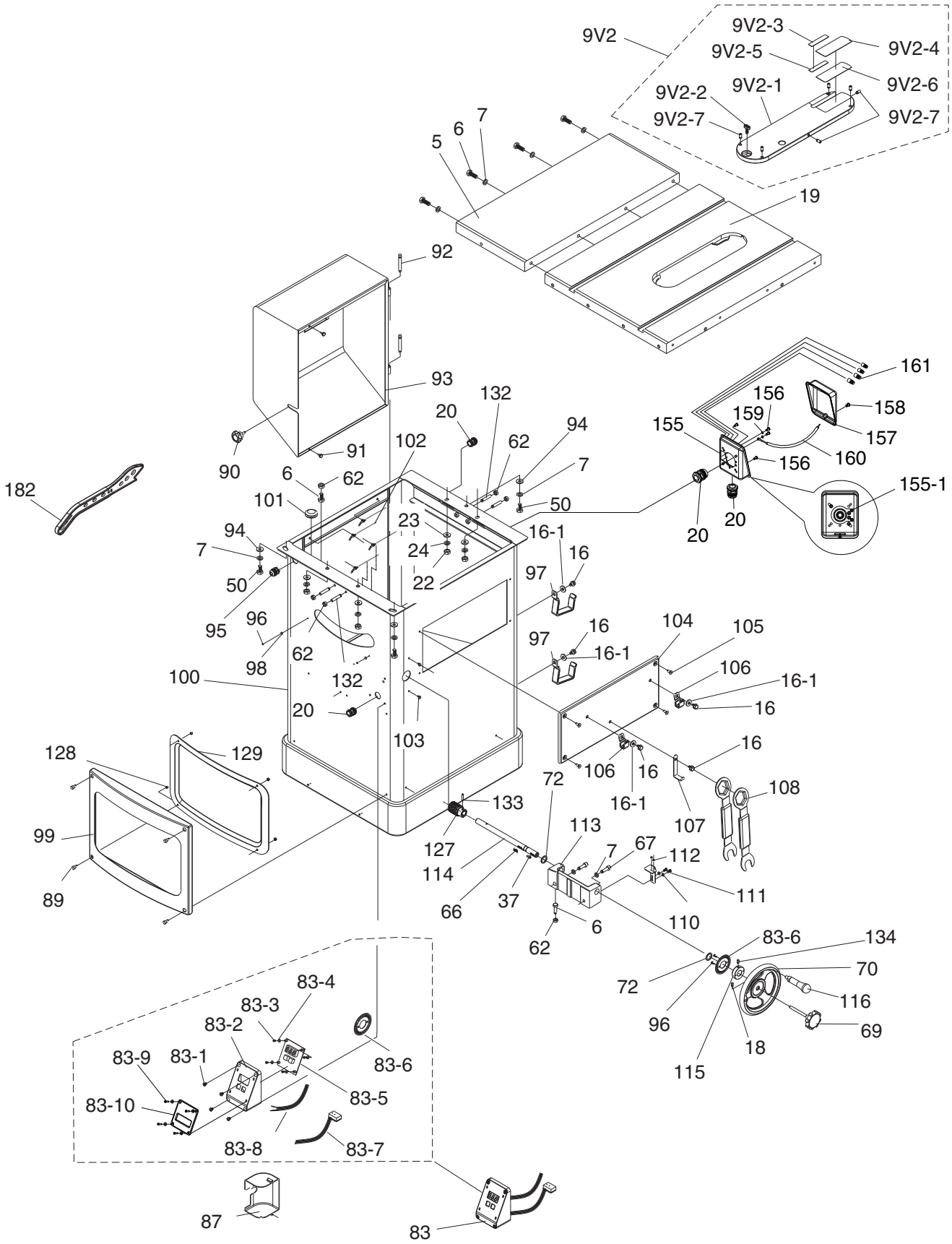

Cabinet Parts List

REF	PART #	DESCRIPTION
5	P0651005	EXTENSION WING
6	PB07M	HEX BOLT M8-1.25 X 25
7	PLW04M	LOCK WASHER 8MM
9V2	P0651009V2	TABLE INSERT ASSY V2.01.10
9V2-1	P0651009V2-1	PLATE V2.01.10
9V2-2	P0661006V2	LOCK KNOB M5-.8 V2.01.10
9V2-3	P0605X1103V2-3	LEFT PLATE V2.01.10
9V2-4	P0651009V2-4	RIGHT PLATE V2.01.10
9V2-5	P0651009V2-5	LEFT TAPE 14MM V2.01.10
9V2-6	P0605X1103V2-6	RIGHT TAPE 35MM V2.01.10
9V2-7	PSS04M	SET SCREW M6-1 X 12
16	PB06M	HEX BOLT M8-1.25 X 12
16-1	PW01M	FLAT WASHER 8MM
17	P0651017	SPLITTER
18	PSS01M	SET SCREW M6-1 X 10
19	P0651019	TABLE
20	P0651020	STRAIN RELIEF PGA 16-14B
22	PN02M	HEX NUT M10-1.5
23	PLW06M	LOCK WASHER 10MM
24	PW04M	FLAT WASHER 10MM
37	PK14M	KEY 5 X 5 X 18
50	PB03M	HEX BOLT M8-1.25 X 16
62	PN03M	HEX NUT M8-1.25
66	PK14M	KEY 5 X 5 X 18
67	PSB31M	CAP SCREW M8-1.25 X 25
69	P0651069	LOCK KNOB
70	P0651070	HANDWHEEL
72	P0651072	FLAT WASHER 19MM
83	P0651083	DIGITAL SENSOR ASSEMBLY
83-1	PS05M	PHLP HD SCR M5-.8 X 8
83-2	P0651083-2	DIGITAL READOUT COVER
83-3	PS79M	PHLP HD SCR M3-.5 X 8
83-4	PW07M	FLAT WASHER 3MM
83-5	P0651083-5	CIRCUIT BOARD
83-6	P0651083-6	SENSOR PLATE
83-7	P0651083-7	DATA CORD 24 AWG X 450
83-8	P0651083-8	DGTL READOUT CRD 18 AWG X 2C
83-9	PS50M	PHLP HD SCR M3-.5 X 12
83-10	P0651083-10	DIGITAL SENSOR COVER
87	P0651087	COVER
89	PSB26M	CAP SCREW M6-1 X 12

REF	PART #	DESCRIPTION
90	P0651090	LOCK KNOB M6-1 X 20
91	P0651091	RUBBER BUMPER
92	P0651092	ALIGNMENT PIN 8 X 54
93	P0651093	MOTOR ACCESS COVER
94	PW01M	FLAT WASHER 8MM
95	P0651095	STRAIN RELIEF PGA 13.5-11B
96	PS17M	PHLP HD SCR M4-.7 X 6
97	P0651097	FENCE MOUNTING BRACKET
98	PW05M	FLAT WASHER 4MM
99	P0651099	FRONT COVER
100	P0651100	CABINET
101	P0651101	STRAIN RELIEF
102	P0651102	CHAIN
103	PHTEK5M	TAP SCREW M4 X 12
104	P0651104	RIGHT COVER
105	PFH06M	FLAT HD SCR M6-1 X 20
106	P0651106	MITER GAUGE MTNG BRACKET
107	P0651107	WRENCH MOUNTING BRACKET
108	P0651108	ARBOR WRENCH
110	PW02M	FLAT WASHER 5MM
111	PB96M	HEX BOLT M5-.8 X 10
112	P0651112	L-PLATE
113	P0651113	BLADE TILT SHAFT BRACKET
114	P0651114	BLADE TILT SHAFT
115	P0651115	SPECIAL RING
116	P0651116	HANDWHEEL HANDLE
127	P0651127	SHAFT
128	PN06M	HEX NUT M5-.8
129	P0651129	PLATE
132	PSS42M	SET SCREW M8-1.25 X 50
133	P0651133	ALIGNMENT PIN 5 X 28
134	PSS16M	SET SCREW M8-1.25 X 10
155	P0651155	JUNCTION BOX BASE
155-1	P0651155-1	GROUNDING LABEL
156	PS09M	PHLP HD SCR M5-.8 X 10
157	P0651157	JUNCTION BOX COVER
158	PS18	PHLP HD SCR 10-24 X 1/4
159	PTLW02M	EXT TOOTH WASHER 5MM
160	P0651160	GROUND WIRE
161	P0651161	WIRE NUT
182	P0661141	PUSH STICK

Blade Guard Breakdown

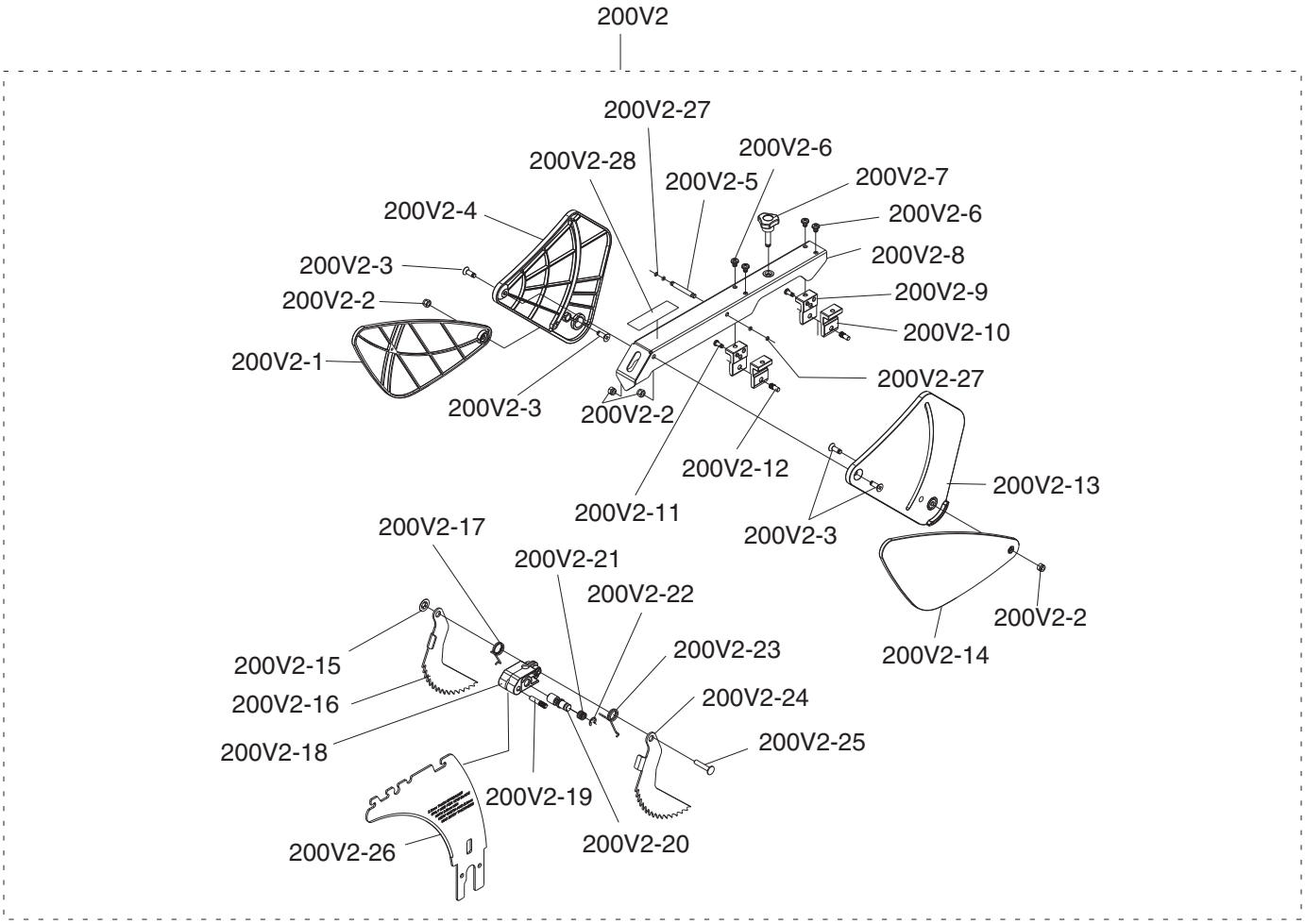

REF	PART #	DESCRIPTION
200V2	P0661002V2	BLADE GUARD ASSY V2.01.10
200V2-1	P0661002V2-1	LEFT PLATE V2.01.10
200V2-2	PLN02M	LOCK NUT M5-.8
200V2-3	PFH01M	FLAT HD SCR M5-.8 X 15
200V2-4	P0661002V2-4	LEFT COVER V2.01.10
200V2-5	P0661002V2-5	ROD CENTER PIN V2.01.10
200V2-6	PS19M	PHLP HD SCR M5-.8 X 6
200V2-7	P0661002V2-7	KNOB BOLT V2.01.10
200V2-8	P0661002V2-8	ROD V2.01.10
200V2-9	P0661002V2-9	LEFT BRACKET V2.01.10
200V2-10	P0661002V2-10	RIGHT BRACKET V2.01.10
200V2-11	PBHS24M	BUTTON HD CAP SCR M4-.7 X 10
200V2-12	P0661002V2-12	MOUNTING PIN V2.01.10
200V2-13	P0661002V2-13	RIGHT COVER V2.01.10
200V2-14	P0661002V2-14	RIGHT PLATE V2.01.10

REF	PART #	DESCRIPTION
200V2-15	P0661002V2-15	PUSH NUT 4MM V2.01.10
200V2-16	P0661002V2-16	LEFT PAWL V2.01.10
200V2-17	P0661002V2-17	RIGHT TORSN SPRING V2.01.10
200V2-18	P0661002V2-18	PAWL MOUNTING BRKT V2.01.10
200V2-19	P0661002V2-19	MOUNTING BRKT PIN V2.01.10
200V2-20	P0661002V2-20	MOUNTING BRKT SHFT V2.01.10
200V2-21	P0661002V2-21	SHAFT SPRING V2.01.10
200V2-22	PEC07M	E-CLIP 7MM
200V2-23	P0661002V2-23	LEFT TORSION SPRING V2.01.10
200V2-24	P0661002V2-24	RIGHT PAWL V2.01.10
200V2-25	P0661002V2-25	RIGHT PAWL SHAFT V2.01.10
200V2-26	P0661002V2-26	SPREADER V2.01.10
200V2-27	PORP003	O-RING 2.8 X 1.9 P3
200V2-28	P0661002V2-28	AMPUTATION HAZ LABEL V2.01.10

Fence Assembly Breakdown

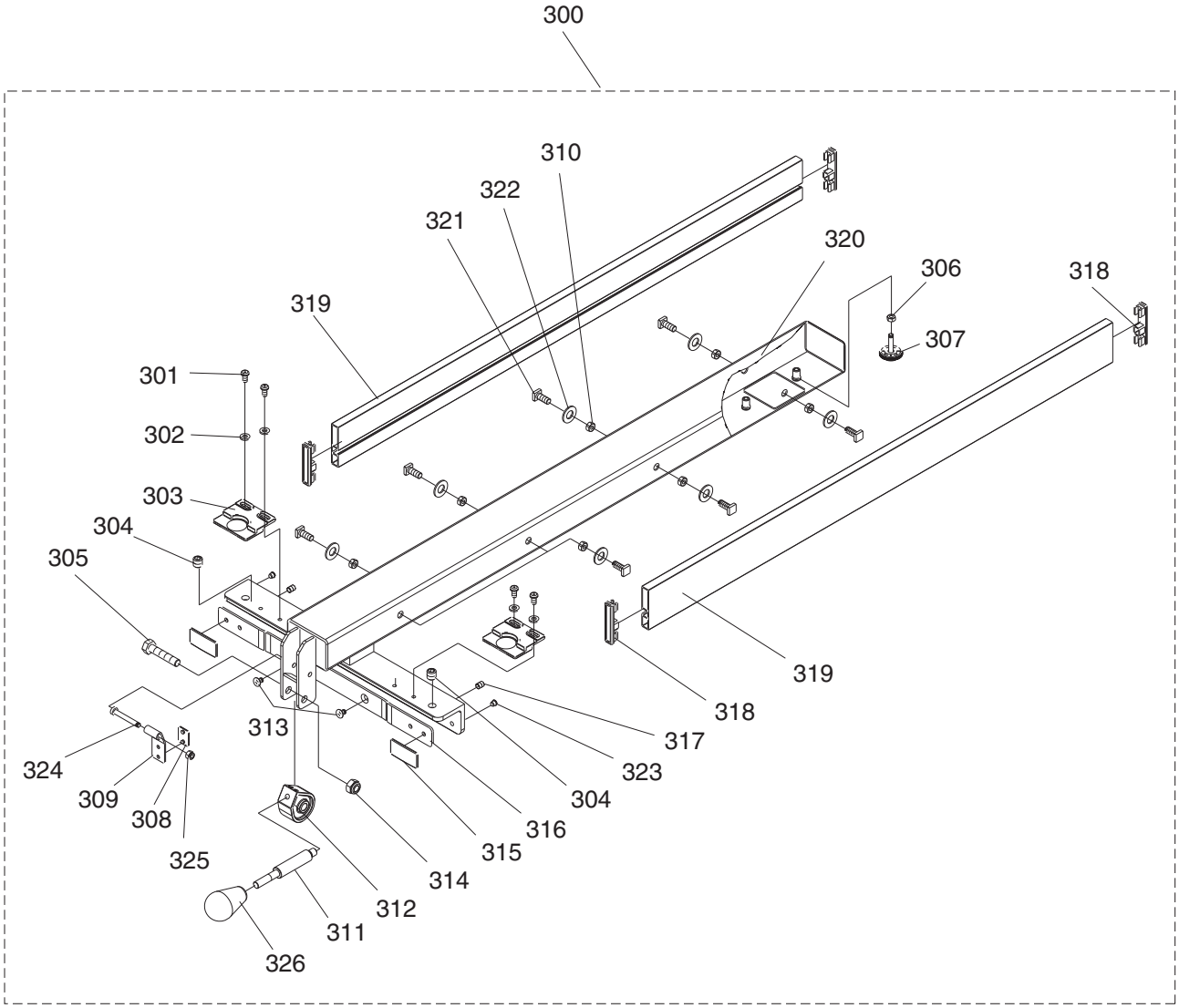

REF	PART #	DESCRIPTION
300	P0651300	FENCE ASSEMBLY
301	PS14M	PHLP HD SCR M6-1 X 12
302	PW03M	FLAT WASHER 6MM
303	P0651303	INDICATOR PLATE
304	P0651304	PLASTIC SET SCREW M12-1.75 X 13
305	PB73M	HEX BOLT M10-1.5 X 50
306	PN01M	HEX NUT M6-1
307	P0651307	REAR RAIL FOOT
308	P0651308	FRONT PLATE
309	P0651309	FRONT BRACKET
310	PN03M	HEX NUT M8-1.25
311	P0651311	FENCE HANDLE SHAFT
312	P0651312	CAM
313	PFH04M	FLAT HD SCR M6-1 X 8

REF	PART #	DESCRIPTION
314	PLN05M	LOCK NUT M10-1.5
315	P0651315	PLASTIC PAD
316	P0651316	CLAMPING BRACKET
317	PSS20M	SET SCREW M8-1.25 X 8
318	P0651318	PLATE CAP
319	P0651319	FENCE PLATE
320	P0651320	FENCE
321	P0651321	T-BOLT M8-1.25 X 20
322	PW01M	FLAT WASHER 8MM
323	P0651323	PLASTIC BUMPER
324	PB71M	HEX BOLT M6-1 X 45
325	PLN03M	LOCK NUT M6-1
326	P0651326	FENCE LOCK HANDLE

Miter Gauge Breakdown

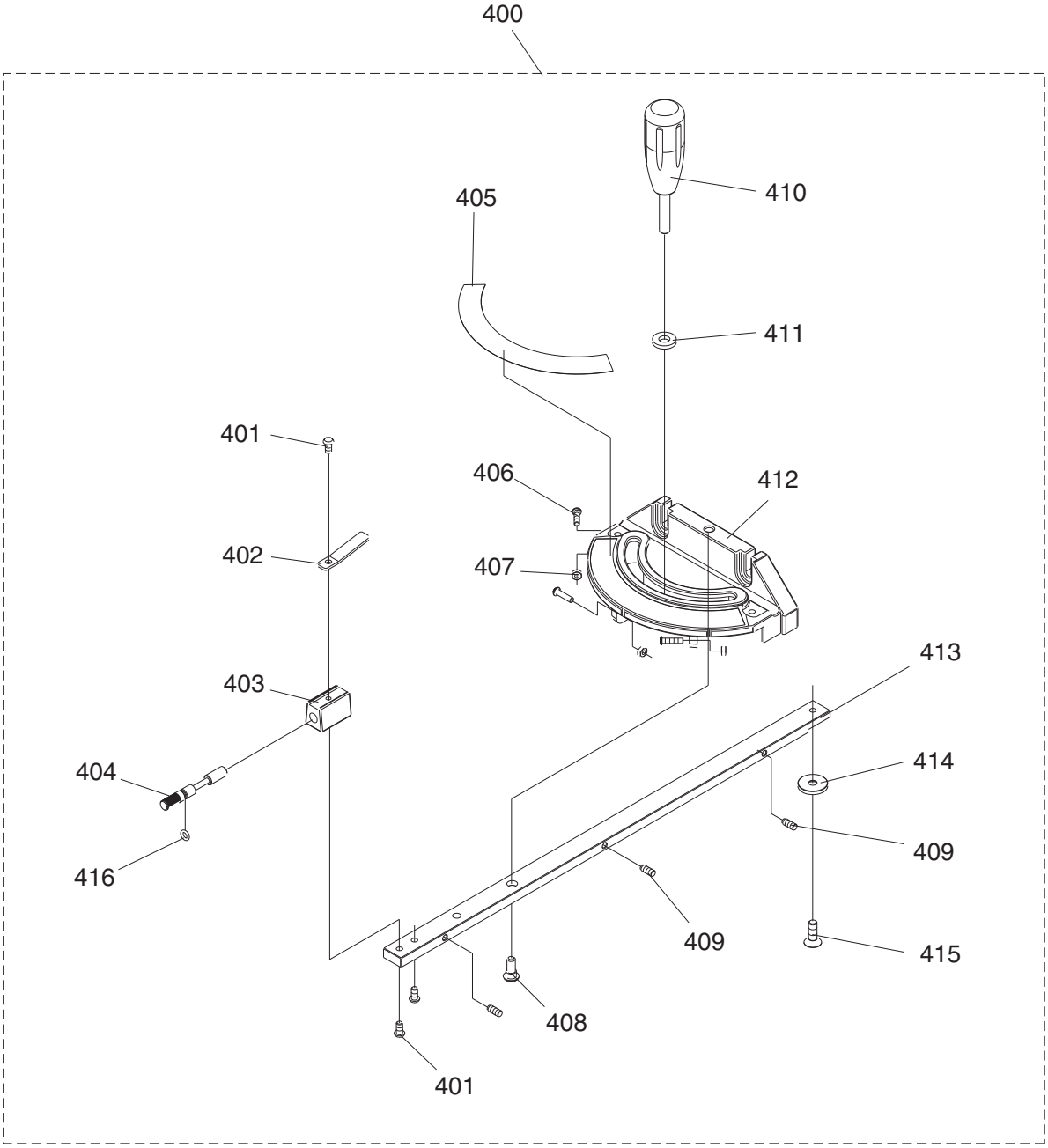

REF	PART #	DESCRIPTION
400	P0651400	MITER GAUGE ASSEMBLY
401	PS06	PHLP HD SCR 10-24 X 3/8
402	P0651402	POINTER
403	P0651403	BLOCK
404	P0651404	SHAFT
405	P0651405	MITER GAUGE SCALE
406	PS25	PHLP HD SCR 8-32 X 5/8
407	PN14	HEX NUT 8-32
408	PS04	PHLP HD SCR 1/4-20 X 1/2

REF	PART #	DESCRIPTION
409	P0651409	SPECIAL SET SCREW M5-.8 X 12
410	P0651410	MITER GAUGE HANDLE
411	PW01M	FLAT WASHER 8MM
412	P0651412	MITER GAUGE
413	P0651413	PLATE
414	P0651414	GUIDE PLATE
415	PFH9M	FLAT HD SCR M6-1 X 6
416	PORP005	O-RING 4.8 X 1.9 P5

Extension Table Breakdown

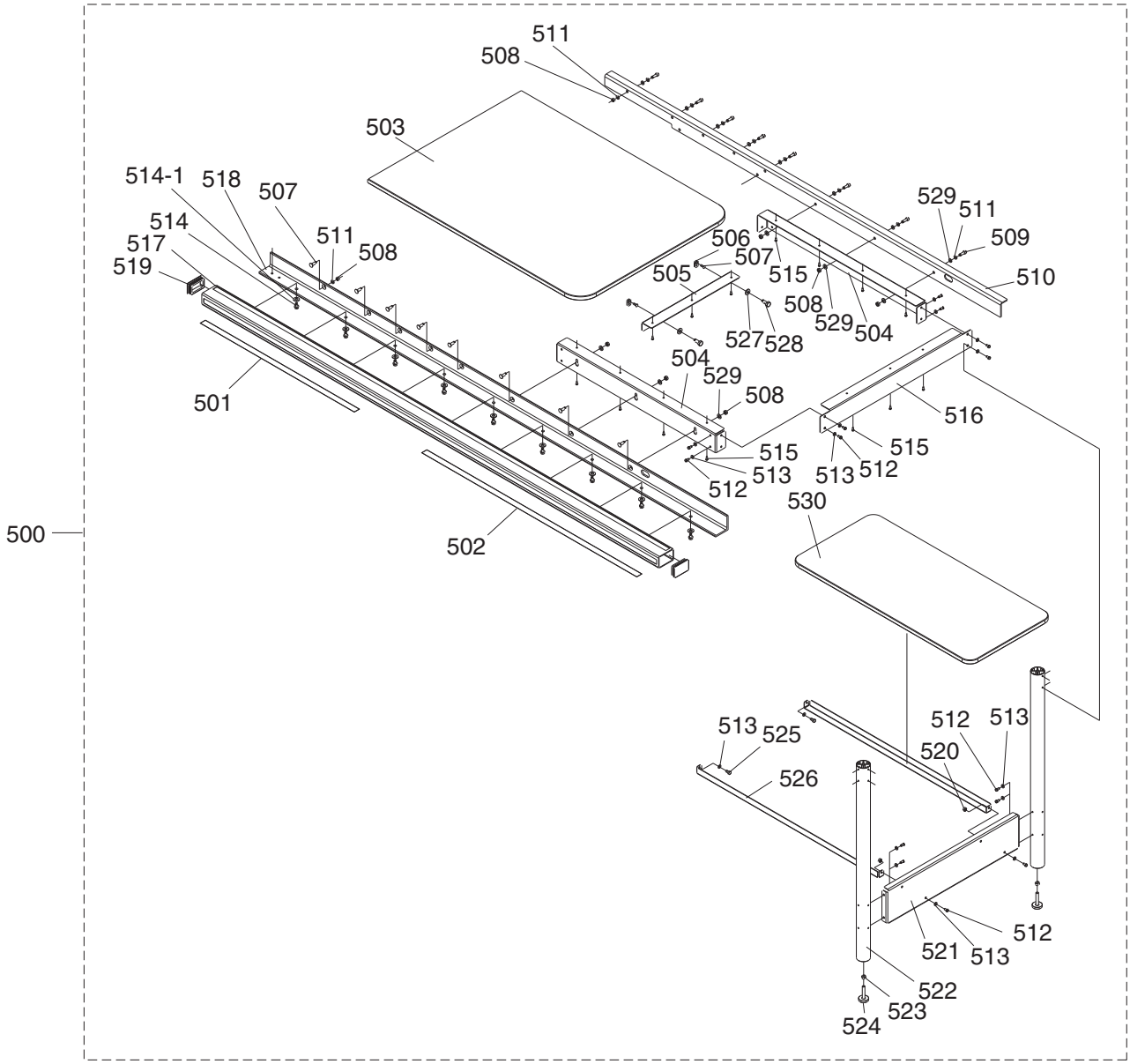

REF	PART #	DESCRIPTION
500	P0651500	EXTENSION TABLE ASSEMBLY
501	P0651501	LEFT SCALE 18"
502	P0651502	RIGHT SCALE 52"
503	P0651503	EXTENSION TABLE PLATE
504	P0651504	EXTENSION TABLE SUPPORT
505	P0651505	FRONT EXTENSION BRACKET
506	P0651506	MOUNTING PLATE
507	PFH21M	FLAT HD SCR M8-1.25 X 25
508	PN03M	HEX NUT M8-1.25
509	PSB31M	CAP SCREW M8-1.25 X 25
510	P0651510	REAR RAIL 79" LONG
511	PLW04M	LOCK WASHER 8MM
512	PS14M	PHLP HD SCR M6-1 X 12
513	PW03M	FLAT WASHER 6MM
514	PB06M	HEX BOLT M8-1.25 X 12
514-1	PW01M	FLAT WASHER 8MM

REF	PART #	DESCRIPTION
515	PHTEK8M	TAP SCREW M4 X 20
516	P0651516	RIGHT EXTENSION BRACKET
517	P0651517	FENCE TUBE (91-1/2" LONG)
518	P0651518	FRONT RAIL (91-1/2" LONG)
519	P0651519	END CAP
520	PN01M	HEX NUT M6-1
521	P0651521	SHELF END PLATE
522	P0651522	SUPPORT LEG
523	PN08	HEX NUT 3/8-16
524	P0651524	FOOT
525	PB02M	HEX BOLT M6-1 X 12
526	P0651526	LOWER SHELF BRACKET
527	PW01M	FLAT WASHER 8MM
528	PB06M	HEX BOLT M8-1.25 X 12
529	PW01M	FLAT WASHER 8MM
530	P0651530	LOWER SHELF

Outfeed Table Breakdown

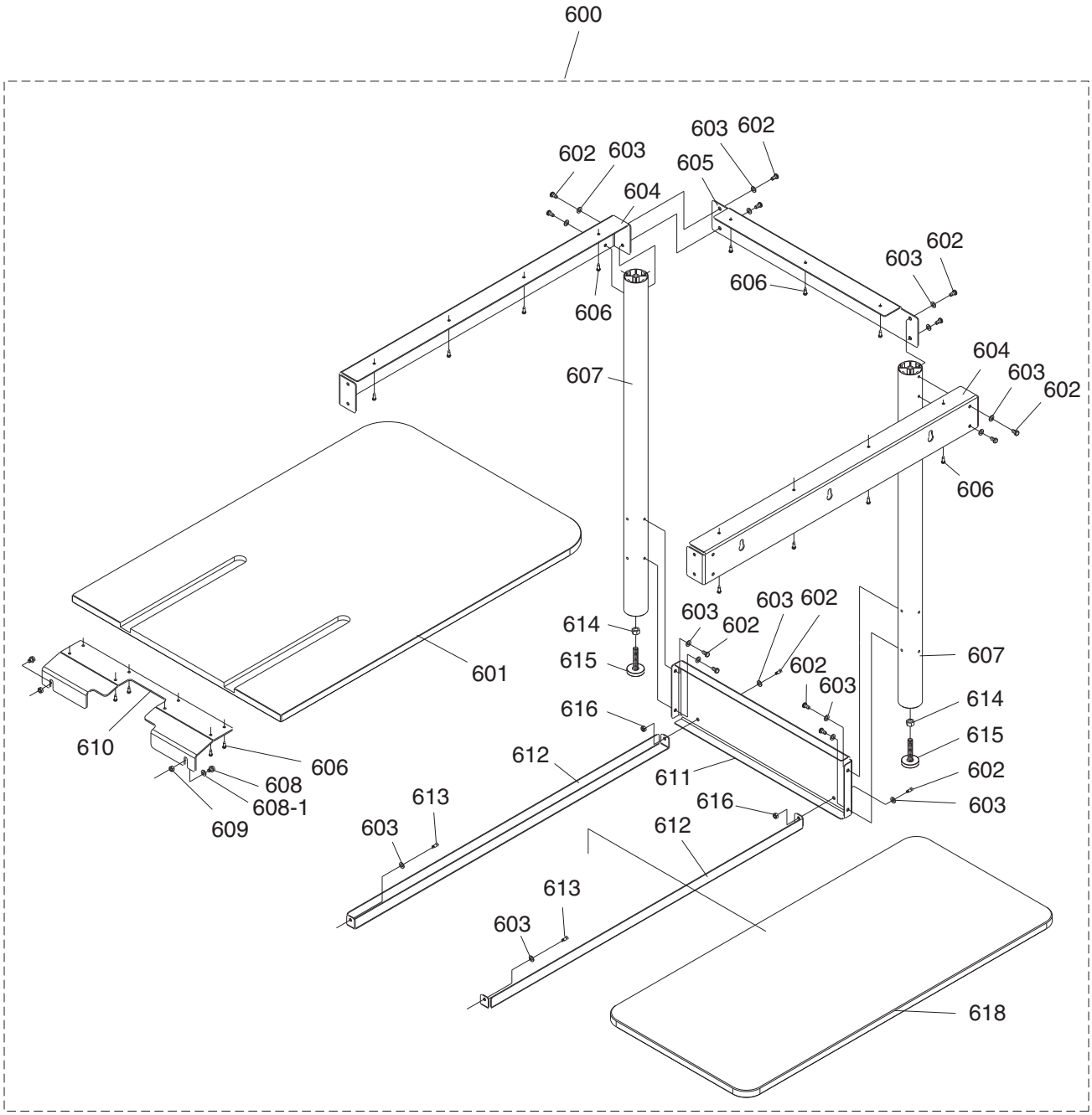

REF	PART #	DESCRIPTION
600	P0651600	OUTFEED TABLE ASSEMBLY
601	P0651601	OUTFEED TABLE PLATE
602	PS14M	PHLP HD SCR M6-1 X 12
603	PW03M	FLAT WASHER 6MM
604	P0651604	OUTFEED TABLE SUPPORT
605	P0651605	OUTFEED TABLE BRACKET
606	PHTEK8M	TAP SCREW M4 X 20
607	P0651607	SUPPORT LEG
608	PB03M	HEX BOLT M8-1.25 X 16
608-1	PW01M	FLAT WASHER 8MM

REF	PART #	DESCRIPTION
609	PN03M	HEX NUT M8-1.25
610	P0651610	FRONT OUTFEED TABLE BRACKET
611	P0651611	SHELF END PLATE
612	P0651612	LOWER SHELF BRACKET
613	PB02M	HEX BOLT M6-1 X 12
614	PN08	HEX NUT 3/8-16
615	P0651615	FOOT
616	PN01M	HEX NUT M6-1
618	P0651618	LOWER SHELF

Label Placement

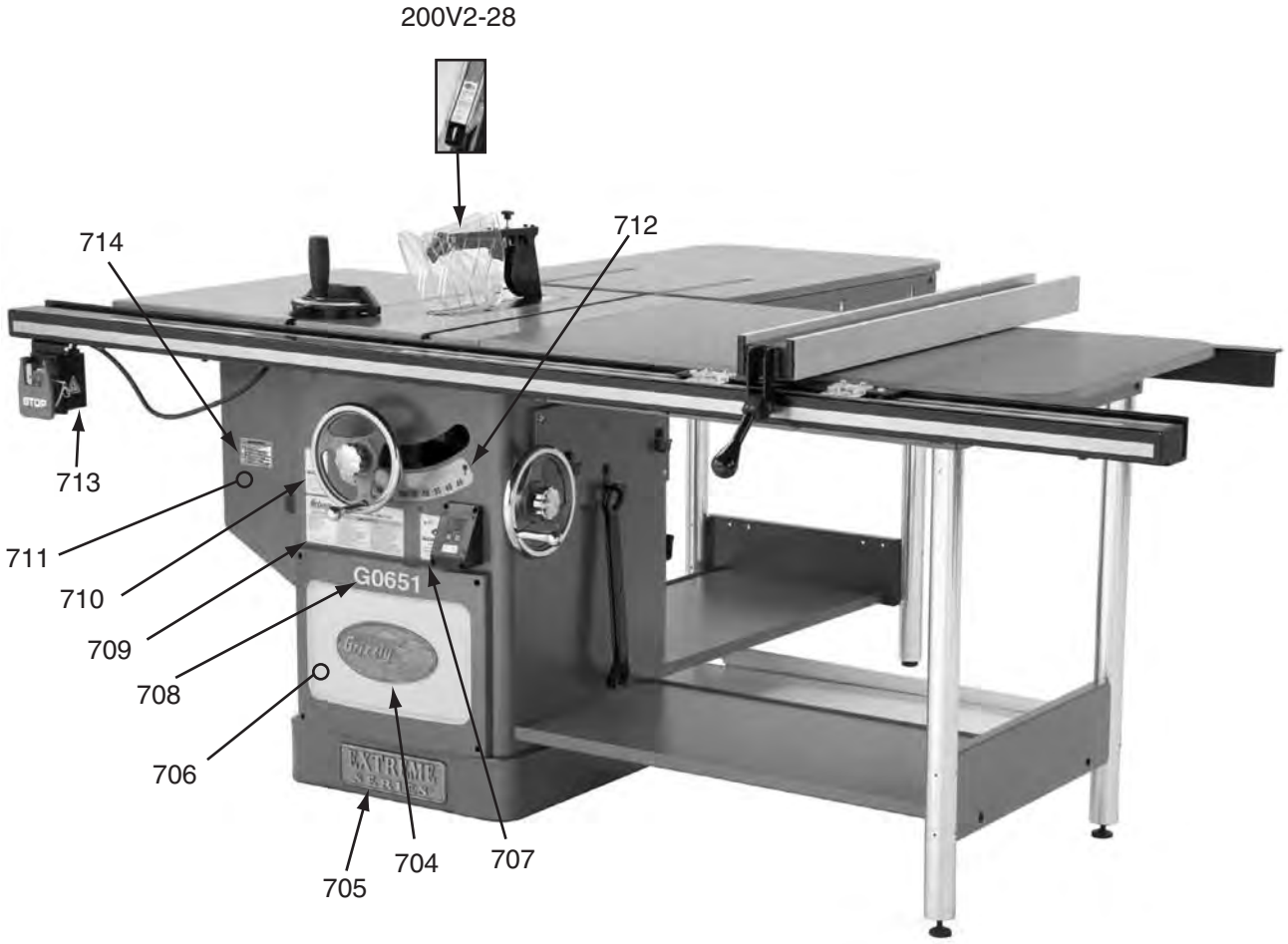

REF	PART #	DESCRIPTION
200V2-28	P0661002V2-28	AMPUTATION HAZ LABEL V2.01.10
704	G8589	GRIZZLY NAMEPLATE-LARGE
705	H7942	EXTREME SERIES PLATE
706	PPAINT-11	PUTTY TOUCH-UP PAINT
707	P0651707	SAFETY GLASSES-HEARING LABEL
708	P0651708	MODEL NUMBER LABEL G0651
708	P0652708	MODEL NUMBER LABEL G0652

REF	PART #	DESCRIPTION
709	P0651709	MACHINE ID LABEL G0651
709	P0652709	MACHINE ID LABEL G0652
710	PLABEL-12A	READ MANUAL-VERTICAL NS 7/05
711	PPAINT-1	GRIZZLY GREEN PAINT
712	P0651712	BLADE TILT ANGLE LABEL
713	PLABEL-14	ELECTRICITY LABEL
714	P0651714	UL 987 WARNING LABEL

⚠WARNING

Safety labels warn about machine hazards and ways to prevent injury. The owner of this machine MUST maintain the original location and readability of the labels on the machine. If any label is removed or becomes unreadable, REPLACE that label before using the machine again. Contact Grizzly at (800) 523-4777 or www.grizzly.com to order new labels.

Grizzly Industrial, Inc. WARRANTY CARD

Name _____

Street _____

City _____ State _____ Zip _____

Phone # _____ Email _____ Invoice # _____

Model # _____ Order # _____ Serial # _____

The following information is given on a voluntary basis. It will be used for marketing purposes to help us develop better products and services. ***Of course, all information is strictly confidential.***

1. How did you learn about us?

____ Advertisement ____ Friend ____ Catalog
____ Card Deck ____ Website ____ Other:

2. Which of the following magazines do you subscribe to?

____ Cabinetmaker & FDM
____ Family Handyman
____ Hand Loader
____ Handy
____ Home Shop Machinist
____ Journal of Light Cont.
____ Live Steam
____ Model Airplane News
____ Old House Journal
____ Popular Mechanics
____ Popular Science
____ Popular Woodworking
____ Precision Shooter
____ Projects in Metal
____ RC Modeler
____ Rifle
____ Shop Notes
____ Shotgun News
____ Today's Homeowner
____ Wood
____ Wooden Boat
____ Woodshop News
____ Woodsmith
____ Woodwork
____ Woodworker West
____ Woodworker's Journal
____ Other:

3. What is your annual household income?

____ $20,000-$29,000 ____ $30,000-$39,000 ____ $40,000-$49,000
____ $50,000-$59,000 ____ $60,000-$69,000 ____ $70,000+

4. What is your age group?

____ 20-29 ____ 30-39 ____ 40-49
____ 50-59 ____ 60-69 ____ 70+

5. How long have you been a woodworker/metalworker?

____ 0-2 Years ____ 2-8 Years ____ 8-20 Years ____ 20+ Years

6. How many of your machines or tools are Grizzly?

____ 0-2 ____ 3-5 ____ 6-9 ____ 10+

7. Do you think your machine represents a good value? _____Yes _____No

8. Would you recommend Grizzly Industrial to a friend? _____Yes _____No

9. Would you allow us to use your name as a reference for Grizzly customers in your area?
Note: *We never use names more than 3 times.* _____Yes _____No

10. Comments: _____

_____

_____

_____

CUT ALONG DOTTED LINE

FOLD ALONG DOTTED LINE

Place
Stamp
Here

GRIZZLY INDUSTRIAL, INC.
P.O. BOX 2069
BELLINGHAM, WA 98227-2069

FOLD ALONG DOTTED LINE

Send a Grizzly Catalog to a friend:

Name_____

Street_____

City_____State_____Zip_____

TAPE ALONG EDGES--PLEASE DO NOT STAPLE

WARRANTY AND RETURNS

Grizzly Industrial, Inc. warrants every product it sells for a period of **1 year** to the original purchaser from the date of purchase. This warranty does not apply to defects due directly or indirectly to misuse, abuse, negligence, accidents, repairs or alterations or lack of maintenance. This is Grizzly's sole written warranty and any and all warranties that may be implied by law, including any merchantability or fitness, for any particular purpose, are hereby limited to the duration of this written warranty. We do not warrant or represent that the merchandise complies with the provisions of any law or acts unless the manufacturer so warrants. In no event shall Grizzly's liability under this warranty exceed the purchase price paid for the product and any legal actions brought against Grizzly shall be tried in the State of Washington, County of Whatcom.

We shall in no event be liable for death, injuries to persons or property or for incidental, contingent, special, or consequential damages arising from the use of our products.

To take advantage of this warranty, contact us by mail or phone and give us all the details. We will then issue you a "Return Number,'' which must be clearly posted on the outside as well as the inside of the carton. We will not accept any item back without this number. Proof of purchase must accompany the merchandise.

The manufacturers reserve the right to change specifications at any time because they constantly strive to achieve better quality equipment. We make every effort to ensure that our products meet high quality and durability standards and we hope you never need to use this warranty.

Please feel free to write or call us if you have any questions about the machine or the manual.

Thank you again for your business and continued support. We hope to serve you again soon.

grizzly.com®
TOOL WEBSITE

Buy Direct and Save with Grizzly® – Trusted, Proven and a Great Value!

~Since 1983~

Visit Our Website Today For Current Specials!

ORDER

24 HOURS A DAY!

1-800-523-4777

VISA MasterCard DISCOVER NOVUS AMERICAN EXPRESS®