MODEL G0852 1.5HP QUIET CYCLONE DUST COLLECTOR

OWNER'S MANUAL

(For models manufactured since 12/18)

C US
265752

#KB19640 PRINTED IN TAIWAN
V1.08.19

⚠ WARNING!

This manual provides critical safety instructions on the proper setup, operation, maintenance, and service of this machine/tool. Save this document, refer to it often, and use it to instruct other operators.

Failure to read, understand and follow the instructions in this manual may result in fire or serious personal injury—including amputation, electrocution, or death.

The owner of this machine/tool is solely responsible for its safe use. This responsibility includes but is not limited to proper installation in a safe environment, personnel training and usage authorization, proper inspection and maintenance, manual availability and comprehension, application of safety devices, cutting/sanding/grinding tool integrity, and the usage of personal protective equipment.

The manufacturer will not be held liable for injury or property damage from negligence, improper training, machine modifications or misuse.

⚠ WARNING!

Some dust created by power sanding, sawing, grinding, drilling, and other construction activities contains chemicals known to the State of California to cause cancer, birth defects or other reproductive harm. Some examples of these chemicals are:

- **Lead from lead-based paints.**
- **Crystalline silica from bricks, cement and other masonry products.**
- **Arsenic and chromium from chemically-treated lumber.**

Your risk from these exposures varies, depending on how often you do this type of work. To reduce your exposure to these chemicals: Work in a well ventilated area, and work with approved safety equipment, such as those dust masks that are specially designed to filter out microscopic particles.

Table of Contents

INTRODUCTION

Contact Info

We stand behind our machines! If you have questions or need help, contact us with the information below. Before contacting, make sure you get the **serial number** and **manufacture date** from the machine ID label. This will help us help you faster.

Grizzly Technical Support
1815 W. Battlefield
Springfield, MO 65807
Phone: (570) 546-9663
Email: techsupport@grizzly.com

We want your feedback on this manual. What did you like about it? Where could it be improved? Please take a few minutes to give us feedback.

Grizzly Documentation Manager
P.O. Box 2069
Bellingham, WA 98227-2069
Email: manuals@grizzly.com

Manual Accuracy

We are proud to provide a high-quality owner's manual with your new machine!

We made every effort to be exact with the instructions, specifications, drawings, and photographs in this manual. Sometimes we make mistakes, but our policy of continuous improvement also means that **sometimes the machine you receive is slightly different than shown in the manual**.

If you find this to be the case, and the difference between the manual and machine leaves you confused or unsure about something, check our website for an updated version. We post current manuals and manual updates for free on our website at **www.grizzly.com**.

Alternatively, you can call our Technical Support for help. Before calling, make sure you write down the **Manufacture Date** and **Serial Number** from the machine ID label (see below). This information is required for us to provide proper tech support, and it helps us determine if updated documentation is available for your machine.

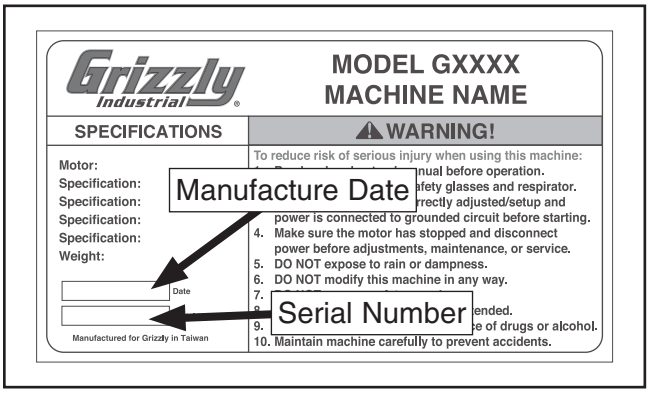

Identification

Become familiar with the names and locations of the features shown below to better understand the instructions in this manual.

WARNING

To reduce your risk of serious injury, read this entire manual BEFORE using machine.

MACHINE DATA SHEET

Customer Service #: (570) 546-9663 · To Order Call: (800) 523-4777 · Fax #: (800) 438-5901

MODEL G0852 1.5 HP QUIET CYCLONE DUST COLLECTOR

Product Dimensions:

Weight..... 247 lbs.
Width (side-to-side) x Depth (front-to-back) x Height..... 36-1/2 x 55 x 78 in.
Footprint (Length x Width)..... 28-1/2 x 47 in.

Shipping Dimensions:

Type..... Wooden Pallet w/Cardboard Box
Content..... Machine
Weight..... 280 lbs.
Length x Width x Height..... 49 x 30 x 40 in.
Must Ship Upright..... Yes

Electrical:

Power Requirement..... 120V or 240V, Single-Phase, 60 Hz
Prewired Voltage..... 120V
Full-Load Current Rating..... 15A at 120V, 7.5A at 240V
Minimum Circuit Size..... 20A at 120V, 15A at 240V
Connection Type..... Cord & Plug
Power Cord Included..... Yes
Power Cord Length..... 6 ft.
Power Cord Gauge..... 12 AWG
Plug Included..... Yes
Included Plug Type..... 5-15
Recommended Plug Type..... 6-15 for 240V
Switch Type..... ON/OFF Push-Button Switch w/Shut-Off Paddle

Motors:

Main

Horsepower..... 1.5 HP
Phase..... Single-Phase
Amps..... 15A/7.5A
Speed..... 3450 RPM
Type..... TEFC Capacitor Start/Run
Power Transfer ..... Direct Drive
Bearings..... Shielded & Permanently Lubricated
Centrifugal Switch/Contacts Type..... Internal

Main Specifications:

Operation

Dust Collector Type	Two-Stage (Cyclone)
Approved Dust Types	Wood
Filter Type	Pleated Cartridge
Airflow Performance	785 CFM @ 2.0 in. SP
Max Static Pressure (at 0 CFM)	10.8 in.
Main Inlet Size	6 in.
Inlet Adapter Included	Yes
Number of Adapter Inlets	2
Adapter Inlet Size	4 in.
Machine Collection Capacity At One Time	1 Machine
Filtration Rating	0.2 - 2 Micron
Filter Surface Area	54 sq. ft.

Bag Information

Number of Upper Bags	1 (Canister Filter)
Number of Lower Bags	1 (Dust Collection)
Upper Bag Diameter	18 in.
Upper Bag Length	23-5/8 in.
Lower Bag Diameter	17-3/4 in.
Lower Bag Length	35-1/2 in.

Canister Information

Number of Canister Filters	1
Canister Filter Diameter	17 in.
Canister Filter Length	26 in.

Impeller Information

Impeller Type	Radial Fin
Impeller Size	12-1/2 in.
Impeller Blade Thickness	3/16 in.

Construction

Upper Bag	Clear Plastic
Lower Bag	Clear Plastic
Canister	Spun-Bond Polyester
Base	Steel
Frame	Steel Sheet (14 Gauge)
Caster	Plastic
Impeller	Steel
Paint Type/Finish	Powder Coated
Blower Housing	Steel (16 Gauge)
Body	Steel (18 Gauge)

Other Specifications:

Country of Origin	Taiwan
Warranty	1 Year
Approximate Assembly & Setup Time	1 Hour
Serial Number Location	Machine ID Label
Sound Rating	78 dB
ISO 9001 Factory	Yes
Certified by a Nationally Recognized Testing Laboratory (NRTL)	Yes

Features:

Super Quiet Operation
Gentle Brush-Cleaning Mechanism Inside Canister Filter
Clear Disposable Plastic Collection Bags

SECTION 1: SAFETY

For Your Own Safety, Read Instruction Manual Before Operating This Machine

The purpose of safety symbols is to attract your attention to possible hazardous conditions. This manual uses a series of symbols and signal words intended to convey the level of importance of the safety messages. The progression of symbols is described below. Remember that safety messages by themselves do not eliminate danger and are not a substitute for proper accident prevention measures. Always use common sense and good judgment.

DANGER	**Indicates an imminently hazardous situation which, if not avoided, WILL result in death or serious injury.**
WARNING	**Indicates a potentially hazardous situation which, if not avoided, COULD result in death or serious injury.**
CAUTION	**Indicates a potentially hazardous situation which, if not avoided, MAY result in minor or moderate injury. It may also be used to alert against unsafe practices.**
NOTICE	**Alerts the user to useful information about proper operation of the machine to avoid machine damage.**

Safety Instructions for Machinery

WARNING

OWNER'S MANUAL. Read and understand this owner's manual BEFORE using machine.

TRAINED OPERATORS ONLY. Untrained operators have a higher risk of being hurt or killed. Only allow trained/supervised people to use this machine. When machine is not being used, disconnect power, remove switch keys, or lock-out machine to prevent unauthorized use—especially around children. Make your workshop kid proof!

DANGEROUS ENVIRONMENTS. Do not use machinery in areas that are wet, cluttered, or have poor lighting. Operating machinery in these areas greatly increases the risk of accidents and injury.

MENTAL ALERTNESS REQUIRED. Full mental alertness is required for safe operation of machinery. Never operate under the influence of drugs or alcohol, when tired, or when distracted.

ELECTRICAL EQUIPMENT INJURY RISKS. You can be shocked, burned, or killed by touching live electrical components or improperly grounded machinery. To reduce this risk, only allow qualified service personnel to do electrical installation or repair work, and always disconnect power before accessing or exposing electrical equipment.

DISCONNECT POWER FIRST. Always disconnect machine from power supply BEFORE making adjustments, changing tooling, or servicing machine. This prevents an injury risk from unintended startup or contact with live electrical components.

EYE PROTECTION. Always wear ANSI-approved safety glasses or a face shield when operating or observing machinery to reduce the risk of eye injury or blindness from flying particles. Everyday eyeglasses are NOT approved safety glasses.

⚠WARNING

WEARING PROPER APPAREL. Do not wear clothing, apparel or jewelry that can become entangled in moving parts. Always tie back or cover long hair. Wear non-slip footwear to reduce risk of slipping and losing control or accidentally contacting cutting tool or moving parts.

HAZARDOUS DUST. Dust created by machinery operations may cause cancer, birth defects, or long-term respiratory damage. Be aware of dust hazards associated with each workpiece material. Always wear a NIOSH-approved respirator to reduce your risk.

HEARING PROTECTION. Always wear hearing protection when operating or observing loud machinery. Extended exposure to this noise without hearing protection can cause permanent hearing loss.

REMOVE ADJUSTING TOOLS. Tools left on machinery can become dangerous projectiles upon startup. Never leave chuck keys, wrenches, or any other tools on machine. Always verify removal before starting!

USE CORRECT TOOL FOR THE JOB. Only use this tool for its intended purpose—do not force it or an attachment to do a job for which it was not designed. Never make unapproved modifications—modifying tool or using it differently than intended may result in malfunction or mechanical failure that can lead to personal injury or death!

AWKWARD POSITIONS. Keep proper footing and balance at all times when operating machine. Do not overreach! Avoid awkward hand positions that make workpiece control difficult or increase the risk of accidental injury.

CHILDREN & BYSTANDERS. Keep children and bystanders at a safe distance from the work area. Stop using machine if they become a distraction.

GUARDS & COVERS. Guards and covers reduce accidental contact with moving parts or flying debris. Make sure they are properly installed, undamaged, and working correctly BEFORE operating machine.

FORCING MACHINERY. Do not force machine. It will do the job safer and better at the rate for which it was designed.

NEVER STAND ON MACHINE. Serious injury may occur if machine is tipped or if the cutting tool is unintentionally contacted.

STABLE MACHINE. Unexpected movement during operation greatly increases risk of injury or loss of control. Before starting, verify machine is stable and mobile base (if used) is locked.

USE RECOMMENDED ACCESSORIES. Consult this owner's manual or the manufacturer for recommended accessories. Using improper accessories will increase the risk of serious injury.

UNATTENDED OPERATION. To reduce the risk of accidental injury, turn machine ***OFF*** and ensure all moving parts completely stop before walking away. Never leave machine running while unattended.

MAINTAIN WITH CARE. Follow all maintenance instructions and lubrication schedules to keep machine in good working condition. A machine that is improperly maintained could malfunction, leading to serious personal injury or death.

DAMAGED PARTS. Regularly inspect machine for damaged, loose, or mis-adjusted parts—or any condition that could affect safe operation. Immediately repair/replace BEFORE operating machine. For your own safety, DO NOT operate machine with damaged parts!

MAINTAIN POWER CORDS. When disconnecting cord-connected machines from power, grab and pull the plug—NOT the cord. Pulling the cord may damage the wires inside. Do not handle cord/plug with wet hands. Avoid cord damage by keeping it away from heated surfaces, high traffic areas, harsh chemicals, and wet/damp locations.

EXPERIENCING DIFFICULTIES. If at any time you experience difficulties performing the intended operation, stop using the machine! Contact our Technical Support at (570) 546-9663.

Additional Safety for Dust Collectors

⚠WARNING

Long-term respiratory damage can occur from using dust collectors without proper use of a respirator. Fire or explosions can result in smoke inhalation, serious burns, or death—if machine is used to collect incorrect materials, is operated near potential explosion sources, or ducting is improperly grounded. Entanglement, amputation, or death can occur if hair, clothing, or fingers are pulled into the inlet. To reduce the risk of these hazards, operator and bystanders MUST completely heed the hazards and warnings below.

INTENDED USE. Collecting the wrong materials can result in serious inhalation hazards, fire, explosions, or machine damage. This machine is ONLY designed to collect wood dust and chips from woodworking machines. DO NOT use it to collect silica, polyurethane, toxic fumes, metal dust or shavings, lead paint, drywall, asbestos, biohazards, explosive dusts, flammable or combustible liquids or fumes, nor burning or smoking material.

WEAR A RESPIRATOR. Fine dust that is too small to be caught in filter will be blown into ambient air. Always wear a NIOSH-approved respirator during operation and for a short time after to reduce your risk of permanent respiratory damage. Never collect dust from any hazardous material.

IMPELLER HAZARDS. To reduce risk of entanglement or contact with impeller, DO NOT place hands, hair, clothing, or tools in or near open dust collection inlet during operation, and keep small animals and children away. The powerful suction could easily pull them into impeller.

HAZARDOUS DUST. Dust exposure created while using machinery may cause cancer, birth defects, or long-term respiratory damage. Be aware of dust hazards associated with each workpiece material, and always wear a NIOSH-approved respirator.

EMPTYING DUST. When emptying bag or drum, wear respirator and safety glasses. Empty dust away from ignition sources and into approved container.

OPERATING LOCATION. To reduce respiratory exposure to fine dust, locate permanently installed dust collectors away from working area or in another room. DO NOT place dust collector where it can be exposed to rain or moisture, which creates a shock hazard and will reduce life of machine.

POWER DISCONNECT. Turn machine ***OFF***, disconnect from power supply, and allow impeller to completely stop before leaving machine unattended, or doing any maintenance or service.

REGULAR CLEANING. To reduce risk of starting a fire, regularly check/empty collection bags or drum to avoid buildup of fine dust, which can increase risk of fire. Regularly clean surrounding area where machine is operated—excessive dust buildup on overhead lights, heaters, electrical panels, or other heat sources will increase risk of fire.

SUSPENDED DUST PARTICLES. To reduce risk of death or injury caused by explosions or fires, DO NOT operate in areas where these risks are high, including spaces near pilot lights, open flames, or other ignition sources.

AVOIDING SPARKS. To reduce risk of fire, avoid collecting any metal objects or stones. These can possibly produce sparks when they strike impeller, which can smolder in wood dust for a long time before a fire is detected. If you accidentally cut into wood containing metal, immediately turn ***OFF*** dust collector, disconnect from power, and wait for impeller to stop. Then empty bag or drum into approved airtight metal container.

FIRE SUPPRESSION. Only operate dust collector in locations that contain fire suppression system or have fire extinguisher nearby.

STATIC ELECTRICITY. To reduce risk of fire or explosions caused by sparks from static electricity, ground all ducting using grounding wire.

DUST ALLERGIES. Dust from certain woods will cause an allergic reaction. Make sure you know what type of wood dust you will be exposed to in case of an allergic reaction.

SECTION 2: POWER SUPPLY

Availability

Before installing the machine, consider the availability and proximity of the required power supply circuit. If an existing circuit does not meet the requirements for this machine, a new circuit must be installed. To minimize the risk of electrocution, fire, or equipment damage, installation work and electrical wiring must be done by an electrician or qualified service personnel in accordance with all applicable codes and standards.

⚠WARNING

Electrocution, fire, shock, or equipment damage may occur if machine is not properly grounded and connected to power supply.

Full-Load Current Rating

The full-load current rating is the amperage a machine draws at 100% of the rated output power. On machines with multiple motors, this is the amperage drawn by the largest motor or sum of all motors and electrical devices that might operate at one time during normal operations.

Full-Load Current Rating at 120V ..... 15 Amps
Full-Load Current Rating at 240V .... 7.5 Amps

The full-load current is not the maximum amount of amps that the machine will draw. If the machine is overloaded, it will draw additional amps beyond the full-load rating.

If the machine is overloaded for a sufficient length of time, damage, overheating, or fire may result—especially if connected to an undersized circuit. To reduce the risk of these hazards, avoid overloading the machine during operation and make sure it is connected to a power supply circuit that meets the specified circuit requirements.

Circuit Information

A power supply circuit includes all electrical equipment between the breaker box or fuse panel in the building and the machine. The power supply circuit used for this machine must be sized to safely handle the full-load current drawn from the machine for an extended period of time. (If this machine is connected to a circuit protected by fuses, use a time delay fuse marked D.)

⚠CAUTION

For your own safety and protection of property, consult an electrician if you are unsure about wiring practices or electrical codes in your area.

Note: *Circuit requirements in this manual apply to a dedicated circuit—where only one machine will be running on the circuit at a time. If machine will be connected to a shared circuit where multiple machines may be running at the same time, consult an electrician or qualified service personnel to ensure circuit is properly sized for safe operation.*

Circuit Requirements for 120V

This machine is prewired to operate on a power supply circuit that has a verified ground and meets the following requirements:

Nominal Voltage 110V, 115V, 120V
Cycle .....60 Hz
Phase ..... Single-Phase
Power Supply Circuit ..... 20 Amps
Plug/Receptacle ..... NEMA 5-15

Circuit Requirements for 240V

This machine can be converted to operate on a power supply circuit that has a verified ground and meets the requirements listed below. (Refer to **Voltage Conversion** instructions for details.)

Nominal Voltage 208V, 220V, 230V, 240V
Cycle .....60 Hz
Phase ..... Single-Phase
Power Supply Circuit ..... 15 Amps
Plug/Receptacle ..... NEMA 6-15

Grounding Requirements

This machine MUST be grounded. In the event of certain malfunctions or breakdowns, grounding reduces the risk of electric shock by providing a path of least resistance for electric current.

For 120V operation: This machine is equipped with a power cord that has an equipment-grounding wire and a grounding plug (see following figure). The plug must only be inserted into a matching receptacle (outlet) that is properly installed and grounded in accordance with all local codes and ordinances.

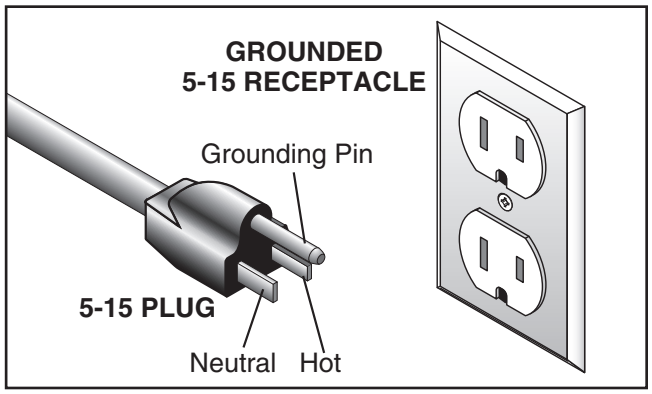

Figure 1. Typical 5-15 plug and receptacle.

⚠CAUTION

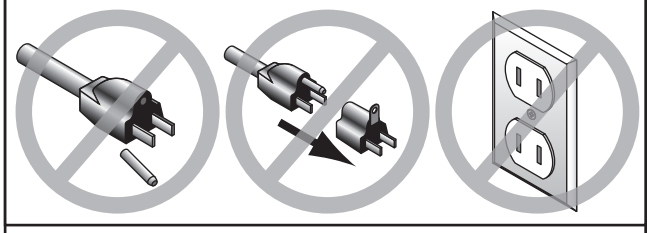

SHOCK HAZARD!

Two-prong outlets do not meet the grounding requirements for this machine. Do not modify or use an adapter on the plug provided—if it will not fit the outlet, have a qualified electrician install the proper outlet with a verified ground.

For 240V operation: The plug specified under "Circuit Requirements for 240V" on the previous page has a grounding prong that must be attached to the equipment-grounding wire on the included power cord. The plug must only be inserted into a matching receptacle (see following figure) that is properly installed and grounded in accordance with all local codes and ordinances.

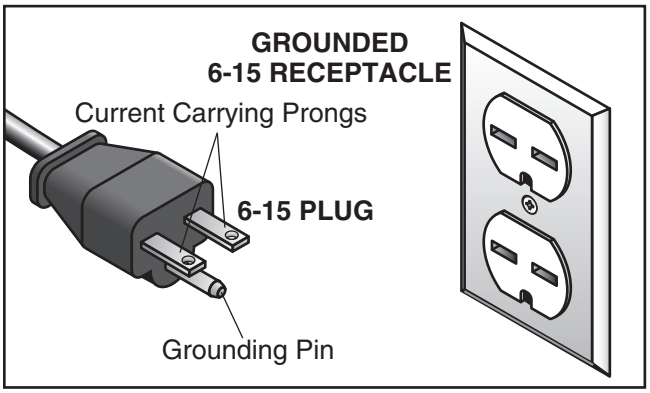

Figure 2. Typical 6-15 plug and receptacle.

Improper connection of the equipment-grounding wire can result in a risk of electric shock. The wire with green insulation (with or without yellow stripes) is the equipment-grounding wire. If repair or replacement of the power cord or plug is necessary, do not connect the equipment-grounding wire to a live (current carrying) terminal.

Check with a qualified electrician or service personnel if you do not understand these grounding requirements, or if you are in doubt about whether the tool is properly grounded. If you ever notice that a cord or plug is damaged or worn, disconnect it from power, and immediately replace it with a new one.

Extension Cords

We do not recommend using an extension cord with this machine. If you must use an extension cord, only use it if absolutely necessary and only on a temporary basis.

Extension cords cause voltage drop, which can damage electrical components and shorten motor life. Voltage drop increases as the extension cord size gets longer and the gauge size gets smaller (higher gauge numbers indicate smaller sizes).

Any extension cord used with this machine must be in good condition and contain a ground wire and matching plug/receptacle. Additionally, it must meet the following size requirements:

Minimum Gauge Size .....12 AWG
Maximum Length (Shorter is Better).....50 ft.

Converting Voltage to 240V

For your own safety, and to maintain the warranty for the machine, the voltage conversion MUST be performed by an electrician or qualified service personnel.

The voltage conversion procedure consists of installing the correct plug and rewiring the motor.

A wiring diagram is provided on **Page 42** for your reference.

IMPORTANT: If the diagram included on the motor conflicts with the one on **Page 42**, the motor may have changed since the manual was printed. Use the diagram included on the motor instead.

Items Needed	Qty
• Phillips Head Screwdriver #2	1
• Electrical Tape	As Needed
• Wire Nut (14 AWG x 3)	1
• Plug 6-15	1
• Wire Cutters/Stripper	1

To convert Model G0852 to 240V:

1. DISCONNECT MACHINE FROM POWER!

2. Cut 120V 5-15 plug from power cord.

3. Remove screw that secures junction box cover to motor (see **Figure 3**).

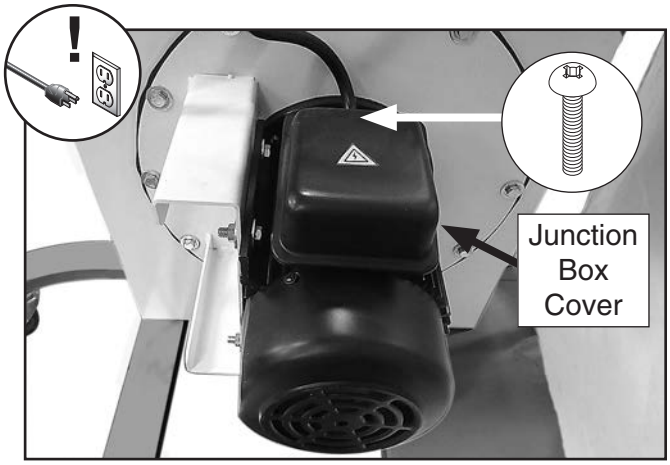

Figure 3. Motor and junction box location.

4. Remove wire nuts indicated in **Figure 4**.

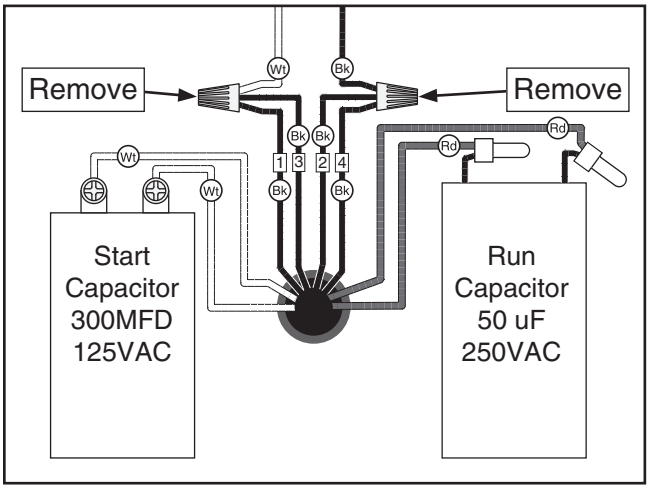

Figure 4. Motor wires at 120V.

5. Use wire nuts to connect wires, as indicated in **Figure 5**. Twist wire nuts onto their respective wires and wrap them with electrical tape so they will not come loose from vibration of motor operation.

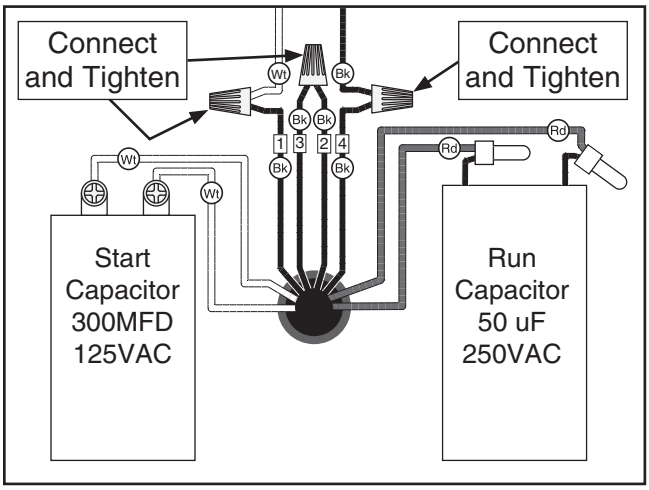

Figure 5. Motor wires repositioned for 240V.

6. Install a NEMA 6-15 plug, according to manufacturer's instructions included with plug. If no instructions were included, use wiring diagram on **Page 42**.

SECTION 3: SETUP

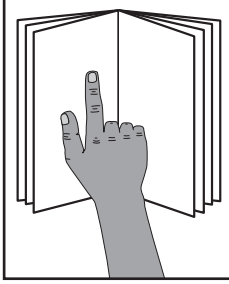

⚠WARNING

This machine presents serious injury hazards to untrained users. Read through this entire manual to become familiar with the controls and operations before starting the machine!

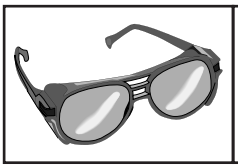

⚠WARNING

Wear safety glasses during the entire setup process!

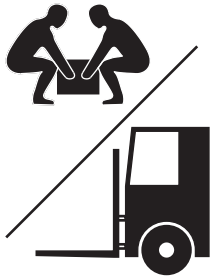

⚠WARNING

HEAVY LIFT!

Straining or crushing injury may occur from improperly lifting machine or some of its parts. To reduce this risk, get help from other people and use a forklift (or other lifting equipment) rated for weight of this machine.

⚠WARNING

Serious injury could occur if you connect machine to power before completing setup process. DO NOT connect to power until instructed later in this manual.

Needed for Setup

The following items are needed, but not included, for the setup/assembly of this machine.

Description	Qty
An Assistant	1
Safety Glasses	1 Pair per Person
Open-End Wrenches 12mm	2
Open-End Wrenches 13mm	2
Phillips Screwdriver #2	1

Unpacking

This machine was carefully packaged for safe transport. When unpacking, separate all enclosed items from packaging materials and inspect them for shipping damage. ***If items are damaged, please call us immediately at (570) 546-9663.***

IMPORTANT: Save all packaging materials until you are completely satisfied with the machine and have resolved any issues between Grizzly or the shipping agent. *You MUST have the original packaging to file a freight claim. It is also extremely helpful if you need to return your machine later.*

⚠WARNING

SUFFOCATION HAZARD!

Keep children and pets away from plastic bags or packing materials shipped with this machine.

Inventory

The following is a list of items shipped with your machine. Before beginning setup, lay these items out and inventory them.

If any non-proprietary parts are missing (e.g. a nut or a washer), we will gladly replace them; or for the sake of expediency, replacements can be obtained at your local hardware store.

Main Inventory Components (Figure 6)	Qty
A. Canister Filter Assembly	1
B. Collection Bag Lid	1
C. Cyclone Funnel	1
D. Upper Cover	1
E. Base Stand	1
F. Lower Legs (Rear and Right Front)	3
G. Upper Legs	4
H. Front Lower Leg (Left)	1
I. Leg Braces	2
J. Collection Bag	1
K. Filter Bag	1
L. Exhaust Port	1
M. Inlet Adapter, 6" x 4" x 4"	1
N. Vacuum Hose 6" x 33"	1
O. Bag Clamp 19"	1
P. Bag Clamp 17¾"	1
Q. Hose Clamps 6½"	2
R. Motor/Impeller Housing w/Switch Box	1
S. Dust Intake Port	1
T. Filter Brush Handle Assembly	1
U. Swivel Casters, Locking	2
V. Swivel Casters	2
W. Cyclone Funnel Gasket	1
X. Upper Cover Gasket	1
Y. Exhaust Port Gasket	1
Z. Canister Filter Gasket	1
AA. Dust Intake Port Gasket	1
AB. Collection Lid Gasket	1

Hardware/Fasteners (Figure 7)	Qty
AC. Hex Bolts 5/16"-18 x ¾"	73
AD. Hex Bolts 5/16"-18 x 1"	12
AE. Hex Bolts 5/16"-18 x 2½"	2
AF. Hex Bolts ¼"-20 x ¾"	6
AG. Brush Handle Spindle Block	1
AH. Flat Washers 5/16"	15
AI. Fender Washers 5/16"	84
AJ. Hex Nuts 5/16"-18	12
AK. Fender Washers ¼"	6
AL. Phillips Head Screw 10-24 x ½"	1

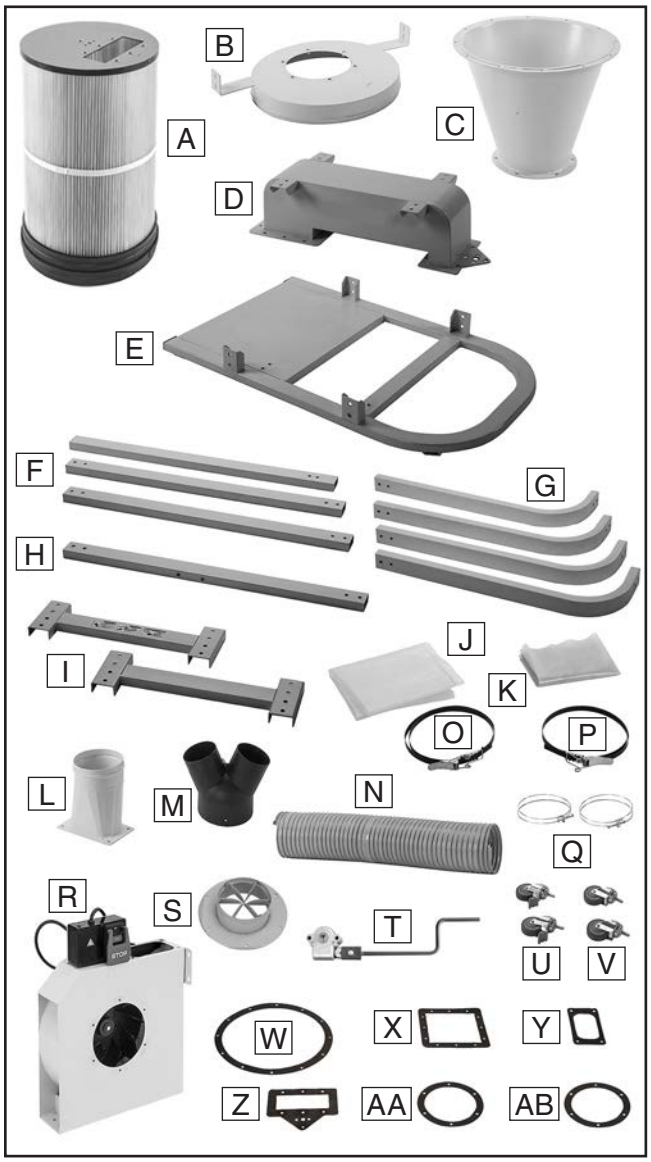

Figure 6. Main inventory components.

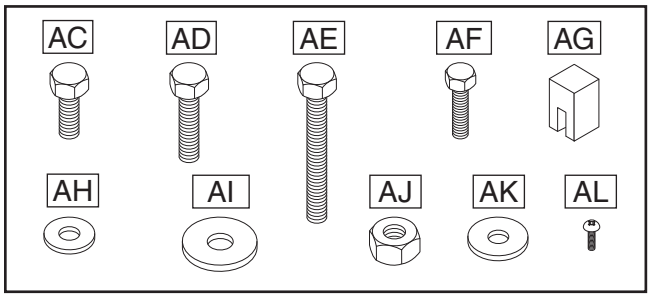

Figure 7. Hardware/fasteners.

NOTICE

If you cannot find an item on this list, carefully check around/inside the machine and packaging materials. Often, these items get lost in packaging materials while unpacking or they are pre-installed at the factory.

Site Considerations

Weight Load

Refer to the **Machine Data Sheet** for the weight of your machine. Make sure that the surface upon which the machine is placed will bear the weight of the machine, additional equipment that may be installed on the machine, and the heaviest workpiece that will be used. Additionally, consider the weight of the operator and any dynamic loading that may occur when operating the machine.

Space Allocation

Consider the largest size of workpiece that will be processed through this machine and provide enough space around the machine for adequate operator material handling or the installation of auxiliary equipment. With permanent installations, leave enough space around the machine to open or remove doors/covers as required by the maintenance and service described in this manual. **See below for required space allocation.**

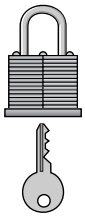

⚠CAUTION

Children or untrained people may be seriously injured by this machine. Only install in an access restricted location.

Physical Environment

The physical environment where the machine is operated is important for safe operation and longevity of machine components. For best results, operate this machine in a dry environment that is free from excessive moisture, hazardous chemicals, airborne abrasives, or extreme conditions. Extreme conditions for this type of machinery are generally those where the ambient temperature range exceeds 41°–104°F; the relative humidity range exceeds 20%–95% (non-condensing); or the environment is subject to vibration, shocks, or bumps.

Electrical Installation

Place this machine near an existing power source. Make sure all power cords are protected from traffic, material handling, moisture, chemicals, or other hazards. Make sure to leave enough space around machine to disconnect power supply or apply a lockout/tagout device, if required.

Lighting

Lighting around the machine must be adequate enough that operations can be performed safely. Shadows, glare, or strobe effects that may distract or impede the operator must be eliminated.

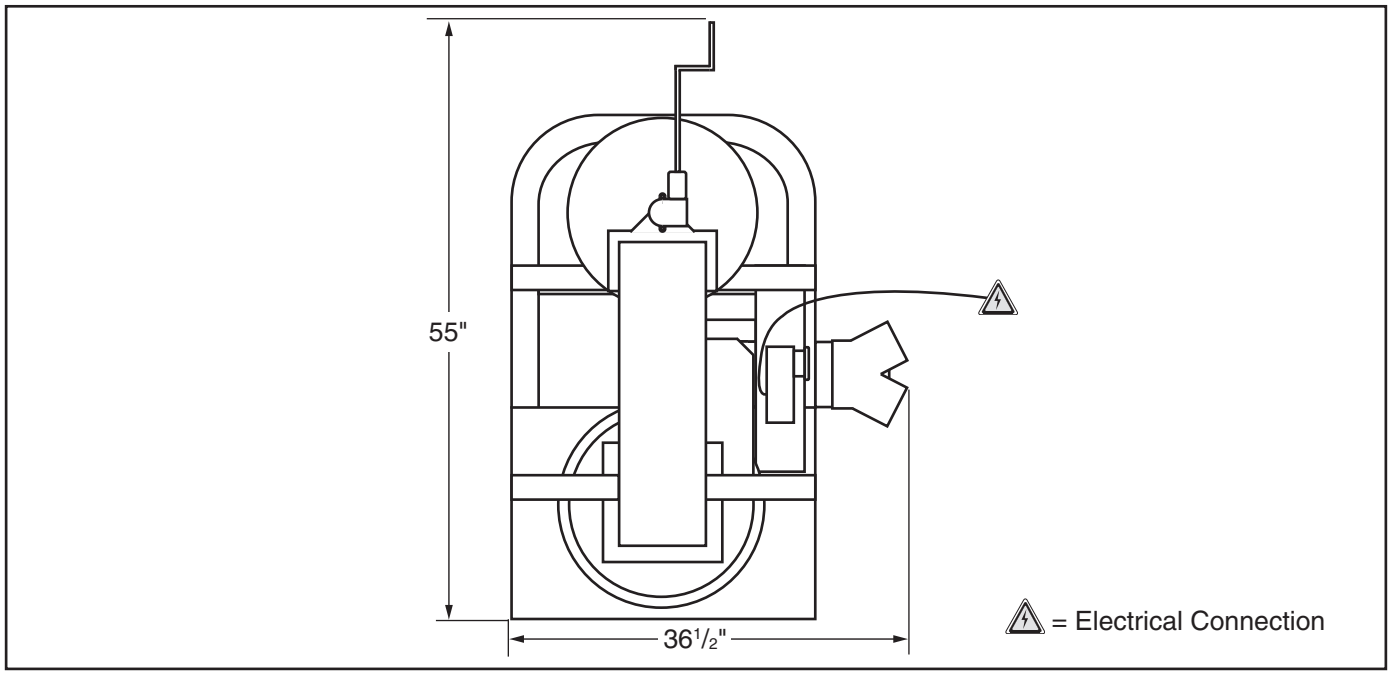

Figure 8. Minimum working clearances.

Assembly

The machine must be fully assembled before it can be operated. Before beginning the assembly process, refer to **Needed for Setup** and gather all listed items. To ensure the assembly process goes smoothly, first clean any parts that are covered or coated in heavy-duty rust preventative (if applicable).

To assemble machine:

1. Thread (2) 3" locking swivel casters into base stand, then tighten hex head on caster threads (see **Figure 9**).

Tip: *Applying thread-locking fluid to caster threads ensures life-long tight mounting.*

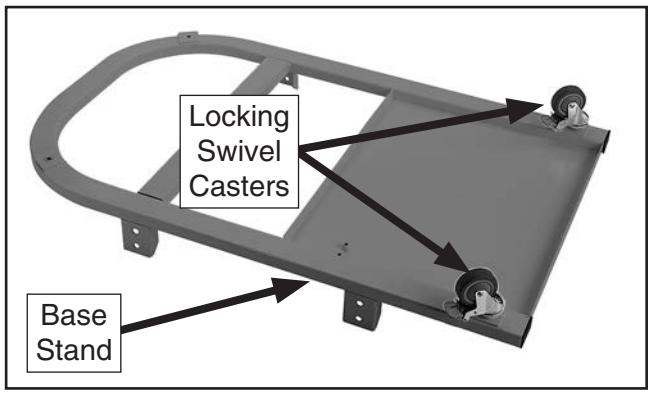

Figure 9. Locking swivel casters installed.

2. Thread (2) 3" swivel casters into base stand, then tighten hex head on caster threads (see **Figure 10**).

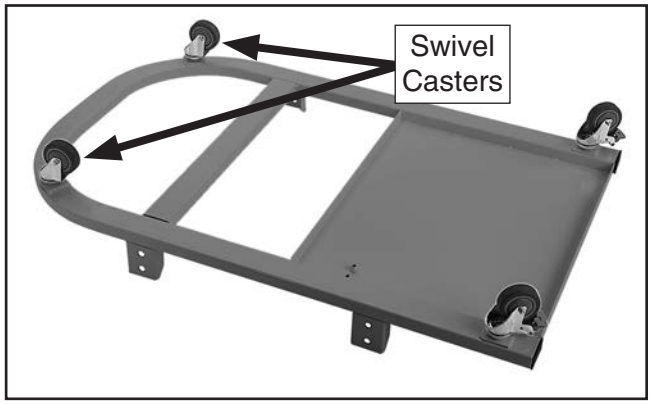

Figure 10. Swivel casters installed.

3. With bolt holes on front edge facing forward, attach lower left front leg to base stand and finger-tighten with (2) 5/16"-18 x 3/4" hex bolts and (2) 5/16" fender washers (see **Figure 11**).

Note: *Lower left front leg has (2) extra threaded 5/16"-18 bolt holes on front edge.*

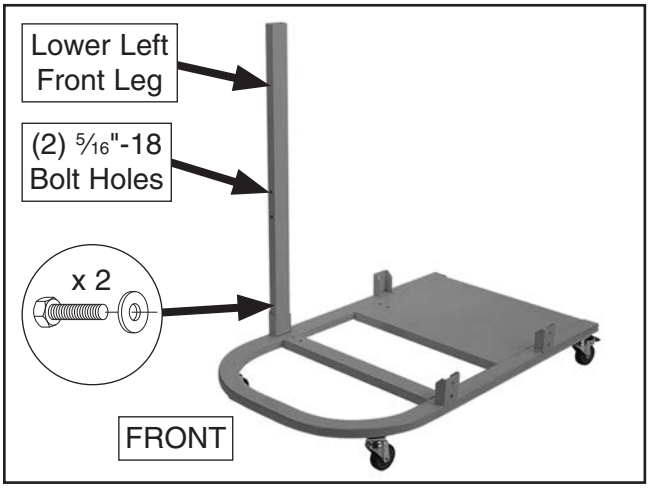

Figure 11. Lower left front leg installed.

4. Attach lower right front leg to base stand and finger-tighten with (2) 5/16"-18 x 3/4" hex bolts and (2) 5/16" fender washers (see **Figure 12**).

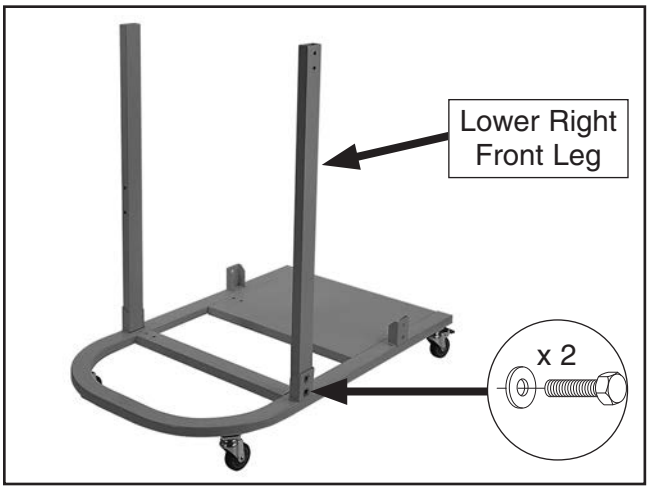

Figure 12. Lower right front leg installed.

5. Attach (2) lower rear legs to base stand and finger-tighten each one using (2) 5/16"-18 x 3/4" hex bolts and (2) 5/16" fender washers (see **Figure 13**).

Note: *Each lower rear leg has (2) extra threaded 5/16"-18 bolt holes on inner edges.*

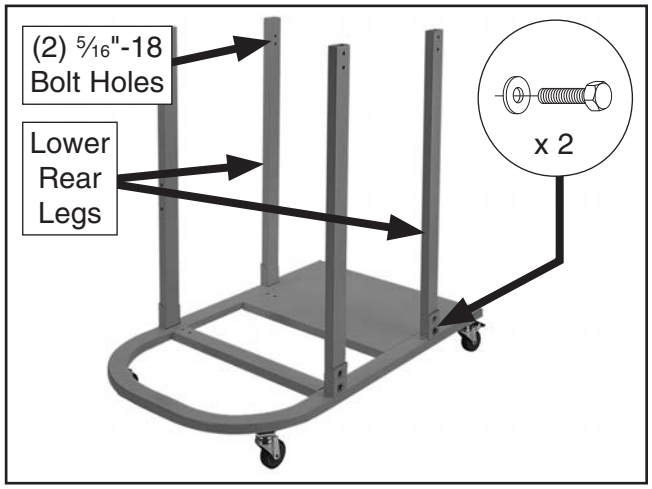

Figure 13. Lower rear legs installed.

6. Attach each leg brace to lower legs and finger-tighten with (4) 5/16"-18 x 3/4" hex bolts and (4) 5/16" fender washers (see **Figure 14**).

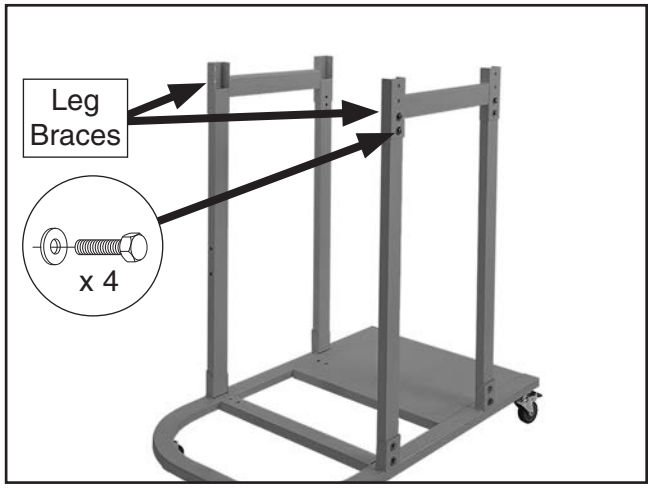

Figure 14. Leg braces installed.

7. Attach (2) upper legs to each brace (see **Figure 15**), then finger-tighten each upper leg with (2) 5/16"-18 x 3/4" hex bolts and (2) 5/16" fender washers.

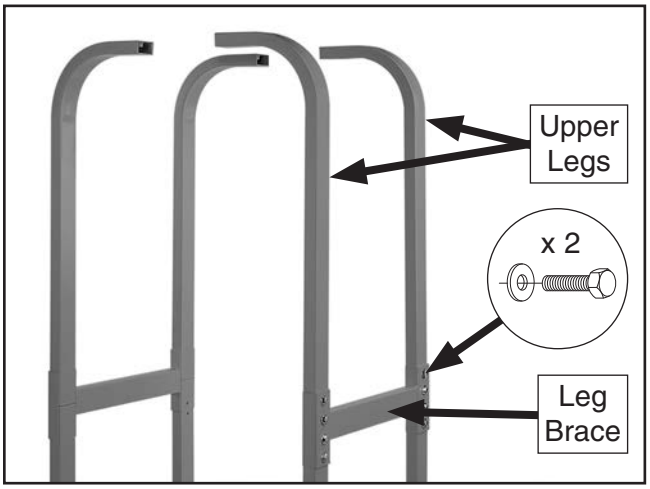

Figure 15. Upper legs installed.

8. Place square gasket on intake barrel (see **Figure 16**, inset), then attach upper cover to intake barrel using (12) 5/16"-18 x 3/4" hex bolts and (12) 5/16" fender washers (see **Figure 16**). Tighten in star pattern.

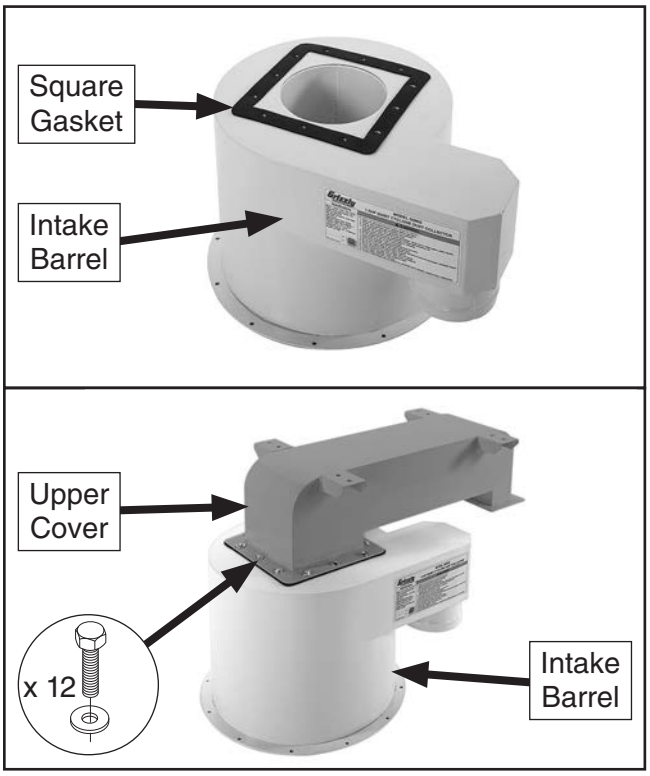

Figure 16. Upper cover attached to intake barrel.

9. With help from an assistant, lift upper cover and intake barrel and attach to upper legs with (8) 5/16"-18 x 3/4" hex bolts and (8) 5/16" fender washers (see **Figure 17**).

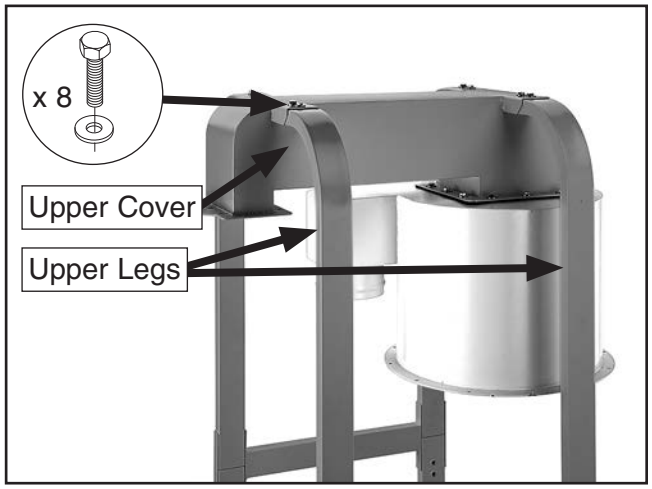

Figure 17. Upper cover attached to upper legs.

10. Final-tighten all fasteners installed in **Steps 3–9.**

11. Place rubber gasket on collection bag lid, then attach to cyclone funnel with (8) 5/16"-18 x 3/4" hex bolts and (8) 5/16" flat washers (see **Figure 18**). Finger-tighten for now.

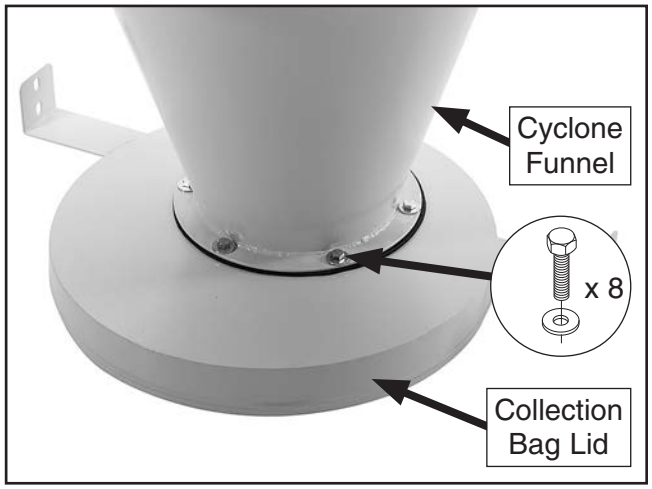

Figure 18. Collection bag lid mounted to cyclone funnel.

12. Place rubber gasket on cyclone funnel (see **Figure 19**, inset), then attach cyclone funnel to intake barrel using (12) 5/16"-18 x 1" hex bolts, (24) 5/16" fender washers, and (12) 5/16"-18 hex nuts (see **Figure 19**). Finger-tighten for now.

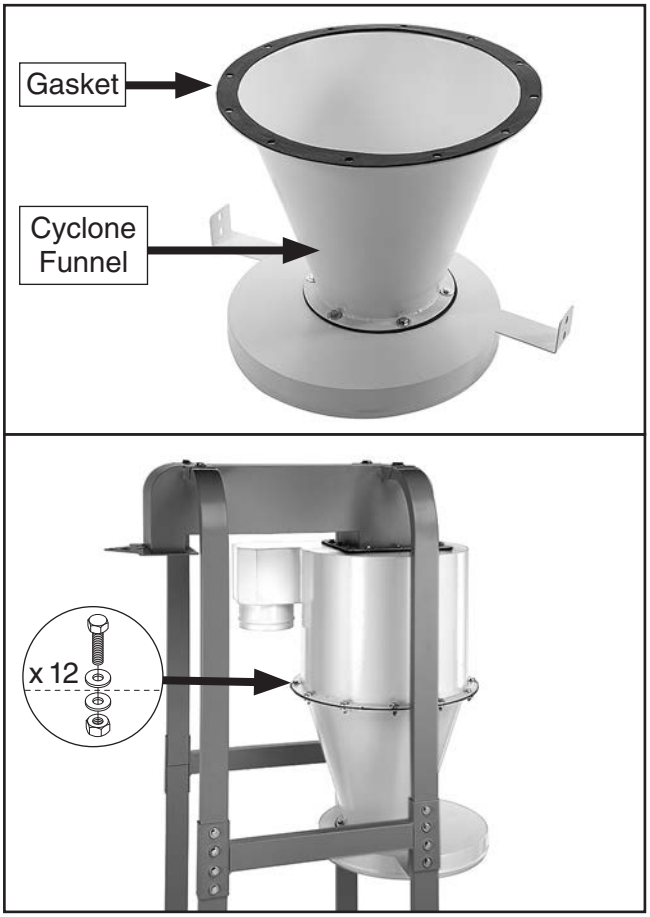

Figure 19. Cyclone funnel attached to intake barrel.

13. Attach collection bag lid to lower legs using (4) 5/16"-18 x 3/4" hex bolts and (4) 5/16" fender washers (see **Figure 20**).

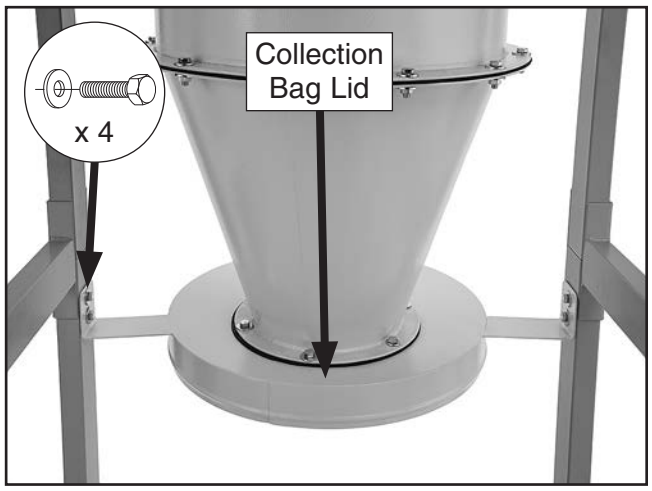

Figure 20. Collection bag lid attached to lower legs.

14. Final-tighten all fasteners installed in **Steps 11–13** in a star pattern.

15. Place rubber gasket on 6" dust intake port, then attach to motor/impeller housing using (6) 1/4"-20 x 3/4" hex bolts and (6) 1/4" flat washers (see **Figure 21**). Tighten in star pattern.

16. Place rubber gasket between exhaust port and motor/impeller housing, then attach using (4) 5/16"-18 x 3/4" hex bolts and (4) 5/16" fender washers (see **Figure 21**).

17. Attach switch box to motor/impeller housing using (2) 5/16"-18 x 3/4" hex bolts and (2) 5/16" fender washers (see **Figure 21**).

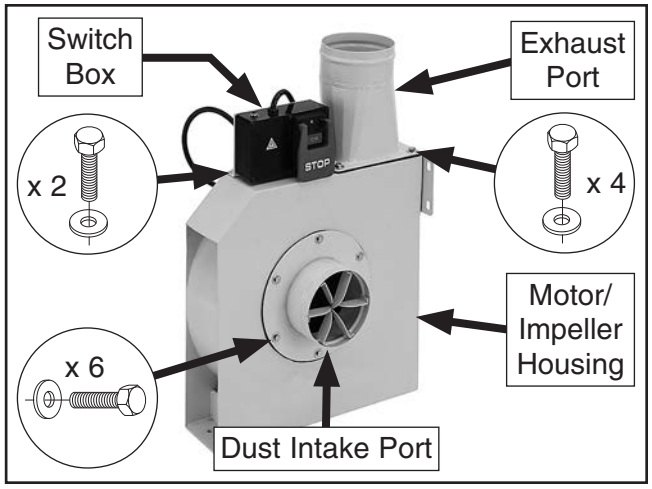

Figure 21. Dust intake port, exhaust port, and switch box attached to motor/impeller housing.

18. Attach motor/impeller housing using (4) 5/16"-18 x 3/4" hex bolts and (4) 5/16" fender washers on base stand, and (2) 5/16"-18 x 3/4" hex bolts and (2) 5/16" fender washers on lower left front leg (see **Figure 22**).

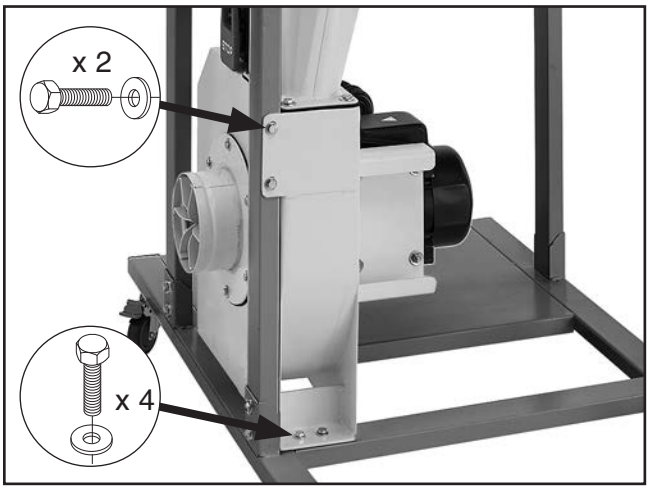

Figure 22. Motor/impeller housing attached to base stand and lower left front leg.

19. Place 6½" hose clamp on each end of 6 X 33" vacuum hose, then connect hose to motor/impeller housing exhaust port and intake barrel (see **Figure 23**). Tighten clamps to secure.

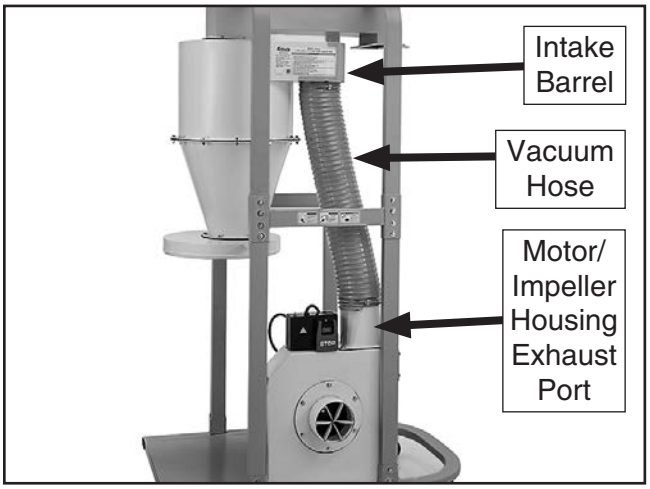

Figure 23. 6" vacuum hose attached to intake barrel and impeller housing exhaust port.

20. Place rubber gasket on top of canister filter assembly, then attach canister filter to bottom of upper cover where shown in **Figure 24** (inset) using (5) 5/16"-18 x 3/4" hex bolts and (5) 5/16" flat washers (see **Figure 24**).

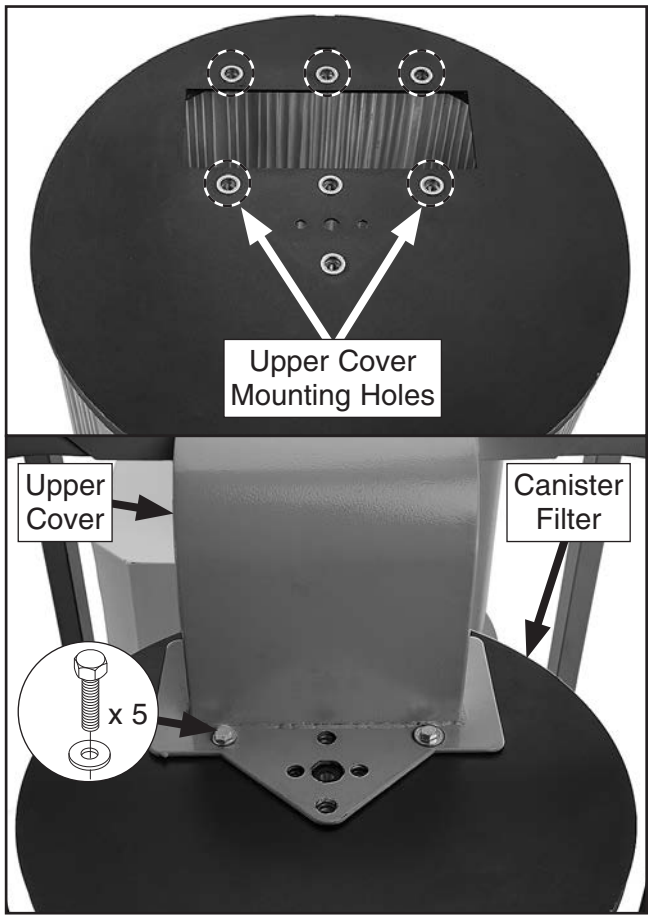

Figure 24. Canister filter mounted to upper cover.

21. Place brush handle spindle block over canister filter brush spindle, as shown in **Figure 25**.

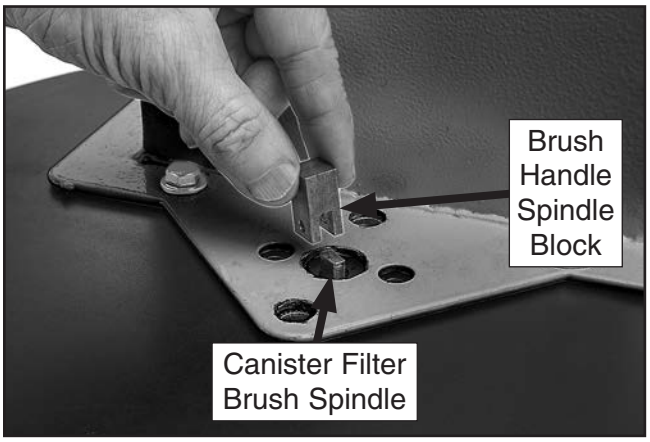

Figure 25. Attaching brush handle spindle block to canister filter brush spindle.

22. Install filter brush handle assembly (see **Figure 26**, inset) over spindle block and upper cover, then secure with (2) 5/16"-18 x 2½" hex bolts and (2) 5/16" flat washers (see **Figure 26**).

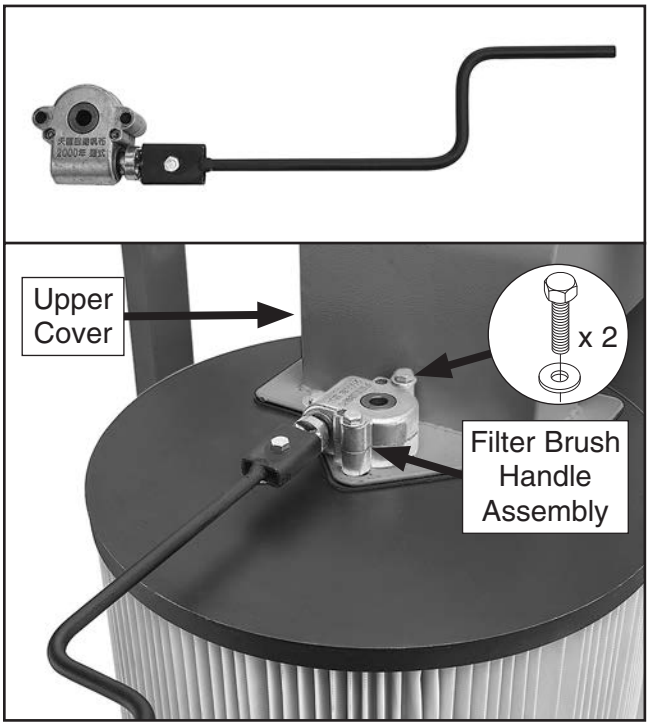

Figure 26. Filter brush handle assembly installed on canister filter.

23. Place 18" x 23⅝" filter bag around bottom of canister filter and secure with 19" metal clamp (see **Figure 27**).

Note: *Place clamp over foam gasket on canister filter to prevent dust leaks.*

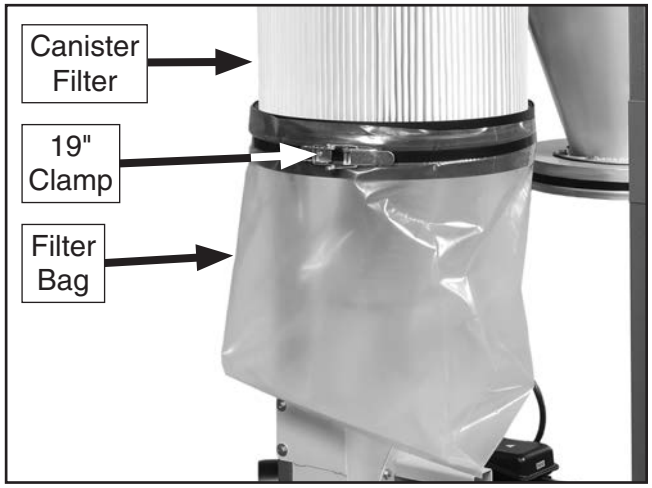

Figure 27. Filter bag attached to canister filter.

24. Place 17¾" x 35½" collection bag around collection bag lid and secure with 17¾" metal clamp (see **Figure 28**).

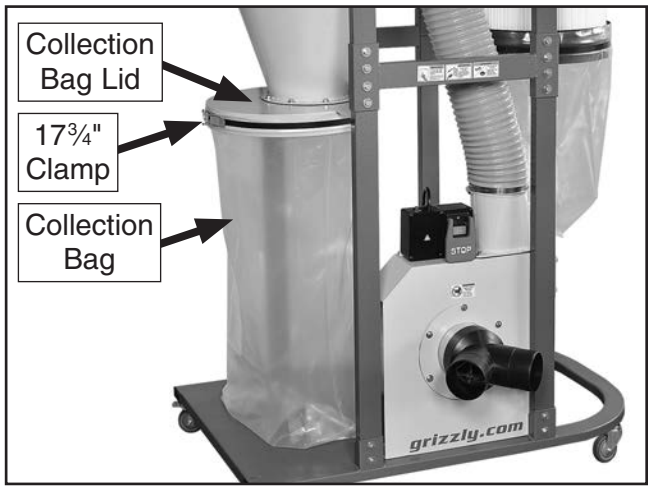

Figure 28. Collection bag attached to collection bag lid.

25. Attach 6" x 4" x 4" adapter to dust intake port on motor/impeller housing with (1) 10-24 x ½" Phillips head screw (see **Figure 29**).

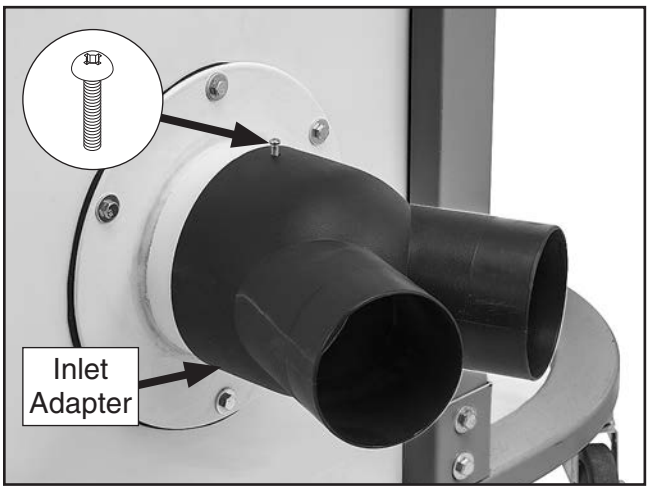

Figure 29. Adapter attached to dust intake port.

Test Run

Once assembly is complete, test run the machine to ensure it is properly connected to power and safety components are functioning correctly.

If you find an unusual problem during the test run, immediately stop the machine, disconnect it from power, and fix the problem BEFORE operating the machine again. The **Troubleshooting** table in the **SERVICE** section of this manual can help.

The Test Run consists of verifying the following: 1) The main motor powers up and runs correctly, and 2) the main motor shuts down correctly.

⚠WARNING

Serious injury or death can result from using this machine BEFORE understanding its controls and related safety information. DO NOT operate, or allow others to operate, machine until the information is understood.

⚠WARNING

DO NOT start machine until all preceding setup instructions have been performed. Operating an improperly set up machine may result in malfunction or unexpected results that can lead to serious injury, death, or machine/property damage.

To test run machine:

1. Clear all setup tools away from machine and connect to power source.

2. Lock casters so machine will not move.

3. To prevent tripping circuit breaker or supply fuse, connect machine to dust-collection system and restrict airflow by partially closing blast gates to limit motor amperage draw during test run.

   Note: *If a dust-collection system is not available, restrict airflow by blocking one 4" port on the dust inlet adapter with a cap or a piece of wood.*

4. Stand away from intake port, then press ON button on switch box (see **Figure 30**) to turn dust-collection motor ***ON***.

5. Motor should run smoothly with little or no vibration or rubbing noises. Press STOP paddle to turn dust-collection motor ***OFF*** (see **Figure 30**).

   — If you suspect any problems, immediately turn machine ***OFF*** and disconnect it from power. Refer to **Troubleshooting** on **Page 37**. If you cannot resolve the problem, contact our Tech Support at (570) 546-9663 for assistance.

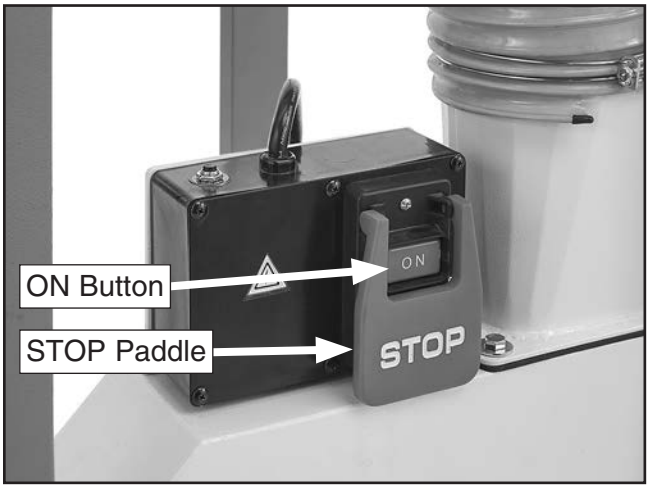

Figure 30. Dust-collection motor ON button and STOP paddle.

SECTION 4: DESIGNING A SYSTEM

General

⚠CAUTION

Always guard against static electrical buildup by grounding all dust collection lines.

The Model G0852 works great as a central system for a small shop or a dedicated dust collector for a medium-sized production machine.

When installing the dust collector be sure to put it in an out of the way location such as a corner or separate room. The dust collector is capable of collecting dust from one machine at a time. Grizzly offers a complete line of dust collection accessories for setting up a stationary system. Additionally, Grizzly offers a complete guide book entitled *Dust Collection Basics.*

Whatever system you choose, always make sure there are no open flames or pilot lights in the same room as the dust collector. There is a risk of explosion if dust is dispersed into the air.

Duct Material

You have many choices regarding main line and branch line duct material. For best results, use smooth metal duct for the main line and branch lines, then use short lengths of flexible hose to connect each machine to the branch lines.

Plastic duct is also a popular material for home shops. However, be aware that there is a fire or explosion hazard if plastic duct material is not properly grounded to prevent static electrical buildup (refer to **System Grounding** at the end of this section). Another problem with using plastic duct is that it is less efficient per foot than metal.

⚠CAUTION

Plastic duct generates static electrical buildup that can cause fire or shock. Properly ground it to reduce this risk.

Plastic Duct

The popularity of plastic duct is due to the fact that it is an economical and readily available product. It is also simple to assemble and easily sealed against air loss. The primary disadvantage of plastic duct for dust collection is the inherent danger of static electrical buildup.

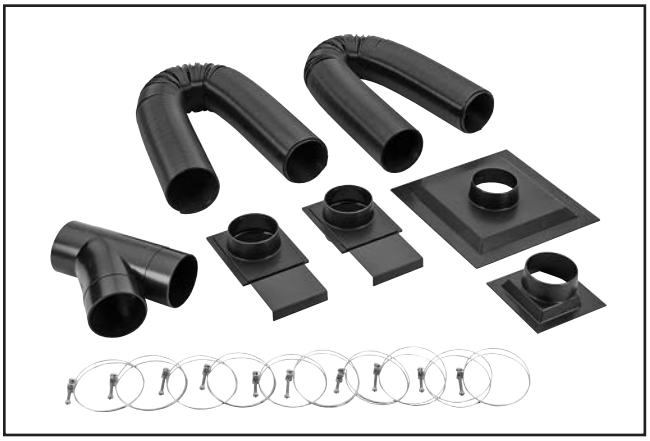

Figure 31. Examples of plastic ducting components.

Metal Duct

Advantages of smooth metal duct is its conductivity, efficiency, and that it does not contribute to static electrical charge build-up. However, static charges are still produced when dust particles strike other dust particles as they move through the duct. Since metal duct is a conductor, it can be grounded quite easily to dissipate any static electrical charges.

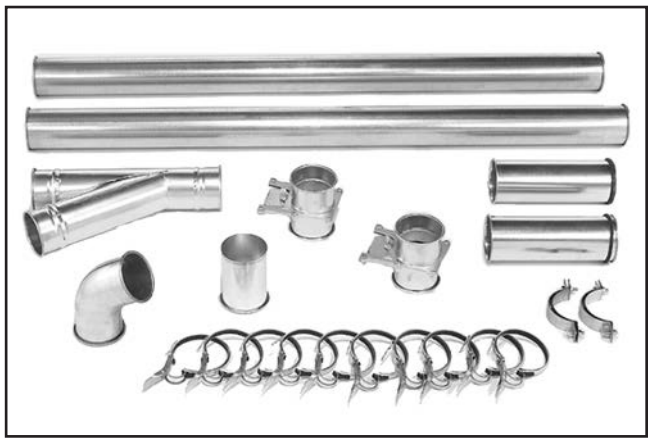

Figure 32. Examples of metal pipe and components.

There are a number of options when it comes to metal duct, but metal duct that is specially manufactured for dust collection is the best choice. When selecting your metal duct, choose high quality metal duct with smooth welded internal seams that will minimize airflow resistance. This type of duct usually connects to other ducts or elbows with a simple, self-sealing clamp, is very quick and easy to assemble, and can be readily dismantled and re-installed in a different configuration. This is especially important if you ever need to change things around in your shop or add more tools.

Avoid inferior metal duct that requires you to cut it to length and snap it together. This type of duct is time consuming to install because it requires you to seal all the seams with silicone and screw the components on the ends with sheet metal screws. Another disadvantage is the rough internal seams and crimped ends that unavoidably increase static pressure loss.

Flexible Duct

Flexible hose is generally used for short runs, small shops and at rigid duct-to-tool connections. There are many different types of flex hose on the market today. These are manufactured from materials such as polyethylene, PVC, cloth hose dipped in rubber and even metal, including steel and aluminum.

The superior choice here is metal flex hose that is designed to be flexible, yet be as smooth as possible inside to reduce static pressure loss.

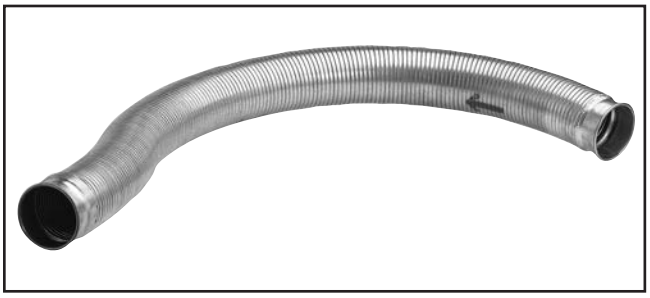

Figure 33. Example of flexible metal duct.

There are also many kinds of pure plastic flexible hose, such as non-perforated drainage type hose and dryer vent hose. Drainage type hose, while being economical, does not quite have the flexibility required for dust collection. The inside of the duct is also deeply corrugated and can increase the static pressure loss by as much as 50% over smooth wall duct. Dryer vent hose, while being completely flexible, is non-resistant to abrasion and has a tendency to collapse in a negative pressure system. We DO NOT recommend using dryer vent hose in your dust collection system.

If using flex-hose, you should choose one of the many types that are designed specifically for the movement of solid particles, i.e. dust, grains, and plastics. However, the cost of specifically designed flexible duct can vary greatly. Grizzly offers polyethylene hose, which is well suited for the removal of particulate matter, especially sawdust, since it is durable and completely flexible. Polyethylene is also very economical and available in a wide variety of diameters and lengths for most applications.

System Design

Step 1. Decide Who Will Design

For most small-to-medium sized shops, you can design and build the dust collection system yourself without hiring engineers or consultants. We have included some basic information here to get you started on a basic design.

If you have a large shop or plan to design a complicated system, we recommend doing additional research beyond this manual or seeking the help of an expert.

Step 2. Sketch Your Shop Layout

When designing a successful dust collection system, planning is the most important step. In this step, sketch a basic layout of your shop, including space requirements of different machines.

Before you get out your pencil and paper, we recommend you visit our FREE *Workshop Planner,* at **http://www.grizzly.com/workshopplanner**.

Our *Workshop Planner* will allow you to quickly and easily design and print a basic shop layout. Don't worry, non-Grizzly brand machines can be substituted with Grizzly machines for layout purposes. **Note:** *After you're finished, make sure to save your layout for later modification.*

Your sketch only needs the basic details of the shop layout, similar to the figure below, including all your current/planned machines and your planned placement of the dust collector.

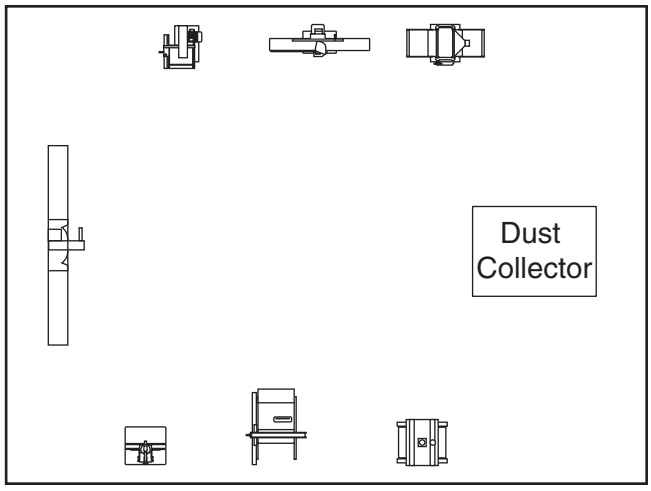

Figure 34. Basic sketch of shop layout.

Step 3. Sketch a Basic Duct Layout

For the next step, sketch how you will connect your machines to the dust collector. Consider these general guidelines for an efficient system:

1. Machines that produce the most saw dust should be placed nearest to the dust collector (i.e. planers and sanders).

2. Ideally, you should design the duct system to have the shortest possible main line and secondary branch ducts. See the figures below for ideas of efficient versus inefficient duct layouts.

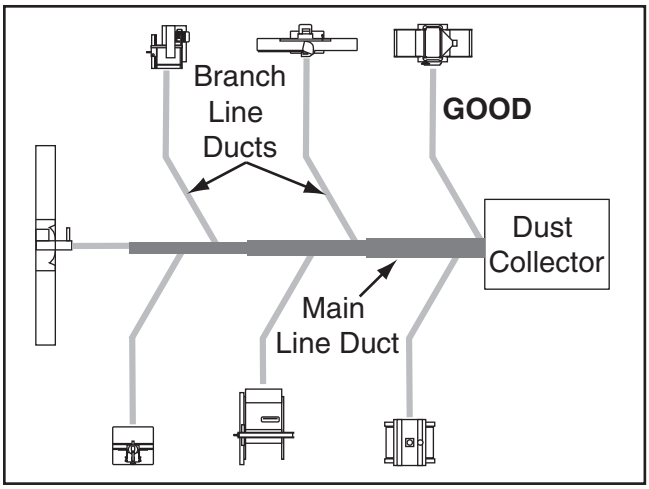

Figure 35. Efficient duct layout.

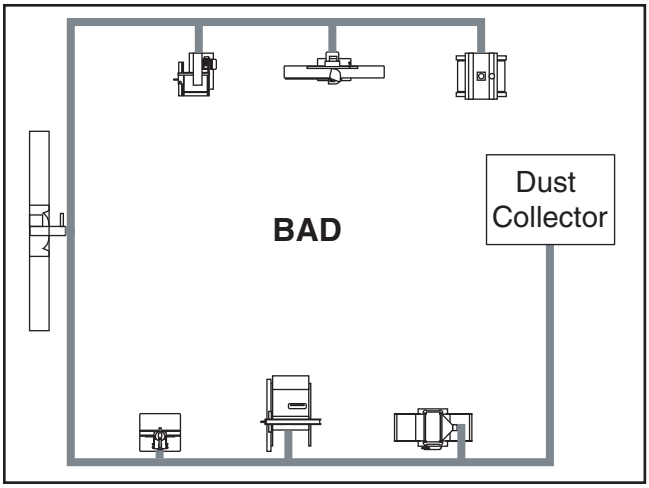

Figure 36. Inefficient duct layout.

3. Directional changes should be kept to a minimum. The more directional change fittings you use directly increases the overall resistance to airflow.

4. Gradual directional changes are more efficient than sudden directional changes (i.e. use the largest corner radius possible when changing hose or pipe direction).

5. Each individual branch line should have a blast gate immediately after the branch to control suction from one machine to another.

6. The simpler the system, the more efficient and less costly it will be.

Step 4. Determine Required CFMs

Since each machine produces a different amount of sawdust, the requirements for the minimum amount of CFM to move that sawdust is unique to the machine (for example, a planer produces more sawdust than a table saw). Knowing this required CFM is important to gauging which size of duct to use.

Refer to the figure below for a close estimation of the airflow each machine requires. Keep in mind that machines that generate the most sawdust should be placed closest to the dust collector. If the machine has multiple dust ports, the total CFM required is the sum of all ports.

Machine Dust Port Size	Approximate Required CFM
2"	100
2.5"	150
3"	250
4"	400
5"	600
6"	850
7"	1200
8"	1600
9"	2000
10"	2500

Figure 37. Approximate required airflow for machines, based on dust port size.

If the machine does not have a built-in dust port, use the following table to determine which size of dust port to install.

Machine	Average Dust Port Size
Table Saw	4"
Miter/Radial-Arm Saw	2"
Jointer (6" and smaller)	4"
Jointer (8"-12")	5"
Thickness Planer (13" and smaller)	4"
Thickness Planer (14"-20")	6"
Shaper	4"
Router (mounted to table)	2"
Bandsaw	4"
Lathe	4"
Disc Sander (12" and smaller)	2"
Disc Sander (13-18")	4"
Belt Sander (6" and smaller)	2"
Belt Sander (7"-9")	3"
Edge Sander (6" x 80" and smaller)	4"
Edge Sander (6" x 80" and larger)	5"
Drum Sander (24" and smaller)	2 x 4"
Drum Sander (24" and larger)	4 x 4"
Widebelt Sander (18" and smaller)	5"
Widebelt Sander (24"-37" single head)	2 x 6"
Widebelt Sander (24"-51" double head)	5 x 4"

Figure 38. Dust port size and quantity per average machine.

Write the required CFM for each machine on your sketch, as shown in the figure below.

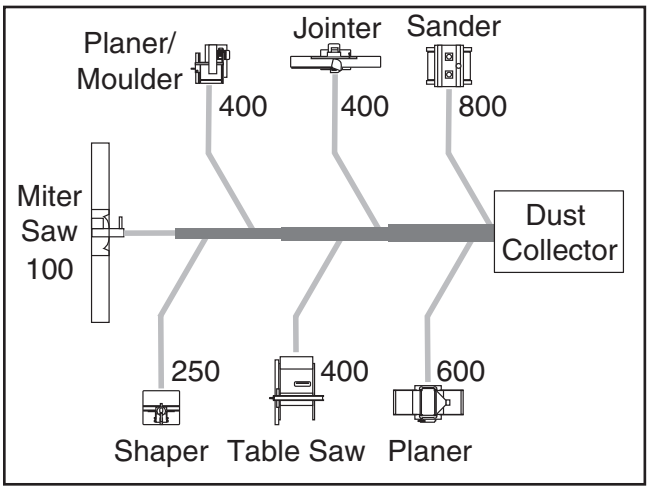

Figure 39. CFM requirements labeled for each machine.

Determining Main Line Duct Size

The general rule of thumb for a main line duct is that the velocity of the airflow must not fall below 3500 FPM.

For small/medium sized shops, using the inlet size of the dust collector as the main line duct size will usually keep the air velocity above 3500 FPM and, depending on your system, will allow you to keep multiple branches open at one time.

Mark your drawing, as shown in the figure below, but using the inlet size for your dust collector as the main line.

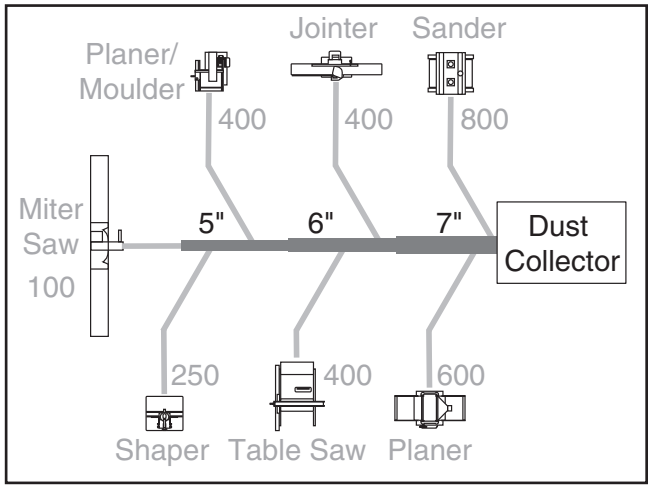

Figure 40. Main line size labeled on sketch.

Determining Branch Line Duct Size

The general rule of thumb for a branch line duct is that the velocity of the airflow must not fall below 4000 FPM.

For small/medium sized shops, using the dust port size from the machine as the branch line duct size will achieve the correct velocity in most applications. However, if the dust port on the machine is smaller than 4", make the branch line 4" and neck the line down right before the dust port.

Note: *Systems with powerful dust collectors work better if multiple blast gates are left open. This also allows you to run two machines at once. Experiment with different combinations of blast gates open/closed to find the best results for your system.*

Write your determined branch line sizes on your drawing, as shown in the following **Figure**.

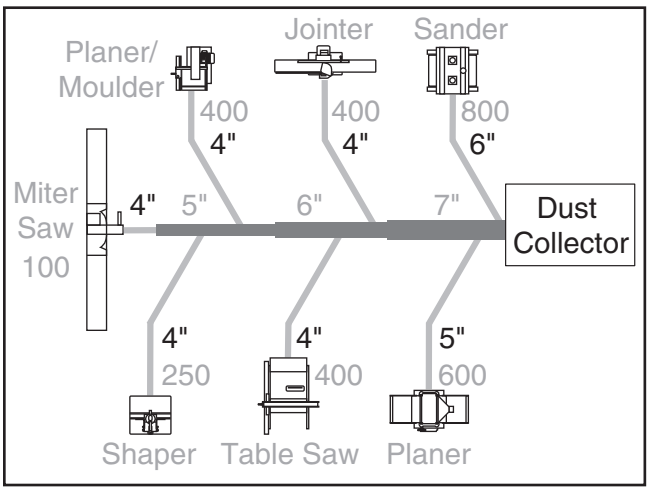

Figure 41. Branch line duct sizes labeled.

Planning Drop Downs

Plan the drop downs for each machine, using blast gates wherever possible to control airflow.

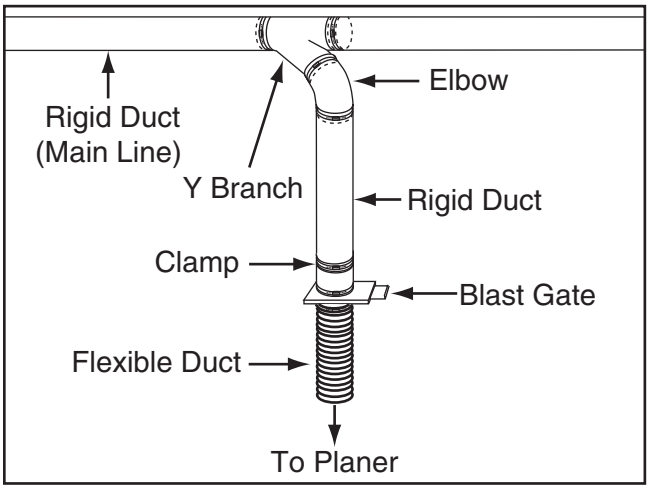

Figure 42. Drop-down setup.

Multiple Dust Ports

If your machine has multiple dust ports, add the total CFM given for each dust port size from the table provided in the earlier subsection, **Determine Required CFMs**, then find the closest CFM in the table below to determine the correct branch size. Split the branch line just before the dust ports with matching duct sizes.

Two Machines on Same Branch Line

If two machines will connect to the same branch line and both will operate at the same time, then add the required CFM for each machine together and find the closest total CFM in the table below to determine the correct branch size.

If both machines will never run at the same time, reference the machine with the biggest dust port in the table below and add blast gates after the Y-branch to open/close the line to each machine.

Total CFM	Branch Line Size
400	4"
500	4"
600	5"
700	5"
800	6"
900	6"
1000	6"

Calculating Duct Resistance

Adding duct work, elbows, branches and any other components to a duct line increases airflow resistance (static pressure loss). This resistance can be minimized by using rigid (smooth) duct and gradual curves, as opposed to flexible duct and 90˚ elbows.

To help you think about this resistance, imagine riding a bicycle in a tunnel that is an exact replica of your duct work. If the inside of the tunnel is very bumpy (flexible duct) and has a lot of sharp turns (90˚ elbows), it will take a lot more effort to travel from one end to the other.

The purpose of calculating the resistance is to determine if it is low enough from the machine to the dust collector to meet the given CFM requirement for the machine. Use the following tables to calculate the resistance of duct work.

Duct Dia.	Approximate Static Pressure Loss Per Foot of Rigid Duct		Approximate Static Pressure Loss Per Foot of Flexible Duct	
	Main Lines at 3500 FPM	Branch Lines at 4000 FPM	Main Lines at 3500 FPM	Branch Lines at 4000 FPM
2"	0.091	0.122	0.35	0.453
2.5"	0.08	0.107	0.306	0.397
3"	0.071	0.094	0.271	0.352
4"	0.057	0.075	0.215	0.28
5"	0.046	0.059	0.172	0.225
6"	0.037	0.047	0.136	0.18
7"	0.029	0.036	0.106	0.141
8"	0.023	0.027	0.08	0.108
9"	0.017	0.019	0.057	0.079

Fitting Dia.	90˚ Elbow	45˚ Elbow	45˚ Wye(Y)	90˚ Wye(Y)
3"	0.47	0.235	0.282	0.188
4"	0.45	0.225	0.375	0.225
5"	0.531	0.266	0.354	0.236
6"	0.564	0.282	0.329	0.235
7"	0.468	0.234	0.324	0.216
8"	0.405	0.203	0.297	0.189

Figure 43. Static pressure loss tables.

In most small/medium shops it is only necessary to calculate the line with the longest duct length or the most fittings (operating under the assumption that if the line with the highest resistance works, the others will be fine).

To calculate the static pressure of any given line in the system, follow these steps:

1. Make a list of each size duct in the line, including the length, and multiply those numbers by the static pressure value given in the previous table.

2. List each type of elbow or branch and multiply the quantity (if more than one) by the static pressure loss given in the previous table.

3. Add the additional factors from the following table to your list.

Additional Factors	Static Pressure
Seasoned (well used) Dust Collection Filter	1"
Entry Loss at Large Machine Hood	2"

Figure 44. Additional factors affecting static pressure.

4. Total your list as shown in the example below to come up with your overall static pressure loss number for that line.

   Note: *Always account for a seasoned filter, so you don't end up with a system that only works right when the filter is clean.*

Main Line	
6" Rigid Duct (0.037) at 20'	0.740
Branch Line	
4" Rigid Duct (0.075) at 10'	0.750
4" Flexible Duct (0.28) at 5'	1.400
Elbows/Branches	
6" 45˚ Y-Branch	0.329
4" 45˚ Elbow	0.225
Additional Factors	
Seasoned Filter	1.000
Total Static Pressure Loss	**4.444**

Figure 45. Totaling static pressure numbers.

   Note: *When calculating static pressure loss to determine if multiple lines can be left open at the same time, only include the main line numbers once.*

5. Compare the total static pressure loss for that line to the closest CFM given in **Figure 46** for your dust collector on **Page 29**.

   Example: A typical **Data Sheet Performance Curve** is illustrated in **Figure 46**. Find 4.4 on the Static Pressure axis (the amount of total static pressure loss calculated in **Figure 45**), then refer to the closest value on the CFM axis—approximately 1120 CFM.

   The 1120 CFM for the static pressure loss of the line connected to the router is well above the 220 CFM requirement of that machine.

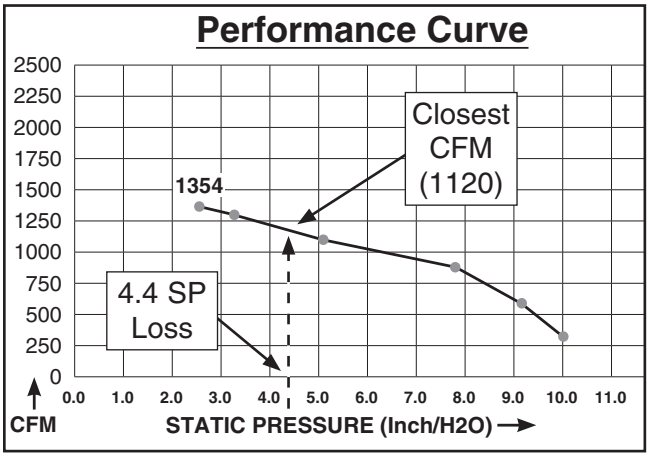

Figure 46. CFM for static pressure loss of line connected to a dust collector & router.

— If the CFM for your static pressure loss is above the requirement of the machine connected to the end of that branch line, then dust collection will most likely be successful. Congratulations! You've just designed your own dust system. Refer to the **Accessories** section on **Page 33** to start buying the components necessary to make your system a reality.

— If the CFM for your static pressure loss is below the requirement of the machine, then that line will not effectively collect the dust. You must then modify some of the factors in that line to reduce the static pressure loss. Some of the ways to do this include 1) installing larger duct, 2) reducing amount of flexible duct used, 3) increasing machine dust port size, 4) moving machine closer to dust collector to eliminate duct length, and 5) reducing 90˚ elbows or replacing them with 45˚ elbows.

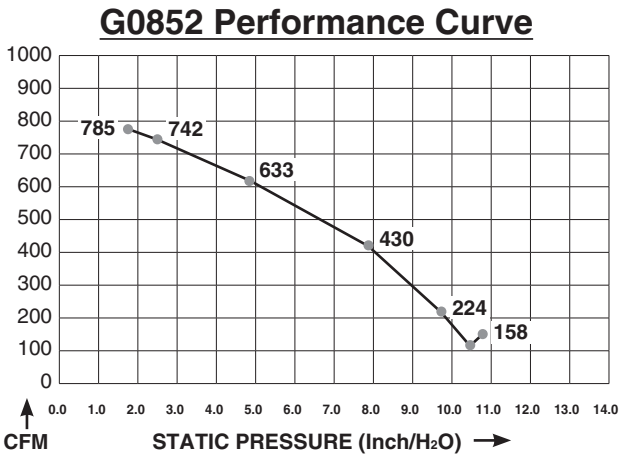

1.5 HP GRIZZLY DUST COLLECTOR PERFORMANCE RESULTS					
Max CFM	**Max SP**	**HP**	**Volts**	**Inlet**	**Impeller**
785	10.8	1.5 HP	120/240V	6"	12½"

Restrictor Plate Diameter (inch)	6"	5"	4"	3"	2"	0"
Static Pressure (Inch/H_2O)	1.8	2.5	4.9	7.9	9.7	10.8
CFM	785	742	633	430	224	158

The airflow test probe is located 1.5x duct diameter upstream from the air inlet. Test pipe length is a minimum of 10x duct diameter.

Figure 47. G0852 performance curve chart and data.

Example Materials List

After the system is designed, create a materials list of all the items you will need to build your dust collection system. This will make it easy when it comes time to purchase the materials.

Below is an example of some items that might be needed. Refer to **Accessories** for dust collection components available through *grizzly.com*.

Description	Model	Quantity
6" Rigid Duct at 20'	G7364	4
4" Rigid Duct at 10'	G6162	2
4" Flex Hose at 5'	H7215	6
6" 45° Y-Branch	G7353	6
4" 45° Elbow	G6167	6

System Grounding

Since plastic hose is abundant, relatively inexpensive, easily assembled and air tight, it is a very popular material for conveying dust from woodworking machines to the dust collector.

We recommend only using short lengths of flexible hose (flex-hose) to connect the woodworking machine to the dust collector. However, plastic flex-hose and plastic duct are an insulator, and dust particles moving against the walls of the plastic duct create a static electrical buildup. This charge will build until it discharges to a ground.

If a grounding medium is not available to prevent static electrical buildup, the electrical charge will arc to the nearest grounded source. This electrical discharge may cause an explosion and subsequent fire inside the system.

To protect against static electrical buildup inside a non-conducting duct, a bare copper wire should be placed inside the duct along its length and grounded to the dust collector. You must also confirm that the dust collector is continuously grounded through the electrical circuit to the electric service panel.

If you connect the dust collector to more than one machine by way of a non-conducting branching duct system and blast gates, the system must still be grounded as mentioned above. We recommend inserting a continuous bare copper ground

⚠CAUTION

Always guard against static electrical build up by grounding all dust collection lines.

Be sure that you extend the bare copper wire down all branches of the system. Do not forget to connect the wires to each other with wire nuts when two branches meet at a “Y” or “T” connection.

Ensure that the entire system is grounded. If using plastic blast gates to direct air flow, the grounding wire must be jumped (see the figure below) around the blast gate without interruption to the grounding system.

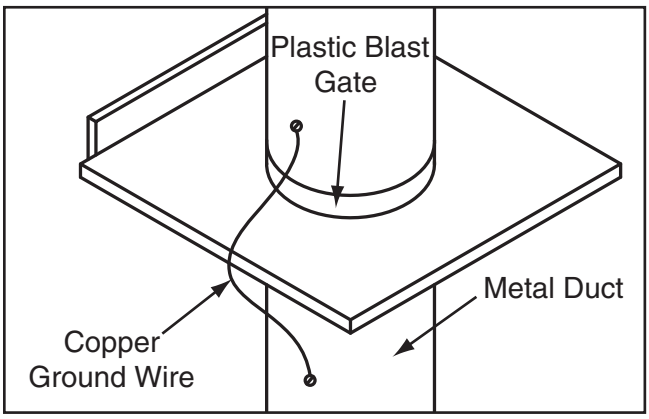

Figure 48. Ground jumper wire when using plastic blast gates and metal duct.

We also recommend wrapping the outside of all plastic ducts with bare copper wire to ground the outside of the system against static electrical buildup. Wire connections at Y’s and T’s should be made with wire nuts.

Attach the bare ground wire to each stationary woodworking machine and attach to the dust collector frame with a ground screw as shown in the figure below. Ensure that each machine is continuously grounded to the grounding terminal in your electric service panel.

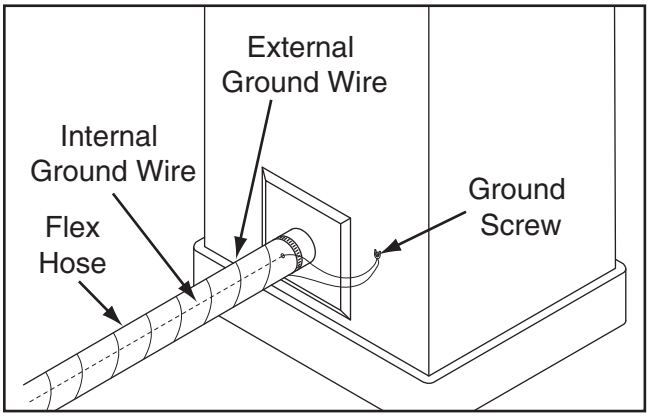

Figure 49. Flex-hose grounded to machine.

SECTION 5: OPERATIONS

Operation Overview

The purpose of this overview is to provide the novice machine operator with a basic understanding of how the machine is used during operation, so the machine controls/components discussed later in this manual are easier to understand.

Due to the generic nature of this overview, it is **not** intended to be an instructional guide. To learn more about specific operations, read this entire manual, seek additional training from experienced machine operators, and do additional research outside of this manual by reading "how-to" books, trade magazines, or websites.

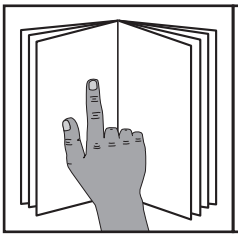

WARNING

To reduce your risk of serious injury, read this entire manual BEFORE using machine.

WARNING

To reduce risk of eye injury from flying chips or lung damage from breathing dust, always wear safety glasses and a respirator when operating this machine.

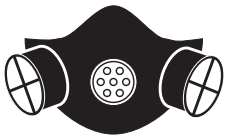

NOTICE

If you are not experienced with this type of machine, WE STRONGLY RECOMMEND that you seek additional training outside of this manual. Read books/magazines or get formal training before beginning any projects. Regardless of the content in this section, Grizzly Industrial will not be held liable for accidents caused by lack of training.

General Operation

This cyclone dust collector creates a vortex of incoming air that extracts heavy wood chips and large dust particles, and then drops them into the collection bag below (see **Figure 50**).

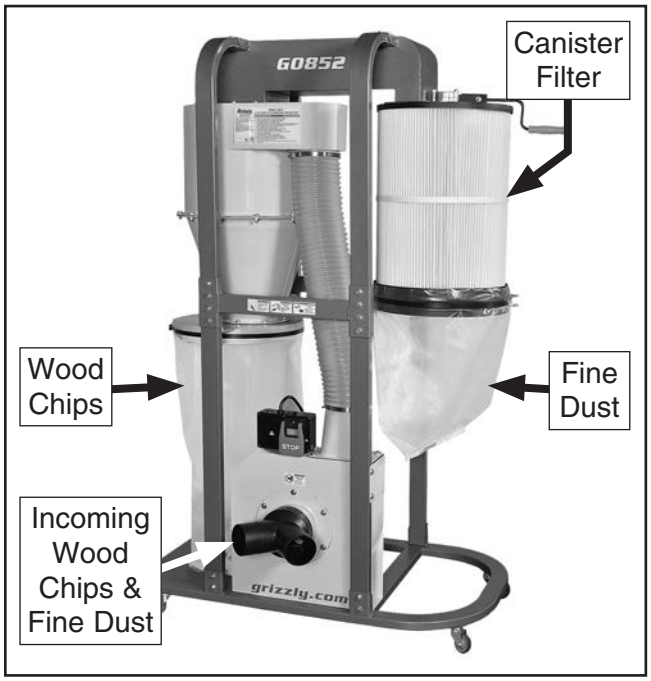

Figure 50. Dust collector operation.

The remaining dust is caught by the canister filter and deposited in the filter bag below. This spunbond polyester filter catches 99.9% of particles from 0.2 to 2 micron in size, and is pleated to provide maximum surface area for efficient airflow.

To maintain CFM during heavy dust-collection operations, a handle rotates internal brushes that knock caked-on dust into the filter bag.

Using Controls

Operating Switch Box

Refer to **Figure 51** and the following descriptions to understand the switch box functions.

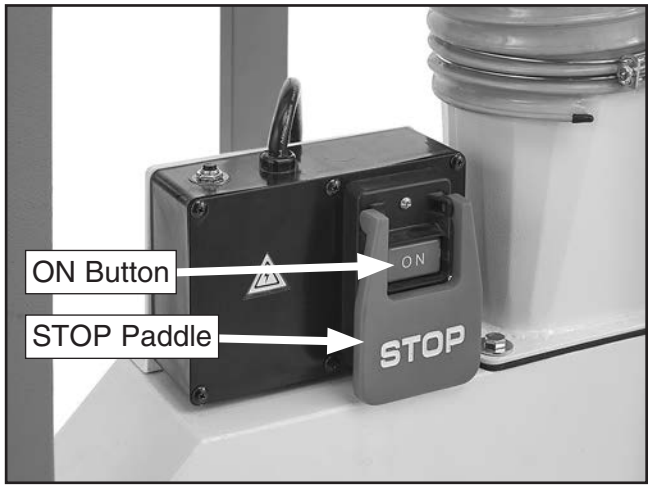

Figure 51. Switch box controls.

ON Button: Turns main motor ***ON*** by pressing it once.

STOP Paddle: Turns main motor ***OFF*** by pressing it once.

Operating Filter Cleaning Brush

Refer to **Figure 52** and the following description to understand the filter cleaning brush functions.

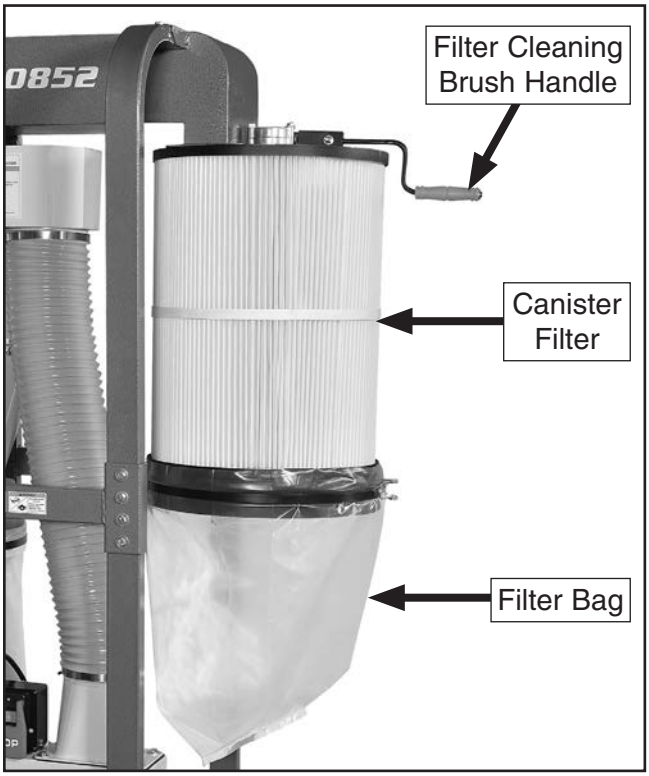

Figure 52. Filter cleaning brush handle.

Filter Cleaning Brush Handle: Before each use, turn filter cleaning brush handle to rotate internal brushes that knock caked-on dust from the canister filter into the filter bag.

SECTION 6: ACCESSORIES

⚠WARNING

Installing unapproved accessories may cause machine to malfunction, resulting in serious personal injury or machine damage. To reduce this risk, only install accessories recommended for this machine by Grizzly.

NOTICE

Refer to our website or latest catalog for additional recommended accessories.

W1050—Dust Collection Basics Book
This incisive book skillfully guides the woodworker through all the steps necessary in the design and construction of an efficient central dust-collection system and tells you what you need to know for easy installation. 64 pages.

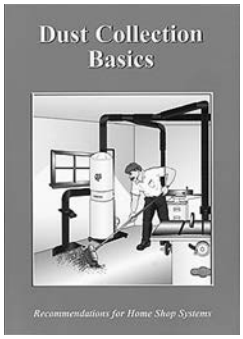

Figure 53. W1050 Dust Collection Basics Book.

H7217—6" x 5' Rigid Flex Industrial Dust Collection Hose
H7217 Rigid Flex Hose with rolled collars provides just enough flexibility to make difficult connections while still keeping the inside wall as smooth as possible.

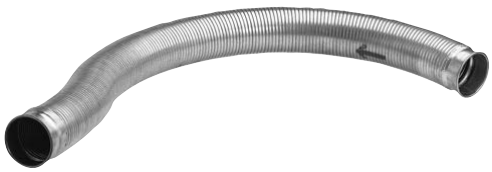

Figure 54. H7217 Rigid Flex Dust Hose.

W1034—4" x 10' Dust Hose
W1036—6" x 10' Dust Hose
Spiral wire reinforced clear hose allows easy inspection for locating potential clogs in your duct system. Uses RH fittings.

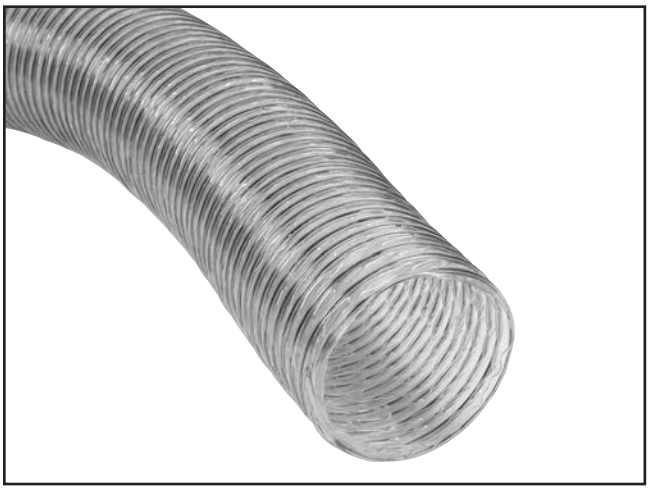

Figure 55. Clear dust hose.

G6177—4" Metal Blast Gate
G7340—5" Metal Blast Gate
G7358—6" Metal Blast Gate
Control airflow and resistance between machines. These industrial blast gates can take the abuse of thousands of open and close cycles. Made specifically for production shops. These metal industrial dust collection fittings are simply the best you can find.

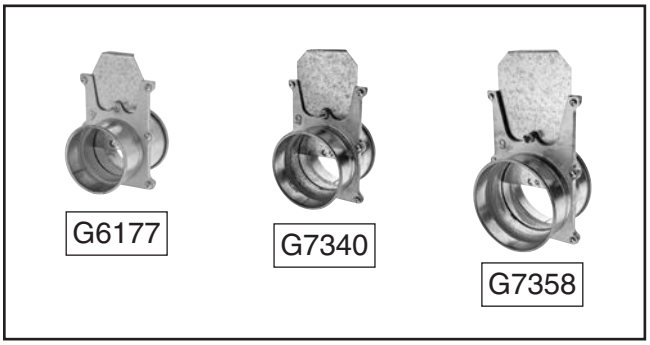

Figure 56. Metal blast gate assortment.

T27420—Viewing Spool 6"
This viewing spool is a section of acrylic glass with QF ends so you can keep an eye on your material flow. Makes it a cinch to check for slow-downs or debris! Ends are 22 gauge, 6" opening. Total length 12½".

Figure 57. T27420 Viewing Spool 6".

T10117—Big Mouth Dust Hood with Stand
G2753—4" Bench Attachment
G2754—4" Floor Attachment
These attachments are indispensable for collecting dust at machines without a port. Designed for use with 4" flexible hose (not included).

Figure 58. Dust-collection attachments.

W1039—Universal Adapter
This adapter provides a multitude of reducing options. Simply cut off unneeded steps. Outside diameter sizes include 1", 2", 2½", 3", 4", 5", and 6". Wall thickness is ⅛".

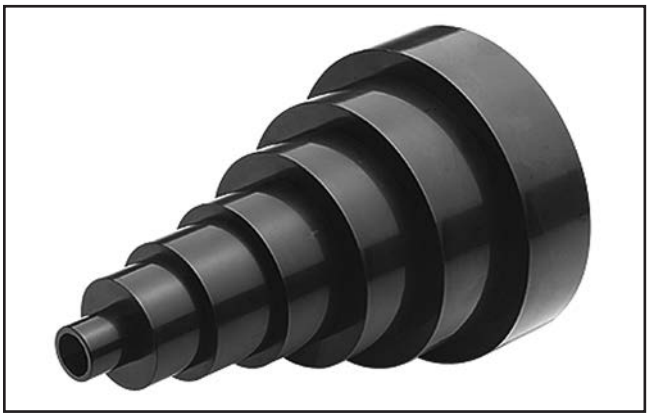

Figure 59. W1039 Universal Adapter.

D4206—Clear Flexible Hose 4" x 10'
D4256—45° Elbow 4"
D4216—Black Flexible Hose 4" x 10'
W1034—Heavy-Duty Clear Flex Hose 4" x 10'
D2107—Hose Hanger 4¼"
W1015—Y-Fitting 4" x 4" x 4"
W1017—90° Elbow 4"
W1019—Hose Coupler (Splice) 4"
W1317—Wire Hose Clamp 4"
W1007—Plastic Blast Gate 4"
W1053—Anti-Static Grounding Kit

Figure 60. Dust-collection accessories.

SECTION 7: MAINTENANCE

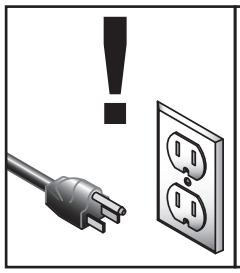

⚠WARNING

To reduce risk of shock or accidental startup, always disconnect machine from power before adjustments, maintenance, or service.

Schedule

For optimum performance from this machine, this maintenance schedule must be strictly followed.

Ongoing

To maintain a low risk of injury and proper machine operation, if you ever observe any of the items below, shut down the machine immediately and fix the problem before continuing operations:

- Loose mounting bolts.
- Damaged filter canister, cleaning brush components, or collection bags.
- Worn or damaged wires.
- Suction leaks.
- Any other unsafe condition.

Monthly Check

- Clean/vacuum dust buildup off machine body and motor.

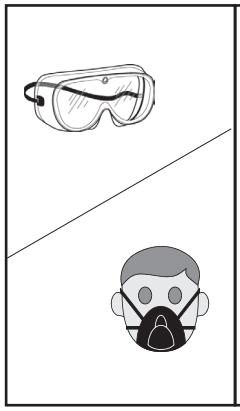

⚠CAUTION

Dust exposure created while using machinery may cause cancer, birth defects, or long-term respiratory damage. Always wear goggles and a NIOSH-approved respirator when working with the dust collection bags or canisters.

Emptying/Replacing Filter Bag

Dispose of the filter bag when dust fills it about ½ full. Immediately replace the bag if it develops a leak or becomes damaged.

IMPORTANT: To contain wood dust and minimize exposure risk, firmly tie bag closed after removal.

Items Needed	**Qty**
Filter Bag T28925	1

To remove and replace filter bag:

1. DISCONNECT MACHINE FROM POWER!
2. Release bag clamp on canister filter (see **Figure 61**).

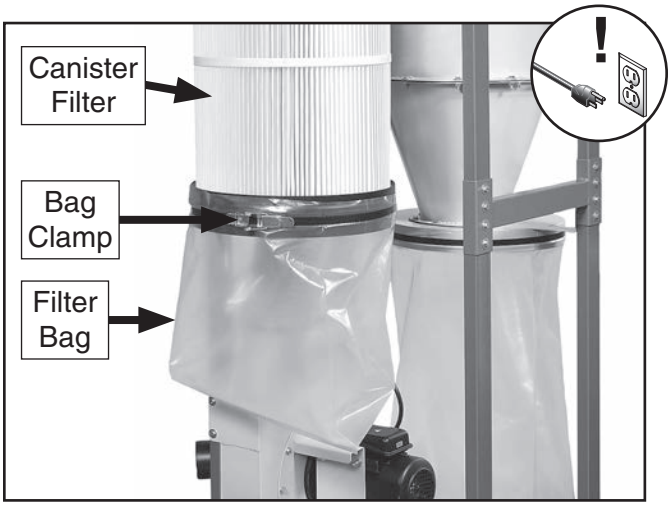

Figure 61. Filter bag components.

3. Remove bag from canister filter and dispose of contents.
4. Place new dust bag on filter.
5. Re-install bag clamp to secure.

Emptying/Replacing Collection Bag

Dispose of the collection bag when dust fills it about ¾ full. Immediately replace the bag if it develops a leak or becomes damaged.

If the bag gets overfilled, the dust will be sucked into the intake barrel and passed through to the canister filter and filter bag. Avoid allowing this to happen, as it may reduce filter life.

Items Needed **Qty**
Collection Bag T30328 1

To remove and replace collection bag:

1. DISCONNECT MACHINE FROM POWER!

2. Release bag clamp on collection lid (see **Figure 62**).

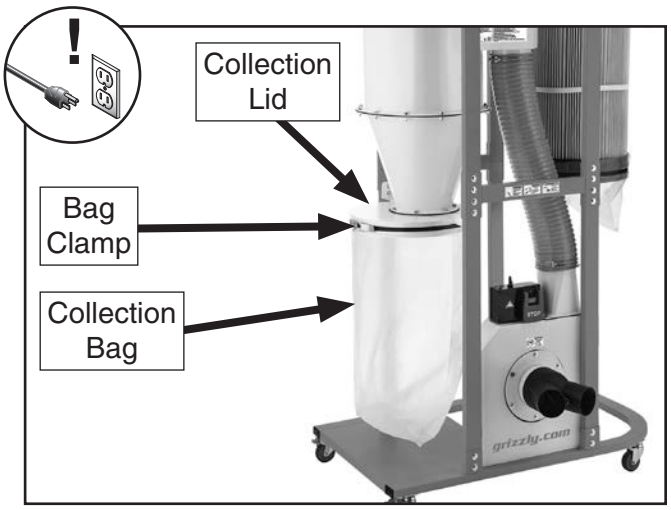

Figure 62. Collection bag components.

3. Remove bag from lid and dispose of contents.

4. Place new dust bag on collection lid.

5. Re-install bag clamp to secure.

Washing Canister Filter

The Model G0852 dust collector uses a crank handle and internal brushes to remove excess dust and debris from the filter pleats. Before each use, rotate the handle to knock dust into the filter bag. Dispose of bag when it becomes ½ full of dust.

After extended use, the filter should be replaced, or thoroughly washed by hand.

To wash filter by hand:

1. DISCONNECT MACHINE FROM POWER!

2. Remove plastic filter bag, firmly tie it closed, then dispose of bag.

3. Remove canister filter (see **Page 39**).

4. Rinse filter with water in an appropriate outdoor location.

   IMPORTANT: DO NOT use a pressure washer to clean the filter, as this can damage filter fibers. DO NOT use compressed air to clean or dry filter, as this can spread fine dust into air and damage filter fibers.

5. Allow filter to air dry only. DO NOT use heat.

SECTION 8: SERVICE

Review the troubleshooting procedures in this section if a problem develops with your machine. If you need replacement parts or additional help with a procedure, call our Technical Support. **Note:** *Please gather the serial number and manufacture date of your machine before calling.*

Troubleshooting

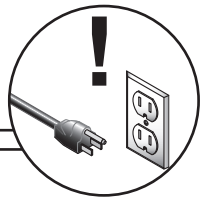

Motor & Electrical

Symptom	Possible Cause	Possible Solution
Machine does not start or a breaker trips immediately after startup.	1. Dust collector not properly connected to ducting with resistance at opposite end. 2. Incorrect power supply voltage or circuit size. 3. Power supply circuit breaker tripped or fuse blown. 4. Machine circuit breaker has tripped. 5. Wiring open/has high resistance. 6. Centrifugal switch/contact points at fault. 7. Power switch/circuit breaker at fault. 8. Start capacitor at fault. 9. Motor at fault.	1. Connect dust collector to ducting with resistance at opposite end (**Page 22**). 2. Ensure correct power supply voltage and circuit size. 3. Ensure circuit is sized correctly and free of shorts. Reset circuit breaker or replace fuse. 4. Reset circuit breaker on switch. 5. Check/fix broken, disconnected, or corroded wires. 6. Adjust/replace centrifugal switch/contact points if available. 7. Test/replace. 8. Test/replace. 9. Test/repair/replace.
Machine seems underpowered.	1. Motor overheated. 2. Dust-collection ducting problem. 3. Canister filter clogged/at fault. 4. Dust collector undersized. 5. Run capacitor at fault. 6. Centrifugal switch/contact points at fault. 7. Motor bearings at fault.	1. Allow motor to cool, reset overload if necessary. 2. Clear blockages, seal leaks, use smooth-wall duct, eliminate bends, close other branches (**Page 22**). 3. Wash canister filter (**Page 36**); replace canister filter (**Page 39**). 4. Move closer to machine/redesign ducting layout/upgrade dust collector. 5. Test/repair/replace. 6. Adjust/replace centrifugal switch/contact points if available. 7. Test by rotating shaft; rotational grinding/loose shaft requires bearing replacement.
Machine has vibration or noisy operation.	1. Motor or component loose. 2. Motor fan rubbing on fan cover. 3. Motor mount loose/broken. 4. Centrifugal switch is at fault. 5. Impeller damaged or unbalanced. 6. Motor bearings at fault. 7. Motor shaft bent.	1. Inspect/replace damaged bolts/nuts, and retighten with thread-locking fluid. 2. Fix/replace fan cover; replace loose/damaged fan. 3. Tighten/replace. 4. Adjust/replace centrifugal switch if available. 5. Replace. 6. Test by rotating shaft; rotational grinding/loose shaft requires bearing replacement. 7. Test with dial indicator. Replace motor if damaged.

Dust Collector Operation

Symptom	Possible Cause	Possible Solution
Loud, repetitious noise, or excessive vibration coming from dust collector (non-motor related).	1. Dust collector not on a flat surface and wobbles. 2. Impeller is damaged and unbalanced. 3. Impeller is loose on the motor shaft.	1. Stabilize dust collector; lock casters. 2. Disconnect dust collector from power. Inspect impeller for dents, bends, or loose fins. Replace impeller if damaged. 3. Secure impeller; replace motor and impeller as a set if motor shaft and impeller hub are damaged.
Dust collector does not adequately collect dust or chips; poor performance.	1. Collection bag is full. 2. Canister filter is clogged/at fault. 3. Ducting blocked/restricted. 4. Dust collector too far away from point of suction; duct clamps not properly secured; too many sharp bends in ducting. 5. Lumber is wet and dust is not flowing smoothly through ducting. 6. Ducting has one or more leaks, or too many open ports. 7. Not enough open branch lines at one time, causing a velocity drop in main line. 8. Ducting and ports are incorrectly sized. 9. The machine dust collection design is inadequate. 10. Dust collector is undersized.	1. Empty collection bag. 2. Wash canister filter (**Page 36**); replace canister filter (**Page 39**). 3. Remove ducting from dust collector inlet and unblock the restriction. A plumbing snake may be necessary. 4. Relocate dust collector closer to point of suction; re-secure ducts; remove sharp bends. Refer to **Designing the System** in manual. 5. Process lumber with less than 20% moisture content. 6. Seal/eliminate all ducting leaks; close dust ports for lines not being used. Refer to **Designing the System** in manual. 7. Open 1 or 2 more blast gates to different branch lines to increase main line velocity. 8. Install correctly sized ducts and fittings (**Page 22**) Refer to **Designing the System** in manual. 9. Use a dust collection hood on a stand (**Page 34**). 10. Install a larger dust collector.
Dust collector blows sawdust into the air.	1. Duct clamps or filter bag(s) are not properly clamped and secured; ducting loose/damaged. 2. Cylinder or funnel seals are loose or damaged.	1. Re-secure ducts and filter bag, making sure duct and bag clamp are tight; tighten/replace ducting. 2. Retighten all mounting and sealing points; replace damaged seals/gaskets.

Removing/Replacing Canister Filter

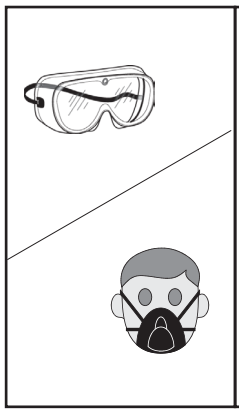

⚠CAUTION

Dust exposure created while using machinery may cause cancer, birth defects, or long-term respiratory damage. Always wear goggles and a NIOSH-approved respirator when working with the dust collection bags or canisters.

If the canister filter is clogged or dirty and cleaning it does not improve dust-collection performance, the canister filter must be replaced.

Items Needed	**Qty**
An Assistant	1
Wrench or Socket 12mm	1
Wrench or Socket 10mm	1
Hex Wrench 5mm	1
Shop Vac	1
Canister Filter T30321	1
Filter Bag T28925	1

To remove and replace canister filter:

1. DISCONNECT MACHINE FROM POWER!

2. Release bag clamp, then remove filter bag (see **Figure 63**).

IMPORTANT: To contain wood dust and minimize exposure risk, firmly tie bag closed after removal and dispose of properly.

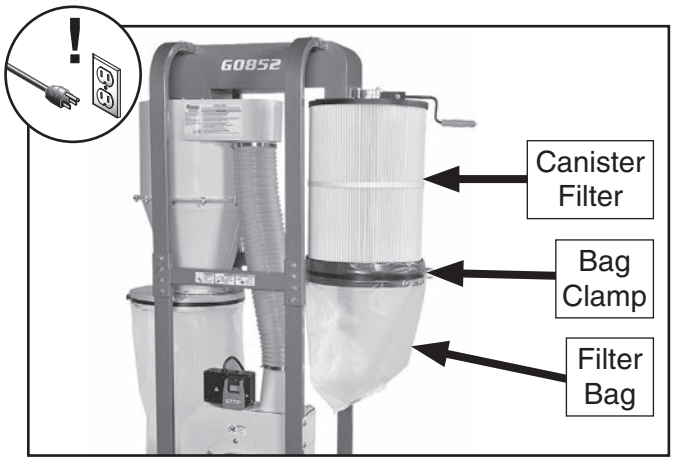

Figure 63. Filter bag components.

3. Remove (2) 5⁄16"-18 x 2½" hex bolts securing filter cleaning handle assembly to canister filter, then lift off handle (see **Figure 64**).

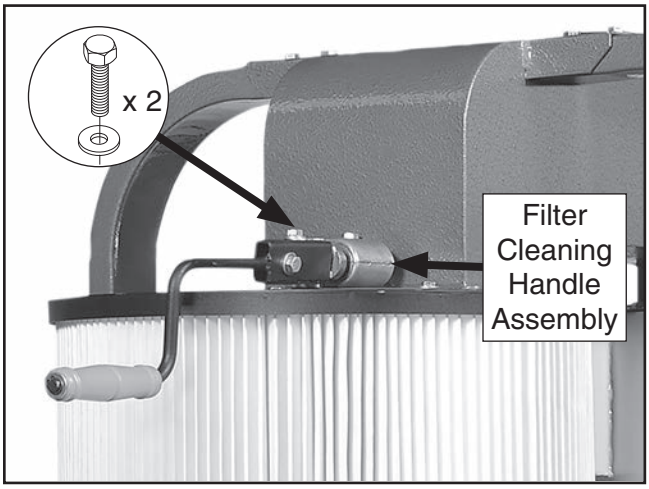

Figure 64. Filter cleaning handle fasteners.

4. Remove brush handle spindle block from canister filter brush spindle, as shown in **Figure 65**.

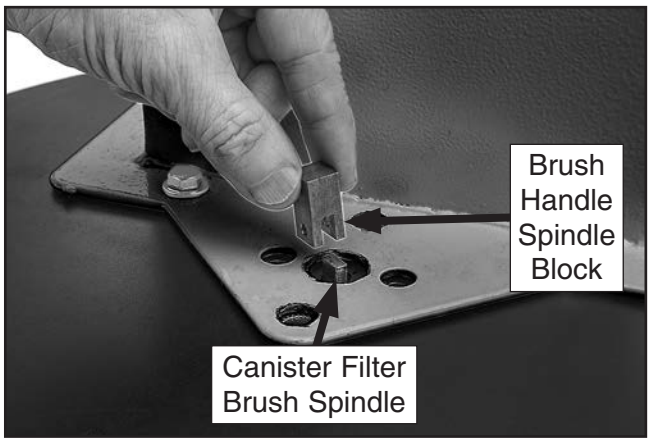

Figure 65. Removing brush spindle block from canister filter brush spindle.

5. Remove (5) 5/16"-18 x 3/4" hex bolts and (5) 5/16" fender washers securing canister filter to bottom of upper cover (see **Figure 66**), then remove canister filter with assistant's help.

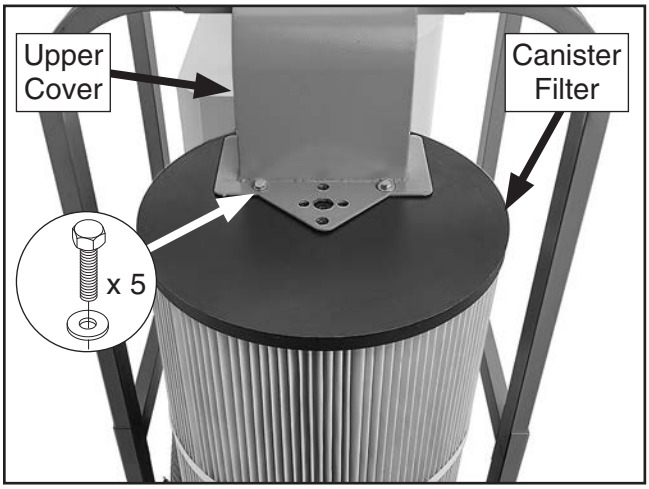

Figure 66. Canister filter mounted to upper cover.

6. Vacuum loose dust inside upper cover and on machine.

7. Reverse **Steps 2–5** to re-assemble.

SECTION 9: WIRING

These pages are current at the time of printing. However, in the spirit of improvement, we may make changes to the electrical systems of future machines. Compare the manufacture date of your machine to the one stated in this manual, and study this section carefully.

If there are differences between your machine and what is shown in this section, call Technical Support at (570) 546-9663 for assistance BEFORE making any changes to the wiring on your machine. An updated wiring diagram may be available. **Note:** *Please gather the serial number and manufacture date of your machine before calling. This information can be found on the main machine label.*

⚠WARNING
Wiring Safety Instructions

SHOCK HAZARD. Working on wiring that is connected to a power source is extremely dangerous. Touching electrified parts will result in personal injury including but not limited to severe burns, electrocution, or death. Disconnect the power from the machine before servicing electrical components!

MODIFICATIONS. Modifying the wiring beyond what is shown in the diagram may lead to unpredictable results, including serious injury or fire. This includes the installation of unapproved aftermarket parts.

WIRE CONNECTIONS. All connections must be tight to prevent wires from loosening during machine operation. Double-check all wires disconnected or connected during any wiring task to ensure tight connections.

CIRCUIT REQUIREMENTS. You MUST follow the requirements at the beginning of this manual when connecting your machine to a power source.

WIRE/COMPONENT DAMAGE. Damaged wires or components increase the risk of serious personal injury, fire, or machine damage. If you notice that any wires or components are damaged while performing a wiring task, replace those wires or components.

MOTOR WIRING. The motor wiring shown in these diagrams is current at the time of printing but may not match your machine. If you find this to be the case, use the wiring diagram inside the motor junction box.

CAPACITORS/INVERTERS. Some capacitors and power inverters store an electrical charge for up to 10 minutes after being disconnected from the power source. To reduce the risk of being shocked, wait at least this long before working on capacitors.

EXPERIENCING DIFFICULTIES. If you are experiencing difficulties understanding the information included in this section, contact our Technical Support at (570) 546-9663.

NOTICE

The photos and diagrams included in this section are best viewed in color. You can view these pages in color at www.grizzly.com.

COLOR KEY

BLACK	Bk	BLUE	Bl	YELLOW	Yl	LIGHT BLUE	Lb
WHITE	Wt	BROWN	Br	YELLOW GREEN	Yg	BLUE WHITE	Bw
GREEN	Gn	GRAY	Gy	PURPLE	Pu	TUR-QUOISE	Tu
RED	Rd	ORANGE	Or	PINK	Pk		

Wiring Diagram

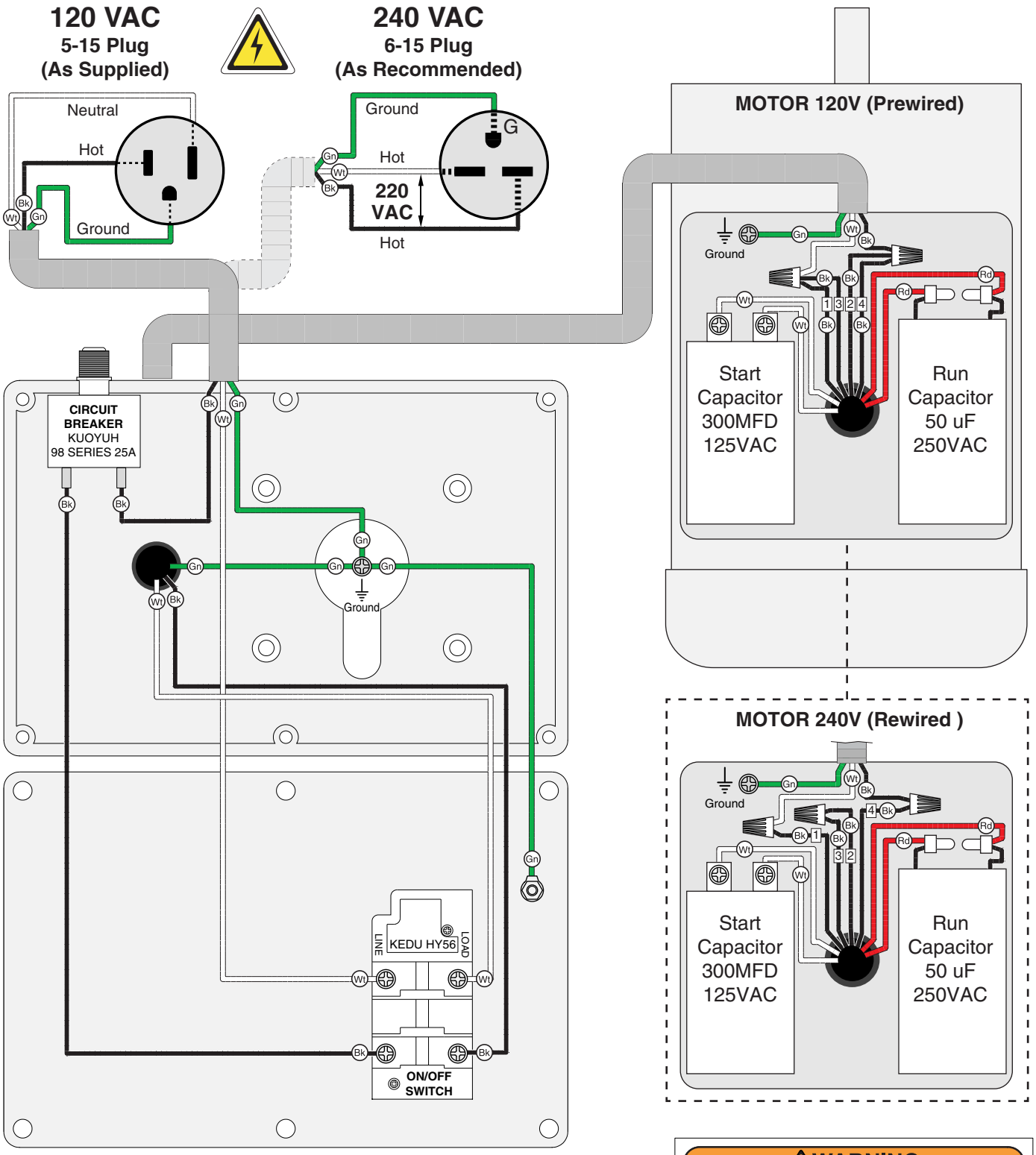

NOTICE

The motor wiring shown here is current at the time of printing, but it may not match your machine. Always use the wiring diagram inside the motor junction box.

NOTICE

You MUST purchase additional components to convert machine for the alternate voltage shown here. Purchase required plug from a local hardware store.

WARNING

SHOCK HAZARD!

Disconnect power before working on wiring!

STOP ***READ ELECTRICAL SAFETY ON PAGE 41!***

Main

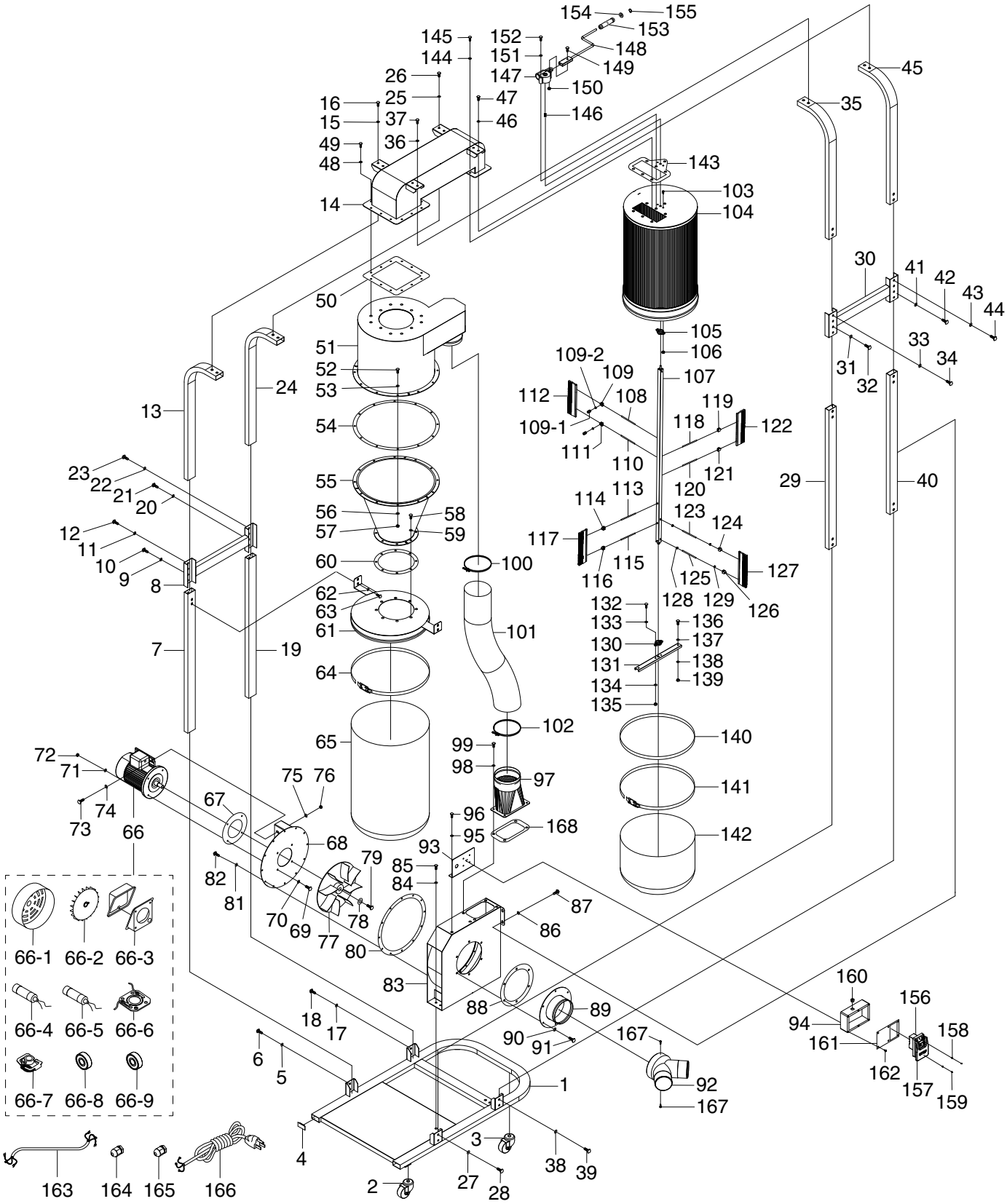

Main Parts List

REF	PART #	DESCRIPTION
1	P0852001	STAND BASE
2	P0852002	SWIVEL CASTER 3"
3	P0852003	SWIVEL CASTER 3" LOCKING
4	P0852004	TUBE END PLUG
5	P0852005	FENDER WASHER 5/16
6	P0852006	HEX BOLT 5/16-18 X 3/4
7	P0852007	FRONT LOWER LEG
8	P0852008	LEG BRACE
9	P0852009	FENDER WASHER 5/16
10	P0852010	HEX BOLT 5/16-18 X 3/4
11	P0852011	FENDER WASHER 5/16
12	P0852012	HEX BOLT 5/16-18 X 3/4
13	P0852013	UPPER LEG
14	P0852014	UPPER COVER
15	P0852015	FENDER WASHER 5/16
16	P0852016	HEX BOLT 5/16-18 X 3/4
17	P0852017	FENDER WASHER 5/16
18	P0852018	HEX BOLT 5/16-18 X 3/4
19	P0852019	LEFT REAR LOWER LEG
20	P0852020	FENDER WASHER 5/16
21	P0852021	HEX BOLT 5/16-18 X 3/4
22	P0852022	FENDER WASHER 5/16
23	P0852023	HEX BOLT 5/16-18 X 3/4
24	P0852024	UPPER LEG
25	P0852025	FENDER WASHER 5/16
26	P0852026	HEX BOLT 5/16-18 X 3/4
27	P0852027	FENDER WASHER 5/16
28	P0852028	HEX BOLT 5/16-18 X 3/4
29	P0852029	FRONT LOWER LEG
30	P0852030	LEG BRACE
31	P0852031	FENDER WASHER 5/16
32	P0852032	HEX BOLT 5/16-18 X 3/4
33	P0852033	FENDER WASHER 5/16
34	P0852034	HEX BOLT 5/16-18 X 3/4
35	P0852035	UPPER LEG
36	P0852036	FENDER WASHER 5/16
37	P0852037	HEX BOLT 5/16-18 X 3/4
38	P0852038	FENDER WASHER 5/16
39	P0852039	HEX BOLT 5/16-18 X 3/4
40	P0852040	RIGHT REAR LOWER LEG
41	P0852041	FENDER WASHER 5/16
42	P0852042	HEX BOLT 5/16-18 X 3/4
43	P0852043	FENDER WASHER 5/16
44	P0852044	HEX BOLT 5/16-18 X 3/4
45	P0852045	UPPER LEG
46	P0852046	FENDER WASHER 5/16
47	P0852047	HEX BOLT 5/16-18 X 3/4
48	P0852048	FENDER WASHER 5/16
49	P0852049	HEX BOLT 5/16-18 X 3/4
50	P0852050	UPPER COVER GASKET 11" X 11"
51	P0852051	INTAKE BARREL
52	P0852052	HEX BOLT 5/16-18 X 1
53	P0852053	FENDER WASHER 5/16

REF	PART #	DESCRIPTION
54	P0852054	CYCLONE FUNNEL GASKET
55	P0852055	CYCLONE FUNNEL
56	P0852056	FENDER WASHER 5/16
57	P0852057	HEX NUT 5/16-18
58	P0852058	HEX BOLT 5/16-18 X 3/4
59	P0852059	FLAT WASHER 5/16
60	P0852060	COLLECTION LID GASKET
61	P0852061	COLLECTION BAG LID
62	P0852062	FENDER WASHER 5/16
63	P0852063	HEX BOLT 5/16-18 X 3/4
64	P0852064	COLLECTION BAG CLAMP 17-3/4"
65	P0852065	COLLECTION BAG 17-3/4" X 35-1/2"
66	P0852066	MOTOR 1.5 HP 120V/240V 1-PH
66-1	P0852066-1	MOTOR FAN COVER
66-2	P0852066-2	MOTOR FAN
66-3	P0852066-3	MOTOR JUNCTION BOX
66-4	P0852066-4	S CAPACITOR 300M 125V 1-3/8 X 3-1/2
66-5	P0852066-5	R CAPACITOR 50M 250V 1-3/8 X 2-3/4
66-6	P0852066-6	CONTACT PLATE
66-7	P0852066-7	CENTRIFUGAL SWITCH
66-8	P0852066-8	BALL BEARING 6205ZZ
66-9	P0852066-9	BALL BEARING 6203ZZ
67	P0852067	MOTOR MOUNT GASKET
68	P0852068	IMPELLER COVER
69	P0852069	HEX BOLT 5/16-18 X 1
70	P0852070	FLAT WASHER 5/16
71	P0852071	FLAT WASHER 5/16
72	P0852072	LOCK NUT 5/16-18
73	P0852073	HEX BOLT 5/16-18 X 1
74	P0852074	FENDER WASHER 5/16
75	P0852075	FENDER WASHER 5/16
76	P0852076	LOCK NUT 5/16-18
77	P0852077	IMPELLER 12-1/2"
78	P0852078	IMPELLER WASHER 5/16 X 1-1/4 X 3/32
79	P0852079	HEX BOLT 5/16-18 X 1
80	P0852080	IMPELLER GASKET
81	P0852081	FENDER WASHER 5/16
82	P0852082	HEX BOLT 5/16-18 X 3/4
83	P0852083	IMPELLER HOUSING
84	P0852084	FENDER WASHER 5/16
85	P0852085	HEX BOLT 5/16-18 X 3/4
86	P0852086	FENDER WASHER 5/16
87	P0852087	HEX BOLT 5/16-18 X 3/4
88	P0852088	INLET PORT GASKET
89	P0852089	INLET PORT 6"
90	P0852090	FENDER WASHER 1/4
91	P0852091	HEX BOLT 1/4-20 X 3/4
92	P0852092	INLET ADAPTER 6" X 4" X 4"
93	P0852093	SWITCH BOX BRACKET
94	P0852094	SWITCH BOX
95	P0852095	FENDER WASHER 5/16
96	P0852096	HEX BOLT 5/16-18 X 3/4
97	P0852097	EXHAUST PORT

Main Parts List (Cont.)

REF	PART #	DESCRIPTION
98	P0852098	FENDER WASHER 5/16
99	P0852099	HEX BOLT 5/16-18 X 3/4
100	P0852100	HOSE CLAMP 6-1/2"
101	P0852101	FLEX HOSE 6" X 32-5/8"
102	P0852102	HOSE CLAMP 6-1/2"
103	P0852103	PHLP HD SCR 1/4-20 X 1-1/4
104	P0852104	CANISTER FILTER 17" X 26"
105	P0852105	PILLOW BLOCK BEARING
106	P0852106	LOCK NUT 1/4-20
107	P0852107	BRUSH SPINDLE
108	P0852108	STUD-FT 1/4-20 X 7
109	P0852109	BRUSH BRACKET
109-1	P0852109-1	SET SCREW M8-1.25 X 8 HOLLOW TIP
109-2	P0852109-2	PLASTIC TIP 6MM
110	P0852110	STUD-FT 1/4-20 X 7
111	P0852111	BRUSH BRACKET
112	P0852112	FILTER BRUSH (PVC)
113	P0852113	STUD-FT 1/4-20 X 7
114	P0852114	BRUSH BRACKET
115	P0852115	STUD-FT 1/4-20 X 7
116	P0852116	BRUSH BRACKET
117	P0852117	FILTER BRUSH (PVC)
118	P0852118	STUD-FT 1/4-20 X 7
119	P0852119	BRUSH BRACKET
120	P0852120	STUD-FT 1/4-20 X 7
121	P0852121	BRUSH BRACKET
122	P0852122	FILTER BRUSH (PVC)
123	P0852123	STUD-FT 1/4-20 X 7
124	P0852124	BRUSH BRACKET
125	P0852125	STUD-FT 1/4-20 X 7
126	P0852126	BRUSH BRACKET
127	P0852127	FILTER BRUSH (PVC)
128	P0852128	HEX NUT 1/4-20
129	P0852129	HEX NUT 1/4-20
130	P0852130	PILLOW BLOCK BEARING
131	P0852131	FILTER BRUSH BASE
132	P0852132	HEX BOLT 1/4-20 X 1

REF	PART #	DESCRIPTION
133	P0852133	FLAT WASHER 1/4
134	P0852134	FLAT WASHER 1/4
135	P0852135	LOCK NUT 1/4-20
136	P0852136	HEX BOLT 5/16-18 X 3/4
137	P0852137	FLAT WASHER 5/16
138	P0852138	FLAT WASHER 5/16
139	P0852139	LOCK NUT 5/16-18
140	P0852140	FOAM SEALING BAND
141	P0852141	FILTER BAG CLAMP 19"
142	P0852142	FILTER BAG 18" X 23-5/8"
143	P0852143	CANISTER FILTER GASKET
144	P0852144	FENDER WASHER 5/16
145	P0852145	HEX BOLT 1/4-20 X 3/4
146	P0852146	BRUSH SPINDLE BLOCK
147	P0852147	FILTER BRUSH GEAR
148	P0852148	FILTER BRUSH HANDLE
149	P0852149	HEX BOLT 5/16-18 X 1
150	P0852150	LOCK NUT 5/16-18
151	P0852151	FLAT WASHER 5/16
152	P0852152	HEX BOLT 5/16-18 X 2-1/2
153	P0852153	FILTER BRUSH ROTATING HANDLE
154	P0852154	FLAT WASHER 3/8
155	P0852155	EXT RETAINING RING 10MM
156	P0852156	ON/OFF SWITCH KEDU HY56
157	P0852157	STOP PADDLE KEDU HY56-P3
158	P0852158	STANDOFF HEX FF M3-.5 X 7
159	P0852159	PHLP HD SCR M3-.5 X 6
160	P0852160	STRAIN RELIEF TYPE-1 3/8"
161	P0852161	SWITCH BOX COVER
162	P0852162	TAP SCREW M5 X 12
163	P0852163	MOTOR CORD 12G 3W 18"
164	P0852164	STRAIN RELIEF TYPE-3 PG13.5
165	P0852165	STRAIN RELIEF TYPE-3 PG11
166	P0852166	POWER CORD 12G 3W 72" 5-15P
167	P0852167	PHLP HD SCR 10-24 X 1/2
168	P0852168	EXHAUST PORT GASKET

We do our best to stock replacement parts when possible, but we cannot guarantee that all parts shown are available for purchase. Call **(800) 523-4777** or visit **www.grizzly.com/parts** to check for availability.

Labels & Cosmetics

201

202

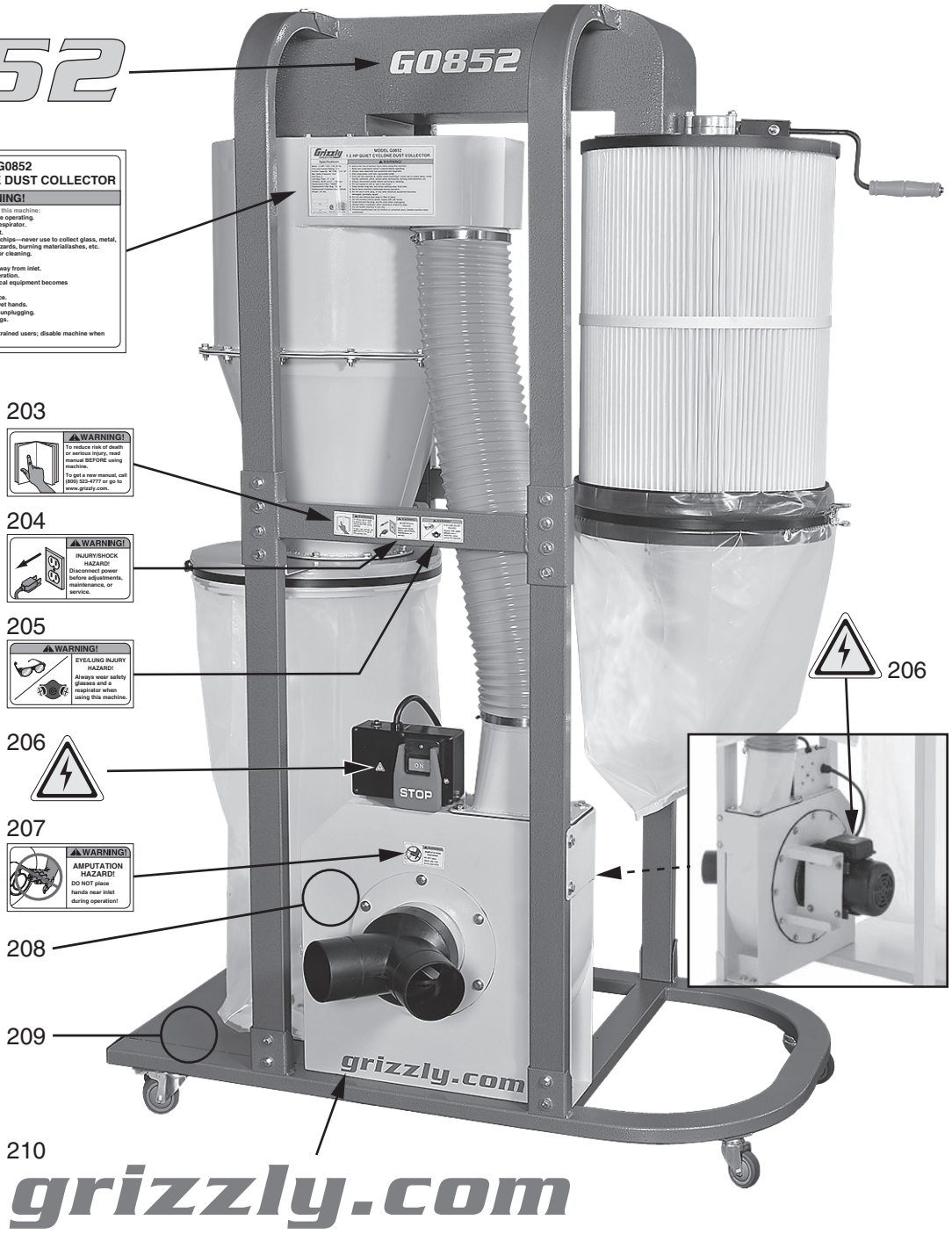

⚠WARNING

Safety labels help reduce the risk of serious injury caused by machine hazards. If any label comes off or becomes unreadable, the owner of this machine MUST replace it in the original location before resuming operations. For replacements, contact (800) 523-4777 or go to www.grizzly.com.

REF	PART #	DESCRIPTION
201	P0852201	MODEL NUMBER LABEL
202	P0852202	MACHINE ID LABEL
203	P0852203	READ MANUAL LABEL
204	P0852204	DISCONNECT POWER LABEL
205	P0852205	EYES-LUNGS WARNING LABEL

REF	PART #	DESCRIPTION
206	P0852206	ELECTRICITY LABEL
207	P0852207	AMPUTATION WARNING LABEL
208	P0852208	TOUCH-UP PAINT, GRIZZLY BEIGE
209	P0852209	TOUCH-UP PAINT, GRIZZLY GREEN
210	P0852210	GRIZZLY.COM LABEL

WARRANTY CARD

Name _____

Street _____

City _____ State _____ Zip _____

Phone # _____ Email _____

Model # _____ Order # _____ Serial # _____

The following information is given on a voluntary basis. It will be used for marketing purposes to help us develop better products and services. ***Of course, all information is strictly confidential.***

1. How did you learn about us?

____ Advertisement ____ Friend ____ Catalog
____ Card Deck ____ Website ____ Other:

2. Which of the following magazines do you subscribe to?

____ Cabinetmaker & FDM
____ Family Handyman
____ Hand Loader
____ Handy
____ Home Shop Machinist
____ Journal of Light Cont.
____ Live Steam
____ Model Airplane News
____ Old House Journal
____ Popular Mechanics
____ Popular Science
____ Popular Woodworking
____ Precision Shooter
____ Projects in Metal
____ RC Modeler
____ Rifle
____ Shop Notes
____ Shotgun News
____ Today's Homeowner
____ Wood
____ Wooden Boat
____ Woodshop News
____ Woodsmith
____ Woodwork
____ Woodworker West
____ Woodworker's Journal
____ Other:

3. What is your annual household income?

____ $20,000-$29,000 ____ $30,000-$39,000 ____ $40,000-$49,000
____ $50,000-$59,000 ____ $60,000-$69,000 ____ $70,000+

4. What is your age group?

____ 20-29 ____ 30-39 ____ 40-49
____ 50-59 ____ 60-69 ____ 70+

5. How long have you been a woodworker/metalworker?

____ 0-2 Years ____ 2-8 Years ____ 8-20 Years ____ 20+ Years

6. How many of your machines or tools are Grizzly?

____ 0-2 ____ 3-5 ____ 6-9 ____ 10+

7. Do you think your machine represents a good value? _____Yes _____No

8. Would you recommend Grizzly Industrial to a friend? _____Yes _____No

9. Would you allow us to use your name as a reference for Grizzly customers in your area?
Note: *We never use names more than 3 times.* _____Yes _____No

10. Comments: _____

_____

_____

_____

CUT ALONG DOTTED LINE

FOLD ALONG DOTTED LINE

Place
Stamp
Here

GRIZZLY INDUSTRIAL, INC.
P.O. BOX 2069
BELLINGHAM, WA 98227-2069

FOLD ALONG DOTTED LINE

Send a Grizzly Catalog to a friend:

Name_____

Street_____

City_____State_____Zip_____

TAPE ALONG EDGES--PLEASE DO NOT STAPLE

WARRANTY & RETURNS

Grizzly Industrial, Inc. warrants every product it sells for a period of **1 year** to the original purchaser from the date of purchase. This warranty does not apply to defects due directly or indirectly to misuse, abuse, negligence, accidents, repairs or alterations or lack of maintenance. This is Grizzly's sole written warranty and any and all warranties that may be implied by law, including any merchantability or fitness, for any particular purpose, are hereby limited to the duration of this written warranty. We do not warrant or represent that the merchandise complies with the provisions of any law or acts unless the manufacturer so warrants. In no event shall Grizzly's liability under this warranty exceed the purchase price paid for the product and any legal actions brought against Grizzly shall be tried in the State of Washington, County of Whatcom.

We shall in no event be liable for death, injuries to persons or property or for incidental, contingent, special, or consequential damages arising from the use of our products.

To take advantage of this warranty, contact us by mail or phone and give us all the details. We will then issue you a "Return Number,'' which must be clearly posted on the outside as well as the inside of the carton. We will not accept any item back without this number. Proof of purchase must accompany the merchandise.

The manufacturers reserve the right to change specifications at any time because they constantly strive to achieve better quality equipment. We make every effort to ensure that our products meet high quality and durability standards and we hope you never need to use this warranty.

Please feel free to write or call us if you have any questions about the machine or the manual.

Thank you again for your business and continued support. We hope to serve you again soon.