MODEL G0879
FLUX CORE MIG WELDER
OWNER'S MANUAL
(For models manufactured since 6/19)

Intertek
4009939

#SS22162 PRINTED IN CHINA
V1.12.21

⚠ WARNING!

This manual provides critical safety instructions on the proper setup, operation, maintenance, and service of this machine/tool. Save this document, refer to it often, and use it to instruct other operators.

Failure to read, understand and follow the instructions in this manual may result in fire or serious personal injury—including amputation, electrocution, or death.

The owner of this machine/tool is solely responsible for its safe use. This responsibility includes but is not limited to proper installation in a safe environment, personnel training and usage authorization, proper inspection and maintenance, manual availability and comprehension, application of safety devices, cutting/sanding/grinding tool integrity, and the usage of personal protective equipment.

The manufacturer will not be held liable for injury or property damage from negligence, improper training, machine modifications or misuse.

⚠ WARNING!

Some dust created by power sanding, sawing, grinding, drilling, and other construction activities contains chemicals known to the State of California to cause cancer, birth defects or other reproductive harm. Some examples of these chemicals are:

- **Lead from lead-based paints.**
- **Crystalline silica from bricks, cement and other masonry products.**
- **Arsenic and chromium from chemically-treated lumber.**

Your risk from these exposures varies, depending on how often you do this type of work. To reduce your exposure to these chemicals: Work in a well ventilated area, and work with approved safety equipment, such as those dust masks that are specially designed to filter out microscopic particles.

Table of Contents

INTRODUCTION

Contact Info

We stand behind our machines! If you have questions or need help, contact us with the information below. Before contacting, make sure you get the **serial number** and **manufacture date** from the machine ID label. This will help us help you faster.

Grizzly Technical Support
1815 W. Battlefield
Springfield, MO 65807
Phone: (570) 546-9663
Email: techsupport@grizzly.com

We want your feedback on this manual. What did you like about it? Where could it be improved? Please take a few minutes to give us feedback.

Grizzly Documentation Manager
P.O. Box 2069
Bellingham, WA 98227-2069
Email: manuals@grizzly.com

Manual Accuracy

We are proud to provide a high-quality owner's manual with your new machine!

We made every effort to be exact with the instructions, specifications, drawings, and photographs in this manual. Sometimes we make mistakes, but our policy of continuous improvement also means that **sometimes the machine you receive is slightly different than shown in the manual**.

If you find this to be the case, and the difference between the manual and machine leaves you confused or unsure about something, check our website for an updated version. We post current manuals and manual updates for free on our website at **www.grizzly.com**.

Alternatively, you can call our Technical Support for help. Before calling, make sure you write down the **manufacture date** and **serial number** from the machine ID label (see below). This information is required for us to provide proper tech support, and it helps us determine if updated documentation is available for your machine.

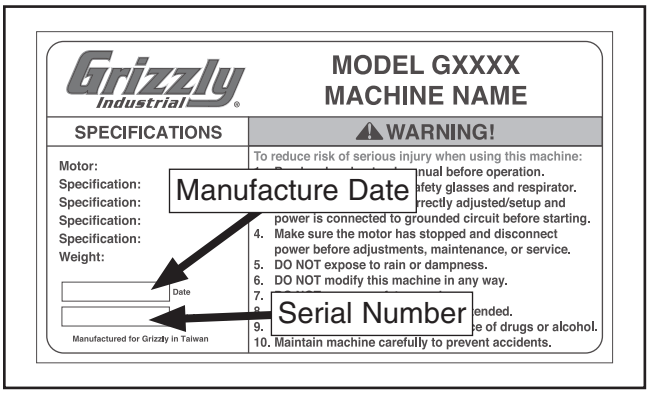

Identification

Become familiar with the names and locations of the controls and features shown below to better understand the instructions in this manual.

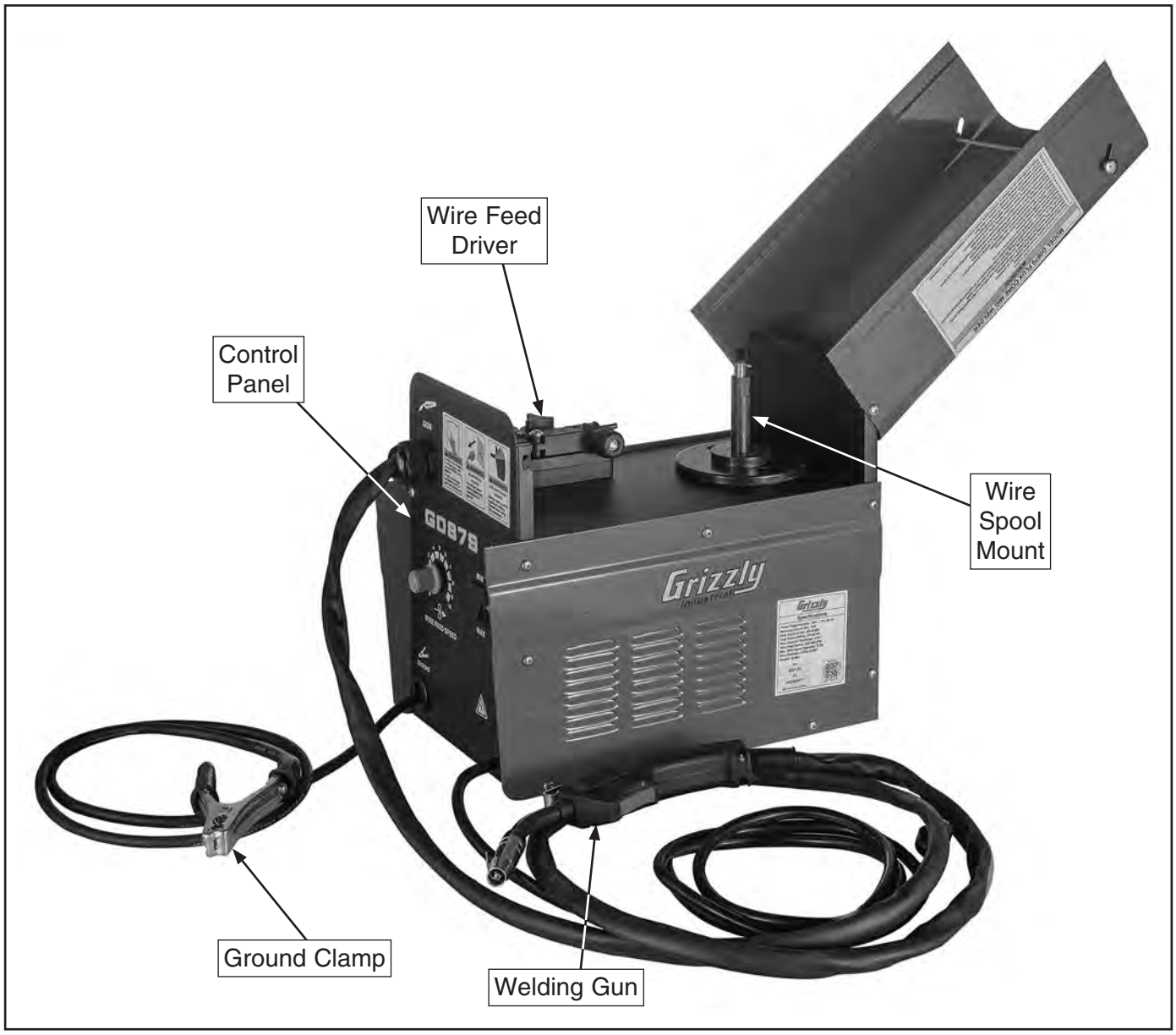

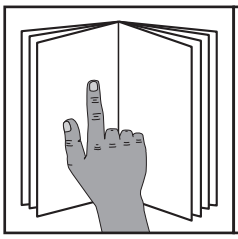

WARNING

To reduce your risk of serious injury, read this entire manual BEFORE using machine.

Controls & Components

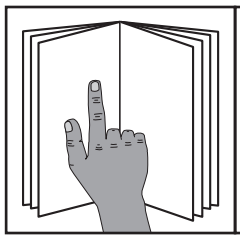

⚠WARNING

To reduce your risk of serious injury, read this entire manual BEFORE using machine.

Control Panel

Figure 1. Control panel.

A. Thermal Overload Indicator Light: Orange light will illuminate when welder has exceeded duty cycle and needs to cool down (see **Welder Duty Cycle** on **Page 22**). DO NOT unplug machine when light is on, to allow fan to cool machine down.

B. Wire Feed Speed Dial: Adjusts wire output speed from welding gun.

C. MIN/MAX Power Switch: Switches machine between its minimum and maximum output amperage settings. MIN setting will yield a 60A output, and MAX will yield 70A output.

D. ON/OFF Switch: Turns machine ***ON*** and ***OFF***.

Welding Gun

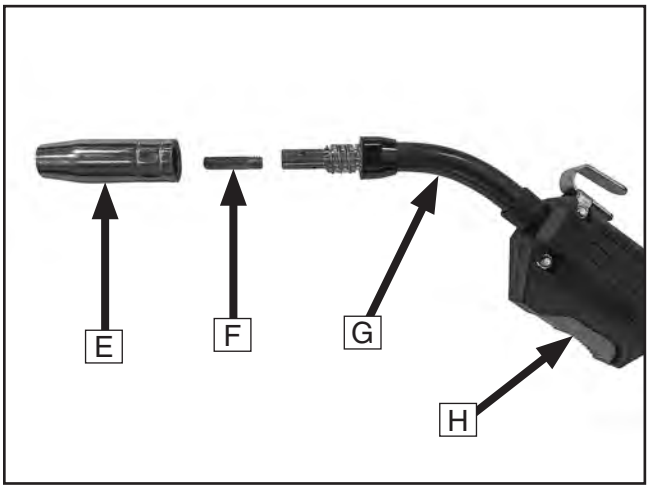

Figure 2. Welding gun components.

E. Nozzle: Protects contact tip.

F. Contact Tip: Creates electrical connection with welding wire as it is fed through.

G. Welding Gun: Controls welding wire output and holds consumable electrode/welding wire.

H. Trigger: Actuates wire feed driver.

Ground Clamp

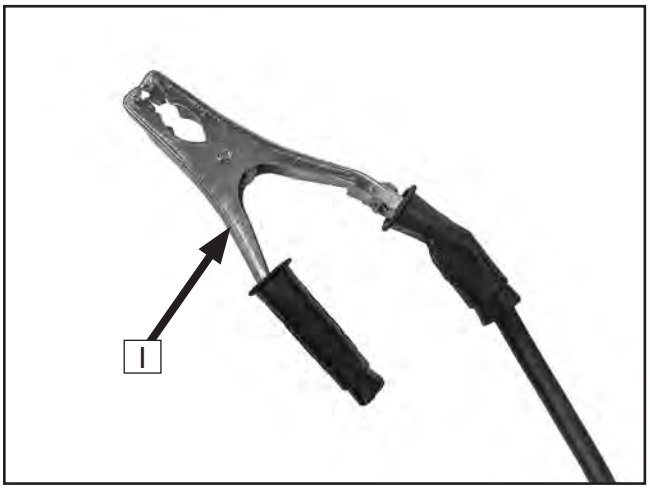

Figure 3. Ground clamp.

I. Ground Clamp: Connects workpiece to welding circuit.

Wire Feed Driver

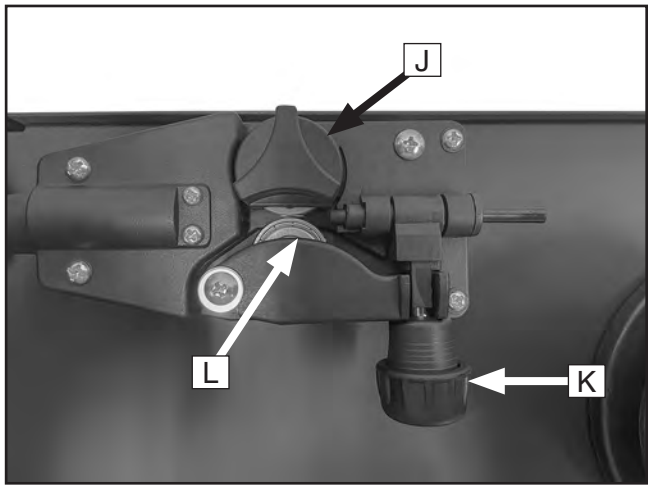

Figure 4. Wire feed driver components.

J. Wire Drive Roller: Has grooves for 0.030" and 0.035" wire gauges. Driven by motor to deliver wire from spool through gun.

K. Tension Knob: Adjusts wire feed tension.

L. Tension Roller: Applies tension to wire by pressing against drive roller. Amount of tension can be adjusted with tension knob.

Wire Spool Mount

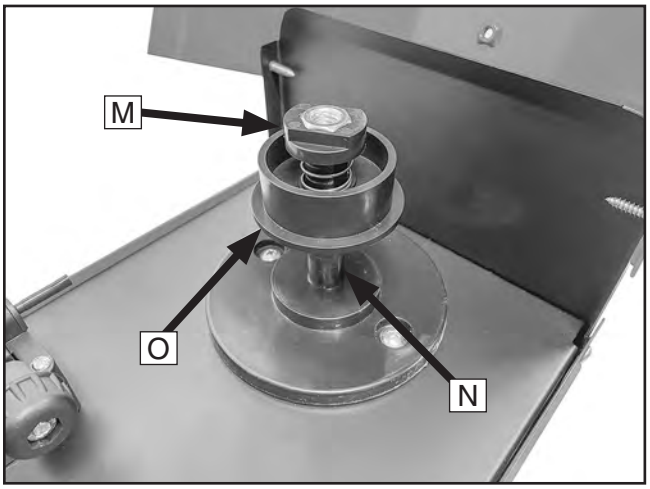

Figure 5. Wire spool mount components.

M. Spool Nut: Adjusts wire spool tension.

N. Spool Spindle: Applies tension to wire spool when spool nut is tightened.

O. Spool Collar: Secures wire spool on spindle.

Additional Sources for Welding Codes and Standards

American Conference of Government Industrial Hygienists (ACGIH), 1330 Kemper Meadow Drive, Suite 600, Cincinnati, OH 45240-1634, (513) 742-2020, Website: *www.acgih.org*.
—Threshold Limit Values (Booklet)

American National Standards Institute (ANSI), 11 West 42nd Street, New York, NY 10036-8002, (212) 642-4900, Website: *www.ansi.org*.
—Practice for Occupational and Educational Eye and Face Protection, ANSI Standard Z87.1

American Welding Society, 550 N.W. LeJeune Road, Miami, FL 33126, (305) 443-9353, Website: *www.aws.org*.
—Safety in welding, Cutting, and Allied Processes, ANSI Standard Z49.1
—Recommended Safe Practices for the Preparation for Welding and Cutting of Containers and Piping, AWS F4.1

Canadian Standards Association, Standards Sales, 178 Rexdale Boulevard, Rexdale, Ontario, Canada M9W 1R3, (800) 463-6727, Website: *www.csa-international.org*.
—Code for Safety in Welding and Cutting, CSA Standard W117.2

Compressed Gas Association, 1735 Jefferson Davis Highway, Suite 1004, Arlington, VA 22202-4102, (703) 412-0900, Website: *www.cganet.com*.
—Safe Handling of Compressed Gases in Cylinders, CGA Pamphlet P-1

National Fire Protection Association, P. O. Box 9101, 1 Battery March Park, Quincy, MA 02269-9101, (617) 770-3000, Website: *www.nfpa.org* and *www.sparky.org*.
—National Electrical Code, NFPA Standard 70
—Standard for Fire Prevention During Welding, Cutting, and Other Hot Work, NFPA Standard 51B

U. S. Government Printing Office, Superintendent of Documents, P. O. Box 371954, Pittsburgh, PA 15250 (312) 353-2220, Website: *www.osha.gov*.
—OSHA, Occupational Safety and Health Standards for General Industry, Title 29, Code of Federal Regulations (CFR), Part 1910, Subpart Q, and Part 1929, Subpart J

⚠WARNING

Like all equipment there is potential danger when operating this welder. Accidents are frequently caused by lack of familiarity or failure to pay attention. Use this welder with respect and caution to reduce the possibility of operator injury. If normal safety precautions are overlooked or ignored, serious personal injury may occur.

⚠CAUTION

No list of safety guidelines can be complete. Every shop environment is different. Always consider safety first, as it applies to your individual working conditions. Use this and other equipment with caution and respect. Failure to do so could result in serious personal injury, damage to equipment, or poor work results.

MACHINE DATA SHEET

Customer Service #: (570) 546-9663 · To Order Call: (800) 523-4777 · Fax #: (800) 438-5901

MODEL G0879
FLUX CORE MIG WELDER

Product Dimensions:

Weight	33 lbs.
Width (side-to-side) x Depth (front-to-back) x Height	8-1/2 x 15 x 14 in.

Shipping Dimensions:

Type	Cardboard
Content	Machine
Weight	36 lbs.
Length x Width x Height	21 x 13 x 15 in.
Must Ship Upright	Yes

Electrical:

Power Requirement	110V, Single-Phase, 60 Hz
Minimum Circuit Size	20A
Output Current / Duty Cycle (LOW)	20% @ 60A
Output Current / Duty Cycle (HIGH)	10% @ 70A
Power Cord Length	7 ft.
Power Cord Gauge	14 AWG
Included Plug Type	5-15
Switch Type	ON/OFF Rocker

Operation Information:

Minimum Material Thickness	1/16 in.
Maximum Material Thickness	3/16 in.
Wire Feed Speed Range (Inches per Minute)	200 - 600 IPM
Wire Diameter Range	0.030, 0.035 in.
Maximum Wire Spool Diameter	4 in.
Torch Cable Length	7 ft.
Ground Cable Length	6-1/2 ft.

Other Specifications:

Country of Origin	China
Warranty	1 Year
Approximate Assembly & Setup Time	15 Minutes
Serial Number Location	Machine ID Label
Housing Protection Class	IP21S
ISO 9001 Factory	Yes
Certified by a Nationally Recognized Testing Laboratory (NRTL)	Yes

Features:

Adjustable Wire Speed Control
Low 60A and High 70A Modes
Capable of Welding Steel and Stainless Steel

Accessories:

Brush/Chipping Hammer
0.030 in. & 0.035 in. Tips
1 lb. of 0.035 in. Flux Wire

SECTION 1: SAFETY

For Your Own Safety, Read Instruction Manual Before Operating This Machine

The purpose of safety symbols is to attract your attention to possible hazardous conditions. This manual uses a series of symbols and signal words intended to convey the level of importance of the safety messages. The progression of symbols is described below. Remember that safety messages by themselves do not eliminate danger and are not a substitute for proper accident prevention measures. Always use common sense and good judgment.

DANGER	**Indicates an imminently hazardous situation which, if not avoided, WILL result in death or serious injury.**
WARNING	**Indicates a potentially hazardous situation which, if not avoided, COULD result in death or serious injury.**
CAUTION	**Indicates a potentially hazardous situation which, if not avoided, MAY result in minor or moderate injury. It may also be used to alert against unsafe practices.**
NOTICE	**Alerts the user to useful information about proper operation of the machine to avoid machine damage.**

Safety Instructions for Machinery

WARNING

OWNER'S MANUAL. Read and understand this owner's manual BEFORE using machine.

TRAINED OPERATORS ONLY. Untrained operators have a higher risk of being hurt or killed. Only allow trained/supervised people to use this machine. When machine is not being used, disconnect power, remove switch keys, or lock-out machine to prevent unauthorized use—especially around children. Make your workshop kid proof!

DANGEROUS ENVIRONMENTS. Do not use machinery in areas that are wet, cluttered, or have poor lighting. Operating machinery in these areas greatly increases the risk of accidents and injury.

MENTAL ALERTNESS REQUIRED. Full mental alertness is required for safe operation of machinery. Never operate under the influence of drugs or alcohol, when tired, or when distracted.

ELECTRICAL EQUIPMENT INJURY RISKS. You can be shocked, burned, or killed by touching live electrical components or improperly grounded machinery. To reduce this risk, only allow qualified service personnel to do electrical installation or repair work, and always disconnect power before accessing or exposing electrical equipment.

DISCONNECT POWER FIRST. Always disconnect machine from power supply BEFORE making adjustments, changing tooling, or servicing machine. This prevents an injury risk from unintended startup or contact with live electrical components.

EYE PROTECTION. Always wear ANSI-approved safety glasses or a face shield when operating or observing machinery to reduce the risk of eye injury or blindness from flying particles. Everyday eyeglasses are NOT approved safety glasses.

⚠WARNING

WEARING PROPER APPAREL. Do not wear clothing, apparel or jewelry that can become entangled in moving parts. Always tie back or cover long hair. Wear non-slip footwear to reduce risk of slipping and losing control or accidentally contacting cutting tool or moving parts.

HAZARDOUS DUST. Dust created by machinery operations may cause cancer, birth defects, or long-term respiratory damage. Be aware of dust hazards associated with each workpiece material. Always wear a NIOSH-approved respirator to reduce your risk.

HEARING PROTECTION. Always wear hearing protection when operating or observing loud machinery. Extended exposure to this noise without hearing protection can cause permanent hearing loss.

REMOVE ADJUSTING TOOLS. Tools left on machinery can become dangerous projectiles upon startup. Never leave chuck keys, wrenches, or any other tools on machine. Always verify removal before starting!

USE CORRECT TOOL FOR THE JOB. Only use this tool for its intended purpose—do not force it or an attachment to do a job for which it was not designed. Never make unapproved modifications—modifying tool or using it differently than intended may result in malfunction or mechanical failure that can lead to personal injury or death!

AWKWARD POSITIONS. Keep proper footing and balance at all times when operating machine. Do not overreach! Avoid awkward hand positions that make workpiece control difficult or increase the risk of accidental injury.

CHILDREN & BYSTANDERS. Keep children and bystanders at a safe distance from the work area. Stop using machine if they become a distraction.

GUARDS & COVERS. Guards and covers reduce accidental contact with moving parts or flying debris. Make sure they are properly installed, undamaged, and working correctly BEFORE operating machine.

FORCING MACHINERY. Do not force machine. It will do the job safer and better at the rate for which it was designed.

NEVER STAND ON MACHINE. Serious injury may occur if machine is tipped or if the cutting tool is unintentionally contacted.

STABLE MACHINE. Unexpected movement during operation greatly increases risk of injury or loss of control. Before starting, verify machine is stable and mobile base (if used) is locked.

USE RECOMMENDED ACCESSORIES. Consult this owner's manual or the manufacturer for recommended accessories. Using improper accessories will increase the risk of serious injury.

UNATTENDED OPERATION. To reduce the risk of accidental injury, turn machine ***OFF*** and ensure all moving parts completely stop before walking away. Never leave machine running while unattended.

MAINTAIN WITH CARE. Follow all maintenance instructions and lubrication schedules to keep machine in good working condition. A machine that is improperly maintained could malfunction, leading to serious personal injury or death.

DAMAGED PARTS. Regularly inspect machine for damaged, loose, or mis-adjusted parts—or any condition that could affect safe operation. Immediately repair/replace BEFORE operating machine. For your own safety, DO NOT operate machine with damaged parts!

MAINTAIN POWER CORDS. When disconnecting cord-connected machines from power, grab and pull the plug—NOT the cord. Pulling the cord may damage the wires inside. Do not handle cord/plug with wet hands. Avoid cord damage by keeping it away from heated surfaces, high traffic areas, harsh chemicals, and wet/damp locations.

EXPERIENCING DIFFICULTIES. If at any time you experience difficulties performing the intended operation, stop using the machine! Contact our Technical Support at (570) 546-9663.

Additional Safety for Welders

⚠WARNING

Serious injury, burns, electric shock, or death can occur from misuse of the welder. Welding fumes can cause suffocation or poisoning if operating in an enclosed space. Arc rays can cause eye injury. Sparks and spatter can cause nearby flammable materials to ignite. To reduce the risks of welding, anyone operating this machine MUST completely heed the hazards and warnings below.

WELDING FUMES. Breathing welding fumes can cause suffocation or poisoning without warning. Keep your head out of welding fumes. Use adequate ventilation at arc to safely remove fumes from your breathing zone and general area. Use ANSI-approved respirators recommended for type of welding operation. Protect others from these fumes.

ELECTRIC SHOCK. Connect welder to power source with approved earth ground. Make sure all electrical connections are tight, clean, and dry. Connect workpiece to approved earth ground. Work lead is NOT a ground connection and is to be used only to complete working welding circuit. Welding in wet and humid conditions drastically increases risk of electrical shock.

PREVENT FIRES. Keep welding work zones clear of flammable liquids, such as gasoline and solvents; combustible solids, such as paper and wood; and flammable gases, such as acetylene and hydrogen. Provide approved fire barriers and fire extinguishing equipment for welding zone of at least 35' radius. Stay alert for sparks and spatter thrown into cracks and crevices that can start smoldering fire.

HANDLING GAS CYLINDERS. Regardless of content, pressurized gas cylinders can explode. Always secure protector cap in place over outlet valve assembly when moving cylinder. Broken valve could release pressurized contents and cause cylinder to be hurled about at dangerously high speeds, causing serious property damage, personal injury, or death. Always use safe methods when moving gas cylinders. Secure gas cylinder to wall or approved cylinder cart with chain before using or storing.

PROTECTING GAS CYLINDERS. Excessive heat can cause pressurized gas to expand and explode cylinder. Never weld on gas cylinder. Damaging cylinder can cause cylinder to crack and explode. Exploding pressurized gas cylinders can cause serious property damage, personal injury, or death.

WORK AREA. Keep working area clear of any material not involved in welding operation. Keep all equipment, workpieces, and work surfaces clean, dry, and free of entanglements. Keep lead cables organized and away from your body.

WORKPIECE. Take proper precautions and think about workpiece you are welding on. Welding certain treated metals, such as galvanized steel, can create severely toxic fumes. DO NOT weld, burn, or heat sealed or pressurized containers. Observe specific guidelines when welding workpiece to ensure safe practice has not been overlooked.

ARC BURNS, SPARKS, SPATTER, AND HOT MATERIALS. Welding without complete and approved body protection can cause severe damage to eyes and body. Wear non-flammable protective clothing, welding gloves, cap, long-sleeve shirt, cuffless pants, and leather boots. DO NOT wear jewelry or frayed clothing. Use welding helmet with correct shade of filter for operation. Protect bystanders and property in working zone from exposure to arc radiation, sparks, and spatter. Welding operations create extreme amounts of heat. Make sure to allow for cooling before handling welded materials.

WELDING IN CONFINED SPACES. Always open all covers, sustain forced ventilation, remove toxic and hazardous materials, and provide a power disconnect to the welder inside the work space. Always work with someone who can give you help from outside the space. Welding can displace oxygen. Always check for safe breathing atmosphere and provide air-supplied respirators if necessary. Keep in mind that all normal welding hazards are intensified in a confined space.

ELECTROMAGNETIC FIELDS (EMF). Welding operations create EMF around welding equipment and workpieces. Operators with pacemakers must consult their physician before using this equipment, or being within 50 feet of welding operations.

SECTION 2: POWER SUPPLY

Availability

Before installing the machine, consider the availability and proximity of the required power supply circuit. If an existing circuit does not meet the requirements for this machine, a new circuit must be installed. To minimize the risk of electrocution, fire, or equipment damage, installation work and electrical wiring must be done by an electrician or qualified service personnel in accordance with all applicable codes and standards.

⚠WARNING

Electrocution, fire, shock, or equipment damage may occur if machine is not properly grounded and connected to power supply.

Full-Load Current Rating

The full-load current rating is the amperage a machine draws at 100% of the rated output power. On machines with multiple motors, this is the amperage drawn by the largest motor or sum of all motors and electrical devices that might operate at one time during normal operations.

Full-Load Current Rating at 110V..... 20 Amps

The full-load current is not the maximum amount of amps that the machine will draw. If the machine is overloaded, it will draw additional amps beyond the full-load rating.

If the machine is overloaded for a sufficient length of time, damage, overheating, or fire may result—especially if connected to an undersized circuit. To reduce the risk of these hazards, avoid overloading the machine during operation and make sure it is connected to a power supply circuit that meets the specified circuit requirements.

⚠WARNING

Serious injury could occur if you connect machine to power before completing setup process. DO NOT connect to power until instructed later in this manual.

110V Circuit Requirements

This machine is prewired to operate on a power supply circuit that has a verified ground and meets the following requirements:

Voltage..... 110V, 115V, 120V
Cycle .....60 Hz
Phase ..... Single-Phase
Power Supply Circuit ..... 20 Amps

A power supply circuit includes all electrical equipment between the breaker box or fuse panel in the building and the machine. The power supply circuit used for this machine must be sized to safely handle the full-load current drawn from the machine for an extended period of time. (If this machine is connected to a circuit protected by fuses, use a time delay fuse marked D.)

⚠CAUTION

For your own safety and protection of property, consult an electrician if you are unsure about wiring practices or electrical codes in your area.

Note: *Circuit requirements in this manual apply to a dedicated circuit—where only one machine will be running on the circuit at a time. If machine will be connected to a shared circuit where multiple machines may be running at the same time, consult an electrician or qualified service personnel to ensure circuit is properly sized for safe operation.*

Grounding & Plug Requirements

This machine MUST be grounded. In the event of certain malfunctions or breakdowns, grounding reduces the risk of electric shock by providing a path of least resistance for electric current.

This machine is equipped with a power cord that has an equipment-grounding wire and a grounding plug. Only insert plug into a matching receptacle (outlet) that is properly installed and grounded in accordance with all local codes and ordinances. DO NOT modify the provided plug!

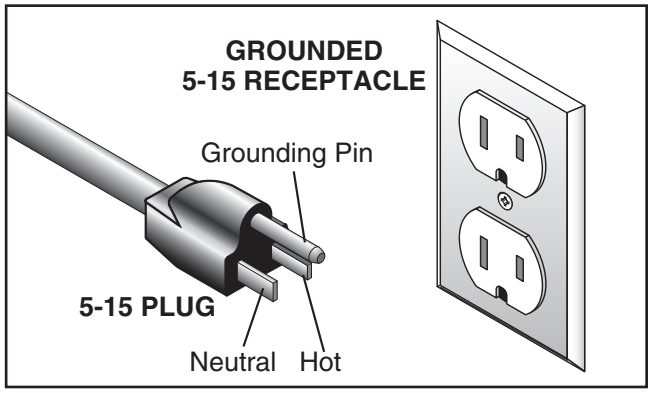

Figure 6. Typical 5-15 plug and receptacle.

⚠CAUTION

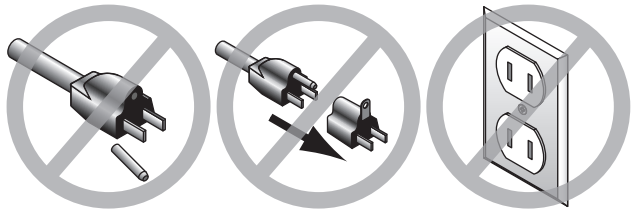

SHOCK HAZARD!
Two-prong outlets do not meet the grounding requirements for this machine. Do not modify or use an adapter on the plug provided—if it will not fit the outlet, have a qualified electrician install the proper outlet with a verified ground.

Improper connection of the equipment-grounding wire can result in a risk of electric shock. The wire with green insulation (with or without yellow stripes) is the equipment-grounding wire. If repair or replacement of the power cord or plug is necessary, do not connect the equipment-grounding wire to a live (current carrying) terminal.

Check with a qualified electrician or service personnel if you do not understand these grounding requirements, or if you are in doubt about whether the tool is properly grounded. If you ever notice that a cord or plug is damaged or worn, disconnect it from power, and immediately replace it with a new one.

Extension Cords

We do not recommend using an extension cord with this machine. If you must use an extension cord, only use it if absolutely necessary and only on a temporary basis.

Extension cords cause voltage drop, which can damage electrical components and shorten motor life. Voltage drop increases as the extension cord size gets longer and the gauge size gets smaller (higher gauge numbers indicate smaller sizes).

Any extension cord used with this machine must be in good condition and contain a ground wire and matching plug/receptacle. Additionally, it must meet the following size requirements:

Minimum Gauge Size .....12 AWG
Maximum Length (Shorter is Better).....25 ft.

Grounding for Welding Safety

There are two or more electrical circuits involved in any welding operation. The practice of safely grounding these circuits is documented in various codes and standards (refer to **Additional Sources for Welding Codes and Standards** on **Page 6**).

Welding Machine Ground

When properly connected to a power source, the Model G0879 welder is grounded through the power cord and power grid. The internal welding circuit of the welder is insulated from the external enclosure. However, to avoid shocking hazards if this internal insulation fails, you must establish a separate earth ground for the welder's external enclosure. This ground will ensure that if a short does occur and the metal enclosure becomes integrated with the welding current, the current will safely dissipate directly through the ground instead of through you.

Note: *Refer to the publication NFPA 70, National Electric Code, Article 250, Grounding, and your local electrical codes for the correct method of establishing this ground.*

⚠WARNING

Wire-feed welders use a high frequency current that creates a high electromagnetic field (EMF) around the welder. EMF disrupts electronic devices. To avoid damage, keep electronic devices at least 50 feet from the welder when it is powered *ON*. Workers who have pacemakers must consult with their physician before using this equipment or being within 50 feet of welding operations.

Workpiece Ground

The incoming power circuit to the welder and the working welding circuit are two separate circuits that must have separate grounds. The welding circuit consists of the internal components of the welder, the welding cables, the electrode holder/gun assembly, the work clamp, and the workpiece.

ANSI Welding Standards (Z49.1, 11.3.2.1) specify that "Grounding [of the workpiece] shall be done by locating the work on a grounded metal floor or platen, or by connection to a grounded building frame or other satisfactory ground."

⚠WARNING

Always ensure that the ground for the incoming power circuit to the welder and the ground for the working welding circuit are never connected. Failure to comply with this warning could result in death, serious personal injury, or property damage.

However, you must also avoid "double grounding" the workpiece. ANSI Z49.1 states that "Care shall be taken to avoid the flow of welding current through a connection intended only for safety grounding since the welding current may be of a higher magnitude than the grounding conductor can safely carry."

Note: *The work lead from the welder is sometimes incorrectly referred to as the "ground lead." The work lead from the welder is NOT a ground. The work lead and the ground connection to the workpiece are separate and must NOT be connected in any way.*

SECTION 3: SETUP

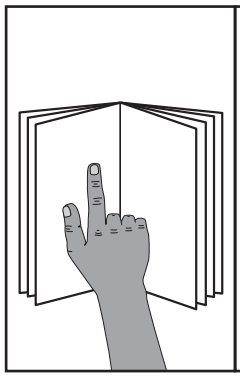

⚠WARNING

This machine presents serious injury hazards to untrained users. Read through this entire manual to become familiar with the controls and operations before starting the machine!

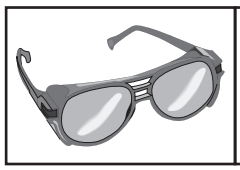

⚠WARNING

Wear safety glasses during the entire setup process!

Unpacking

This machine was carefully packaged for safe transport. When unpacking, separate all enclosed items from packaging materials and inspect them for shipping damage. ***If items are damaged, please call us immediately at (570) 546-9663.***

IMPORTANT: Save all packaging materials until you are completely satisfied with the machine and have resolved any issues between Grizzly or the shipping agent. *You MUST have the original packaging to file a freight claim. It is also extremely helpful if you need to return your machine later.*

Needed for Setup

The following items are needed, but not included, for the setup/assembly of this machine.

Description	Qty
• Phillips Screwdriver #2	1
• Needle-Nose Pliers	1
• Safety Glasses	1

Inventory

The following is a list of items shipped with your machine. Before beginning setup, lay these items out and inventory them.

If any non-proprietary parts are missing (e.g. a nut or a washer), we will gladly replace them; or for the sake of expediency, replacements can be obtained at your local hardware store.

Loose Parts (Figure 7)	Qty
A. Face Shield	1
B. Face Shield Handle	1
C. Machine Handle	1
D. Flux Core Wire Roll (0.035 in.)	1
E. Slag Hammer/Wire Brush	1
F. Spare Face Shield Lens	1

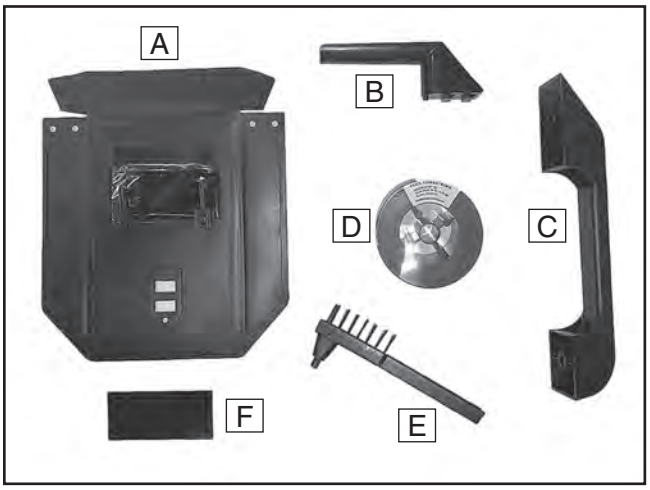

Figure 7. Inventory.

NOTICE

If you cannot find an item on this list, carefully check around/inside the machine and packaging materials. Often, these items get lost in packaging materials while unpacking or they are pre-installed at the factory.

Hardware Bag (Figure 8)	Qty
G. Spool Collar	1
H. Contact Tips (0.030", 0.035")	1
I. Phillips Head Screws M5-.8 X 20	2
—Lock Washers 5mm	2
—Flat Washers 5mm	2
J. Spare Fuses 5A 250V	2
K. Compression Spring 1 X 20 X 18	1
L. Spool Nut M10-1.5	1

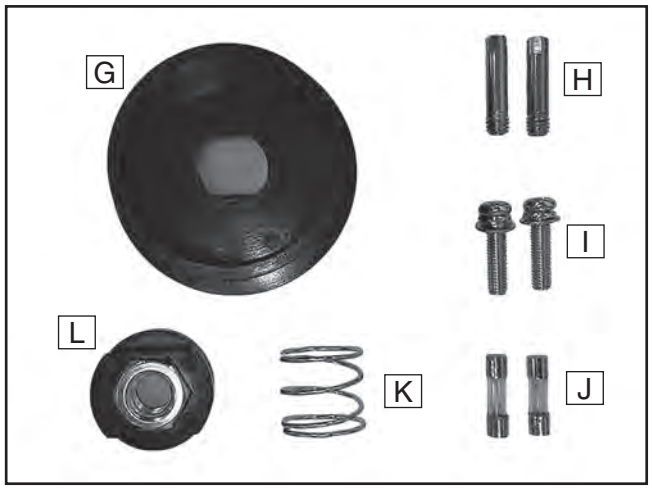

Figure 8. Hardware bag.

Site Considerations

Workbench Load

Refer to the **Machine Data Sheet** for the weight and footprint specifications of your machine. Some workbenches may require additional reinforcement to support the weight of the machine and workpiece materials.

Placement Location

Consider anticipated workpiece sizes and additional space needed for auxiliary stands, work tables, or other machinery when establishing a location for this machine in the shop. Below is the minimum amount of space needed for the machine.

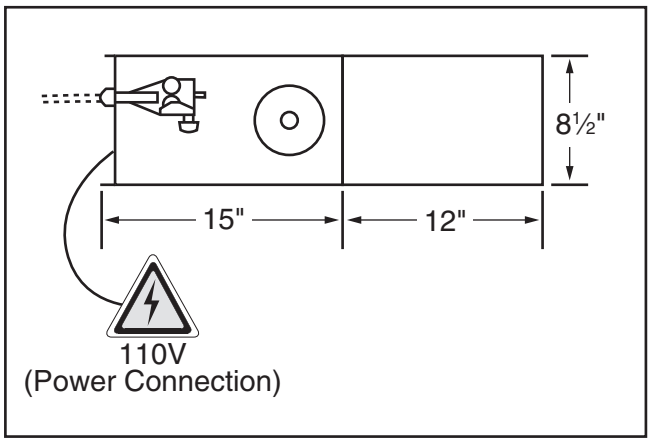

Figure 9. Machine clearances.

Electrical Installation

Place this machine near an existing power source. Make sure all power cords are protected from traffic, material handling, moisture, chemicals, or other hazards. Make sure to leave enough space around machine to disconnect power supply or apply a lockout/tagout device, if required.

Assembly

The machine must be fully assembled before it can be operated. Before beginning the assembly process, refer to **Needed for Setup** on **Page 14** and gather all listed items.

To assemble machine:

1. Install handle using (2) Phillips head screws with pre-installed lock washers and flat washers (see **Figure 10**).

2. Slide latch back to lift top cover and expose wire spool spindle and feed mechanism (see **Figure 10**).

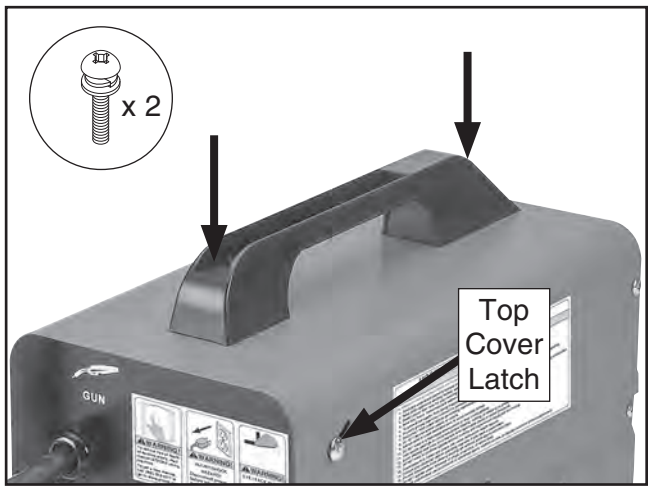

Figure 10. Handle installed.

3. Install wire roll on spool spindle so spool will feed counterclockwise.

4. Secure wire spool using spool collar, compression spring, and spool nut (see **Figure 11**). Wire spool should have some resistance but rotate freely.

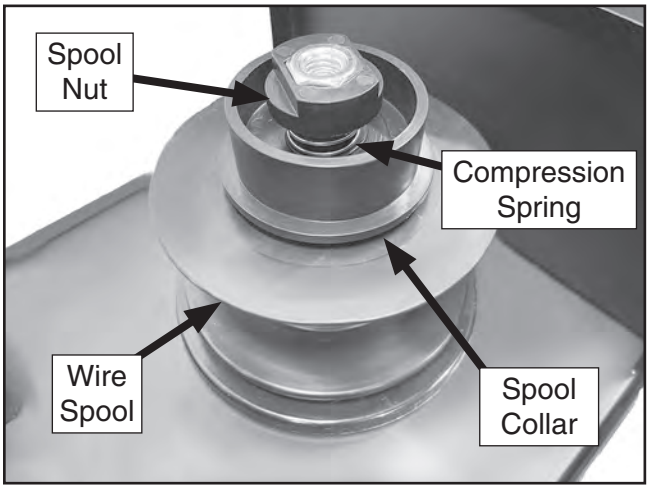

Figure 11. Wire spool installed.

5. Assemble face shield by folding edges and snapping together. Install face shield handle by snapping it to front of face shield.

Test Run

Once assembly is complete, test run the machine to ensure it is properly connected to power and safety components are functioning correctly.

If you find an unusual problem during the test run, immediately stop the machine, disconnect it from power, and fix the problem BEFORE operating the machine again. The **Troubleshooting** table in the **SERVICE** section of this manual can help.

The Test Run consists of verifying that the motor powers up and runs correctly.

⚠WARNING

Serious injury or death can result from using this machine BEFORE understanding its controls and related safety information. DO NOT operate, or allow others to operate, machine until the information is understood.

⚠WARNING

DO NOT start machine until all preceding setup instructions have been performed. Operating an improperly set up machine may result in malfunction or unexpected results that can lead to serious injury, death, or machine/property damage.

⚠WARNING

Damage to your eyes and lungs could result from using this machine without proper protective gear. Always wear safety glasses, welder's helmet, and a respirator when operating this welder.

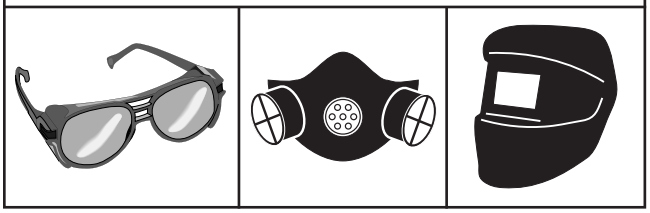

Note: *Steps in* ***Installing/Changing Wire*** *and* ***Adjusting Wire Feed Tension*** *on* ***Page 19*** *and* ***21*** *MUST be completed before Test Run.*

To test run machine:

1. Clear all setup tools away from machine.
2. Ensure ON/OFF switch is in OFF position.
3. Make sure ground clamp is not connected to any conductive material.
4. Connect machine to power supply and turn machine ***ON***.
5. Point gun away from yourself, bystanders, or any conductive material. Squeeze trigger briefly to feed wire through gun.
6. Verify motor operation by slowly turning wire feed speed dial. Squeeze trigger briefly to verify that dial adjusts wire feed speed.
7. Cut excess wire off so stickout is approximately ¼".
8. Turn machine ***OFF*** and disconnect from power.

SECTION 4: OPERATIONS

Operation Overview

The purpose of this overview is to provide the novice machine operator with a basic understanding of how the machine is used during operation, so the machine controls/components discussed later in this manual are easier to understand.

Due to the generic nature of this overview, it is **not** intended to be an instructional guide. To learn more about specific operations, read this entire manual, seek additional training from experienced machine operators, and do additional research outside of this manual by reading "how-to" books, trade magazines, or websites.

NOTICE

If you are not experienced with this type of machine, WE STRONGLY RECOMMEND that you seek additional training outside of this manual. Read books/magazines or get formal training before beginning any projects. Regardless of the content in this section, Grizzly Industrial will not be held liable for accidents caused by lack of training.

⚠WARNING

Always treat the welding components as if they carry live welding current, even when the welder reaches the duty cycle limit and shuts down. When the welder re-establishes the welding current, the electrode and work lead will immediately carry live welding current. Ignoring this warning could result in serious personal injury or death.

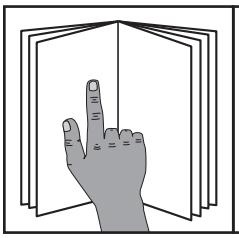

⚠WARNING

To reduce your risk of serious injury, read this entire manual BEFORE using machine.

To complete a typical operation, the operator does the following:

1. Examines workpiece to make sure it is properly prepared, suitable and safe for welding (see **Workpiece Inspection** on **Page 23**).
2. Inspects welder for any damage or exposed wire, and ensures proper setup.
3. Wears ANSI-approved welding safety gear, including welding hood, respirator, gloves, boots, and long sleeves.
4. Connects machine to power and turns machine ***ON***.
5. Properly connects ground clamp as close as possible to workpiece, or to metal workbench where workpiece is mounted and electrically connected.
6. Adjusts machine to desired settings.
7. Welds workpiece.
8. Disconnects ground clamp from workpiece, and places ground clamp and welding gun away from conductive materials.
9. Allows welder fan to cool machine.
10. Turns machine ***OFF*** and disconnects machine from power.

Installing/Changing Wire

Generally speaking, the size of wire should be changed depending on what thickness of metal is being welded on. Use 0.030" wire for thinner metals and 0.035" for thicker metals. Wire thickness primarily affects the depositional rate of the consumable metal/amperage, so machine settings may also need to be adjusted if the wire size has been changed.

To install/change wire:

1. DISCONNECT MACHINE FROM POWER!

2. Slide latch back to lift top cover and expose installed wire spool and wire feed driver (see **Assembly** on **Page 16**).

3. Move tension knob up. Then move tension arm away from wire feed roller (see **Figure 12**).

4. Remove end of wire from spool while pinching roll to prevent unraveling. Cut bent end of spool. Slide wire through wire guide along wire drive roller and into wire housing (see **Figure 12**).

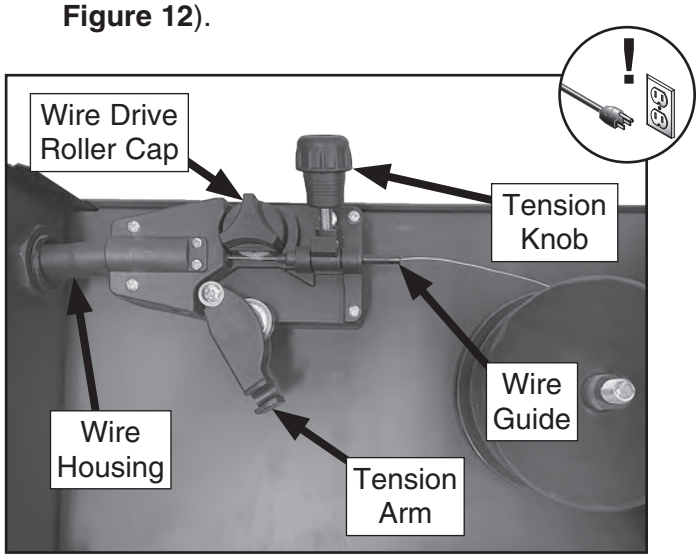

Figure 12. Wire installed in wire feed driver.

5. Remove wire drive roller by twisting cap counterclockwise. Lift up to remove cap with wire drive roller.

6. Compare gauge of wire to slots in wire drive roller to determine which slot fits best. Large wire groove fits 0.035" flux-cored wire, and small groove fits 0.030" flux-cored wire (see **Figure 13**).

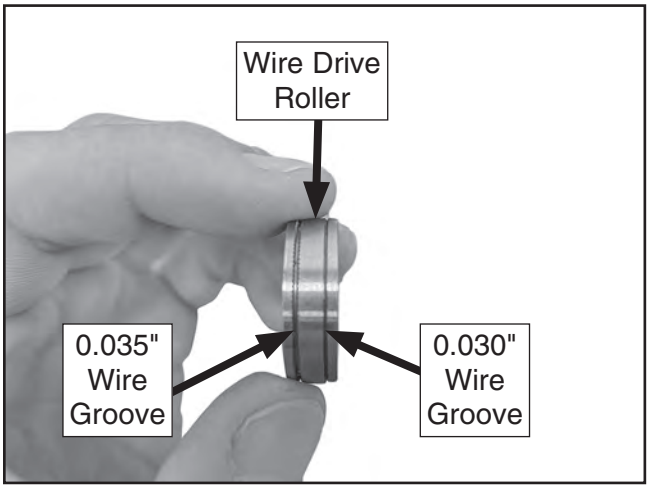

Figure 13. Wire drive roller.

7. Install wire drive roller so desired slot is on top, and reattach it to machine with wire drive roller cap.

8. Move tension arm against wire, then flip tension knob down to secure tension arm in place (see **Figure 14**).

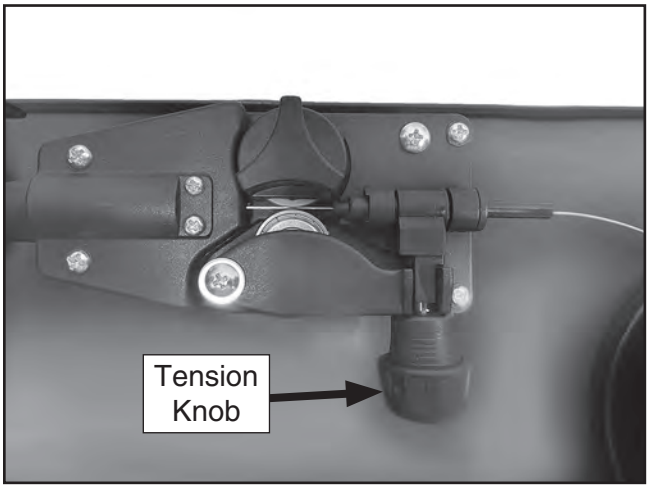

Figure 14. Wire feed driver with wire installed.

9. Remove gun nozzle, and unscrew contact tip (see **Figure 15**).

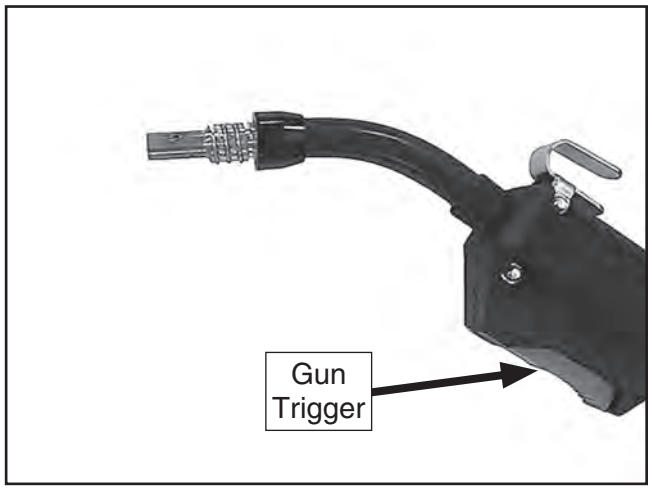

Figure 15. Nozzle and contact tip removed from welding gun.

10. Plug machine into power source. Ensure ground clamp is not touching conductive material. Turn machine ***ON***.

11. Pointing gun away from yourself and any conductive material, squeeze trigger to begin feeding wire through machine. Once wire appears at gun tip, release trigger (see **Figure 16**).

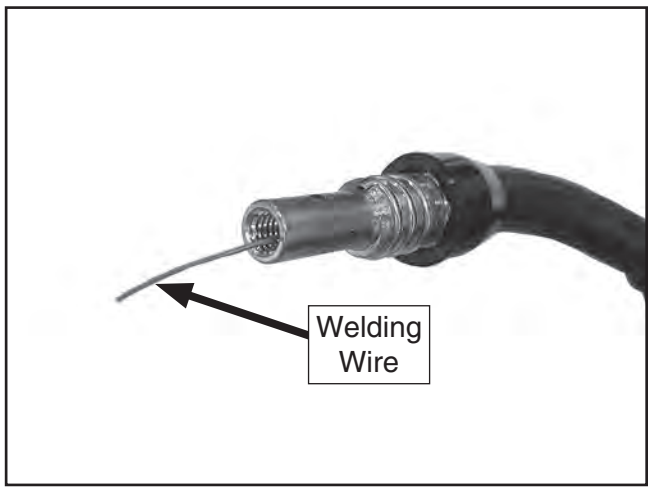

Figure 16. Wire extending from gun.

12. Turn machine ***OFF*** and disconnect from power source.

13. Slide contact tip for appropriate wire gauge over wire and screw in place. Snug with needle nose pliers. DO NOT overtighten.

14. Slide gun nozzle back in place (see **Figure 17**).

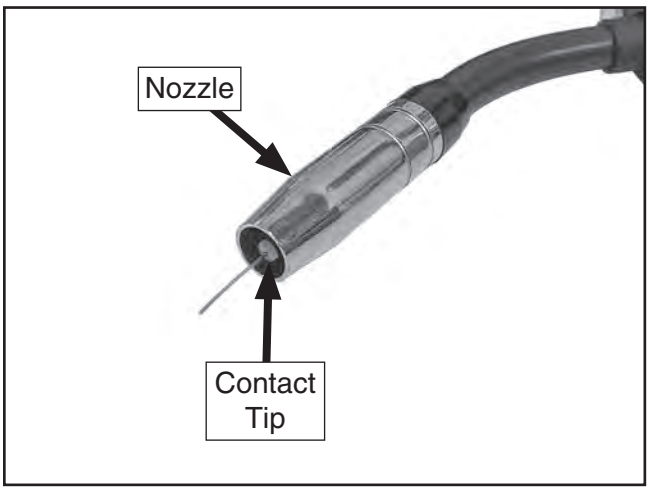

Figure 17. Welding gun components assembled.

Adjusting Wire Feed Tension

Wire feed tension must be set properly to ensure that the welding wire feeds correctly during welding operations.

To adjust wire feed tension:

1. DISCONNECT MACHINE FROM POWER!

2. Slide latch back to lift top cover and expose installed wire spool and wire feed driver (see **Assembly** on **Page 16**).

3. Use wire tension knob to adjust wire tension. Turn knob clockwise to increase tension, and counterclockwise to decrease tension.

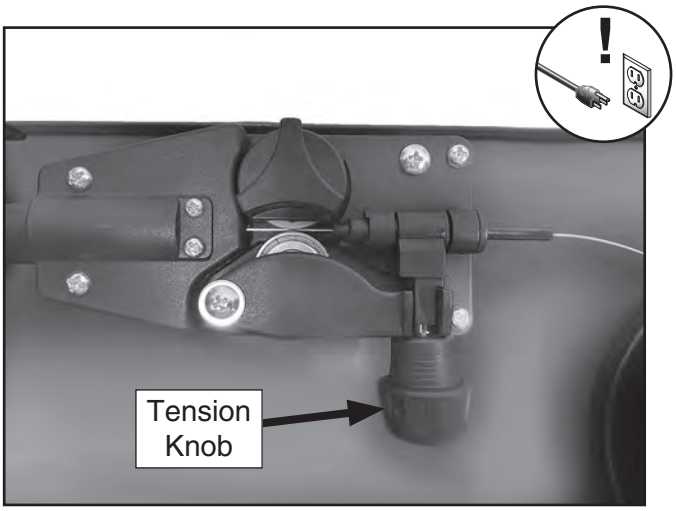

Figure 18. Wire feed driver assembly locked.

4. Hand-tighten wire spool nut to apply tension to wire spool (see **Figure 19**). Spool should spin freely when wire is being fed through machine, but immediately stop after letting go of trigger to prevent unraveling.

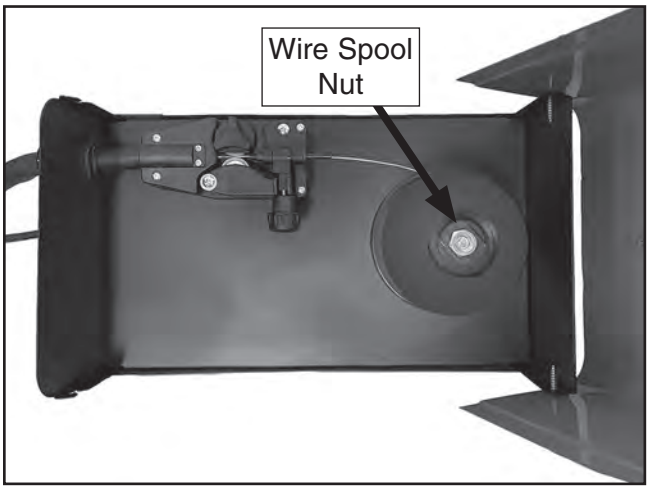

Figure 19. Wire spool tension nut.

Note: *Wire tension should be tight enough to prevent wire from slipping in driver wheel, but not so tight that it cannot feed through assembly smoothly. If wire tension is too low, it can cause wire spool to unravel.*

5. Once desired wire tension is achieved, close top cover of machine.

Operation Guidelines

NOTICE

The following instructions are not intended to be a complete list of welding steps. To become a good welder, read books on welding, get help from experienced welders, and practice.

Although it is beyond the scope of this manual to instruct how to weld, here are some general guidelines for successful welding:

- Read and understand this manual and ensure that all safety instructions are followed.
- Establish a safe and efficient welding environment, and ensure that you are properly protected for the welding operation. Ensure that there is a working fire extinguisher readily available.
- Have an experienced welder stand by to assist if needed.
- Decide which type of weld is correct for your project and properly prepare metal.
- Choose correct amperage output and be aware of duty cycle for this amperage.
- Select correct electrode type and size for your welding project.
- Make sure welding cables and grounds are secure.
- Stay aware of work environment around you as you weld and ensure that flying sparks do not start a fire.
- Look slightly ahead of the arc. Even with protection of welder's hood, looking directly at arc can damage your eyes.
- Listen to sound of the weld. Each type of weld has its own distinct sound when it is progressing correctly.

Welder Duty Cycle

As the welder produces the desired power output for the welding operation, power is converted to heat. In order to protect the welder components from over-heating, each welder has an established duty cycle, which varies depending on the amperage output being used.

A duty cycle is the number of minutes out of 10 minutes that the welder can safely operate at the current amperage output without over-heating. For instance, the Model G0879 has a duty cycle of 20% at 60A output. This means that the welder can operate continuously for 2 minutes at 60A output, then the arc must be stopped to allow the welder, using the cooling fan, to cool off for at least 8 minutes before starting the arc again.

The Model G0879 has a cooling fan and an internal thermostat that will shut the welder down if the duty cycle is exceeded. This will be evident by the loss of welding circuit and the orange warning light on the face of the welder will illuminate. When the welder has cooled sufficiently, the internal thermostat will re-establish the welding circuit and the orange warning light will go out.

NOTICE

Always keep the power *ON* to the welder after completing the welding operation to let the welder fan cool the welder down. To avoid damage to your welder, never shut the power *OFF* before the welder enclosure is completely cool to the touch.

Workpiece Inspection

Some workpieces are not safe to weld or may require modification before they are safe to weld. **Before welding, inspect all workpieces for the following:**

- ***Material Type:*** This machine is intended for mild steel welding using flux cored wire. Be aware of the side affects of welding different kinds of metals. Take proper precautions and think about the workpiece you are welding on. Know what type of material you are working with; welding certain treated metals, such as galvanized steel, can create severely toxic fumes.

- ***Foreign Objects:*** Paint, grease, chemicals, rust, and other unwanted substances can affect the quality and safety of welds. Ensure work area is free of flammable materials Make sure the workpiece is clean before welding, for both the location of the weld and the ground clamp.

- ***Sealed containers:*** DO NOT weld, burn or heat sealed or pressurized containers. Observe specific guidelines when welding a workpiece to ensure safe practice has not been overlooked.

Basic Operation

NOTICE

It is beyond the scope of this manual to instruct how to properly weld. No manual is a replacement for formal training or instruction. It is highly recommended that the user seek formal training with extensive practice.

Becoming familiar with welding techniques and settings requires practice and experience. Take time to practice and understand the basic variables of welding techniques and settings.

To perform a basic weld:

1. Follow all safety guidelines to ensure environment and workpiece are safe for welding practice (see **Workpiece Inspection**, and **Safety** on **Page 8**).

2. Wear all recommended and approved welding safety gear, including welding hood, gloves, long sleeves, and boots (see **Additional Safety for Welders** on **Page 10**).

3. Connect ground clamp to workpiece, near intended location of weld.

4. Plug in welder and turn machine ***ON***.

5. Point gun away from yourself and any conductive material. Squeeze trigger to release welding wire. Cut back wire to about ¼" stick-out from contact tip (see **Figure 20**).

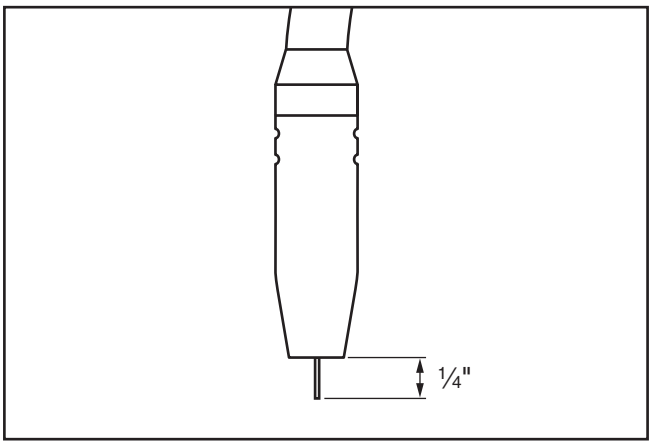

Figure 20. Welding wire stick-out.

6. Set desired settings for type of intended weld (see **Figure 21**).

Rated Input	Voltage	Phase	Frequency	Current
	110V	1	60Hz	20A
Output	**Current**	**Duty Cycle**	**Voltage**	**MAX.Output Voltage**
Rated Output	60A	20%	13.4V	27VAC
Max. Output	70A	10%	11.9V	

Figure 21. Welding specification chart.

7. Position welding gun so it is aimed perpendicular to intended weld location.

   Note: *Wire electrode has a live electrical current when machine is turned **ON** and will arc immediately when wire makes contact with grounded workpiece. Trigger will only begin to feed wire out of gun.*

8. Tilt gun 15–20° along direction of weld to allow better visibility of weld location (see **Figure 22**).

   Note: *Flux core welds can be made by "dragging," "pushing," or staying perpendicular to weld. However, it is generally recommended that the operator utilize the "dragging" technique to avoid slag inclusions in welds.*

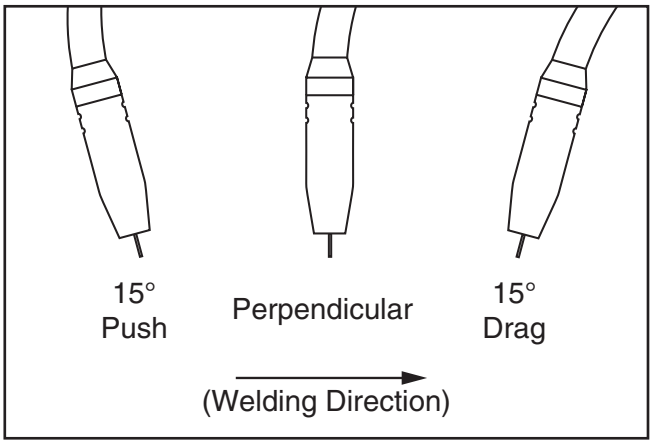

Figure 22. Welding angle.

9. Squeeze trigger so wire begins to feed into weld. Once wire makes contact with workpiece, arc will start and weld pool will begin to form. Maintain consistent distance between contact tip and workpiece of 3⁄16"—1⁄4" (see **Figure 23**).

   Note: *Keep welding gun cable as straight as possible so as to not inhibit wire feed.*

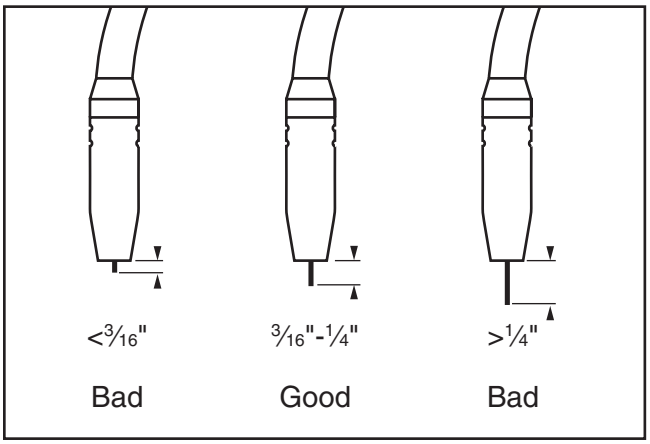

Figure 23. Contact tip to work distance.

10. Watch molten weld pool form. Controlling weld pool with welding gun will dictate how weld bead forms. Size of weld pool dictates how fast to move welding gun.

    — If weld burns through workpiece, either move gun faster or set machine to “LOW” amperage setting.

    — If base metal is not being penetrated by weld, either slow down gun travel speed or set machine to “HIGH” amperage setting.

11. When weld is complete, release trigger on welding gun to stop weld.

12. Allow machine to cool, then turn machine ***OFF***.

Welding Tips

The following list includes good practices for welding. The list is by no means exhaustive, but contains some basic tips to aid the user in developing better welding skills by focusing on contact tip to work distance, gun angle, travel speed, wire speed, amperage output, and slag coverage.

For Flux Core Arc Welding (FCAW):

- ***Contact Tip to Work Distance:*** Too short of contact tip to work distance can cause burn-back and poor slag coverage. Too long of distance will cause stubbing and inconsistent welds.

- ***Gun Angle:*** Too aggressive of a gun angle will cause wire to blowout the weld puddle, making it globby and inconsistent. Sometimes, too minimal of weld angle can cause slag inclusions in welds, causing weak points.

- ***Gun Travel Speed:*** Too slow of gun travel speed can cause built-up and convex welds with bad slag coverage. Too fast of gun travel speed can cause narrow, globby welds with minimal penetration.

- ***Wire Speed:*** Wire speed is strongly related to amperage, but it has more to do with weld heat. Too high of wire speed can cause stubbing and poor slag coverage. Too low of wire speed can cause globby welds with lots of spatter.

- ***Amperage Output:*** Amperage is strongly related to wire speed, but it has more to do with weld penetration. Too high of amperage output tends to yield deeper weld penetration and burn-through, whereas too low of amperage can cause bad bonding between weld and workpiece with lots of spatter.

- ***Slag Coverage:*** As flux melts during the welding process, it is redeposited as slag on top of the weld bead. Ideally, FCAW welds will have consistent and even slag coverage to properly protect the weld from contamination while cooling. Never weld on top of slag; always remove before making another weld.

SECTION 5: ACCESSORIES

⚠WARNING

Installing unapproved accessories may cause machine to malfunction, resulting in serious personal injury or machine damage. To reduce this risk, only install accessories recommended for this machine by Grizzly.

NOTICE

Refer to our website or latest catalog for additional recommended accessories.

H7439—Kinco - 20" Welding Bib
This welding bib measures 22" wide by 20" long and features an adjustable waist strap.

Figure 24. H7439 Welding Bib.

T30316—Metal Man - Black Variable Shade Auto-Darkening Welding Helmet
Designed to protect the eye and face from sparks, spatter, and harmful radiation under normal welding conditions.

Figure 25. T30316 Auto-Darkening Welding Helmet.

H7436—Kinco Cape Sleeves
Double-stitched with Kevlar heat-resistant thread for durability; adjustable wrists and waist fit.

Figure 26. H7436 Kinco Cape Sleeves.

T31558—Kinco Premium Cowhide Welding Gloves
Made with premium grade split cowhide leather, and sewn with cut/heat resistant thread.

Figure 27. T31558 Welding Gloves.

T28932—36" x 24" Welding Table
Creating the perfect weld requires a rock-solid work surface, and this welding table offers the rigidity you need.

Simply install your clamp system or custom jig in the conveniently spaced 16mm holes, and you're ready to weld! The all-steel construction and table top overhang make connecting a grounding clamp fast and easy. Made of 9-gauge steel.

Figure 28. T28932 Welding Table.

T32085—Welding Respirator Kit (Medium)
The T32085 Welding Respirator Kit is a size medium respirator providing protection for certain particulates found in welding at concentrations up to 10 times the Permissible Exposure Level (PEL).

NIOSH approved for P100. The P100 pancake filters provide at least 99.97% filtration efficiency against solid and liquid aerosols, including oil-based aerosols.

A layer of activated carbon provides relief from the irritating effects of nuisance levels of ozone, organic vapors and acid gases.

Figure 29. T32085 Welding Respirator Kit.

T31756—Arrow Welding Magnet, 75 lb.
Use for welding, soldering, and assembly. Multi-angle design can be used at 45°, 90°, or 135°. Capacity: 75 lbs.

Figure 30. T31756 Arrow Welding Magnet.

T31740 and T31741—U.S. Forge E71T-GS Flux Cored Wire - 2 lb.
Use Flux Cored Wire to create strong, clean welds, with a smooth surface for efficient wire feed. Features minimal spatter and easy slag cleanup. Comes in 0.030" and 0.035" diameter.

Figure 31. T31740 .030" Flux-Cored Wire.

T31173—9" Locking Welding Clamp
Milwaukee® Torque Lock™ locking tools provide faster setup and more locking force for the professional tradesmen. The patent pending thumb screw provides the user with a more convenient geometry for hand force, while providing clearance to generate more torque with the unique screwdriver through-hole design.

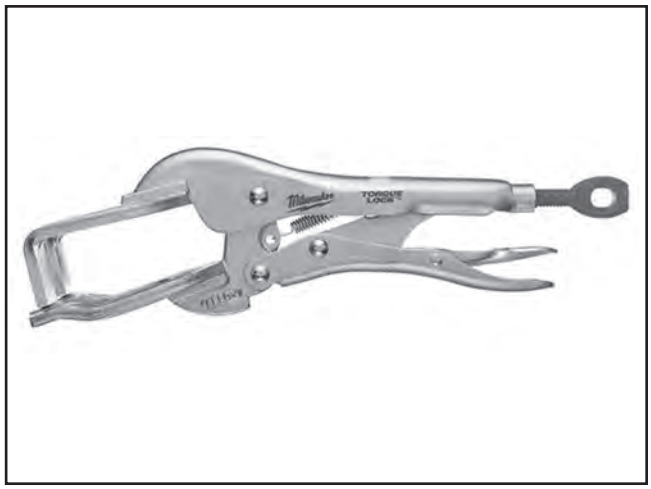

Figure 32. T31173 Locking Welding Clamp.

T30369 and T30370—Contact Tips
Contact Tip for use with the G0879 Flux Core Mig Welder. Sizes .030" and .035".

Figure 34. T30369 0.030" contact tip for G0879.

T30368—MIG Gas Diffuser
MIG Gas Diffuser for holding contact tip on G0879 Flux Core MIG Welder.

Figure 33. T30368 Diffuser for G0879.

T30371—MIG Nozzle
MIG Nozzle for use with the G0879 Welder.

Figure 35. T30371 Nozzle for G0879.

T30367—Torch Neck for G0879
Torch Neck for use with the G0879 Welder.

Figure 36. T30367 Torch Neck for G0879.

SECTION 6: MAINTENANCE

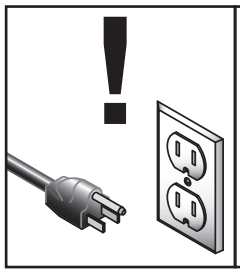

⚠WARNING

To reduce risk of shock or accidental startup, always disconnect machine from power before adjustments, maintenance, or service.

Schedule

For optimum performance from this machine, this maintenance schedule must be strictly followed.

Ongoing
To minimize your risk of injury and maintain proper machine operation, shut down the machine immediately if you ever observe any of the items below, and fix the problem before continuing operations:

- Damaged components.
- Worn or damaged wires.
- Spatter buildup on welding gun tip.
- Any other unsafe condition.

Weekly Maintenance
- Dust and dirt build up in machine and cooling fan.

Replacing Fuse

If the machine stops functioning, it is possible that the machine may have blown a fuse.

To replace fuse on welder:

1. DISCONNECT MACHINE FROM POWER!

2. Raise top cover of machine, as shown in **Assembly** on **Page 16.**

3. Remove (8) Phillips head screws from left machine panel (see **Figure 37**).

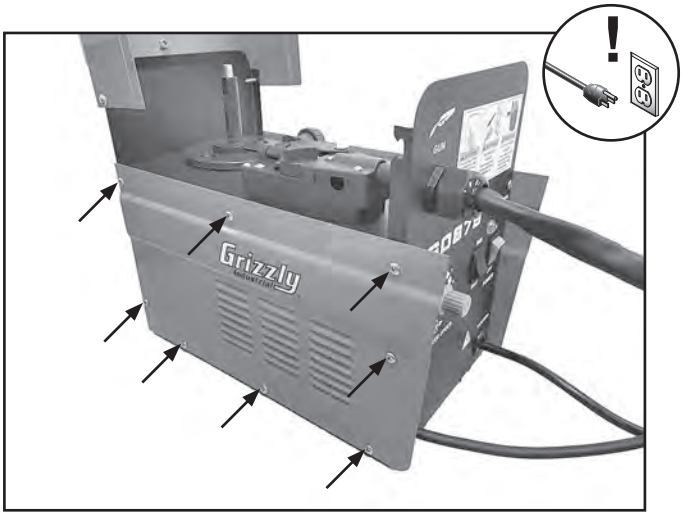

Figure 37. Removing left side panel.

4. Remove clear fuse cover on circuit board labeled "FUSE" (see **Figure 38**).

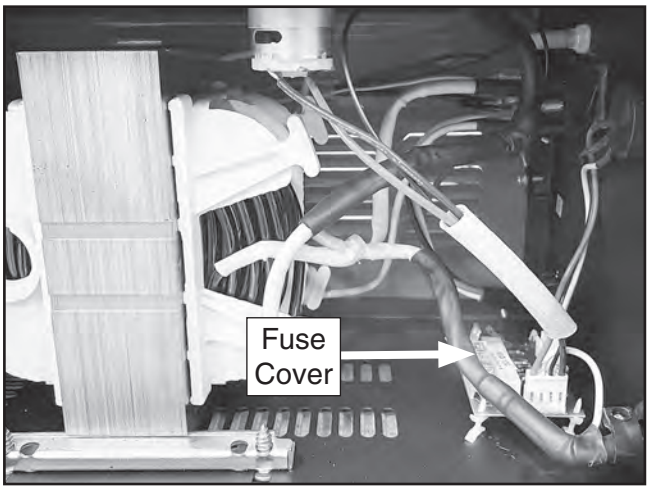

Figure 38. Location of clear fuse cover.

5. Remove and inspect machine fuse. If fuse is damaged or burnt, replace with new fuse. If fuse appears to be in good condition, replace and see **Troubleshooting** on **Page 31** for other possible problems.

6. Replace clear cap over fuse.

7. Re-install left side panel.

SECTION 7: SERVICE

Review the troubleshooting procedures in this section if a problem develops with your machine. If you need replacement parts or additional help with a procedure, call our Technical Support. **Note:** *Please gather the serial number and manufacture date of your machine before calling.*

Troubleshooting

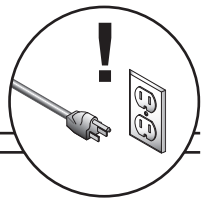

Motor & Electrical

Symptom	Possible Cause	Possible Solution
Machine does not start, or power supply breaker immediately trips after startup.	1. Thermal overload has tripped/duty cycle exceeded. 2. Incorrect power supply voltage or circuit size. 3. Power supply circuit breaker tripped or fuse blown. 4. Blown fuse. 5. Wiring broken, disconnected or corroded. 6. ON/OFF switch at fault.	1. Rest. Allow machine to cool with fan ON (**Page 22**). 2. Ensure correct power supply voltage and circuit size. 3. Ensure circuit is free of shorts. Reset circuit breaker or replace fuse (see **Page 30**). 4. Replace fuse/ensure no shorts. 5. Fix broken wires or disconnected/corroded connections. 6. Replace switch.
Wire does not feed properly or does not feed at all.	1. Machine has run out of wire. 2. Incorrect contact tip size. 3. Insufficient wire feed spring tension. 4. Wire guide sheath/contact tip in welding torch assembly is blocked. 5. Wire spool nut is too tight/too loose. 6. Wire spool has oxidized or poorly wound wire. 7. Wire burned back and welded to contact tip. 8. Duty cycle exceeded. 9. Drive roller groove does not match wire gauge.	1. Replace welding wire spool (**Page 16**). 2. Match contact tip to wire gauge. 3. Tighten tension knob (**Page 21**). 4. Clean wire sheath; replace contact tip; replace welding torch assembly. 5. Adjust nut so spool moves freely (**Page 16**). 6. Replace welding wire spool (**Page 16**). 7. Replace contact tip. DO NOT run trigger. This will unravel wire spool. 8. Leave machine plugged in; allow to cool until orange light goes out, then attempt to power up machine again. 9. Match drive roller groove to wire gauge (**Page 21**).
Reduced welding power.	1. Ground cable is not connected or is poorly connected. 2. One or more rectifiers failed. 3. If using extension cord, cord is too long.	1. Check ground cable for proper connection (**Page 13**). 2. A qualified welding technician should open unit and check for burnt rectifiers. 3. Use a shorter extension cord or none at all.
Inconsistent welding circuit.	1. Improperly cleaned workpiece/ wrong type of material. 2. Incorrect size of contact tip for wire. 3. Contact tip loose. 4. Contact tip damaged. 5. Feed rollers are worn. 6. Welding wire corroded. 7. Ground clamp not connected to workpiece/ too far from weld location/bad ground connection.	1. Clean workpiece/ use correct type of material. 2. Replace with correct contact tip (**Page 20**). 3. Tighten contact tip. 4. Replace with new contact tip. 5. Replace worn components. 6. Replace welding wire spool (**Page 16**). 7. Connect the ground clamp close to your workpiece. Make sure ground clamp is connected/terminals are clean.

Difficulty/ inability to properly start/ arc a weld.	1. Improperly cleaned workpiece/ wrong type of material. 2. Ground clamp not connected to workpiece/ too far from weld location/bad ground connection. 3. Machine settings incorrect for workpiece. 4. Residue build up at end of wire insulates electrode and makes starting arc difficult.	1. Clean workpiece/ use correct type of material. 2. Connect ground clamp close to workpiece. Make sure ground clamp is connected/terminals are clean (**Page 13**). 3. Adjust machine settings to be appropriate for workpiece (**Page 25**). 4. Break/cut tip of wire off before beginning weld.
Burning holes in workpiece.	1. Material too thin for welding operation. 2. Welding amperage output too high. 3. Wire speed too high. 4. Welding torch moved too slow. 5. Contact tip to workpiece distance to long.	1. Use thicker material. Not recommended to weld material thinner than 1/16" steel with G0879 (**Page 7**). 2. Lower amperage output. 3. Reduce wire speed. 4. Increase welding torch travel speed. 5. Maintain contact tip to workpiece distance of 3/16"-1/4" (**Page 24**).
Lack of weld penetration.	1. Improperly cleaned workpiece/ wrong type of material/ material too thick for welding operation. 2. Welding output amperage too low. 3. Wire speed too slow. 4. Welding torch moved too quick. 5. Contact tip to workpiece distance to short.	1. Clean workpiece/ use correct type of material/ maximum material thickness for G0879 is 3/16" steel (**Page 7**). 2. Increase amperage output. 3. Increase wire speed. 4. Decrease welding torch travel speed. 5. Maintain contact tip to workpiece distance of 3/16"-1/4" (**Page 24**).
Unable to maintain constant arc; excessive spatter.	1. Contact tip to workpiece distance too long. 2. Ground clamp not connected to workpiece/ too far from weld location/bad ground connection. 3. Welding output amperage too high. 4. Wire speed too high. 5. Welding torch moved too slow.	1. Maintain appropriate contact tip to workpiece distance throughout entire weld. 2. Connect ground clamp close to workpiece. Make sure ground clamp is connected/terminals are clean (**Page 13**). 3. Lower amperage output. 4. Reduce wire speed. 5. Increase welding torch travel speed.

WARRANTY & RETURNS

Grizzly Industrial, Inc. warrants every product it sells for a period of **1 year** to the original purchaser from the date of purchase. This warranty does not apply to defects due directly or indirectly to misuse, abuse, negligence, accidents, repairs or alterations or lack of maintenance. This is Grizzly's sole written warranty and any and all warranties that may be implied by law, including any merchantability or fitness, for any particular purpose, are hereby limited to the duration of this written warranty. We do not warrant or represent that the merchandise complies with the provisions of any law or acts unless the manufacturer so warrants. In no event shall Grizzly's liability under this warranty exceed the purchase price paid for the product and any legal actions brought against Grizzly shall be tried in the State of Washington, County of Whatcom.

We shall in no event be liable for death, injuries to persons or property or for incidental, contingent, special, or consequential damages arising from the use of our products.

The manufacturers reserve the right to change specifications at any time because they constantly strive to achieve better quality equipment. We make every effort to ensure that our products meet high quality and durability standards and we hope you never need to use this warranty.

In the event you need to use this warranty, contact us by mail or phone and give us all the details. We will then issue you a "Return Number," which must be clearly posted on the outside as well as the inside of the carton. We will not accept any item back without this number. Proof of purchase must accompany the merchandise.

Please feel free to write or call us if you have any questions about the machine or the manual.

Thank you again for your business and continued support. We hope to serve you again soon.

To take advantage of this warranty, you must register it at **https://www.grizzly.com/forms/warranty**, or you can scan the QR code below to be automatically directed to our warranty registration page. Enter all applicable information for the product.

WARRANTY

grizzly.com