MODEL G0944/G0944HEP
1-1/2 HP WALL MOUNT DUST COLLECTORS

OWNER'S MANUAL

(For models manufactured since 03/21)

#AI21876 PRINTED IN TAIWAN V1.02.23

******Keep for Future Reference******

⚠ WARNING!

This manual provides critical safety instructions on the proper setup, operation, maintenance, and service of this machine/tool. Save this document, refer to it often, and use it to instruct other operators.

Failure to read, understand and follow the instructions in this manual may result in fire or serious personal injury—including amputation, electrocution, or death.

The owner of this machine/tool is solely responsible for its safe use. This responsibility includes but is not limited to proper installation in a safe environment, personnel training and usage authorization, proper inspection and maintenance, manual availability and comprehension, application of safety devices, cutting/sanding/grinding tool integrity, and the usage of personal protective equipment.

The manufacturer will not be held liable for injury or property damage from negligence, improper training, machine modifications or misuse.

⚠ WARNING!

Some dust created by power sanding, sawing, grinding, drilling, and other construction activities contains chemicals known to the State of California to cause cancer, birth defects or other reproductive harm. Some examples of these chemicals are:

- **Lead from lead-based paints.**
- **Crystalline silica from bricks, cement and other masonry products.**
- **Arsenic and chromium from chemically-treated lumber.**

Your risk from these exposures varies, depending on how often you do this type of work. To reduce your exposure to these chemicals: Work in a well ventilated area, and work with approved safety equipment, such as those dust masks that are specially designed to filter out microscopic particles.

Table of Contents

INTRODUCTION

Contact Info

We stand behind our machines! If you have questions or need help, contact us with the information below. Before contacting, make sure you get the **serial number** and **manufacture date** from the machine ID label. This will help us help you faster.

Grizzly Technical Support
1815 W. Battlefield
Springfield, MO 65807
Phone: (570) 546-9663
Email: techsupport@grizzly.com

We want your feedback on this manual. What did you like about it? Where could it be improved? Please take a few minutes to give us feedback.

Grizzly Documentation Manager
P.O. Box 2069
Bellingham, WA 98227-2069
Email: manuals@grizzly.com

Machine Differences

Models G0944 and G0944HEP are identical machines, with one exception.

Model G0944HEP is equipped with a MERV-17 HEPA filter. The G0944 is not.

Manual Accuracy

We are proud to provide a high-quality owner's manual with your new machine!

We made every effort to be exact with the instructions, specifications, drawings, and photographs in this manual. Sometimes we make mistakes, but our policy of continuous improvement also means that **sometimes the machine you receive is slightly different than shown in the manual**.

If you find this to be the case, and the difference between the manual and machine leaves you confused or unsure about something, check our website for an updated version. We post current manuals and manual updates for free on our website at **www.grizzly.com**.

Alternatively, you can call our Technical Support for help. Before calling, make sure you write down the **manufacture date** and **serial number** from the machine ID label (see below). This information is required for us to provide proper tech support, and it helps us determine if updated documentation is available for your machine.

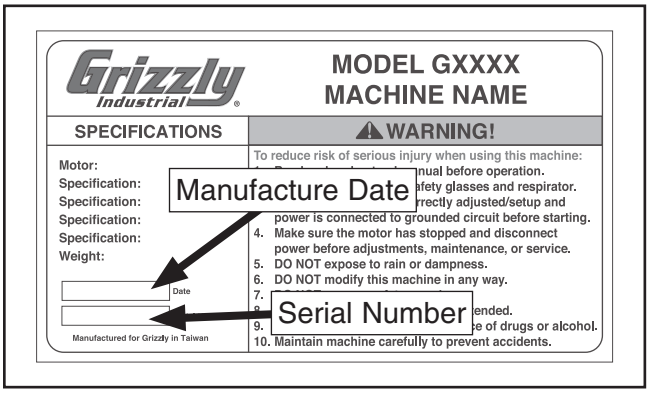

Identification

Become familiar with the names and locations of the controls and features shown below to better understand the instructions in this manual.

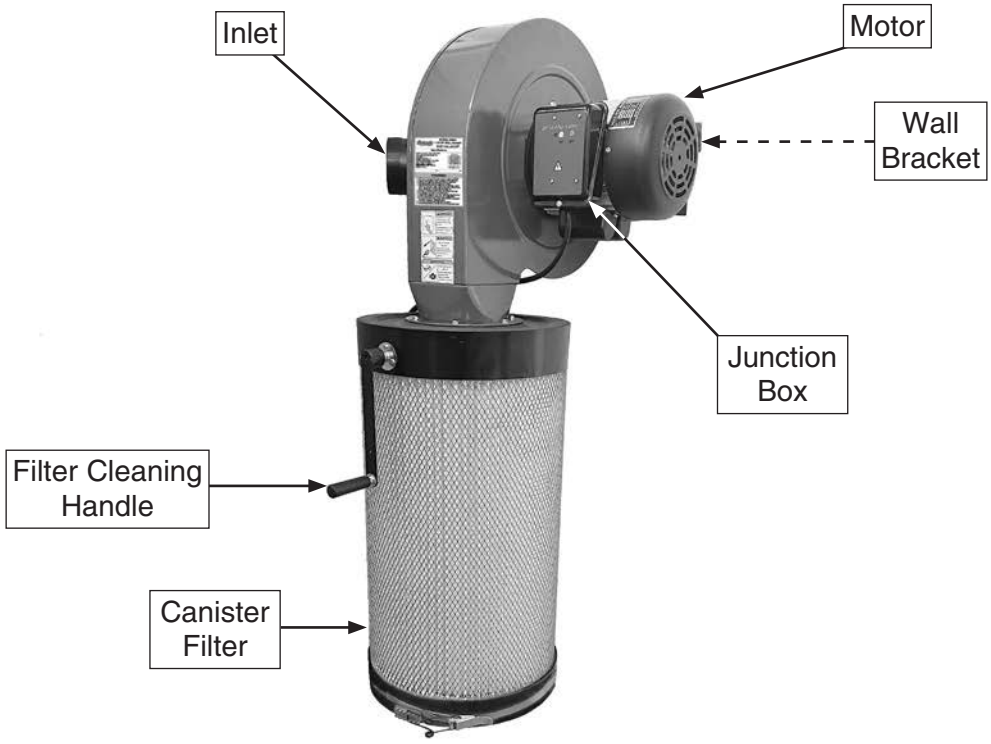

(G0944 Shown)

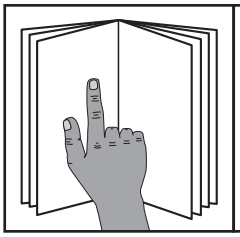

WARNING

To reduce your risk of serious injury, read this entire manual BEFORE using machine.

Controls & Components

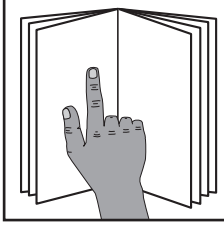

⚠WARNING

To reduce your risk of serious injury, read this entire manual BEFORE using machine.

Refer to the following figures and descriptions to become familiar with the basic controls and components of this machine. Understanding these items and how they work will help you understand the rest of the manual and minimize your risk of injury when operating this machine.

A. Inlet Adapter: Allows connection of two 4" ducts to main inlet port.

B. Filter Cleaning Handle: Turn handle to knock dust cake off filter pleats, clean filter, and maintain air flow. Clean filter after each use and when performance drops.

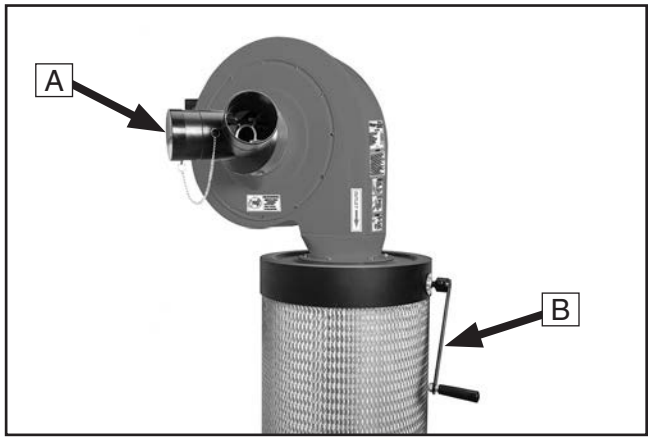

Figure 1. Inlet adapter and filter cleaning handle.

⚠WARNING

Like all machinery there is potential danger when operating this machine. Accidents are frequently caused by lack of familiarity or failure to pay attention. Use this machine with respect and caution to decrease the risk of operator injury. If normal safety precautions are overlooked or ignored, serious personal injury may occur.

C. ON Button: Turns machine ***ON***.

D. OFF Button: Turns machine ***OFF***.

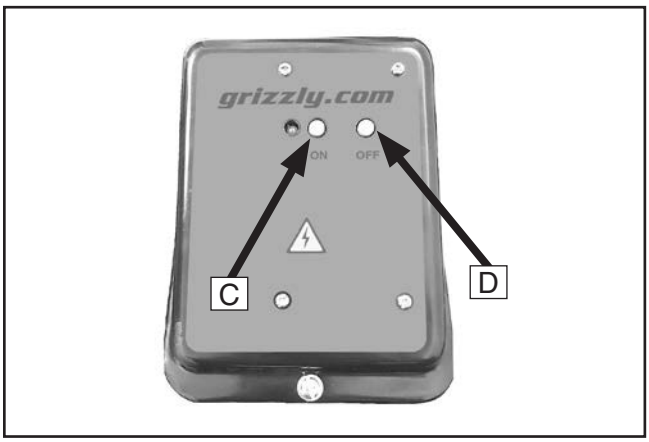

Figure 2. Junction box.

E. Remote Control: Green button turns machine ***ON***. Red button turns machine ***OFF***. Requires a 12V, type A27 battery.

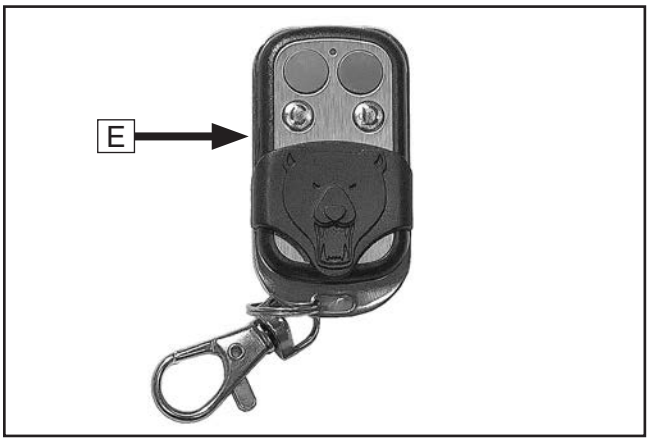

Figure 3. Remote control.

Note: *The remote control operates on radio frequency and has a range up to 75'. It does not need to be aimed at the junction box to operate.*

⚠CAUTION

No list of safety guidelines can be complete. Every shop environment is different. Always consider safety first, as it applies to your individual working conditions. Use this and other machinery with caution and respect. Failure to do so could result in serious personal injury, damage to equipment, or poor work results.

MACHINE DATA SHEET

Customer Service #: (570) 546-9663 · To Order Call: (800) 523-4777 · Fax #: (800) 438-5901

MODEL G0944 1-1/2 HP WALL-MOUNT DUST COLLECTOR WITH CANISTER FILTER

Product Dimensions:

Weight..... 71 lbs.
Width (side-to-side) x Depth (front-to-back) x Height..... 22-1/2 x 23-1/2 x 77-1/2 in.
Footprint (Length x Width)..... 6-1/2 x 7 in.

Shipping Dimensions:

Carton #1

Type..... Cardboard Box
Content..... Machine
Weight..... 58 lbs.
Length x Width x Height..... 24 x 23 x 22 in.

Carton #2

Type..... Cardboard Box
Content..... Canister Filter
Weight..... 19 lbs.
Length x Width x Height..... 18 x 18 x 31 in.

Electrical:

Power Requirement..... 110V, Single-Phase, 60 Hz
Full-Load Current Rating..... 15A
Minimum Circuit Size..... 20A
Connection Type..... Cord & Plug
Power Cord Included..... Yes
Power Cord Length..... 72 in.
Power Cord Gauge..... 14 AWG
Plug Included..... Yes
Included Plug Type..... 5-15
Switch Type..... Circuit Board with ON/OFF Buttons and Remote Receiver

Motors:

Main

Horsepower..... 1.5 HP
Phase..... Single-Phase
Amps..... 15A
Speed..... 3450 RPM
Type..... TEFC Capacitor-Start Induction
Power Transfer ..... Direct
Bearings..... Sealed & Permanently Lubricated
Centrifugal Switch/Contacts Type..... External

Main Specifications:

Operation

Dust Collector Type	Single-Stage
Approved Dust Types	Wood
Filter Type	Pleated Canister
Airflow Performance	1250 CFM
Max Static Pressure (at 0 CFM)	10.4 in.
Main Inlet Size	6 in.
Inlet Adapter Included	Yes
Number of Adapter Inlets	2
Adapter Inlet Size	4 in.
Machine Collection Capacity At One Time	2
Maximum Material Collection Capacity	15 Gallons

Filter Information

Filtration Rating	1 Micron
Filter Surface Area	38.75 Sq. Ft.

Bag Information

Number of Lower Bags	1
Lower Bag Diameter	14-1/2 in.
Lower Bag Length	24 in.

Canister Information

Number of Canister Filters	1
Canister Filter Diameter	14-1/2 in.
Canister Filter Length	28 in.

Impeller Information

Impeller Type	Radial Fin
Impeller Size	12-3/4 in.
Impeller Blade Thickness	1/4 in.

Construction

Lower Bag	Clear Plastic
Canister	Spun Bond Polyester
Impeller	Aluminum
Paint Type/Finish	Powder Coat
Blower Housing	Steel
Body	Steel

Other Specifications:

Country of Origin	Taiwan
Warranty	1 Year
Approximate Assembly & Setup Time	30 Minutes
Serial Number Location	ID Label
Sound Rating	75 - 77 dB

Features:

Spun Bond Polyester Canister with 1-Micron Filtration
12-3/4" Cast-Aluminum Impeller
Steel Base Plate Mounts Easily to Most Walls
Built-In Canister Cleaner Maintains Canister Life and Performance

MACHINE DATA SHEET

Customer Service #: (570) 546-9663 · To Order Call: (800) 523-4777 · Fax #: (800) 438-5901

MODEL G0944HEP 1-1/2 HP WALL MOUNT DUST COLLECTOR WITH HEPA FILTER

Product Dimensions:

Weight..... 71 lbs.
Width (side-to-side) x Depth (front-to-back) x Height..... 22-1/2 x 23-1/2 x 77-1/2 in.
Footprint (Length x Width)..... 6-1/2 x 7 in.

Shipping Dimensions:

Carton #1

Type..... Cardboard Box
Content..... Machine
Weight..... 58 lbs.
Length x Width x Height..... 24 x 23 x 22 in.

Carton #2

Type..... Cardboard Box
Content..... Canister Filter
Weight..... 19 lbs.
Length x Width x Height..... 18 x 18 x 31 in.

Electrical:

Power Requirement..... 110V, Single-Phase, 60 Hz
Full-Load Current Rating..... 15A
Minimum Circuit Size..... 20A
Connection Type..... Cord & Plug
Power Cord Included..... Yes
Power Cord Length..... 72 in.
Power Cord Gauge..... 14 AWG
Plug Included..... Yes
Included Plug Type..... 5-15
Switch Type..... Circuit Board with ON/OFF Buttons and Remote Receiver

Motors:

Main

Horsepower..... 1.5 HP
Phase..... Single-Phase
Amps..... 15A
Speed..... 3450 RPM
Type..... TEFC Capacitor-Start Induction
Power Transfer ..... Direct
Bearings..... Sealed & Permanently Lubricated
Centrifugal Switch/Contacts Type..... External

Main Specifications:

Operation

Dust Collector Type	Single-Stage
Approved Dust Types	Wood
Filter Type	HEPA Canister
Airflow Performance	1280 CFM
Max Static Pressure (at 0 CFM)	10.4 in.
Main Inlet Size	6 in.
Inlet Adapter Included	Yes
Number of Adapter Inlets	2
Adapter Inlet Size	4 in.
Machine Collection Capacity At One Time	2
Maximum Material Collection Capacity	15 Gallons

Filter Information

Filtration Rating	99.97% of 0.3 Micron
Filter Surface Area	38.75 Sq. Ft.

Bag Information

Number of Lower Bags	1
Lower Bag Diameter	14-1/2 in.
Lower Bag Length	24 in.

Canister Information

Number of Canister Filters	1
Canister Filter Diameter	14-1/2 in.
Canister Filter Length	28 in.

Impeller Information

Impeller Type	Radial Fin
Impeller Size	12-3/4 in.
Impeller Blade Thickness	1/4 in.

Construction

Lower Bag	Clear Plastic
Canister	Spun-Bond Polyester
Impeller	Aluminum
Paint Type/Finish	Powder Coat
Blower Housing	Steel
Body	Steel

Other Specifications:

Country of Origin	Taiwan
Warranty	1 Year
Approximate Assembly & Setup Time	30 Minutes
Serial Number Location	ID Label
Sound Rating	75 - 77 dB

Features:

HEPA Canister Filter with Collection Capacity of 99.97% of 0.3-Micron Particles
12-3/4" Cast-Aluminum Impeller
Steel Base Plate Mounts Easily to Most Walls
Built-In Canister Cleaner Maintains Canister Life and Performance

SECTION 1: SAFETY

For Your Own Safety, Read Instruction Manual Before Operating This Machine

The purpose of safety symbols is to attract your attention to possible hazardous conditions. This manual uses a series of symbols and signal words intended to convey the level of importance of the safety messages. The progression of symbols is described below. Remember that safety messages by themselves do not eliminate danger and are not a substitute for proper accident prevention measures. Always use common sense and good judgment.

DANGER	**Indicates an imminently hazardous situation which, if not avoided, WILL result in death or serious injury.**
WARNING	**Indicates a potentially hazardous situation which, if not avoided, COULD result in death or serious injury.**
CAUTION	**Indicates a potentially hazardous situation which, if not avoided, MAY result in minor or moderate injury. It may also be used to alert against unsafe practices.**
NOTICE	**Alerts the user to useful information about proper operation of the machine to avoid machine damage.**

Safety Instructions for Machinery

WARNING

OWNER'S MANUAL. Read and understand this owner's manual BEFORE using machine.

TRAINED OPERATORS ONLY. Untrained operators have a higher risk of being hurt or killed. Only allow trained/supervised people to use this machine. When machine is not being used, disconnect power, remove switch keys, or lock-out machine to prevent unauthorized use—especially around children. Make your workshop kid proof!

DANGEROUS ENVIRONMENTS. Do not use machinery in areas that are wet, cluttered, or have poor lighting. Operating machinery in these areas greatly increases the risk of accidents and injury.

MENTAL ALERTNESS REQUIRED. Full mental alertness is required for safe operation of machinery. Never operate under the influence of drugs or alcohol, when tired, or when distracted.

ELECTRICAL EQUIPMENT INJURY RISKS. You can be shocked, burned, or killed by touching live electrical components or improperly grounded machinery. To reduce this risk, only allow qualified service personnel to do electrical installation or repair work, and always disconnect power before accessing or exposing electrical equipment.

DISCONNECT POWER FIRST. Always disconnect machine from power supply BEFORE making adjustments, changing tooling, or servicing machine. This prevents an injury risk from unintended startup or contact with live electrical components.

EYE PROTECTION. Always wear ANSI-approved safety glasses or a face shield when operating or observing machinery to reduce the risk of eye injury or blindness from flying particles. Everyday eyeglasses are NOT approved safety glasses.

⚠WARNING

WEARING PROPER APPAREL. Do not wear clothing, apparel or jewelry that can become entangled in moving parts. Always tie back or cover long hair. Wear non-slip footwear to reduce risk of slipping and losing control or accidentally contacting cutting tool or moving parts.

HAZARDOUS DUST. Dust created by machinery operations may cause cancer, birth defects, or long-term respiratory damage. Be aware of dust hazards associated with each workpiece material. Always wear a NIOSH-approved respirator to reduce your risk.

HEARING PROTECTION. Always wear hearing protection when operating or observing loud machinery. Extended exposure to this noise without hearing protection can cause permanent hearing loss.

REMOVE ADJUSTING TOOLS. Tools left on machinery can become dangerous projectiles upon startup. Never leave chuck keys, wrenches, or any other tools on machine. Always verify removal before starting!

USE CORRECT TOOL FOR THE JOB. Only use this tool for its intended purpose—do not force it or an attachment to do a job for which it was not designed. Never make unapproved modifications—modifying tool or using it differently than intended may result in malfunction or mechanical failure that can lead to personal injury or death!

AWKWARD POSITIONS. Keep proper footing and balance at all times when operating machine. Do not overreach! Avoid awkward hand positions that make workpiece control difficult or increase the risk of accidental injury.

CHILDREN & BYSTANDERS. Keep children and bystanders at a safe distance from the work area. Stop using machine if they become a distraction.

GUARDS & COVERS. Guards and covers reduce accidental contact with moving parts or flying debris. Make sure they are properly installed, undamaged, and working correctly BEFORE operating machine.

FORCING MACHINERY. Do not force machine. It will do the job safer and better at the rate for which it was designed.

NEVER STAND ON MACHINE. Serious injury may occur if machine is tipped or if the cutting tool is unintentionally contacted.

STABLE MACHINE. Unexpected movement during operation greatly increases risk of injury or loss of control. Before starting, verify machine is stable and mobile base (if used) is locked.

USE RECOMMENDED ACCESSORIES. Consult this owner's manual or the manufacturer for recommended accessories. Using improper accessories will increase the risk of serious injury.

UNATTENDED OPERATION. To reduce the risk of accidental injury, turn machine ***OFF*** and ensure all moving parts completely stop before walking away. Never leave machine running while unattended.

MAINTAIN WITH CARE. Follow all maintenance instructions and lubrication schedules to keep machine in good working condition. A machine that is improperly maintained could malfunction, leading to serious personal injury or death.

DAMAGED PARTS. Regularly inspect machine for damaged, loose, or mis-adjusted parts—or any condition that could affect safe operation. Immediately repair/replace BEFORE operating machine. For your own safety, DO NOT operate machine with damaged parts!

MAINTAIN POWER CORDS. When disconnecting cord-connected machines from power, grab and pull the plug—NOT the cord. Pulling the cord may damage the wires inside. Do not handle cord/plug with wet hands. Avoid cord damage by keeping it away from heated surfaces, high traffic areas, harsh chemicals, and wet/damp locations.

EXPERIENCING DIFFICULTIES. If at any time you experience difficulties performing the intended operation, stop using the machine! Contact our Technical Support at (570) 546-9663.

Additional Safety for Dust Collectors

⚠WARNING

Long-term respiratory damage can occur from using dust collectors without proper use of a respirator. Fire or explosions can result in smoke inhalation, serious burns, or death—if machine is used to collect incorrect materials, is operated near potential explosion sources, or ducting is improperly grounded. Entanglement, amputation, or death can occur if hair, clothing, or fingers are pulled into the inlet. To reduce the risk of these hazards, operator and bystanders MUST completely heed the hazards and warnings below.

INTENDED USE. Collecting the wrong materials can result in serious inhalation hazards, fire, explosions, or machine damage. This machine is ONLY designed to collect wood dust and chips from woodworking machines. DO NOT use it to collect silica, polyurethane, toxic fumes, metal dust or shavings, lead paint, drywall, asbestos, biohazards, explosive dusts, flammable or combustible liquids or fumes, nor burning or smoking material.

WEAR A RESPIRATOR. Fine dust that is too small to be caught in filter will be blown into ambient air. Always wear a NIOSH-approved respirator during operation and for a short time after to reduce your risk of permanent respiratory damage. Never collect dust from any hazardous material.

IMPELLER HAZARDS. To reduce risk of entanglement or contact with impeller, DO NOT place hands, hair, clothing, or tools in or near open dust collection inlet during operation, and keep small animals and children away. The powerful suction could easily pull them into impeller.

HAZARDOUS DUST. Dust exposure created while using machinery may cause cancer, birth defects, or long-term respiratory damage. Be aware of dust hazards associated with each workpiece material, and always wear a NIOSH-approved respirator.

EMPTYING DUST. When emptying bag or drum, wear respirator and safety glasses. Empty dust away from ignition sources and into approved container.

OPERATING LOCATION. To reduce respiratory exposure to fine dust, locate permanently installed dust collectors away from working area or in another room. DO NOT place dust collector where it can be exposed to rain or moisture, which creates a shock hazard and will reduce life of machine.

POWER DISCONNECT. Turn machine ***OFF***, disconnect from power supply, and allow impeller to completely stop before leaving machine unattended, or doing any maintenance or service.

REGULAR CLEANING. To reduce risk of starting a fire, regularly check/empty collection bags or drum to avoid buildup of fine dust, which can increase risk of fire. Regularly clean surrounding area where machine is operated—excessive dust buildup on overhead lights, heaters, electrical panels, or other heat sources will increase risk of fire.

SUSPENDED DUST PARTICLES. To reduce risk of death or injury caused by explosions or fires, DO NOT operate in areas where these risks are high, including spaces near pilot lights, open flames, or other ignition sources.

AVOIDING SPARKS. To reduce risk of fire, avoid collecting any metal objects or stones. These can possibly produce sparks when they strike impeller, which can smolder in wood dust for a long time before a fire is detected. If you accidentally cut into wood containing metal, immediately turn ***OFF*** dust collector, disconnect from power, and wait for impeller to stop. Then empty bag or drum into approved airtight metal container.

FIRE SUPPRESSION. Only operate dust collector in locations that contain fire suppression system or have fire extinguisher nearby.

STATIC ELECTRICITY. To reduce risk of fire or explosions caused by sparks from static electricity, ground all ducting using grounding wire.

DUST ALLERGIES. Dust from certain woods will cause an allergic reaction. Make sure you know what type of wood dust you will be exposed to in case of an allergic reaction.

SECTION 2: POWER SUPPLY

Availability

Before installing the machine, consider the availability and proximity of the required power supply circuit. If an existing circuit does not meet the requirements for this machine, a new circuit must be installed. To minimize the risk of electrocution, fire, or equipment damage, installation work and electrical wiring must be done by an electrician or qualified service personnel in accordance with all applicable codes and standards.

⚠WARNING

Electrocution, fire, shock, or equipment damage may occur if machine is not properly grounded and connected to power supply.

Full-Load Current Rating

The full-load current rating is the amperage a machine draws at 100% of the rated output power. On machines with multiple motors, this is the amperage drawn by the largest motor or sum of all motors and electrical devices that might operate at one time during normal operations.

Full-Load Current Rating at 110V..... 15 Amps

The full-load current is not the maximum amount of amps that the machine will draw. If the machine is overloaded, it will draw additional amps beyond the full-load rating.

If the machine is overloaded for a sufficient length of time, damage, overheating, or fire may result—especially if connected to an undersized circuit. To reduce the risk of these hazards, avoid overloading the machine during operation and make sure it is connected to a power supply circuit that meets the specified circuit requirements.

⚠WARNING

Serious injury could occur if you connect machine to power before completing setup process. DO NOT connect to power until instructed later in this manual.

110V Circuit Requirements

This machine is prewired to operate on a power supply circuit that has a verified ground and meets the following requirements:

Nominal Voltage 110V, 115V, 120V
Cycle .....60 Hz
Phase ..... Single-Phase
Power Supply Circuit ..... 20 Amps

A power supply circuit includes all electrical equipment between the breaker box or fuse panel in the building and the machine. The power supply circuit used for this machine must be sized to safely handle the full-load current drawn from the machine for an extended period of time. (If this machine is connected to a circuit protected by fuses, use a time delay fuse marked D.)

⚠CAUTION

For your own safety and protection of property, consult an electrician if you are unsure about wiring practices or electrical codes in your area.

Note: *Circuit requirements in this manual apply to a dedicated circuit—where only one machine will be running on the circuit at a time. If machine will be connected to a shared circuit where multiple machines may be running at the same time, consult an electrician or qualified service personnel to ensure circuit is properly sized for safe operation.*

Grounding & Plug Requirements

This machine MUST be grounded. In the event of certain malfunctions or breakdowns, grounding reduces the risk of electric shock by providing a path of least resistance for electric current.

This machine is equipped with a power cord that has an equipment-grounding wire and a grounding plug. Only insert plug into a matching receptacle (outlet) that is properly installed and grounded in accordance with all local codes and ordinances. DO NOT modify the provided plug!

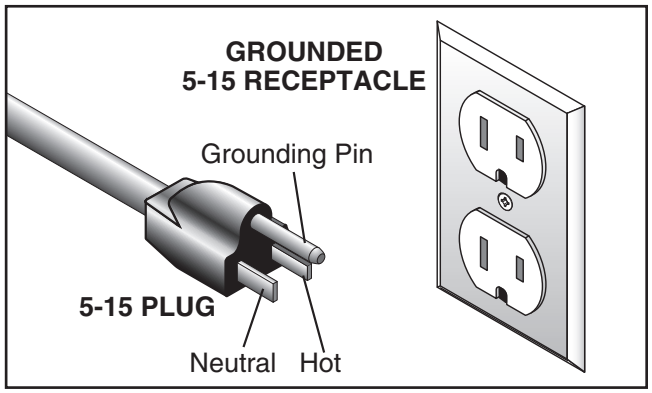

Figure 4. Typical 5-15 plug and receptacle.

⚠CAUTION

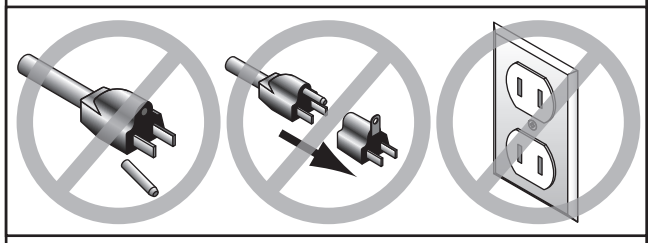

SHOCK HAZARD!
Two-prong outlets do not meet the grounding requirements for this machine. Do not modify or use an adapter on the plug provided—if it will not fit the outlet, have a qualified electrician install the proper outlet with a verified ground.

Improper connection of the equipment-grounding wire can result in a risk of electric shock. The wire with green insulation (with or without yellow stripes) is the equipment-grounding wire. If repair or replacement of the power cord or plug is necessary, do not connect the equipment-grounding wire to a live (current carrying) terminal.

Check with a qualified electrician or service personnel if you do not understand these grounding requirements, or if you are in doubt about whether the tool is properly grounded. If you ever notice that a cord or plug is damaged or worn, disconnect it from power, and immediately replace it with a new one.

Extension Cords

We do not recommend using an extension cord with this machine. If you must use an extension cord, only use it if absolutely necessary and only on a temporary basis.

Extension cords cause voltage drop, which can damage electrical components and shorten motor life. Voltage drop increases as the extension cord size gets longer and the gauge size gets smaller (higher gauge numbers indicate smaller sizes).

Any extension cord used with this machine must be in good condition and contain a ground wire and matching plug/receptacle. Additionally, it must meet the following size requirements:

Minimum Gauge Size .....12 AWG
Maximum Length (Shorter is Better).....50 ft.

SECTION 3: SETUP

Unpacking

This machine was carefully packaged for safe transport. When unpacking, separate all enclosed items from packaging materials and inspect them for shipping damage. ***If items are damaged, please call us immediately at (570) 546-9663.***

IMPORTANT: Save all packaging materials until you are completely satisfied with the machine and have resolved any issues between Grizzly or the shipping agent. *You MUST have the original packaging to file a freight claim. It is also extremely helpful if you need to return your machine later.*

Needed for Setup

The following items are needed, but not included, for the setup/assembly of this machine.

Description	Qty
• An Assistant	1
• Safety Glasses and Respirator	1
• Mounting Hardware	As Needed
• Tape Measure	1
• Drill and Bits	As Needed
• Marker/Pencil	1
• Support Board	As Needed
• Wrench or Socket ⅜"	1
• Wrench or Socket 10mm	1

Inventory

The following is a list of items shipped with your machine. Before beginning setup, lay these items out and inventory them.

If any non-proprietary parts are missing (e.g. a nut or a washer), we will gladly replace them; or for the sake of expediency, replacements can be obtained at your local hardware store.

Box 1 (Figure 5)	Qty
A. Hardware (Not Shown)	
—Flange Bolts ¼"-20 x ¾"	6
—T-Bolts ¼"-20 x ¾"	2
—Hex Huts ¼"-20	2
—Flange Screw 10-24 x ⅜"	1
B. Wall Bracket	1
C. Remote Control	1
D. Motor/Impeller Assembly	1
E. Inlet Adapter 6" x 4" x 4"	1
F. Collection Bag	1
G. Bag Clamp 15"	1
H. Filter Cleaning Handle	1

Box 2 (Figure 5)	Qty
I. Canister Filter	1

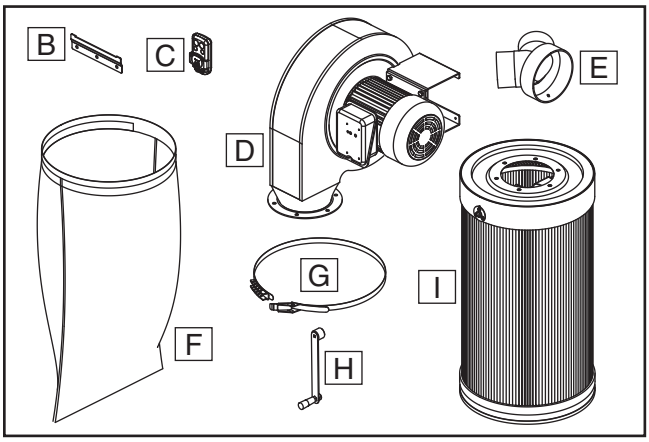

Figure 5. Inventory.

NOTICE

If you cannot find an item on this list, carefully check around/inside the machine and packaging materials. Often, these items get lost in packaging materials while unpacking or they are pre-installed at the factory.

Site Considerations

Weight Load

Refer to the **Machine Data Sheet** for the weight of your machine. Make sure that the surface upon which the machine is placed will bear the weight of the machine, additional equipment that may be installed on the machine, and the heaviest workpiece that will be used. Additionally, consider the weight of the operator and any dynamic loading that may occur when operating the machine.

Space Allocation

Consider the largest size of workpiece that will be processed through this machine and provide enough space around the machine for adequate operator material handling or the installation of auxiliary equipment. With permanent installations, leave enough space around the machine to open or remove doors/covers as required by the maintenance and service described in this manual. **See below for required space allocation.**

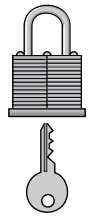

⚠CAUTION

Children or untrained people may be seriously injured by this machine. Only install in an access restricted location.

Physical Environment

The physical environment where the machine is operated is important for safe operation and longevity of machine components. For best results, operate this machine in a dry environment that is free from excessive moisture, hazardous chemicals, airborne abrasives, or extreme conditions. Extreme conditions for this type of machinery are generally those where the ambient temperature range exceeds 41°–104°F; the relative humidity range exceeds 20%–95% (non-condensing); or the environment is subject to vibration, shocks, or bumps.

Electrical Installation

Place this machine near an existing power source. Make sure all power cords are protected from traffic, material handling, moisture, chemicals, or other hazards. Make sure to leave enough space around machine to disconnect power supply or apply a lockout/tagout device, if required.

Lighting

Lighting around the machine must be adequate enough that operations can be performed safely. Shadows, glare, or strobe effects that may distract or impede the operator must be eliminated.

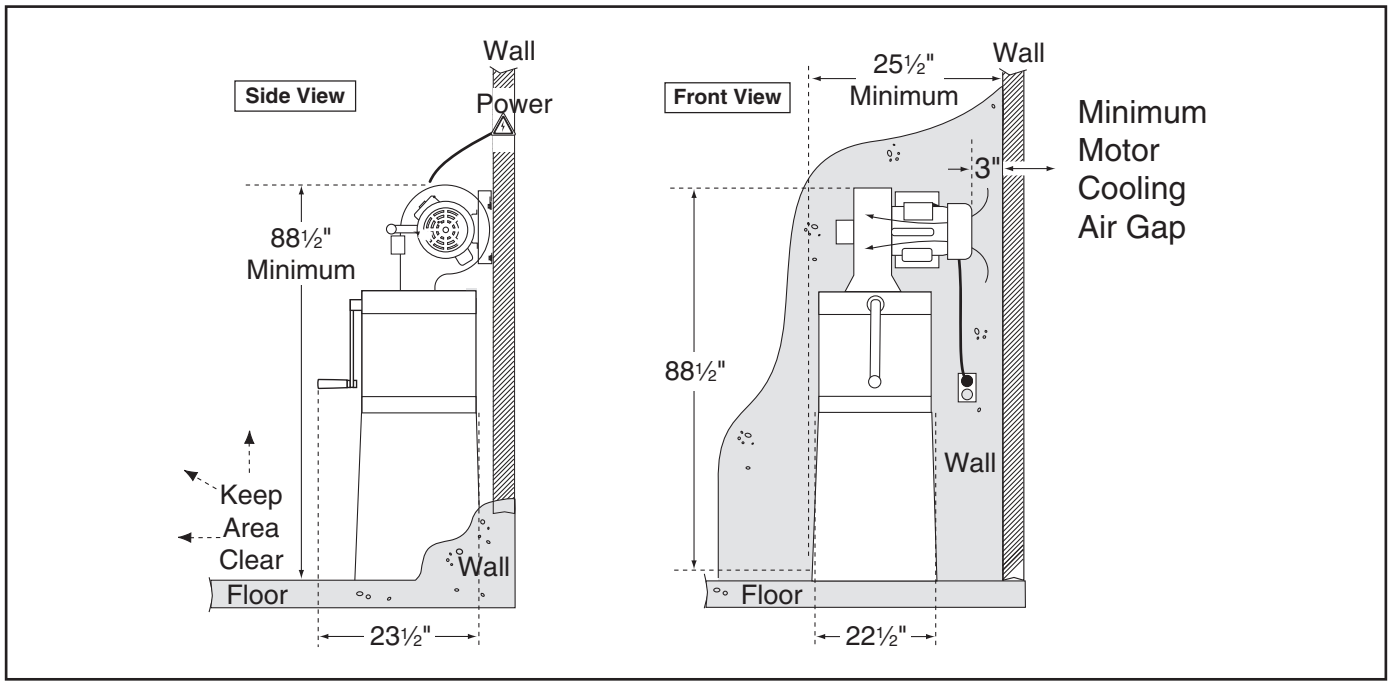

Figure 6. Minimum working clearances.

Assembly

The machine must be fully assembled before it can be operated. Before beginning the assembly process, refer to **Needed for Setup** and gather all listed items. To ensure the assembly process goes smoothly, first clean any parts that are covered or coated in heavy-duty rust preventative (if applicable).

To assemble and mount dust collector:

1. Using wall bracket as template, mark mounting hole locations a minimum of 85½" from floor and at least 7" away from adjacent wall (see **Figure 7**).

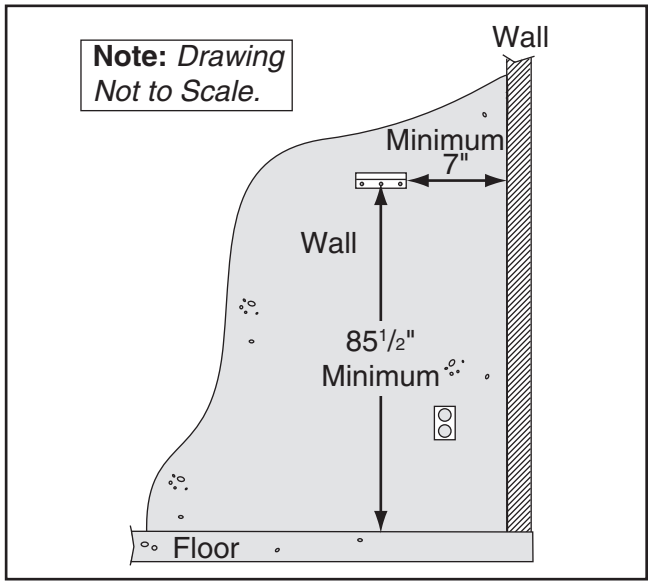

Figure 7. Wall bracket position.

— If mounting to a wood-framed wall (with or without drywall), bracket must be mounted directly to support board wide enough to span and mount between two wall studs. Mount support to wall studs with lag screws, then mount bracket to support with appropriate fasteners (see **Figure 8**).

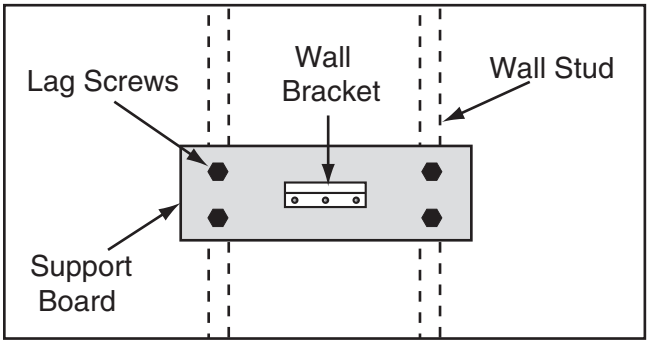

Figure 8. Wall bracket secured to support board on wall studs.

— If mounting to a concrete or masonry wall, attach bracket using lag shield anchors with lag screws or anchor studs (see **Figure 9**).

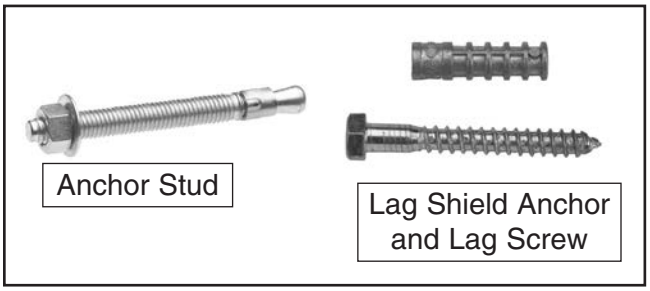

Figure 9. Typical fasteners for mounting dust collector bracket to masonry or concrete.

2. Attach canister filter to motor/impeller assembly with (6) ¼"-20 x ¾" flange bolts (see **Figure 10**).

3. Attach filter cleaning handle to canister filter with (1) hex bolt included with handle (see **Figure 10**).

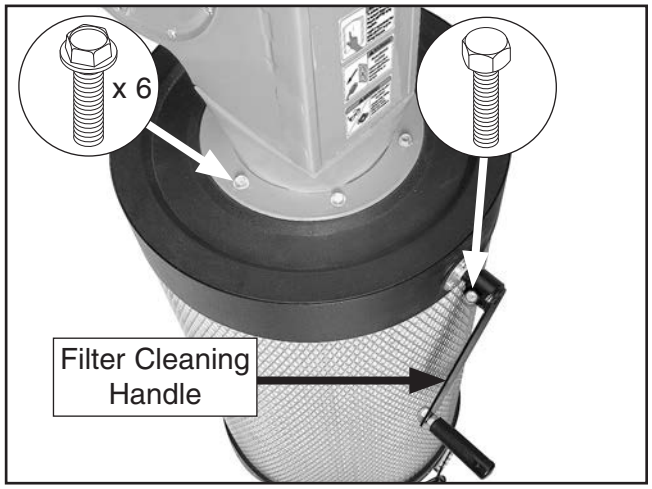

Figure 10. Canister attached to dust collector and filter cleaning handle attached to canister.

4. Attach (2) ¼"-20 x ¾" T-bolts and ¼"-20 hex nuts to bottom arm of dust collector mount (see **Figure 11**).

5. With help from an assistant, hang dust collector on wall bracket (see **Figure 11**). Ensure T-bolts support dust collector so that machine is perpendicular to wall.

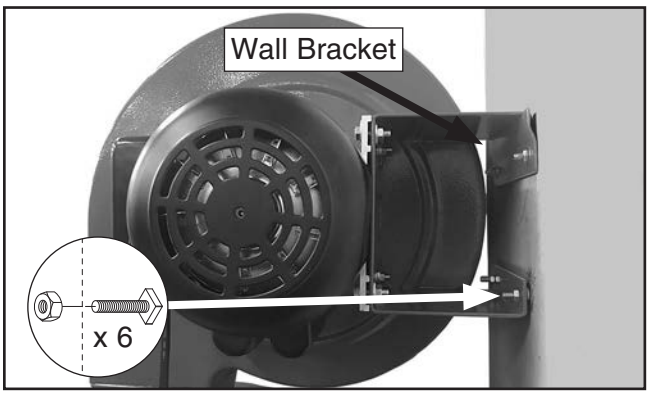

Figure 11. Dust collector hung on wall bracket.

6. Attach inlet adapter to dust collector inlet port and secure adapter with 10-24 x ⅜" flange screw.

Test Run

Once assembly is complete, test run the machine to ensure it is properly connected to power and safety components are functioning correctly.

If you find an unusual problem during the test run, immediately stop the machine, disconnect it from power, and fix the problem BEFORE operating the machine again. The **Troubleshooting** table in the **SERVICE** section of this manual can help.

The Test Run consists of verifying the following: 1) The motor powers up and runs correctly.

⚠WARNING

Serious injury or death can result from using this machine BEFORE understanding its controls and related safety information. DO NOT operate, or allow others to operate, machine until the information is understood.

⚠WARNING

DO NOT start machine until all preceding setup instructions have been performed. Operating an improperly set up machine may result in malfunction or unexpected results that can lead to serious injury, death, or machine/property damage.

To test run machine:

1. Clear all setup tools away from machine.

2. Connect machine to dust-collection system, and place covers over inlet adapter ports.

3. Connect machine to power.

IMPORTANT: DO NOT operate the dust collector without first covering an inlet adapter port. Otherwise, the lack of airflow resistance will cause the motor to operate at full amperage load, which could trip your circuit breaker or blow a fuse.

4. Turn machine ***ON***, verify motor operation, then turn machine ***OFF*** (see **Figure 12**).

   The motor should run smoothly and without unusual problems or noises.

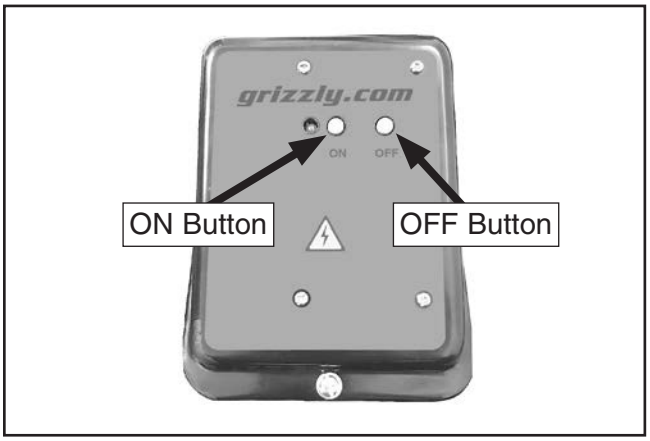

Figure 12. ON/OFF buttons on junction box.

5. To test remote control operation, press green remote button to turn motor ***ON***, then press red remote button to turn motor ***OFF***.

   — If the machine does not start or stop, verify batteries are correctly installed in remote.

SECTION 4: DESIGNING A SYSTEM

General

⚠CAUTION

Always make sure there are no open flames or pilot lights in the same room as the dust collector. There is a risk of explosion if too much fine dust is dispersed into the air with an open flame present.

⚠CAUTION

Always guard against static electrical build up by grounding all dust collection lines.

The Model G0944/G0944HEP works quite well as a point-of-use dust collector, or for collecting dust from up to two machines simultaneously.

Tips for Optimum Performance

- Avoid using more than 10' of flexible hose on any ducting line. The ridges inside flexible hose greatly increase static pressure loss, which reduces suction performance.
- Keep ducts between the dust collector and machines as short as possible.
- Keep ducting directional changes to a minimum. The more curved fittings you use, the greater the loss of suction at the dust-producing machine.
- Gradual directional changes are more efficient than sudden directional changes (i.e. use 45° elbows in place of 90° elbows whenever possible).
- The simpler the system, the more efficient and less costly it will be.

G0944 Performance Curve

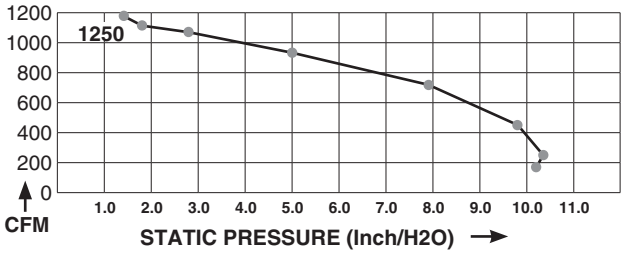

1.5 HP DUST COLLECTOR PERFORMANCE RESULTS					
Max CFM	**Max SP**	**HP**	**Volts**	**Inlet**	**Impeller**
1250	10.4	1½ HP	110V	6"	12¾"

Restrictor Plate Dia.	6"	5"	4"	3"	2"
Static Pressure (Inch/H2O)	3.5	4.7	7.4	9.6	9.9
CFM	1096	1001	782	475	224

The air flow test probe is located 1.5x duct diameter upstream from the air inlet. Test pipe length is a minimum of 10x duct diameter.

Figure 13. G0944 performance curve table and data.

G0944HEP Performance Curve

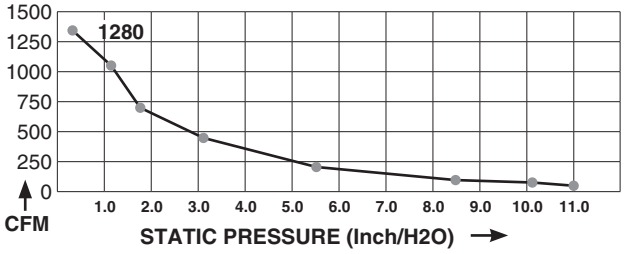

1.5 HP DUST COLLECTOR PERFORMANCE RESULTS					
Max CFM	**Max SP**	**HP**	**Volts**	**Inlet**	**Impeller**
1280	10.4	1½ HP	110V	6"	12¾"

Restrictor Plate Dia.	7"	6"	5"	4"	3"	2"
Static Pressure (Inch/H2O)	1.2	1.8	3.1	5.6	8.7	10.2
CFM	972	675	409	214	95	34

The air flow test probe is located 1.5x duct diameter upstream from the air inlet. Test pipe length is a minimum of 10x duct diameter.

Figure 14. G0944HEP performance curve table and data.

System Grounding

Since plastic hose is abundant, relatively inexpensive, easily assembled and air tight, it is a very popular material for conveying dust from woodworking machines to the dust collector.

We recommend only using short lengths of flexible hose (flex-hose) to connect the woodworking machine to the dust collector. However, plastic flex-hose and plastic duct are an insulator, and dust particles moving against the walls of the plastic duct create a static electrical buildup. This charge will build until it discharges to a ground.

If a grounding medium is not available to prevent static electrical buildup, the electrical charge will arc to the nearest grounded source. This electrical discharge may cause an explosion and subsequent fire inside the system.

To protect against static electrical buildup inside a non-conducting duct, a bare copper wire should be placed inside the duct along its length and grounded to the dust collector. You must also confirm that the dust collector is continuously grounded through the electrical circuit to the electric service panel.

If you connect the dust collector to more than one machine by way of a non-conducting branching duct system and blast gates, the system must still be grounded as mentioned above. We recommend inserting a continuous bare copper ground wire inside the entire duct system and attaching the wire to each grounded woodworking machine and dust collector.

⚠CAUTION

Always guard against static electrical build up by grounding all dust collection lines.

Be sure that you extend the bare copper wire down all branches of the system. Do not forget to connect the wires to each other with wire nuts when two branches meet at a “Y” or “T” connection.

Ensure that the entire system is grounded. If using plastic blast gates to direct air flow, the grounding wire must be jumped (see the figure below) around the blast gate without interruption to the grounding system.

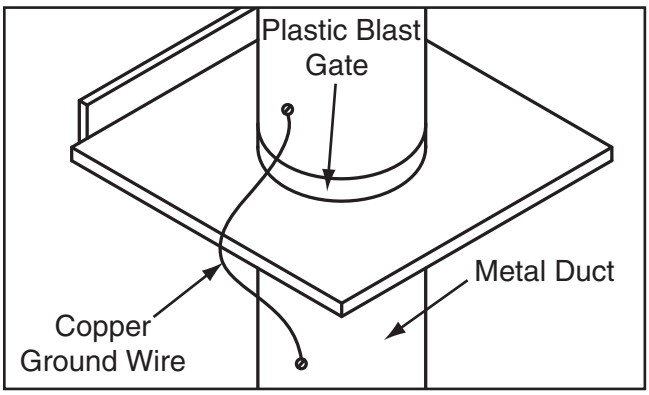

Figure 15. Ground jumper wire when using plastic blast gates and metal duct.

We also recommend wrapping the outside of all plastic ducts with bare copper wire to ground the outside of the system against static electrical buildup. Wire connections at Y’s and T’s should be made with wire nuts.

Attach the bare ground wire to each stationary woodworking machine and attach to the dust collector frame with a ground screw as shown in the figure below. Ensure that each machine is continuously grounded to the grounding terminal in your electric service panel.

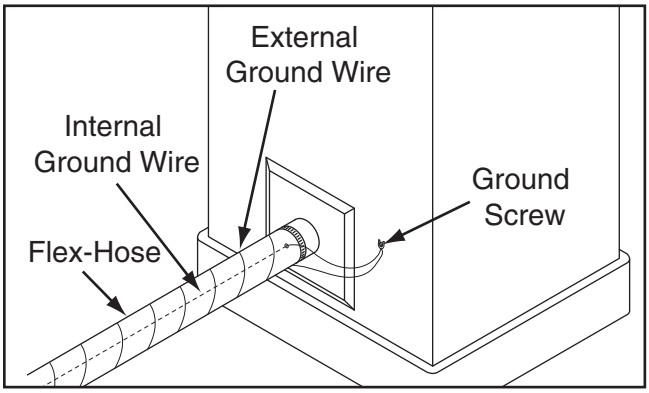

Figure 16. Flex-hose grounded to machine.

SECTION 5: OPERATIONS

Operation Overview

The purpose of this overview is to provide the novice machine operator with a basic understanding of how the machine is used during operation, so the machine controls/components discussed later in this manual are easier to understand.

Due to the generic nature of this overview, it is **not** intended to be an instructional guide. To learn more about specific operations, read this entire manual, seek additional training from experienced machine operators, and do additional research outside of this manual by reading "how-to" books, trade magazines, or websites.

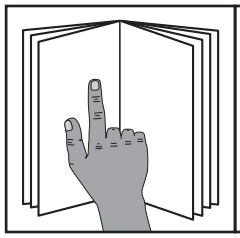

WARNING

To reduce your risk of serious injury, read this entire manual BEFORE using machine.

WARNING

To reduce risk of eye injury from flying chips or lung damage from breathing dust, always wear safety glasses and a respirator when operating this machine.

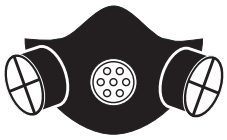

NOTICE

If you are not experienced with this type of machine, WE STRONGLY RECOMMEND that you seek additional training outside of this manual. Read books/magazines or get formal training before beginning any projects. Regardless of the content in this section, Grizzly Industrial will not be held liable for accidents caused by lack of training.

This wall-mounted dust collector pulls wood dust past the impeller, through the canister filter, and into the plastic collection bag below.

The spunbond polyester filter in the G0944 catches 99.9% of 1-micron particles, and is pleated to provide maximum surface area for efficient air flow. The G0944HEP features a MERV-17 rated HEPA filter that catches 99.97% of 0.3-micron particles.

To maintain CFM during heavy use, the filter cleaning handle knocks caked-on dust into the collection bag.

To complete a typical operation, the operator does the following:

1. Positions machine near dust collector and uses appropriate ducting to connect machine to dust collector.
2. Connects ducting ground.
3. Turns woodworking machine ***ON***.
4. Turns dust collector ***ON***.
5. Performs woodworking operation.
6. Turns woodworking machine ***OFF***.
7. Turns dust collector ***OFF***.

SECTION 6: ACCESSORIES

⚠WARNING

Installing unapproved accessories may cause machine to malfunction, resulting in serious personal injury or machine damage. To reduce this risk, only install accessories recommended for this machine by Grizzly.

NOTICE

Refer to our website or latest catalog for additional recommended accessories.

W1050—Dust Collection Basics Book
This incisive book skillfully guides the woodworker through all the steps necessary in the design and construction of an efficient central dust-collection system and tells you what you need to know for easy installation. 64 pages.

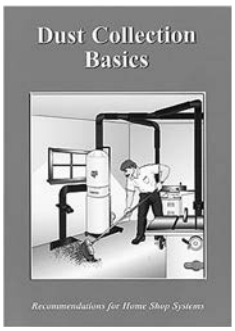

Figure 17. W1050 Dust Collection Basics Book.

H7215—4" x 5' Rigid Flex Hose
H7217—6" x 5' Rigid Flex Hose
These Rigid Flex Hoses with rolled collars provide just enough flexibility to make difficult connections while still keeping the inside wall smooth.

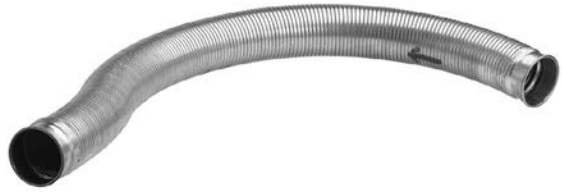

Figure 18. Rigid flex hose.

T32555—Replacement 1-Micron Filter
T32168—Replacement HEPA Filter

Figure 19. 14½" dia. x 28" length replacement canister filters.

T24268—Collection Bag, Single
T21820—Collection Bag, 3-Pack

Figure 20. 14½" dia. replacement collection bag.

H5293—4" Industrial Dust Collection Fittings Starter Kit
This starter kit includes everything you will need for a simple, single-machine setup. The branch and end cap make your dust collection system expansion ready for future growth.

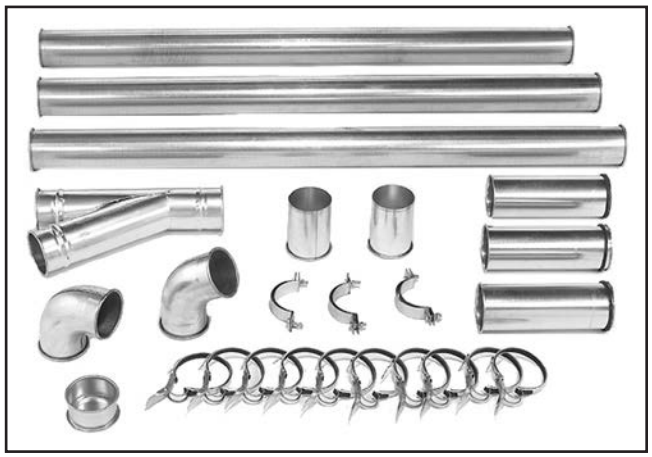

Figure 21. H5293 4" Industrial Dust Collection Fittings Starter Kit.

W1034—4" x 10' Dust Hose
W1036—6" x 10' Dust Hose
Spiral-wire-reinforced clear hose allows easy inspection for locating potential clogs in your duct system. Uses RH fittings. Available in additional diameters and lengths.

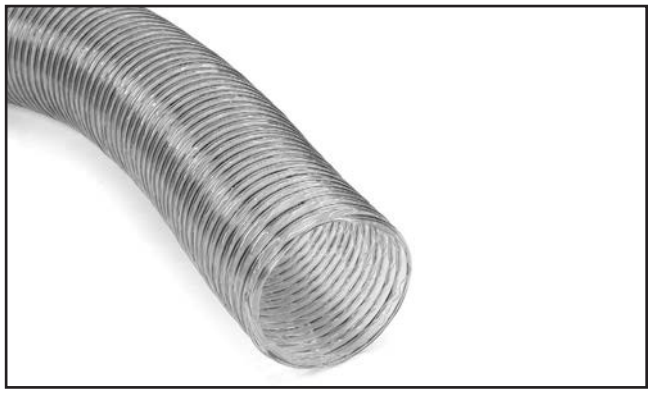

Figure 22. Flexible clear dust hose.

D4206—Clear Flexible Hose 4" x 10'
D4256—45° Elbow 4"
D4216—Black Flexible Hose 4" x 10'
D2107—Hose Hanger 4¼"
W1015—Y-Fitting 4" x 4" x 4"
W1017—90° Elbow 4"
W1019—Hose Coupler (Splice) 4"
W1317—Wire Hose Clamp 4"
W1007—Plastic Blast Gate 4"
W1053—Anti-Static Grounding Kit

Figure 23. 4" dust-collection accessories.

W1039—Universal Adapter
This adapter provides a multitude of reducing options. Simply cut off unneeded steps. Outside diameter sizes include 1", 2", 2.5", 3", 4", 5", and 6". Wall thickness is ⅛".

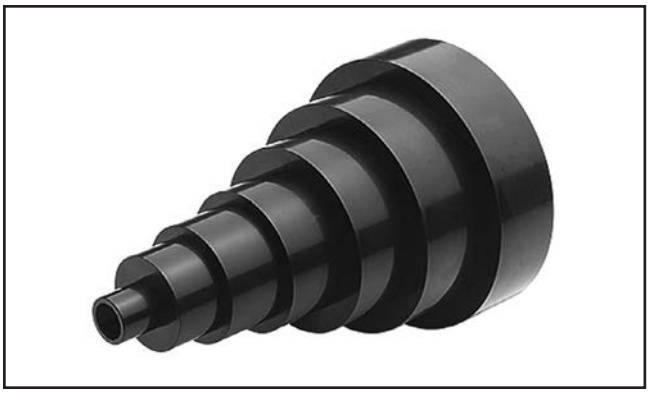

Figure 24. W1039 Universal Adapter.

SECTION 7: MAINTENANCE

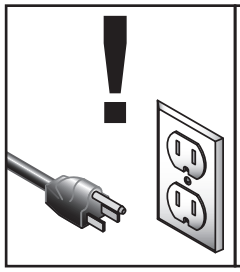

⚠WARNING

To reduce risk of shock or accidental startup, always disconnect machine from power before adjustments, maintenance, or service.

Schedule

For optimum performance from this machine, this maintenance schedule must be strictly followed.

Ongoing
To minimize your risk of injury and maintain proper machine operation, shut down the machine immediately if you ever observe any of the items below, and fix the problem before continuing operations:

- Loose mounting bolts.
- Damaged filter canister, cleaning paddle components, or collection bag.
- Worn or damaged wires.
- Suction leaks or dust blowing out of collector.
- Any other unsafe condition.

Monthly Check
- Clean/vacuum dust buildup off machine body and motor.

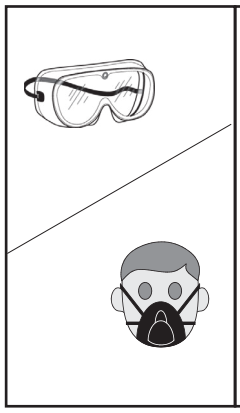

⚠CAUTION

Dust exposure created while using machinery may cause cancer, birth defects, or long-term respiratory damage. Always wear goggles and a NIOSH-approved respirator when working with the dust collection bags or canisters.

Cleaning Canister Filter

This dust collector uses a filter cleaning handle to remove dust buildup and debris from the filter pleats and extend the life of the filter. Clean the filter with the filter cleaning handle after each use, or whenever dust collection performance drops. Eventually, dust will become fully embedded in the filter pleats, and the filter assembly will have to be replaced. If you reach the point where cleaning the filter does not improve performance, then it is time to replace the filter.

IMPORTANT: DO NOT use water or high pressure to clean canister filter. Doing so will damage the filter and reduce filtration.

Replacing Collection Bag

Remove and replace the collection bag when it is approximately ½ full.

Item Needed	**Qty**
Collection Bag (T24268 or T21820)	1

To remove and replace collection bag:

1. DISCONNECT MACHINE FROM POWER!

2. Release bag clamp around bottom of canister filter, then remove collection bag.

   IMPORTANT: To contain wood dust and minimize risk of exposure, tie bag closed before disposal.

3. Attach new collection bag around bottom of canister filter and secure with bag clamp.

Pairing Remote Control

The Model G0944/G0944HEP is equipped with a remote control receiver that operates on an RF frequency from up to 75' away.

⚠WARNING

Avoid touching electrified parts inside machine while performing procedure below! Touching electrified parts will result in personal injury including but not limited to severe burns, electrocution, or death. Use a wood dowel or other non-conducting item to push button on circuit board.

Items Needed	Qty
Phillips Head Screwdriver #2	1
Wood Dowel	1

To pair remote control:

1. Connect machine to power and verify motor is turned ***OFF***.

2. Remove junction box cover and locate circuit board attached to rear of cover (see **Figure 25**).

3. Press and hold "CODE SAVE" button (see **Figure 25**) on circuit board with wood dowel until it beeps once.

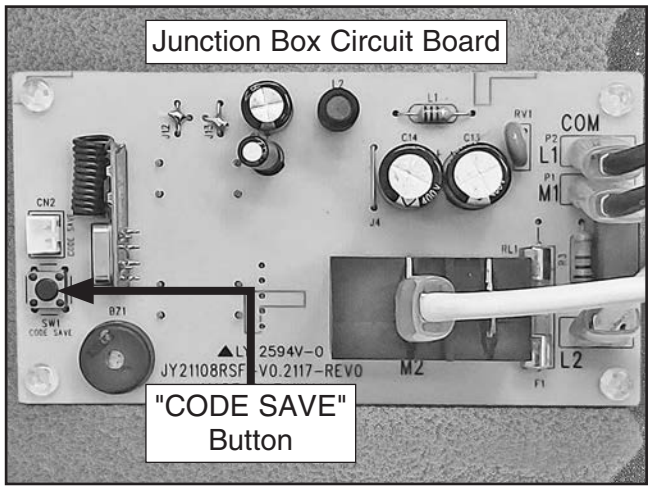

Figure 25. Location of "CODE SAVE" button on junction box circuit board.

4. Press and hold D button (see **Figure 26**) on remote control until it beeps twice. Pairing is complete.

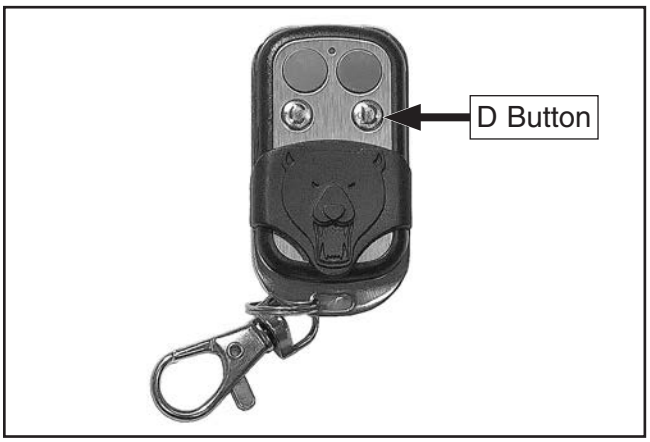

Figure 26. Location of D button on remote control.

5. Re-install junction box cover and secure.

Replacing Remote Control Battery

The remote control is powered by a 12V type A27 battery. If the receiver stops responding to the remote control, replace the battery as the first course of action.

Items Needed	Qty
Phillips Head Screwdriver #00	1
A27 12V Battery	1

To replace remote control battery:

1. Turn remote control face down, remove (3) Phillips head screws, then remove battery cover.

2. Replace battery, then re-assemble remote control.

SECTION 8: SERVICE

Review the troubleshooting procedures in this section if a problem develops with your machine. If you need replacement parts or additional help with a procedure, call our Technical Support. **Note:** *Please gather the serial number and manufacture date of your machine before calling.*

Troubleshooting

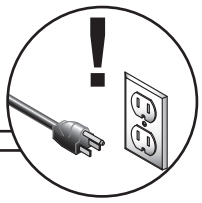

Motor & Electrical

Symptom	Possible Cause	Possible Solution
Machine does not start, or power supply breaker immediately trips after startup.	1. Machine circuit breaker tripped or at fault. 2. Blown fuse on circuit board. 3. Incorrect power supply voltage or circuit size. 4. Remote control not working. 5. Remote receiver at fault. 6. Power supply circuit breaker tripped or fuse blown. 7. Motor wires connected incorrectly. 8. Start capacitor at fault. 9. Centrifugal switch adjustment/contact points at fault. 10. Wiring broken, disconnected, or corroded. 11. Circuit breaker at fault. 12. Circuit board at fault. 13. Motor or motor bearings at fault.	1. Reset machine circuit breaker. 2. Replace fuse/ensure no shorts. 3. Ensure correct power supply voltage and circuit size. 4. Replace batteries; stay in signal range. 5. Inspect/replace circuit board if at fault. 6. Ensure circuit is free of shorts. Reset circuit breaker or replace fuse. 7. Correct motor wiring connections. 8. Test/replace if at fault. 9. Adjust centrifugal switch/clean contact points. Replace either if at fault. 10. Fix broken wires or disconnected/corroded connections. 11. Replace circuit breaker. 12. Replace circuit board. 13. Replace motor.
Machine stalls or is underpowered.	1. Dust collection ducting problem. 2. Collection bag full. 3. Canister filter clogged. 4. Dust collector undersized. 5. Motor overheated, tripping machine circuit breaker. 6. Run capacitor at fault. 7. Extension cord too long. 8. Centrifugal switch/contact points at fault. 9. Motor or motor bearings at fault.	1. Clear blockages, seal leaks, use smooth wall duct, eliminate bends, close other branches. 2. Empty and replace collection bag (**Page 24**). 3. Clean canister filter or replace if at end of life (**Page 24**). 4. Move closer to machine/redesign ducting layout/upgrade dust collector. 5. Clean motor, let cool, and reduce workload. Reset breaker. 6. Test/repair/replace. 7. Move machine closer to power supply; use shorter extension cord. 8. Adjust centrifugal switch/clean contact points. Replace either if at fault. 9. Replace motor.
Machine has vibration or noisy operation.	1. Motor or component loose. 2. Motor fan rubbing on fan cover. 3. Centrifugal switch at fault. 4. Motor bearings at fault.	1. Replace damaged or missing bolts/nuts or tighten if loose. 2. Fix/replace fan cover; replace loose/damaged fan. 3. Replace. 4. Test by rotating shaft; rotational grinding/loose shaft requires bearing replacement.

Dust Collector Operation

Symptom	Possible Cause	Possible Solution
Loud, repetitious noise, or excessive vibration coming from dust collector (non-motor related).	1. Machine incorrectly mounted to wall/ mounted unevenly. 2. Impeller damaged and unbalanced. 3. Impeller loose on motor shaft.	1. Tighten/replace mounting hardware. 2. Disconnect dust collector from power; inspect impeller for cracks or damage; replace impeller if damaged. 3. Secure impeller; replace motor and impeller as a set if motor shaft and impeller hub are damaged.
Dust collector does not adequately collect dust or chips; poor performance.	1. Dust collection bag full. 2. Canister filter clogged. 3. Ducting blocked/restricted. 4. Dust collector too far away from point of suction; duct clamps not properly secured; too many sharp bends in ducting. 5. Wood wet/green and dust not flowing smoothly through ducting. 6. Ducting has one or more leaks, or too many open ports. 7. Ducting and ports are incorrectly sized. 8. Dust collector undersized. 9. Unused inlet adapter port(s) uncovered.	1. Replace collection bag. 2. Clean canister filter or replace if at end of life (**Page 24**). 3. Remove ducting from dust collector inlet and unblock restriction. A plumbing snake may be necessary. 4. Relocate dust collector closer to point of suction; re-secure ducts; remove sharp bends. 5. Only collect dust from wood with less than 20% moisture content. 6. Seal/eliminate all ducting leaks; close dust ports for lines not being used. 7. Install correctly sized ducts and fittings. 8. Install larger dust collector. 9. Cover unused inlet adapter port(s).
Musty odor detected during operation.	1. Canister filter caked with dust containing excessive moisture, causing mold growth on filter.	1. Clean canister filter or replace if at end of life (**Page 24**).
Cleaning canister filter does not improve dust collection performance.	1. Canister filter clogged and at end of life.	1. Replace filter (**Page 24**).
Dust collector blows sawdust into the air.	1. Duct clamp(s) or dust collection bag(s) not properly clamped and secured; ducting loose/damaged. 2. Inlet cover seal loose/damaged.	1. Secure ducts and dust collection bag, making sure duct/bag clamp(s) are tight; tighten/replace ducting. 2. Tighten all mounting and sealing points; use silicon to seal.
Remote control does not operate dust collector.	1. Machine is disconnected from power. 2. Remote control battery is weak or dead. 3. A wall or barrier disrupts the radio frequency, or controller is too far away. 4. Remote control not paired with receiver.	1. Verify machine is connected to power source. 2. Replace battery (**Page 25**). 3. Move machine away from barrier; use remote with 50' of machine. 4. Program receiver to accept remote control (**Page 25**).

SECTION 9: WIRING

These pages are current at the time of printing. However, in the spirit of improvement, we may make changes to the electrical systems of future machines. Compare the manufacture date of your machine to the one stated in this manual, and study this section carefully.

If there are differences between your machine and what is shown in this section, call Technical Support at (570) 546-9663 for assistance BEFORE making any changes to the wiring on your machine. An updated wiring diagram may be available. **Note:** *Please gather the serial number and manufacture date of your machine before calling. This information can be found on the main machine label.*

⚠WARNING
Wiring Safety Instructions

SHOCK HAZARD. Working on wiring that is connected to a power source is extremely dangerous. Touching electrified parts will result in personal injury including but not limited to severe burns, electrocution, or death. Disconnect the power from the machine before servicing electrical components!

MODIFICATIONS. Modifying the wiring beyond what is shown in the diagram may lead to unpredictable results, including serious injury or fire. This includes the installation of unapproved aftermarket parts.

WIRE CONNECTIONS. All connections must be tight to prevent wires from loosening during machine operation. Double-check all wires disconnected or connected during any wiring task to ensure tight connections.

CIRCUIT REQUIREMENTS. You MUST follow the requirements at the beginning of this manual when connecting your machine to a power source.

WIRE/COMPONENT DAMAGE. Damaged wires or components increase the risk of serious personal injury, fire, or machine damage. If you notice that any wires or components are damaged while performing a wiring task, replace those wires or components.

MOTOR WIRING. The motor wiring shown in these diagrams is current at the time of printing but may not match your machine. If you find this to be the case, use the wiring diagram inside the motor junction box.

CAPACITORS/INVERTERS. Some capacitors and power inverters store an electrical charge for up to 10 minutes after being disconnected from the power source. To reduce the risk of being shocked, wait at least this long before working on capacitors.

EXPERIENCING DIFFICULTIES. If you are experiencing difficulties understanding the information included in this section, contact our Technical Support at (570) 546-9663.

NOTICE

The photos and diagrams included in this section are best viewed in color. You can view these pages in color at www.grizzly.com.

COLOR KEY

BLACK	Bk	BLUE	Bl	YELLOW	Yl	LIGHT BLUE	Lb
WHITE	Wt	BROWN	Br	YELLOW GREEN	Yg	BLUE WHITE	Bw
GREEN	Gn	GRAY	Gy	PURPLE	Pu	TUR-QUOISE	Tu
RED	Rd	ORANGE	Or	PINK	Pk		

G0944/G0944HEP Wiring Diagram

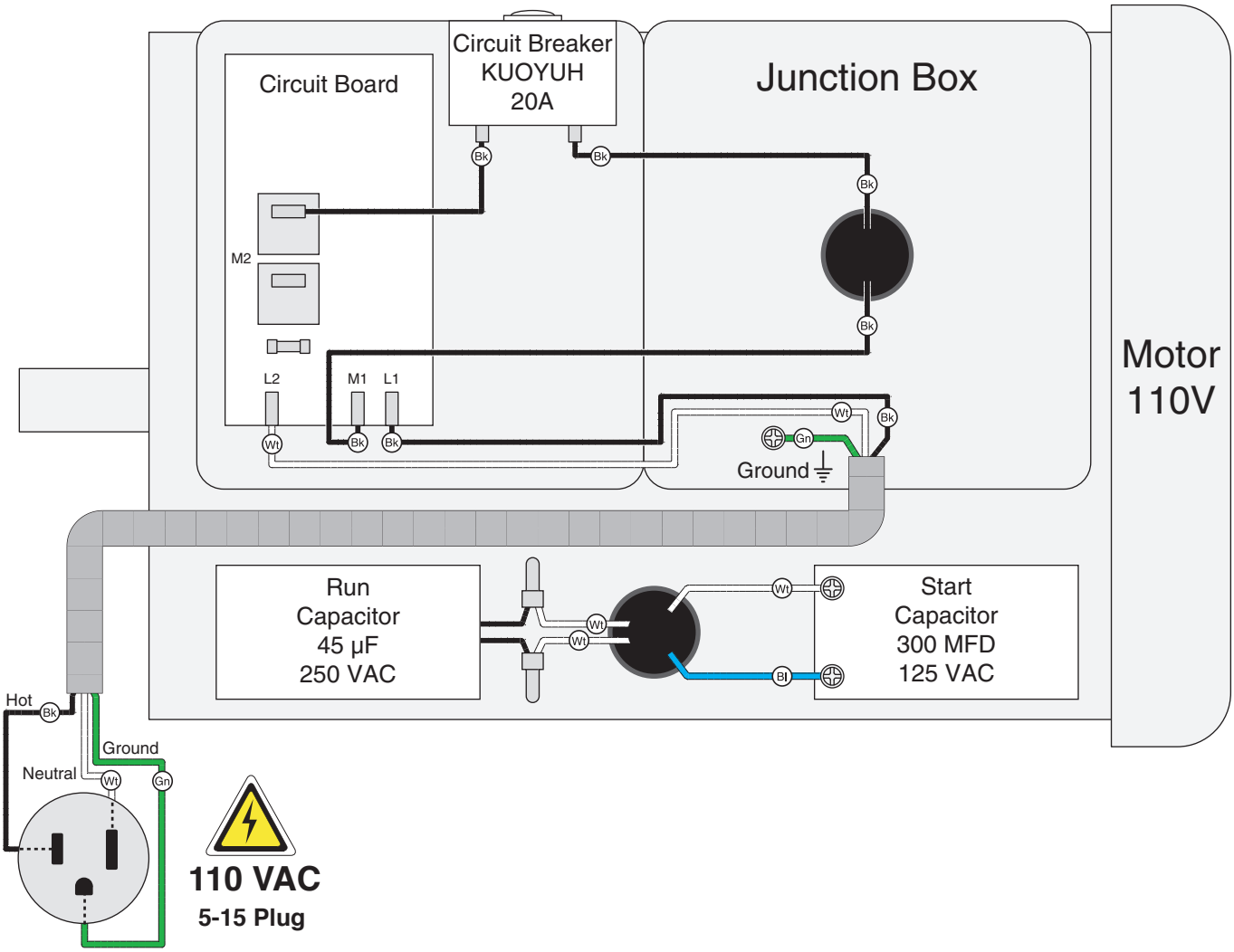

STOP ***READ ELECTRICAL SAFETY ON PAGE 28!***

SECTION 10: PARTS

We do our best to stock replacement parts when possible, but we cannot guarantee that all parts shown are available for purchase. Call **(800) 523-4777** or visit **www.grizzly.com/parts** to check for availability.

Main

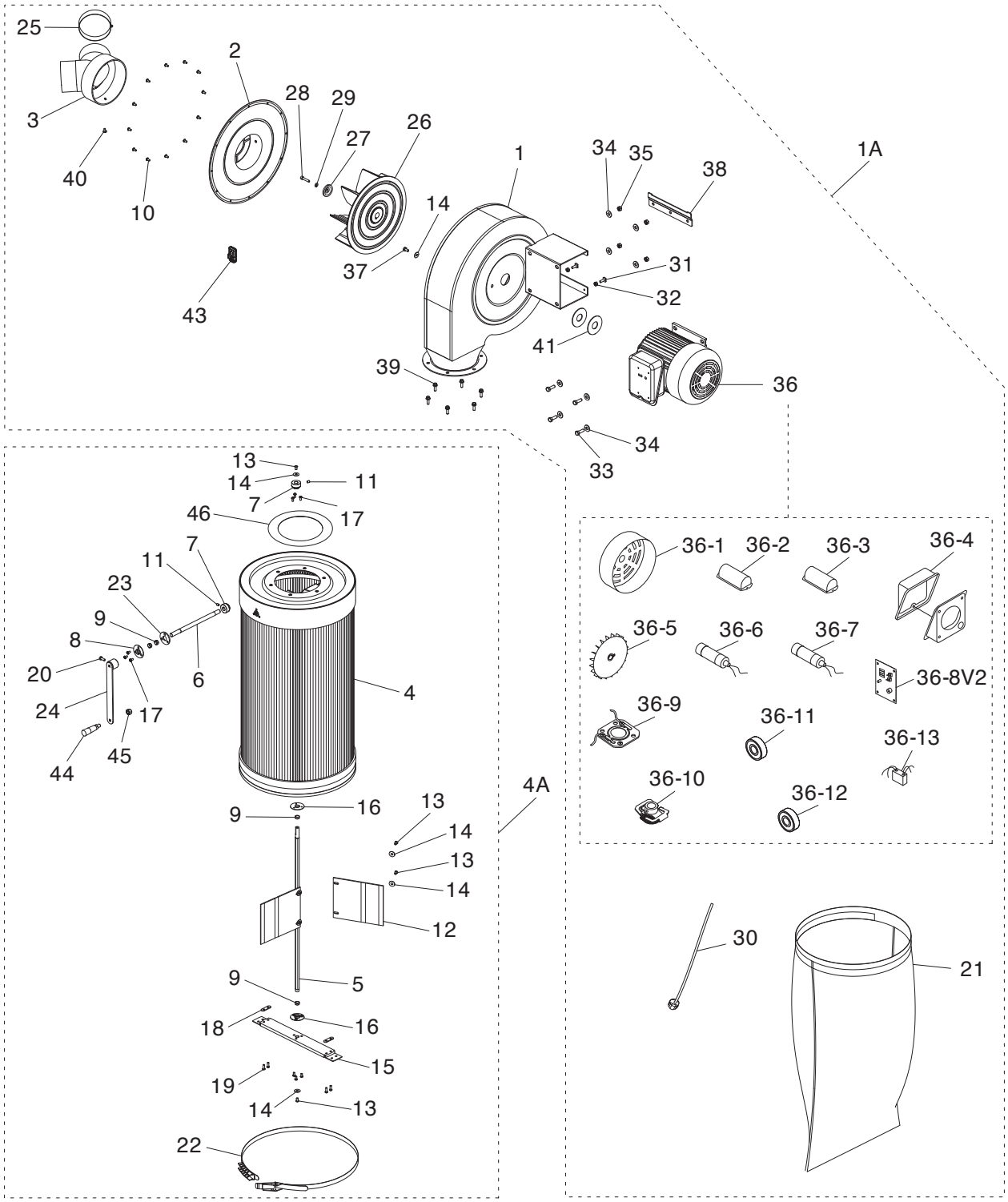

Main Parts List

REF	PART #	DESCRIPTION
1	P0944001	IMPELLER HOUSING
1A	P0944001A	IMPELLER HOUSING ASSEMBLY
2	P0944002	INLET COVER
3	P0944003	INLET ADAPTER 6" X 4" X 2
4	P0944004	CANISTER FILTER (G0944)
4	P0944HEP004	HEPA FILTER (G0944HEP)
4A	P0944004A	CANISTER FILTER ASSEMBLY (G0944)
4A	P0944HEP004A	HEPA FILTER ASSEMBLY (G0944HEP)
5	P0944005	MAIN SPINDLE
6	P0944006	CRANK SPINDLE
7	P0944007	BEVEL GEAR
8	P0944008	BEARING PLATE
9	P0944009	SLEEVE BEARING 12 X 14 X 6MM
10	P0944010	PHLP HD SCR 10-24 X 3/8
11	P0944011	SET SCREW 1/4-20 X 5/16
12	P0944012	FLAPPER
13	P0944013	PHLP HD SCR M6-1 X 10
14	P0944014	FLAT WASHER 1/4
15	P0944015	SPINDLE BRACKET
16	P0944016	BEARING PLATE
17	P0944017	PHLP HD SCR M5-.8 X 8
18	P0944018	MOUNTING PLATE
19	P0944019	PHLP HD SCR M5-.8 X 15
20	P0944020	HEX BOLT M6-1 X 16
21	P0944021	COLLECTION BAG
22	P0944022	BAG CLAMP 15"
23	P0944023	RUBBER BUSHING
24	P0944024	CRANK HANDLE
25	P0944025	END CAP 4"
26	P0944026	ALUMINUM IMPELLER 12-3/4"
27	P0944027	IMPELLER WASHER 1/4

REF	PART #	DESCRIPTION
28	P0944028	CAP SCREW M6-1 X 30
29	P0944029	LOCK WASHER 1/4
30	P0944030	POWER CORD 14G 3W 72" 5-15P
31	P0944031	T-BOLT 1/4-20 X 3/4
32	P0944032	HEX NUT 1/4
33	P0944033	HEX BOLT 5/16-18 X 1
34	P0944034	FLAT WASHER 5/16
35	P0944035	HEX NUT 5/16-18
36	P0944036	MOTOR 1-1/2 HP 110V 1-PH
36-1	P0944036-1	MOTOR FAN COVER
36-2	P0944036-2	R CAPACITOR COVER
36-3	P0944036-3	S CAPACITOR COVER
36-4	P0944036-4	JUNCTION BOX
36-5	P0944036-5	MOTOR FAN
36-6	P0944036-6	R CAPCITOR 45M 250V
36-7	P0944036-7	S CAPACITOR 300M 125V
36-8V2	P0944036-8V2	CIRCUIT BOARD REV0 V2.10.21
36-9	P0944036-9	CONTACT PLATE
36-10	P0944036-10	CENTRIFUGAL SWITCH
36-11	P0944036-11	FRONT MOTOR BEARING 6203-2RS
36-12	P0944036-12	REAR MOTOR BEARING 6205-2RS
36-13	P0944036-13	CIRCUIT BREAKER KUOYUH 20A
37	P0944037	HEX BOLT 1/4-20 X 1/2
38	P0944038	WALL BRACKET
39	P0944039	FLANGE BOLT 1/4-20 X 3/4
40	P0944040	FLANGE SCREW 10-24 X 3/8
41	P0944041	MOTOR GASKET
43	P0944043	REMOTE
44	P0944044	CRANK HANDLE M10-1.5 X 14
45	P0944045	LOCK NUT M10-1.5
46	P0944046	FLANGE GASKET (FOAM)

Labels & Cosmetics

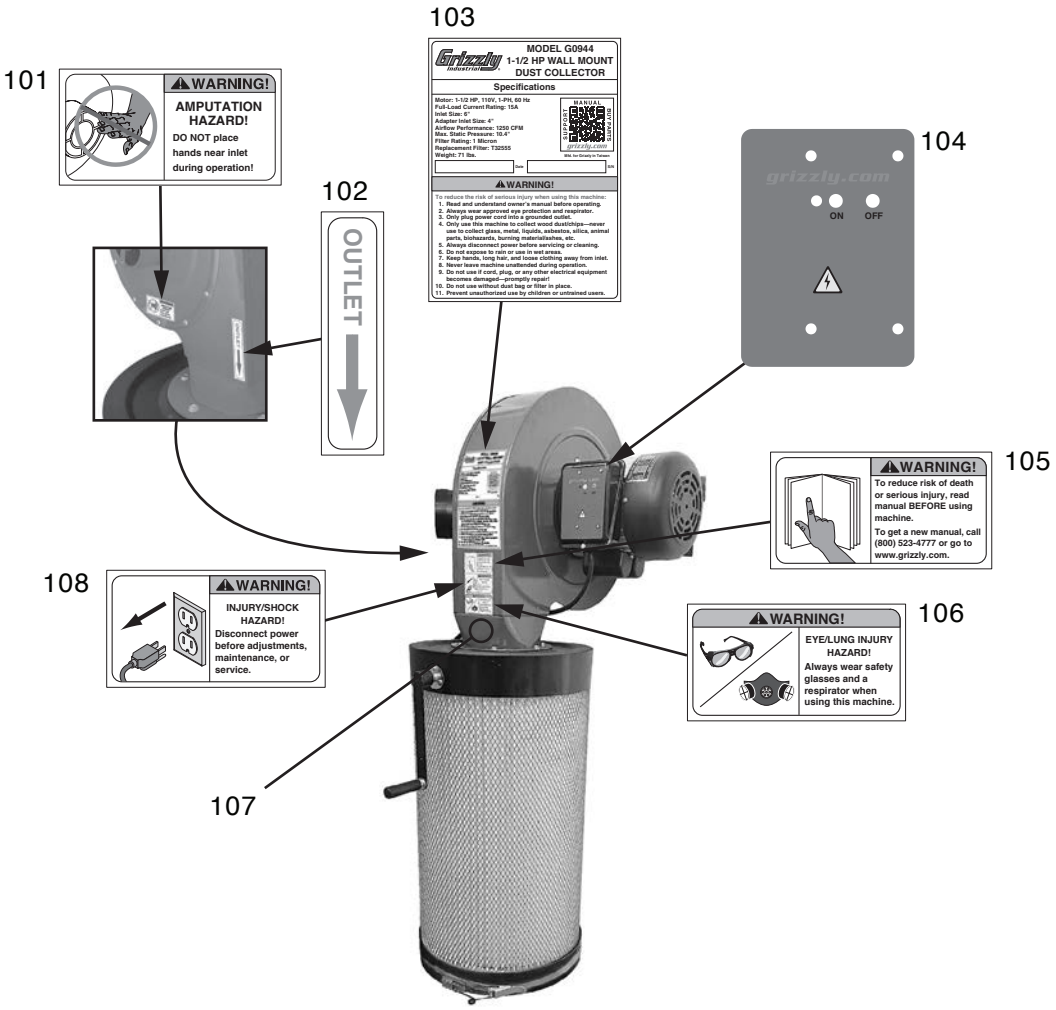

REF	PART #	DESCRIPTION
101	P0944101	INLET WARNING LABEL
102	P0944102	OUTLET DIRECTION LABEL
103	P0944103	G0944 ID LABEL
103	P0944HEP103	G0944HEP ID LABEL
104	P0944104	JUNCTION BOX LABEL

REF	PART #	DESCRIPTION
105	P0944105	READ MANUAL LABEL
106	P0944106	EYE/LUNG WARNING LABEL
107	P0944107	TOUCH-UP PAINT, GRIZZLY GREEN
108	P0944108	DISCONNECT POWER LABEL

⚠WARNING

Safety labels help reduce the risk of serious injury caused by machine hazards. If any label comes off or becomes unreadable, the owner of this machine MUST replace it in the original location before resuming operations. For replacements, contact (800) 523-4777 or www.grizzly.com.

WARRANTY & RETURNS

Grizzly Industrial, Inc. warrants every product it sells for a period of **1 year** to the original purchaser from the date of purchase. This warranty does not apply to defects due directly or indirectly to misuse, abuse, negligence, accidents, repairs or alterations or lack of maintenance. This is Grizzly's sole written warranty and any and all warranties that may be implied by law, including any merchantability or fitness, for any particular purpose, are hereby limited to the duration of this written warranty. We do not warrant or represent that the merchandise complies with the provisions of any law or acts unless the manufacturer so warrants. In no event shall Grizzly's liability under this warranty exceed the purchase price paid for the product and any legal actions brought against Grizzly shall be tried in the State of Washington, County of Whatcom.

We shall in no event be liable for death, injuries to persons or property or for incidental, contingent, special, or consequential damages arising from the use of our products.

The manufacturers reserve the right to change specifications at any time because they constantly strive to achieve better quality equipment. We make every effort to ensure that our products meet high quality and durability standards and we hope you never need to use this warranty.

In the event you need to use this warranty, contact us by mail or phone and give us all the details. We will then issue you a "Return Number," which must be clearly posted on the outside as well as the inside of the carton. We will not accept any item back without this number. Proof of purchase must accompany the merchandise.

Please feel free to write or call us if you have any questions about the machine or the manual.

Thank you again for your business and continued support. We hope to serve you again soon.

To take advantage of this warranty, you must register it at **https://www.grizzly.com/forms/warranty**, or you can scan the QR code below to be automatically directed to our warranty registration page. Enter all applicable information for the product.

WARRANTY

grizzly.com