MODEL G0949G
12" X 35" VARIABLE-SPEED GUNSMITH LATHE

OWNER'S MANUAL

(For models manufactured since 01/22)

#JM22163 PRINTED IN CHINA V1.05.23

******Keep for Future Reference******

⚠ WARNING!

This manual provides critical safety instructions on the proper setup, operation, maintenance, and service of this machine/tool. Save this document, refer to it often, and use it to instruct other operators.

Failure to read, understand and follow the instructions in this manual may result in fire or serious personal injury—including amputation, electrocution, or death.

The owner of this machine/tool is solely responsible for its safe use. This responsibility includes but is not limited to proper installation in a safe environment, personnel training and usage authorization, proper inspection and maintenance, manual availability and comprehension, application of safety devices, cutting/sanding/grinding tool integrity, and the usage of personal protective equipment.

The manufacturer will not be held liable for injury or property damage from negligence, improper training, machine modifications or misuse.

⚠ WARNING!

Some dust created by power sanding, sawing, grinding, drilling, and other construction activities contains chemicals known to the State of California to cause cancer, birth defects or other reproductive harm. Some examples of these chemicals are:

- **Lead from lead-based paints.**
- **Crystalline silica from bricks, cement and other masonry products.**
- **Arsenic and chromium from chemically-treated lumber.**

Your risk from these exposures varies, depending on how often you do this type of work. To reduce your exposure to these chemicals: Work in a well ventilated area, and work with approved safety equipment, such as those dust masks that are specially designed to filter out microscopic particles.

Table of Contents

INTRODUCTION

Contact Info

We stand behind our machines! If you have questions or need help, contact us with the information below. Before contacting, make sure you get the **serial number** and **manufacture date** from the machine ID label. This will help us help you faster.

Grizzly Technical Support
1815 W. Battlefield
Springfield, MO 65807
Phone: (570) 546-9663
Email: techsupport@grizzly.com

We want your feedback on this manual. What did you like about it? Where could it be improved? Please take a few minutes to give us feedback.

Grizzly Documentation Manager
P.O. Box 2069
Bellingham, WA 98227-2069
Email: manuals@grizzly.com

Manual Accuracy

We are proud to provide a high-quality owner's manual with your new machine!

We made every effort to be exact with the instructions, specifications, drawings, and photographs in this manual. Sometimes we make mistakes, but our policy of continuous improvement also means that **sometimes the machine you receive is slightly different than shown in the manual**.

If you find this to be the case, and the difference between the manual and machine leaves you confused or unsure about something, check our website for an updated version. We post current manuals and manual updates for free on our website at **www.grizzly.com**.

Alternatively, you can call our Technical Support for help. Before calling, make sure you write down the **manufacture date** and **serial number** from the machine ID label (see below). This information is required for us to provide proper tech support, and it helps us determine if updated documentation is available for your machine.

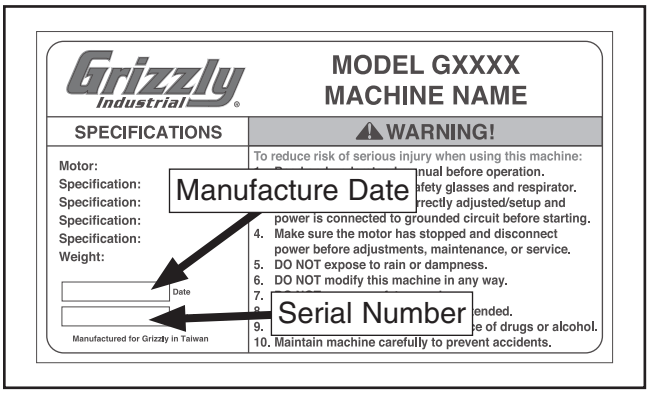

Identification

Become familiar with the names and locations of the controls and features shown below to better understand the instructions in this manual.

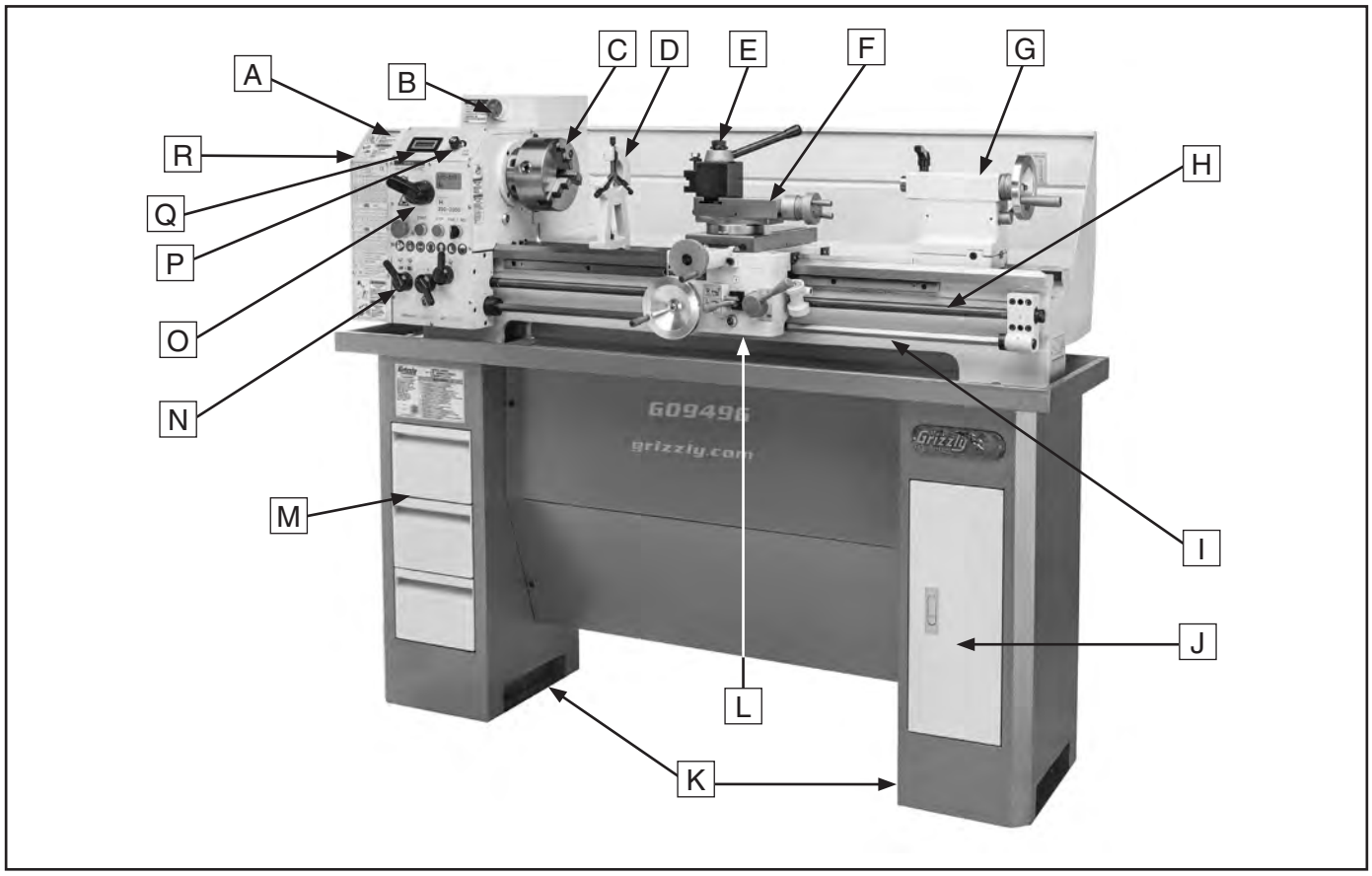

A. Headstock
B. Master Power Switch
C. 3-Jaw Chuck 6"
D. Steady Rest
E. Quick-Change Tool Post
F. Compound Rest
G. Tailstock
H. Leadscrew
I. Feed Rod
J. Storage Cabinet
K. Stand Mounting Points
L. Carriage
M. 3-Drawer Cabinet
N. Quick-Change Gearbox Levers
O. Spindle Speed Range Lever
P. Spindle Speed Dial
Q. Spindle Speed Digital Readout
R. Change Gear and Belt Safety Cover

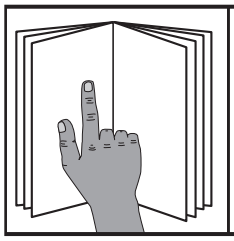

⚠WARNING

To reduce your risk of serious injury, read this entire manual BEFORE using machine.

Controls & Components

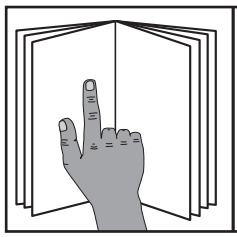

⚠WARNING

To reduce your risk of serious injury, read this entire manual BEFORE using machine.

Refer to **Figures 1-6** and the following descriptions to become familiar with the basic controls of this lathe.

Many of the controls will be explained in greater detail later in this manual.

Master Power Switch

The rotary switch shown in **Figure 1** toggles incoming power ***ON*** and ***OFF*** to the lathe controls.

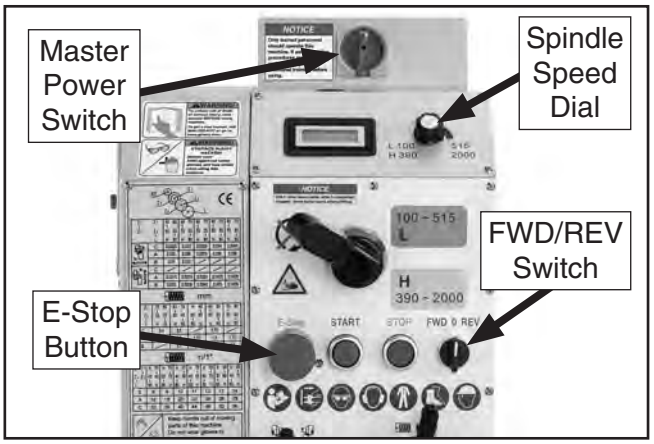

Figure 1. Master power switch location.

Headstock

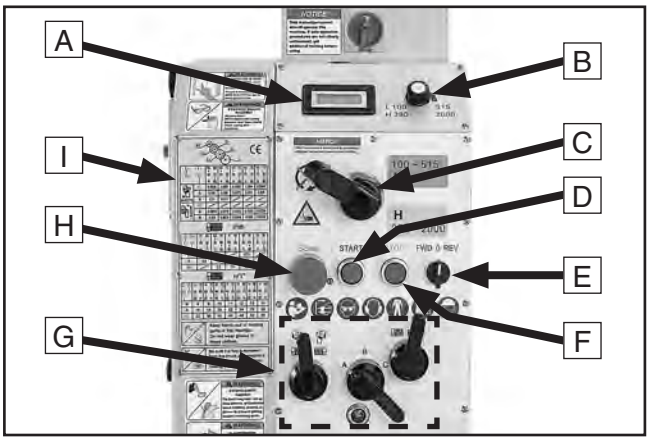

Figure 2. Headstock controls.

A. Spindle Speed Digital Readout: Shows spindle speed RPM.

B. Spindle Speed Dial: Turn clockwise to increase spindle speed. Turn counterclockwise to decrease spindle speed.

C. Spindle Speed Range Lever: Selects one of two spindle speed ranges.

D. START Button: Starts spindle rotation. Illuminates when power is ***ON***.

E. FWD/REV Switch: Once spindle has come to a complete stop, move switch to FWD position for counterclockwise rotation (forward). Move switch to REV position for clockwise rotation (reverse). Move switch to "0" position to stop spindle rotation.

F. STOP Button: Stops spindle rotation.

G. Quick-Change Gearbox Levers: Controls leadscrew and feed rod speeds for threading and feeding operations.

H. E-Stop Button: Stops all machine functions. Twist clockwise to reset.

I. Thread and Feed Charts: Display necessary configuration of gearbox dials and end gears for threading or feeding options.

Carriage

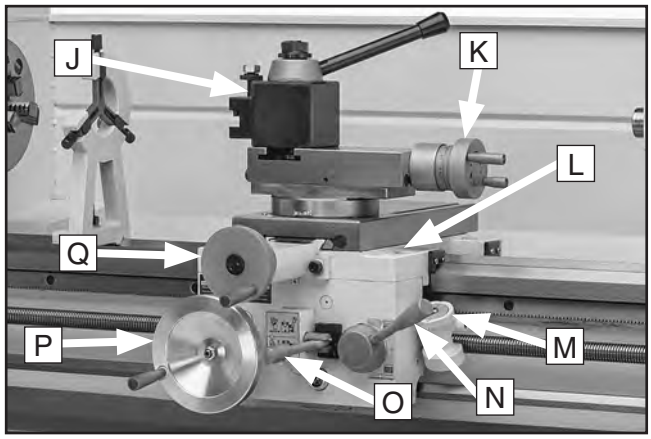

Figure 3. Carriage controls.

J. Quick-Change Tool Post: Allows operator to quickly load and unload tools/tool holders.

K. Compound Rest Handwheel: Moves tool towards or away from workpiece at preset angle of compound rest. Dial is graduated in increments of 0.001" (0.1" per full revolution).

L. Carriage Lock: Secures carriage in place for greater rigidity.

M. Thread Dial: Indicates when to engage the half nut during inch threading operations.

N. Half-Nut Lever: Engages/disengages half nut for threading operations.

O. Feed Selection Lever: Selects power feed for carriage or cross slide.

P. Carriage Handwheel: Moves carriage along bed. Dial is graduated in increments of 0.01" (1.2" per full revolution).

Q. Cross Slide Handwheel: Moves cross slide towards or away from workpiece. Dial is graduated in increments of 0.002" (0.2" per full revolution).

Tailstock

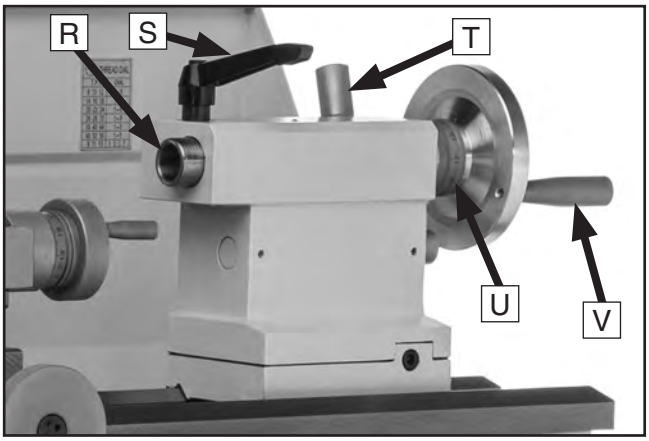

Figure 4. Tailstock controls.

R. Quill: Holds centers and tooling.

S. Quill Lock Lever: Secures quill in position.

T. Tailstock Lock Lever: Secures tailstock in position along bedway.

U. Graduated Scale: Indicates quill movement in increments of 0.001" with one full revolution equaling 0.1" of quill travel.

V. Quill Handwheel: Moves quill toward or away from spindle.

Figure 5. Additional tailstock controls.

W. Tailstock Offset Screw: Offsets tailstock left or right from spindle centerline (1 of 2).

X. Offset Scale: Indicates relative distance of tailstock offset from spindle centerline.

End Gears

Configuring the end gears (shown in **Figure 6**) controls the speed of the leadscrew for threading operations, or the feed rod for power feed operations.

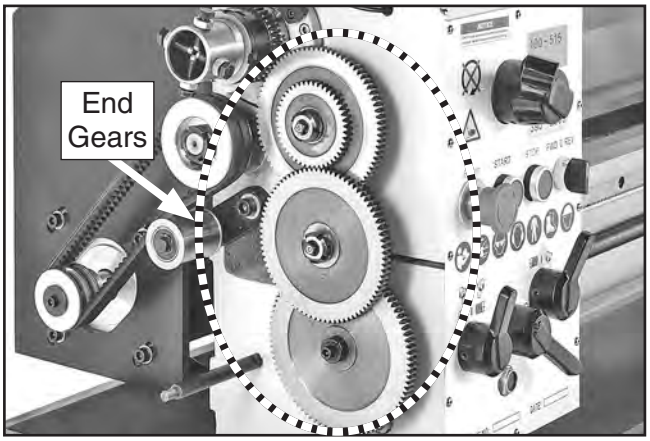

Figure 6. End gear components.

Glossary of Terms

The following is a list of common definitions, terms and phrases used throughout this manual as they relate to this lathe and metalworking in general. Become familiar with these terms for assembling, adjusting or operating this machine. Your safety is **VERY** important to us at Grizzly!

Arbor: A machine shaft that supports a cutting tool.

Backlash: Wear in a screw or gear mechanism that may result in slippage, vibration, and loss of tolerance.

Carriage: A main housing that consists of the apron and the saddle.

Cross Slide: A fixture attached to the lathe carriage that holds the compound rest and can be moved in and out.

Compound Rest: A fixture attached to the cross slide that holds the tool holder and can be moved in and out.

Cutting Speed: The distance a point on a cutter moves in one minute, expressed in meters or feet per minute.

Dial Indicator: An instrument used in setup and inspection work that shows on a dial the amount of error in size or alignment of a part.

Facing: In lathe work, cutting across the end of a workpiece, usually to machine a flat surface.

Feed: The movement of a cutting tool into a workpiece.

Fixture: A device that securely holds the workpiece in place during cutting operation as opposed to a jig which is used to hold and guide a workpiece through an operation.

Gib: A tapered wedge located along a sliding member to take up wear or to ensure a proper fit.

Headstock: The major lathe component that houses the spindle and motor drive system to turn the workpiece.

Lathe Center: A lathe accessory with a 60° point which is inserted into the headstock or tailstock of the lathe and is used to support the workpiece.

Leadscrew: Lathe—The long screw that is driven by the change gears and supplies power to the carriage.

Saddle: The upper portion of carriage that rides on the lathe ways and supports the cross feed and the follow rest.

Spindle: The revolving shaft that holds and drives the workpiece or cutting tool.

Tailstock: A moveable fixture opposite of the headstock on a lathe that has a spindle used to support one end of a workpiece and for holding tools.

Tool Post: The part of the compound rest that holds the tool holder.

Turret: Lathe—A machine fixture that holds multiple tools and can be revolved and indexed to position.

Ways: The precision machined and flat tracks on a lathe on which the carriage and tailstock slide.

MACHINE DATA SHEET

Customer Service #: (570) 546-9663 · To Order Call: (800) 523-4777 · Fax #: (800) 438-5901

MODEL G0949G 12" X 35" VARIABLE-SPEED GUNSMITH LATHE

Product Dimensions:

Weight..... 772 lbs.
Width (side-to-side) x Depth (front-to-back) x Height..... 65 x 30-1/2 x 53 in.
Footprint (Length x Width)..... 58-1/2 x 15 in.

Shipping Dimensions:

Carton #1

Type..... Wood Crate
Content..... Machine
Weight..... 717 lbs.
Length x Width x Height..... 65 x 30 x 30 in.
Must Ship Upright..... Yes

Carton #2

Type..... Wood Pallet
Content..... Stand
Weight..... 133 lbs.
Length x Width x Height..... 32 x 24 x 20 in.
Must Ship Upright..... Yes

Electrical:

Power Requirement..... 110V, Single-Phase, 60 Hz
Full-Load Current Rating..... 15A
Minimum Circuit Size..... 20A
Connection Type..... Cord & Plug
Power Cord Included..... Yes
Power Cord Length..... 60 in.
Power Cord Gauge..... 14 AWG
Plug Included..... Yes
Included Plug Type..... 5-15
Switch Type..... START/STOP Buttons

Motors:

Main

Horsepower..... 1.5 HP
Phase..... Single-Phase
Amps..... 15A
Speed..... 3400 RPM
Type..... DC Brushless
Power Transfer ..... Belt
Bearings..... Shielded & Permanently Lubricated

Main Specifications:

Operation Info

Swing Over Bed	12-5/8 in.
Distance Between Centers	34-5/8 in.
Swing Over Cross Slide	7-3/4 in.
Swing Over Saddle	10-1/2 in.
Maximum Tool Bit Size	5/8 in.
Compound Travel	3-3/8 in.
Carriage Travel	33-7/16 in.
Cross Slide Travel	6-1/2 in.

Headstock Info

Spindle Bore	1.5 in.
Spindle Taper	MT#5
Spindle Threads	M48 x 1.5mm
Number of Spindle Speeds	2
Spindle Speeds	100 - 515, 390 - 2000 RPM
Spindle Type	D1-4 Camlock
Spindle Bearings	Tapered Roller
Spindle Length	14-3/4 in.
Spindle Length with 3-Jaw Chuck	18-3/8 in.
Spindle Length with 4-Jaw Chuck	19-13/16 in.
Spindle Length with Faceplate	15-13/16 in.

Tailstock Info

Tailstock Quill Travel	3-1/8 in.
Tailstock Taper	MT#3
Tailstock Barrel Diameter	1.261 in.

Threading Info

Number of Longitudinal Feeds	12
Range of Longitudinal Feeds	0.0025 - 0.012 in./rev.
Number of Cross Feeds	10
Range of Cross Feeds	0.0015 - 0.0056 in./rev.
Number of Inch Threads	21
Range of Inch Threads	8 - 56 TPI
Number of Metric Threads	12
Range of Metric Threads	0.4 - 3.5mm

Dimensions

Bed Width	7 in.
Carriage Leadscrew Diameter	13/16 in.
Leadscrew TPI	8
Carriage Leadscrew Length	47-7/16 in.
Steady Rest Capacity	2 in.
Follow Rest Capacity	2 in.
Faceplate Size	9-3/8 in.
Feed Rod Diameter	11/16 in.
Floor to Center Height	46-1/2 in.

Other

Carriage Handwheel Graduations	0.01 in.
Carriage Handwheel Revolution	1.2 in.
Cross Slide Handwheel Graduations	0.002 in.
Cross Slide Handwheel Revolution	0.2 in.
Compound Handwheel Graduations	0.001 in.
Compound Handwheel Revolution	0.1 in.
Tailstock Handwheel Graduations	0.001 in.
Tailstock Handwheel Revolution	0.1 in.

Construction

Base..... Steel
Headstock..... Cast Iron
End Gears..... Flame-Hardened Steel
Bed..... Induction-Hardened Cast Iron
Body..... Cast Iron
Stand..... Steel
Paint Type/Finish..... Epoxy

Fluid Capacities

Headstock Capacity..... 27 oz.
Headstock Fluid Type..... ISO 32 (eg. Grizzly T23963, Mobil DTE Light)
Gearbox Capacity..... 13.5 oz.
Gearbox Fluid Type..... ISO 68 (eg. Grizzly T23962, Mobil Vactra 2)
Apron Capacity..... 6.75 oz.
Apron Fluid Type..... ISO 68 (eg. Grizzly T23962, Mobil Vactra 2)

Other Specifications:

Country of Origin ..... China
Warranty ..... 1 Year
Approximate Assembly & Setup Time ..... 1 Hour
Serial Number Location ..... Machine ID Label
ISO 9001 Factory ..... Yes

Features:

Digital Spindle Speed Readout
Outboard Spindle Support Spider with 4 Brass-Tipped Bolts
D1-4 Camlock Spindle
Full-Length Splash Guard
200-Series Quick-Change Tool Post
Steady and Follow Rests with Brass Supports
Stand with 3 Storage Drawers and 1 Cabinet
Variable-Speed Control Through 2 Speed Ranges

Accessories Included:

6" 3-Jaw Universal Chuck with 2 Sets of Jaws
6" 4-Jaw Independent Chuck with Reversible Jaws
9-3/8" Faceplate
200-Series Quick-Change Tool Post with 2 Holders
Steady and Follow Rests with Brass Supports
MT#5 - MT#3 Adapter Sleeve
(2) MT#3 Dead Centers
Set of 10 Change Gears
Toolbox with Service Tools

SECTION 1: SAFETY

For Your Own Safety, Read Instruction Manual Before Operating This Machine

The purpose of safety symbols is to attract your attention to possible hazardous conditions. This manual uses a series of symbols and signal words intended to convey the level of importance of the safety messages. The progression of symbols is described below. Remember that safety messages by themselves do not eliminate danger and are not a substitute for proper accident prevention measures. Always use common sense and good judgment.

DANGER	**Indicates an imminently hazardous situation which, if not avoided, WILL result in death or serious injury.**
WARNING	**Indicates a potentially hazardous situation which, if not avoided, COULD result in death or serious injury.**
CAUTION	**Indicates a potentially hazardous situation which, if not avoided, MAY result in minor or moderate injury. It may also be used to alert against unsafe practices.**
NOTICE	**Alerts the user to useful information about proper operation of the machine to avoid machine damage.**

Safety Instructions for Machinery

WARNING

OWNER'S MANUAL. Read and understand this owner's manual BEFORE using machine.

TRAINED OPERATORS ONLY. Untrained operators have a higher risk of being hurt or killed. Only allow trained/supervised people to use this machine. When machine is not being used, disconnect power, remove switch keys, or lock-out machine to prevent unauthorized use—especially around children. Make your workshop kid proof!

DANGEROUS ENVIRONMENTS. Do not use machinery in areas that are wet, cluttered, or have poor lighting. Operating machinery in these areas greatly increases the risk of accidents and injury.

MENTAL ALERTNESS REQUIRED. Full mental alertness is required for safe operation of machinery. Never operate under the influence of drugs or alcohol, when tired, or when distracted.

ELECTRICAL EQUIPMENT INJURY RISKS. You can be shocked, burned, or killed by touching live electrical components or improperly grounded machinery. To reduce this risk, only allow qualified service personnel to do electrical installation or repair work, and always disconnect power before accessing or exposing electrical equipment.

DISCONNECT POWER FIRST. Always disconnect machine from power supply BEFORE making adjustments, changing tooling, or servicing machine. This prevents an injury risk from unintended startup or contact with live electrical components.

EYE PROTECTION. Always wear ANSI-approved safety glasses or a face shield when operating or observing machinery to reduce the risk of eye injury or blindness from flying particles. Everyday eyeglasses are NOT approved safety glasses.

⚠WARNING

WEARING PROPER APPAREL. Do not wear clothing, apparel or jewelry that can become entangled in moving parts. Always tie back or cover long hair. Wear non-slip footwear to reduce risk of slipping and losing control or accidentally contacting cutting tool or moving parts.

HAZARDOUS DUST. Dust created by machinery operations may cause cancer, birth defects, or long-term respiratory damage. Be aware of dust hazards associated with each workpiece material. Always wear a NIOSH-approved respirator to reduce your risk.

HEARING PROTECTION. Always wear hearing protection when operating or observing loud machinery. Extended exposure to this noise without hearing protection can cause permanent hearing loss.

REMOVE ADJUSTING TOOLS. Tools left on machinery can become dangerous projectiles upon startup. Never leave chuck keys, wrenches, or any other tools on machine. Always verify removal before starting!

USE CORRECT TOOL FOR THE JOB. Only use this tool for its intended purpose—do not force it or an attachment to do a job for which it was not designed. Never make unapproved modifications—modifying tool or using it differently than intended may result in malfunction or mechanical failure that can lead to personal injury or death!

AWKWARD POSITIONS. Keep proper footing and balance at all times when operating machine. Do not overreach! Avoid awkward hand positions that make workpiece control difficult or increase the risk of accidental injury.

CHILDREN & BYSTANDERS. Keep children and bystanders at a safe distance from the work area. Stop using machine if they become a distraction.

GUARDS & COVERS. Guards and covers reduce accidental contact with moving parts or flying debris. Make sure they are properly installed, undamaged, and working correctly BEFORE operating machine.

FORCING MACHINERY. Do not force machine. It will do the job safer and better at the rate for which it was designed.

NEVER STAND ON MACHINE. Serious injury may occur if machine is tipped or if the cutting tool is unintentionally contacted.

STABLE MACHINE. Unexpected movement during operation greatly increases risk of injury or loss of control. Before starting, verify machine is stable and mobile base (if used) is locked.

USE RECOMMENDED ACCESSORIES. Consult this owner's manual or the manufacturer for recommended accessories. Using improper accessories will increase the risk of serious injury.

UNATTENDED OPERATION. To reduce the risk of accidental injury, turn machine ***OFF*** and ensure all moving parts completely stop before walking away. Never leave machine running while unattended.

MAINTAIN WITH CARE. Follow all maintenance instructions and lubrication schedules to keep machine in good working condition. A machine that is improperly maintained could malfunction, leading to serious personal injury or death.

DAMAGED PARTS. Regularly inspect machine for damaged, loose, or mis-adjusted parts—or any condition that could affect safe operation. Immediately repair/replace BEFORE operating machine. For your own safety, DO NOT operate machine with damaged parts!

MAINTAIN POWER CORDS. When disconnecting cord-connected machines from power, grab and pull the plug—NOT the cord. Pulling the cord may damage the wires inside. Do not handle cord/plug with wet hands. Avoid cord damage by keeping it away from heated surfaces, high traffic areas, harsh chemicals, and wet/damp locations.

EXPERIENCING DIFFICULTIES. If at any time you experience difficulties performing the intended operation, stop using the machine! Contact our Technical Support at (570) 546-9663.

Additional Safety for Metal Lathes

⚠WARNING

Serious injury or death can occur from getting entangled in, crushed between, or struck by rotating parts on a lathe! Unsecured tools or workpieces that fly loose from rotating objects can also strike nearby operators with deadly force. To minimize the risk of getting hurt or killed, anyone operating this machine MUST completely heed the hazards and warnings below.

CLOTHING, JEWELRY & LONG HAIR. Tie back long hair, remove jewelry, and do not wear loose clothing or gloves. These can easily get caught on rotating parts and pull you into lathe.

ROTATING PARTS. Always keep hands and body at a safe distance from rotating parts—especially those with projecting surfaces. Never hold anything against rotating workpiece, such as emery cloth, that can pull you into lathe.

GUARDING. Guards and covers protect against entanglement or flying objects. Always ensure they are properly installed while machine is running.

ADJUSTMENT TOOLS. Remove all chuck keys, wrenches, and adjustment tools before turning lathe ***ON***. A tool left on the lathe can become a deadly projectile when spindle is started.

SAFE CLEARANCES. Before starting spindle, verify workpiece has adequate clearance by hand-rotating it through its entire range of motion.

NEW SETUPS. Test each new setup by starting spindle rotation at the lowest speed and standing to the side of the lathe until workpiece reaches full speed and you can verify safe rotation.

SPINDLE SPEEDS. Using spindle speeds that are too fast for the workpiece or clamping equipment can cause rotating parts to come loose and strike nearby people with deadly force. Always use slow spindle speeds with large or non-concentric workpieces. Never exceed rated RPM of the chuck.

LONG STOCK SAFETY. Long stock can whip violently if not properly supported. Always support any stock that extends from the chuck/headstock more than three times its own diameter.

CLEARING CHIPS. Metal chips can be razor sharp. Avoid clearing them by hand or with a rag. Use a brush or vacuum instead.

SECURE WORKPIECE. An improperly secured workpiece can fly off spindle with deadly force. Make sure workpiece is properly secured before starting the lathe.

CHUCKS. Chucks can be heavy and difficult to hold. During installation and removal, protect your hands and precision bed ways by using a chuck cradle or piece of plywood over the bed ways. Use lifting equipment, as necessary, for large chucks.

STOPPING SPINDLE. Always allow spindle to completely stop on its own, or use a brake, if provided. Never put hands or another object on a spinning workpiece to make it stop faster.

CRASHING. A serious explosion of metal parts can occur if cutting tool or other lathe component hits rotating chuck or a projecting part of workpiece. Resulting metal fragments can strike nearby people and lathe will be seriously damaged. To reduce risk of crashing, ALWAYS release automatic feeds after use, NEVER leave lathe unattended, and CHECK all clearances before starting lathe.

COOLANT SAFETY. Coolant can become very toxic through prolonged use and aging. To minimize toxicity, change coolant regularly. When using, position nozzle properly to avoid splashing operator or causing a slipping hazard on floor.

TOOL SELECTION. Cutting with incorrect or dull tooling increases risk of injury from broken or dislodged components, or as a result of extra force required for operation. Always use sharp tooling that is right for the job.

SANDING/POLISHING. To reduce risk of entanglement, never wrap emery cloth around rotating workpiece. Instead, use emery cloth with the aid of a tool or backing board.

MEASURING WORKPIECE. To reduce risk of entanglement, never measure rotating workpieces.

Additional Chuck Safety

⚠WARNING

ENTANGLEMENT. Entanglement with a rotating chuck can lead to death, amputation, broken bones, or other serious injury. Never attempt to slow or stop the lathe chuck by hand, and always roll up long sleeves, tie back long hair, and remove any jewelry or loose apparel BEFORE operating.

CHUCK SPEED RATING. Excessive spindle speeds greatly increase the risk of the workpiece or chuck being thrown from the machine with deadly force. Never use spindle speeds faster than the chuck RPM rating or the safe limits of your workpiece.

USING CORRECT EQUIPMENT. Many workpieces can only be safely turned in a lathe if additional support equipment, such as a tailstock or steady/follow rest, is used. If the operation is too hazardous to be completed with the lathe or existing equipment, the operator must have enough experience to know when to use a different machine or find a safer way.

TRAINED OPERATORS ONLY. Using a chuck incorrectly can result in workpieces coming loose at high speeds and striking the operator or bystanders with deadly force. To reduce the risk of this hazard, read and understand this document and seek additional training from an experienced chuck user before using a chuck.

CHUCK CAPACITY. Avoid exceeding the capacity of the chuck by clamping an oversized workpiece. If the workpiece is too large to safely clamp with the chuck, use a faceplate or a larger chuck if possible. Otherwise, the workpiece could be thrown from the lathe during operation, resulting in serious impact injury or death.

CLAMPING FORCE. Inadequate clamping force can lead to the workpiece being thrown from the chuck and striking the operator or bystanders. Maximum clamping force is achieved when the chuck is properly maintained and lubricated, all jaws are fully engaged with the workpiece, and the maximum chuck clamping diameter is not exceeded.

PROPER MAINTENANCE. All chucks must be properly maintained and lubricated to achieve maximum clamping force and withstand the rigors of centrifugal force. To reduce the risk of a thrown workpiece, follow all maintenance intervals and instructions in this document.

DISCONNECT POWER. Serious entanglement or impact injuries could occur if the lathe is started while you are adjusting, servicing, or installing the chuck. Always disconnect the lathe from power before performing these procedures.

⚠WARNING

Like all machines there is danger associated with Model G0949G. Accidents are frequently caused by lack of familiarity or failure to pay attention. Use this machine with respect and caution to lessen the possibility of operator injury. If normal safety precautions are overlooked or ignored, serious personal injury may occur.

⚠CAUTION

No list of safety guidelines can be complete. Every shop environment is different. Always consider safety first, as it applies to your individual working conditions. Use this and other machinery with caution and respect. Failure to do so could result in serious personal injury, damage to equipment, or poor work results.

SECTION 2: POWER SUPPLY

Availability

Before installing the machine, consider the availability and proximity of the required power supply circuit. If an existing circuit does not meet the requirements for this machine, a new circuit must be installed. To minimize the risk of electrocution, fire, or equipment damage, installation work and electrical wiring must be done by an electrician or qualified service personnel in accordance with all applicable codes and standards.

⚠WARNING

Electrocution, fire, shock, or equipment damage may occur if machine is not properly grounded and connected to power supply.

Full-Load Current Rating

The full-load current rating is the amperage a machine draws at 100% of the rated output power. On machines with multiple motors, this is the amperage drawn by the largest motor or sum of all motors and electrical devices that might operate at one time during normal operations.

Full-Load Current Rating at 110V..... 15 Amps

The full-load current is not the maximum amount of amps that the machine will draw. If the machine is overloaded, it will draw additional amps beyond the full-load rating.

If the machine is overloaded for a sufficient length of time, damage, overheating, or fire may result—especially if connected to an undersized circuit. To reduce the risk of these hazards, avoid overloading the machine during operation and make sure it is connected to a power supply circuit that meets the specified circuit requirements.

⚠WARNING

Serious injury could occur if you connect machine to power before completing setup process. DO NOT connect to power until instructed later in this manual.

110V Circuit Requirements

This machine is prewired to operate on a power supply circuit that has a verified ground and meets the following requirements:

Nominal Voltage 110V, 115V, 120V
Cycle .....60 Hz
Phase ..... Single-Phase
Power Supply Circuit ..... 20 Amps
Plug Receptacle..... NEMA 5-15

A power supply circuit includes all electrical equipment between the breaker box or fuse panel in the building and the machine. The power supply circuit used for this machine must be sized to safely handle the full-load current drawn from the machine for an extended period of time. (If this machine is connected to a circuit protected by fuses, use a time delay fuse marked D.)

⚠CAUTION

For your own safety and protection of property, consult an electrician if you are unsure about wiring practices or electrical codes in your area.

Note: *Circuit requirements in this manual apply to a dedicated circuit—where only one machine will be running on the circuit at a time. If machine will be connected to a shared circuit where multiple machines may be running at the same time, consult an electrician or qualified service personnel to ensure circuit is properly sized for safe operation.*

Grounding & Plug Requirements

This machine MUST be grounded. In the event of certain malfunctions or breakdowns, grounding reduces the risk of electric shock by providing a path of least resistance for electric current.

This machine is equipped with a power cord that has an equipment-grounding wire and a grounding plug. Only insert plug into a matching receptacle (outlet) that is properly installed and grounded in accordance with all local codes and ordinances. DO NOT modify the provided plug!

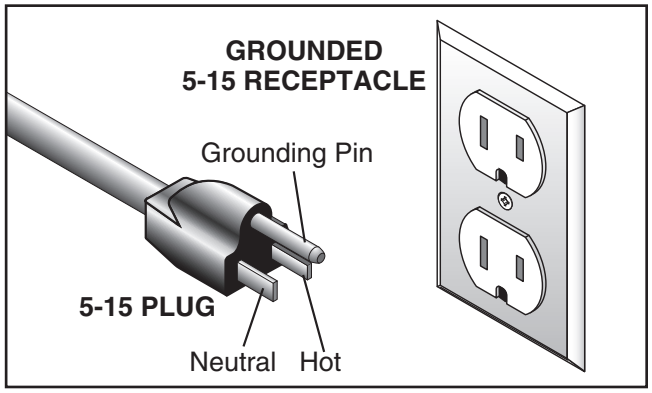

Figure 7. Typical 5-15 plug and receptacle.

⚠CAUTION

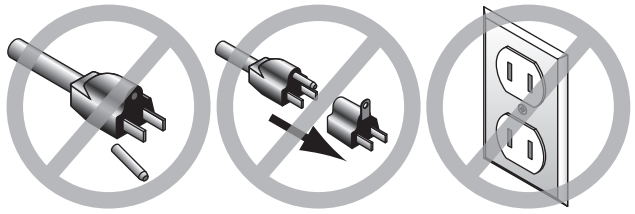

SHOCK HAZARD!

Two-prong outlets do not meet the grounding requirements for this machine. Do not modify or use an adapter on the plug provided—if it will not fit the outlet, have a qualified electrician install the proper outlet with a verified ground.

Improper connection of the equipment-grounding wire can result in a risk of electric shock. The wire with green insulation (with or without yellow stripes) is the equipment-grounding wire. If repair or replacement of the power cord or plug is necessary, do not connect the equipment-grounding wire to a live (current carrying) terminal.

Check with a qualified electrician or service personnel if you do not understand these grounding requirements, or if you are in doubt about whether the tool is properly grounded. If you ever notice that a cord or plug is damaged or worn, disconnect it from power, and immediately replace it with a new one.

Extension Cords

We do not recommend using an extension cord with this machine. If you must use an extension cord, only use it if absolutely necessary and only on a temporary basis.

Extension cords cause voltage drop, which can damage electrical components and shorten motor life. Voltage drop increases as the extension cord size gets longer and the gauge size gets smaller (higher gauge numbers indicate smaller sizes).

Any extension cord used with this machine must be in good condition and contain a ground wire and matching plug/receptacle. Additionally, it must meet the following size requirements:

Minimum Gauge Size .....12 AWG
Maximum Length (Shorter is Better).....50 ft.

SECTION 3: SETUP

Preparation

The list below outlines the basic process of preparing your machine for operation. Specific steps are covered later in this section.

The typical preparation process is as follows:

1. Unpack the lathe and inventory the contents of the box/crate.
2. Clean the lathe and its components.
3. Identify an acceptable location for the lathe and move it to that location.
4. Level the lathe and bolt it to the floor.
5. Assemble the loose components and make any necessary adjustments or inspections to ensure the lathe is ready for operation.
6. Check lathe for proper lubrication.
7. Connect the lathe to the power source.
8. Test run lathe to ensure it functions properly.
9. Perform the spindle break-in procedure to prepare the lathe for operation.

Needed for Setup

The following are needed to complete the setup process, but are not included with your machine.

- **For Lifting and Moving:**
  —A forklift or other power lifting device rated for at least 1000 lbs.
  —Two lifting straps rated for at least 1000 lbs. each
  —Another person

- **For Power Connection:**
  —A power source that meets the minimum circuit requirements for this machine (review **Power Supply** on for details)

- **For Assembly:**
  —Shop rags
  —Cleaner/degreaser (**Page 20**)
  —Quality metal protectant lubricant
  —Safety glasses for each person
  —Floor mounting hardware (**Page 24**)
  —Brass hammer
  —Silicon caulk (as needed)
  —Caulking gun

Unpacking

This machine was carefully packaged for safe transport. When unpacking, separate all enclosed items from packaging materials and inspect them for shipping damage. ***If items are damaged, please call us immediately at (570) 546-9663.***

IMPORTANT: Save all packaging materials until you are completely satisfied with the machine and have resolved any issues between Grizzly or the shipping agent. *You MUST have the original packaging to file a freight claim. It is also extremely helpful if you need to return your machine later.*

Inventory

The following is a list of items shipped with your machine. Before beginning setup, lay these items out and inventory them.

If any non-proprietary parts are missing (e.g. a nut or a washer), we will gladly replace them; or for the sake of expediency, replacements can be obtained at your local hardware store.

Mounted Components (Figure 8) Qty

A. 3-Jaw Universal Chuck 6" 1
B. Steady Rest 1
C. Follow Rest 1
D. Quick Change Tool Post w/Holder 1
E. Backsplash 1
F. Tailstock 1
G. End Gears (Installed), 20T, 45T, 80T (2), 90T (not shown) ..... 1 Ea.

Loose Components (Figure 9) Qty

H. Toolbox 1
I. Faceplate 9⅜".. 1
J. Handwheel Handles 2
K. 4-Jaw Independent Chuck 6" 1
L. 4-Jaw Chuck Wrench 1

Toolbox Components (Figure 10) Qty

M. Oil Bottle 1
N. Chuck Key 1
O. End Gears 25T, 30T, 40T, 50T, 55T, 60T, 63T, 65T, 70T, 75T ..... 1 Ea.
P. Tapered Spindle Sleeve MT#5 x MT#3 1
Q. 3-Jaw Chuck Outside Jaws 3
R. Hex Wrenches 2.5, 3, 4, 5, 6, 8mm ..... 1 Ea.
S. Tool Holder (One Installed) 1
T. Cap Screws M6-1 x 14 (6 Installed) 6
U. Dead Centers MT#3 HSS Tip 2
V. Camlock Studs (6 Installed) 6
W. Phillips Head Screwdriver #2 1
X. Open-End Wrenches 8/10, 12/14, 17/19mm ..... 1 Ea.
Y. Flat Head Screwdriver ¼" 1
Z. Spider Bolts w/Nuts M8-1 x 1.25 4

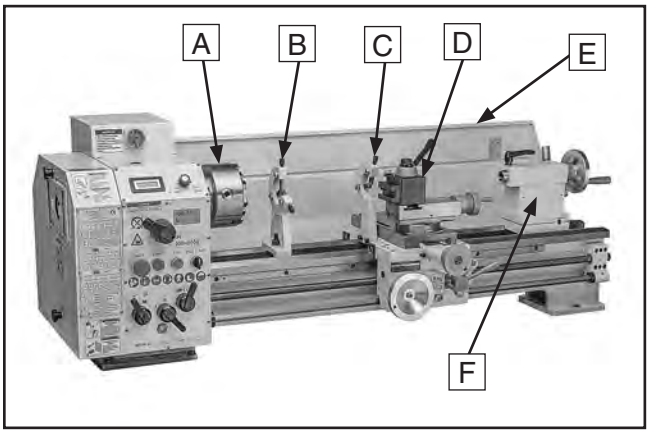

Figure 8. Mounted inventory components.

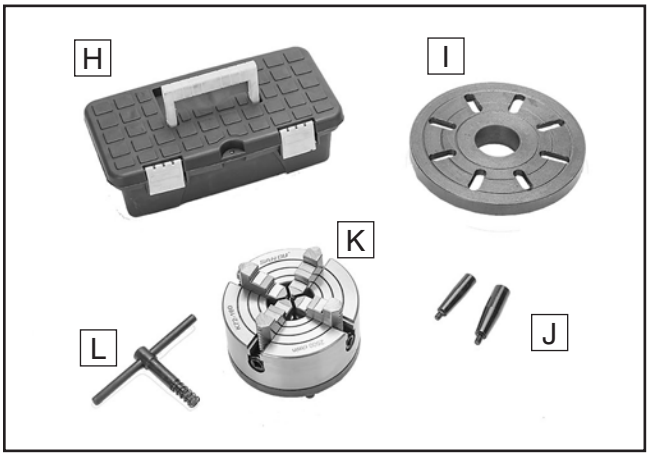

Figure 9. Loose inventory components.

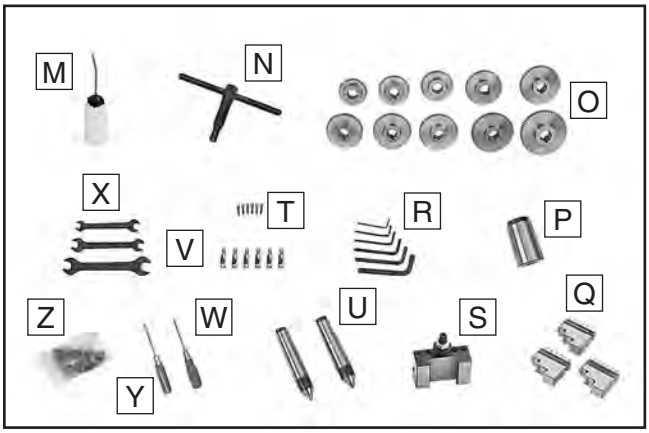

Figure 10. Toolbox inventory components.

Cabinet Components (Figure 11)	Qty
AA. Left Cabinet	1
AB. Front Panels	2
AC. Right Cabinet	1
AD. Panel Brackets	2
AE. Chip Pan	1
AF. Cabinet Fasteners (not shown)	
—Hex Bolts M10-1.5 x 40	6
—Flat Washers 10mm	12
—Hex Nuts M10-1.5	6
—Cap Screws M6-1 x 14	11
—Lock Washers 6mm	8
—Flat Washers 6mm	18
—Hex Nuts M6-1	7

NOTICE

If you cannot find an item on this list, carefully check around/inside the machine and packaging materials. Often, these items get lost in packaging materials while unpacking or they are pre-installed at the factory.

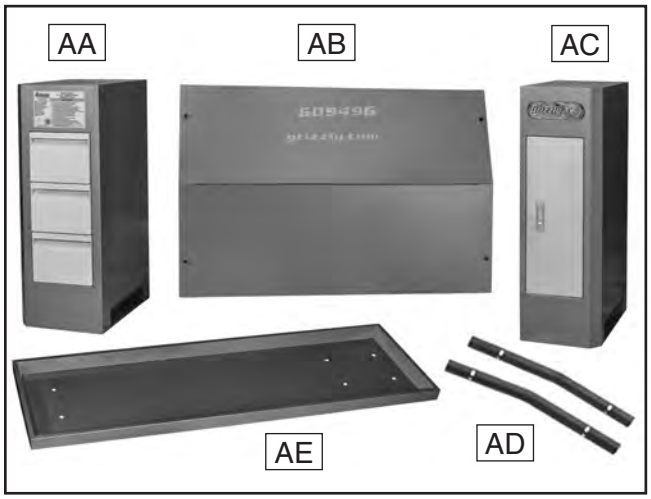

Figure 11. Cabinet inventory components.

Cleanup

The unpainted surfaces of your machine are coated with a heavy-duty rust preventative that prevents corrosion during shipment and storage. This rust preventative works extremely well, but it will take a little time to clean.

Be patient and do a thorough job cleaning your machine. The time you spend doing this now will give you a better appreciation for the proper care of your machine's unpainted surfaces.

There are many ways to remove this rust preventative, but the following steps work well in a wide variety of situations. Always follow the manufacturer's instructions with any cleaning product you use and make sure you work in a well-ventilated area to minimize exposure to toxic fumes.

Before cleaning, gather the following:
- Disposable rags
- Cleaner/degreaser (WD•40 works well)
- Safety glasses & disposable gloves
- Plastic paint scraper (optional)

Basic steps for removing rust preventative:

1. Put on safety glasses.

2. Coat the rust preventative with a liberal amount of cleaner/degreaser, then let it soak for 5–10 minutes.

3. Wipe off the surfaces. If your cleaner/degreaser is effective, the rust preventative will wipe off easily. If you have a plastic paint scraper, scrape off as much as you can first, then wipe off the rest with the rag.

4. Repeat **Steps 2–3** as necessary until clean, then coat all unpainted surfaces with a quality metal protectant to prevent rust.

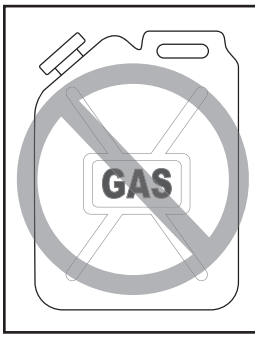

WARNING

Gasoline and petroleum products have low flash points and can explode or cause fire if used to clean machinery. Avoid using these products to clean machinery.

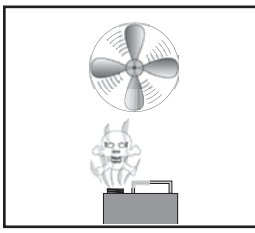

CAUTION

Many cleaning solvents are toxic if inhaled. Only work in a well-ventilated area.

NOTICE

Avoid harsh solvents like acetone or brake parts cleaner that may damage painted surfaces. Always test on a small, inconspicuous location first.

T23692—Orange Power Degreaser
A great product for removing the waxy shipping grease from the ***non-painted*** parts of the machine during clean up.

Order online at
www.grizzly.com
OR
Call 1-800-523-4777

Figure 12. T23692 Orange Power Degreaser.

Site Considerations

Weight Load

Refer to the **Machine Data Sheet** for the weight of your machine. Make sure that the surface upon which the machine is placed will bear the weight of the machine, additional equipment that may be installed on the machine, and the heaviest workpiece that will be used. Additionally, consider the weight of the operator and any dynamic loading that may occur when operating the machine.

Space Allocation

Consider the largest size of workpiece that will be processed through this machine and provide enough space around the machine for adequate operator material handling or the installation of auxiliary equipment. With permanent installations, leave enough space around the machine to open or remove doors/covers as required by the maintenance and service described in this manual. **See below for required space allocation.**

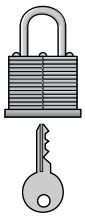

⚠CAUTION

Children or untrained people may be seriously injured by this machine. Only install in an access restricted location.

Physical Environment

The physical environment where the machine is operated is important for safe operation and longevity of machine components. For best results, operate this machine in a dry environment that is free from excessive moisture, hazardous chemicals, airborne abrasives, or extreme conditions. Extreme conditions for this type of machinery are generally those where the ambient temperature range exceeds 41°–104°F; the relative humidity range exceeds 20%–95% (non-condensing); or the environment is subject to vibration, shocks, or bumps.

Electrical Installation

Place this machine near an existing power source. Make sure all power cords are protected from traffic, material handling, moisture, chemicals, or other hazards. Make sure to leave enough space around machine to disconnect power supply or apply a lockout/tagout device, if required.

Lighting

Lighting around the machine must be adequate enough that operations can be performed safely. Shadows, glare, or strobe effects that may distract or impede the operator must be eliminated.

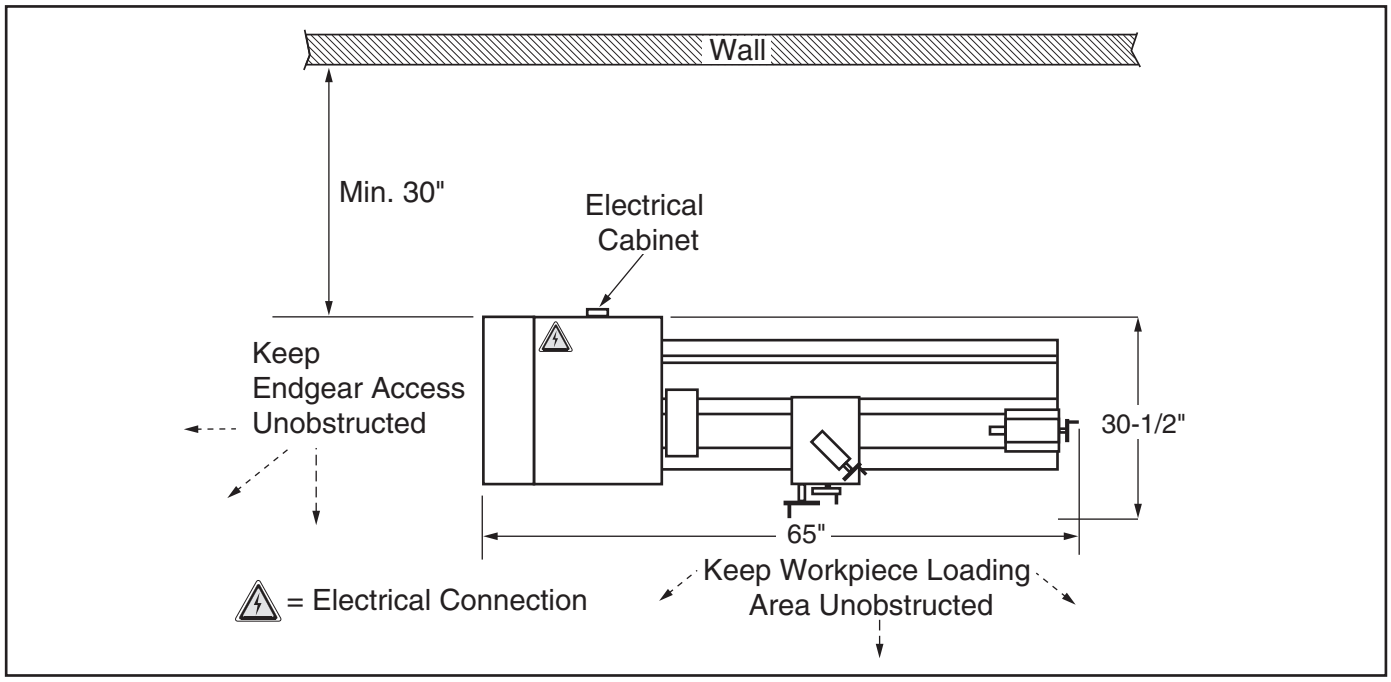

Figure 13. Minimum working clearances.

Assembly

The machine must be fully assembled before it can be operated. Before beginning the assembly process, refer to **Needed for Setup** and gather all listed items. To ensure the assembly process goes smoothly, first clean any parts that are covered or coated in heavy-duty rust preventative (if applicable).

To assemble lathe:

1. Position left and right cabinets approximately 36½" apart in prepared location.

2. Secure panel brackets to cabinets with (4) M6-1 x 12 cap screws, 6mm lock washers, and 6mm flat washers (see **Figure 14**).

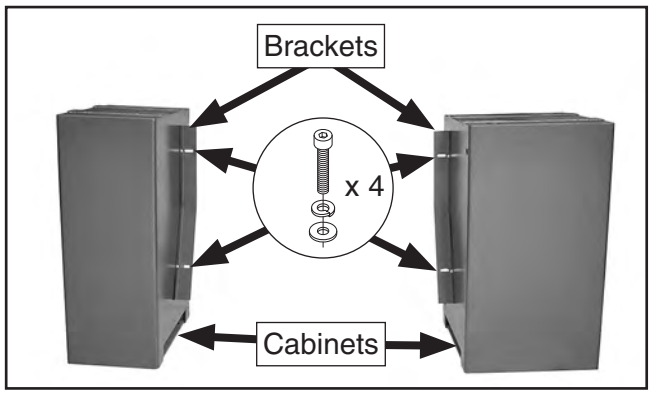

Figure 14. Panel brackets installed (rear view).

3. Assemble and install front panels onto panel brackets with (7) M6-1 x 14 cap screws, (14) 6mm flat washers, (7) 6mm lock washers, and (7) M6-1 hex nuts (see **Figure 15**).

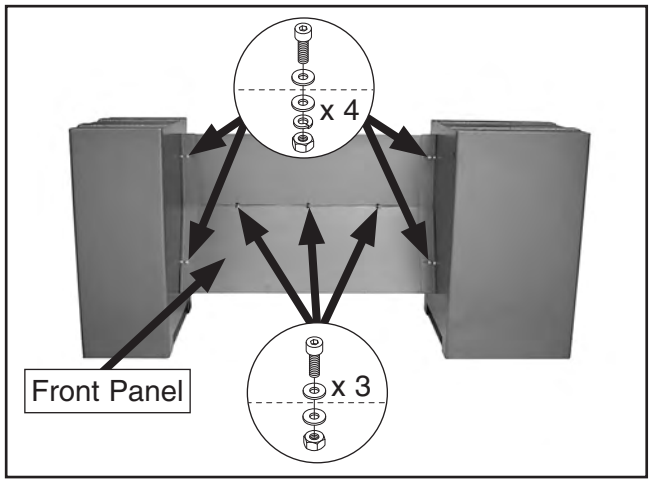

Figure 15. Front panels installed.

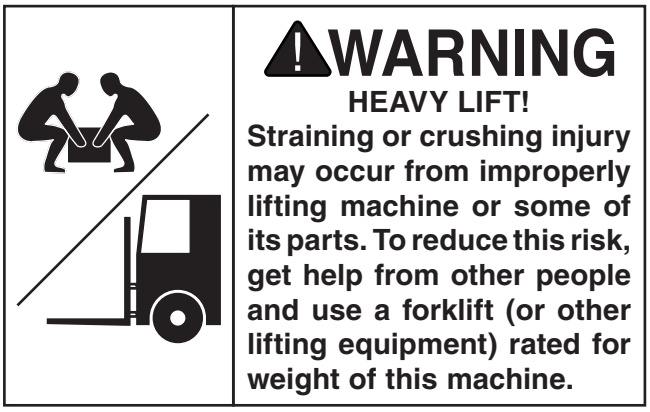

WARNING

HEAVY LIFT!

Straining or crushing injury may occur from improperly lifting machine or some of its parts. To reduce this risk, get help from other people and use a forklift (or other lifting equipment) rated for weight of this machine.

IMPORTANT: During the following steps, DO NOT attempt to lift or move this lathe without using the proper lifting equipment (such as forklift or crane) and the necessary assistance from other people. Each piece of lifting equipment must be rated for at least 1000 lbs. to support dynamic loads that may be applied while lifting.

4. Using a forklift, move crate to machine work site location.

5. Remove crate top and sides, components inside crate, and blocks around machine base.

6. Unbolt lathe from shipping pallet.

7. Thread handles into carriage and cross slide handwheels, as shown in **Figure 16**.

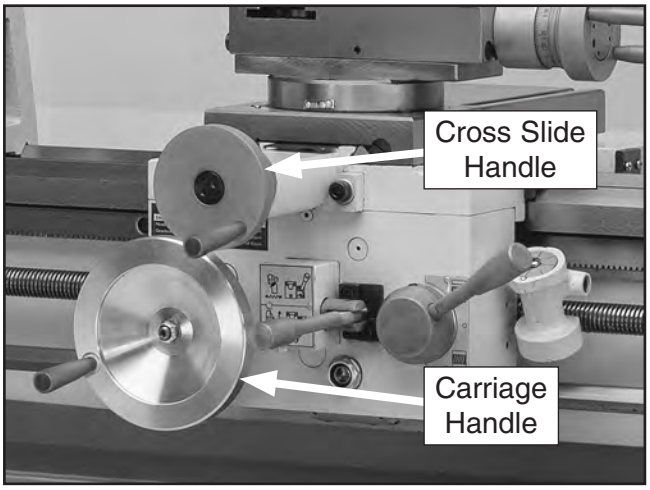

Figure 16. Handwheels installed.

8. To balance load for lifting, move tailstock and carriage to right end of bedway, then lock them in place.

   Note: *Before attempting to move carriage, make sure carriage lock is loose, half nut is disengaged, and feed selection lever is disengaged. Refer to* ***Page 5*** *to identify these controls.*

9. Wrap two lifting straps (see **Figure 17**) around bedway pedestals and route behind feed rod and leadscrew. Then attach them to safety hook or forks). This will keep lifting straps away from critical components and prevent damage to them during lifting.

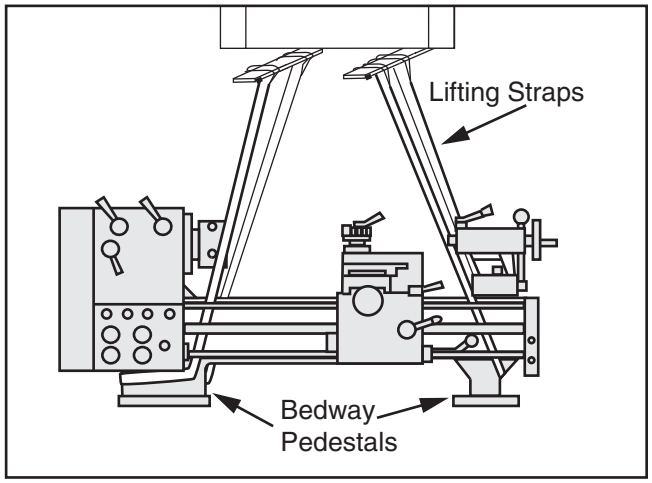

Figure 17. Example of lathe set up for lifting.

10. Position chip pan on top of cabinet stands and align six mounting holes with those on cabinet stands.

11. Slowly raise lathe from pallet and have another person hold lathe with a lifting strap to prevent it from swinging.

12. Apply a ¼" bead of silicone around bottom edge of bedway pedestals.

    Note: *When lathe is placed on chip pan, silicone will form a protective seal to help prevent fluid leaking into cabinets.*

13. Place lathe on stand while aligning mounting holes in lathe bed with holes in chip pan.

14. Remove change gear cover to gain better access to headstock base pedestal (see **Figure 18**).

15. Attach lathe to stand and chip pan (see **Figure 18**) with (6) M10-1.5 x 40 hex bolts, (12) 10mm flat washers, and (6) M10-1.5 hex nuts. Do not fully tighten fasteners until lathe has been leveled.

    Note: *Remove drawers for easier access to left side mounting hardware.*

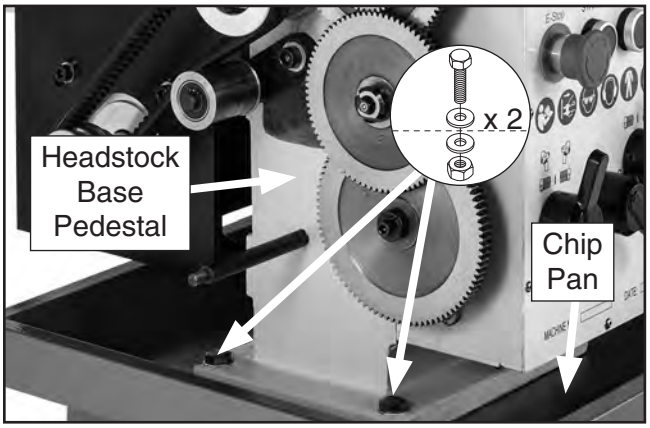

Figure 18. Lathe attached to stand and chip pan (left side mounting hardware shown).

16. Level machine as instructed in **Leveling** on **Page 24**, then proceed to **Step 17**.

17. Fully tighten fasteners installed in **Step 15**.

18. Install change gear cover.

Anchoring to Floor

Number of Mounting Holes 8
Diameter of Mounting Hardware..... ½"

Anchoring machinery to the floor prevents tipping or shifting and reduces vibration that may occur during operation, resulting in a machine that runs slightly quieter and feels more solid.

If the machine will be installed in a commercial or workplace setting, or if it is permanently connected (hardwired) to the power supply, local codes may require that it be anchored to the floor.

If not required by any local codes, fastening the machine to the floor is an optional step. If you choose not to do this with your machine, we recommend placing it on machine mounts, as these provide an easy method for leveling and they have vibration-absorbing pads.

Anchoring to Concrete Floors

Lag shield anchors with lag screws (see below) are a popular way to anchor machinery to a concrete floor, because the anchors sit flush with the floor surface, making it easy to unbolt and move the machine later, if needed. However, anytime local codes apply, you MUST follow the anchoring methodology specified by the code.

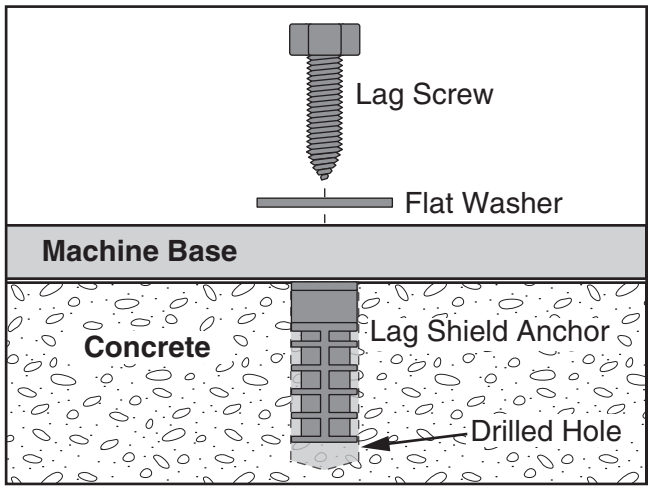

Figure 19. Popular method for anchoring machinery to a concrete floor.

Leveling

NOTICE

For accurate turning results and to prevent warping the cast iron bed and ways, the lathe bedways MUST be leveled from side-to-side and from front-to-back on both ends.

Recheck the bedways 24 hours after installation, two weeks after that, and then annually to make sure they remain level.

Leveling machinery helps precision components, such as bedways, remain straight and flat during the lifespan of the machine. Components on a machine that is not level may slowly twist due to the dynamic loads placed on the machine during operation.

If needed, use metal shims between the lathe bed and chip pan when leveling the machine.

For best results, use a precision level that is at least 12" long and sensitive enough to show a distinct movement when a 0.003" shim (approximately the thickness of one sheet of standard newspaper) is placed under one end of the level.

See the figure below for an example of a high precision level offered by Grizzly.

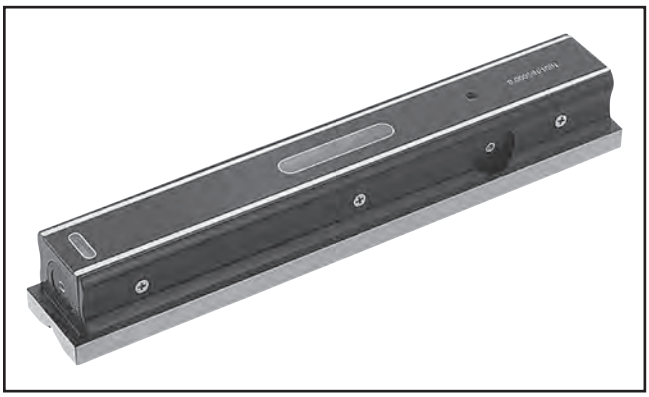

Figure 20. Model H2683 precision level.

Lubricating Lathe

The headstock, gearbox, and apron oil reservoirs must have the proper amount of oil in them before lathe can be operated.

Damage caused to bearings and gears from running lathe without oil in reservoirs will not be covered under warranty. Refer to **Lubrication** section, beginning on **Page 60**, for checking and adding oil.

In addition to reservoirs, we also recommend that you lubricate all other points on machine at this time. To do this, follow steps provided in maintenance schedule on **Page 59.**

Note: *If this lathe was shipped with oil in the reservoirs, do not change that oil until after the* ***Test Run*** *and* ***Spindle Break-In*** *procedures.*

Test Run

Once assembly is complete, test run the machine to ensure it is properly connected to power and safety components are functioning correctly.

If you find an unusual problem during the test run, immediately stop the machine, disconnect it from power, and fix the problem BEFORE operating the machine again. The **Troubleshooting** table in the **SERVICE** section of this manual can help.

The test run consists of verifying the following: 1) The motor powers up and runs correctly, and 2) the emergency stop button safety feature works correctly.

⚠WARNING

Serious injury or death can result from using this machine BEFORE understanding its controls and related safety information. DO NOT operate, or allow others to operate, machine until the information is understood.

⚠WARNING

DO NOT start machine until all preceding setup instructions have been performed. Operating an improperly set up machine may result in malfunction or unexpected results that can lead to serious injury, death, or machine/property damage.

To test run machine:

1. Clear away all tools and objects used during assembly, lubrication, and preparation.

2. Make sure that chuck and jaws, if installed, are secure (refer to **Chuck Installation** on **Page 31**).

   Note: *If chuck is not installed on lathe, you do not need to install one for this test.*

3. Verify master power switch (see **Figure 21**) is in OFF position.

4. Press E-Stop button (see **Figure 21**).

5. Move FWD/REV switch to "0" position (see **Figure 21**).

6. Rotate spindle speed dial all the way counterclockwise (see **Figure 21**).

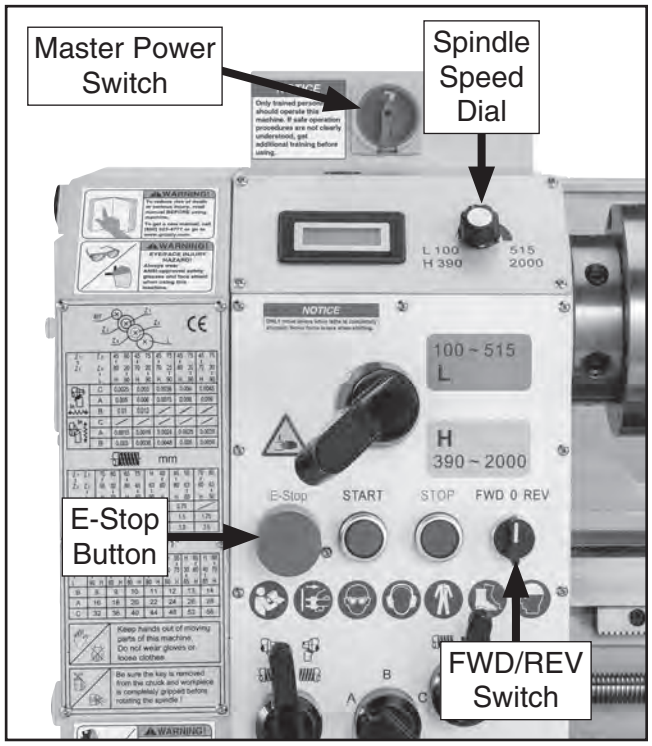

Figure 21. Headstock and gearbox controls.

Note: *In the next step, you may need to rock the chuck back and forth as you make the adjustments, so that the gears will mesh together.*

7. To ensure carriage components do not unexpectedly move during the following steps, disengage half nut lever and feed selection lever (see **Figure 22**). Rotate carriage and cross slide handwheels back and forth while moving levers to verify they are disengaged. When disengaged, handwheels will turn easily.

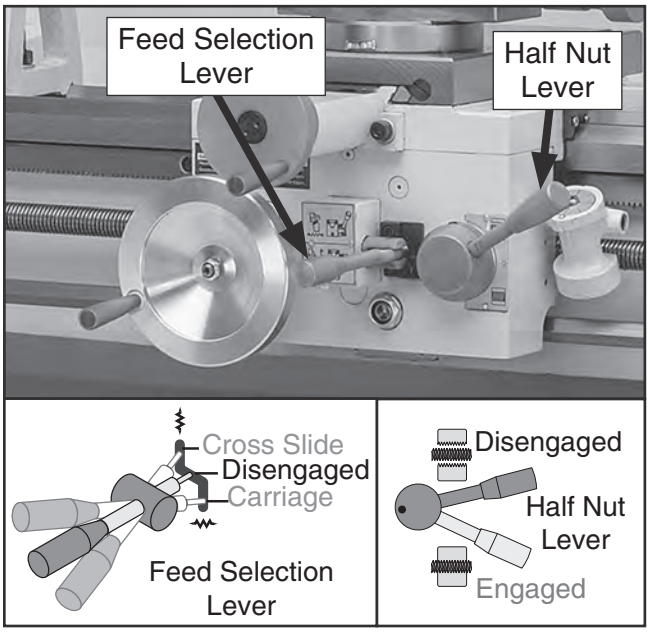

Figure 22. Disengaging carriage components.

8. Connect machine to power supply.

9. Turn master power switch to ON position, and reset E-Stop button by twisting it clockwise until it pops out.

10. Move spindle speed range lever to Low (L) position (see **Figure 23**).

11. Move FWD/REV switch to FWD position (see **Figure 23**).

12. Rotate spindle speed dial until spindle speed digital readout shows 150 RPM (see **Figure 23**).

13. Push START button (see **Figure 23**). Chuck should turn counterclockwise and down toward the front of the lathe.

    — When operating correctly, the machine will run smoothly with little or no vibration or rubbing noises.

    — Investigate and correct strange or unusual noises or vibrations before operating the machine further. Always disconnect the machine from power when investigating or correcting potential problems.

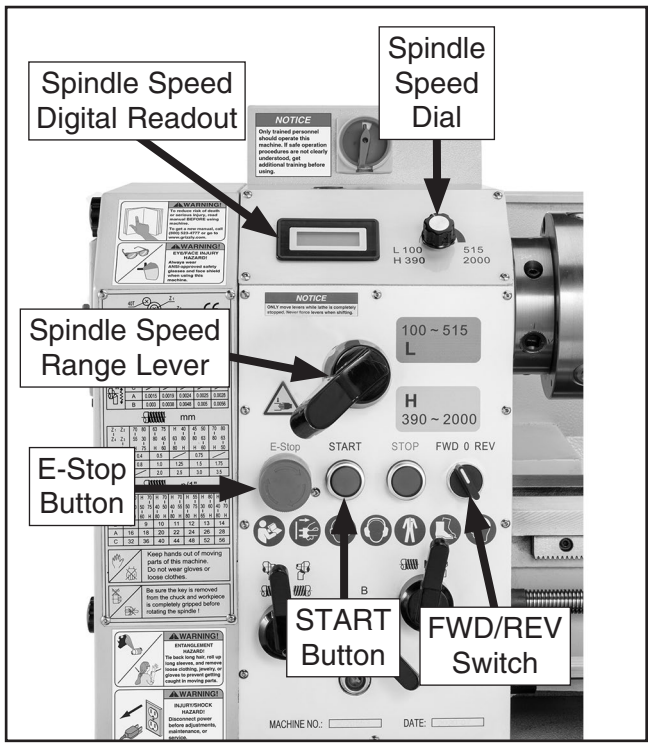

Figure 23. Spindle speed and rotation controls.

14. Press E-Stop button to turn machine ***OFF***.

15. WITHOUT resetting E-Stop button, try to start machine by pressing START button. The machine should not start.

    — If spindle rotation *does not* start, E-Stop safety feature is working correctly.

    — If spindle rotation *does* start, immediately turn machine ***OFF*** and disconnect power. The E-Stop button safety feature is NOT working properly and must be replaced before further using the machine.

16. Reset E-Stop button.

17. Push START button to verify machine will start.

18. Push STOP button to verify machine stops.

Congratulations! The test run is complete. Perform **Spindle Break-In** procedure on **Page 28**.

Spindle Break-In

Before subjecting the spindle to operational loads, it is essential to complete the break-in process. This helps maximize the life of spindle bearings and other precision components by thoroughly lubricating them before placing them under load.

After spindle break-in is complete, we recommend changing headstock and gearbox oil to remove any metal particles or debris that are present from the assembly and break-in process.

The break-in must be performed in succession with the **Test Run** procedure described in this manual, as the steps in that procedure prepare the lathe controls for the break-in process.

NOTICE

DO NOT perform this procedure independently of the Test Run section. The lathe could be seriously damaged if the controls are set differently than instructed in that section.

To perform spindle break-in:

1. Successfully complete **Test Run** procedure beginning on **Page 25**.

2. Set spindle speed range lever to Low (L) range, select forward spindle rotation, then turn machine ***ON*** and run spindle at 150 RPM for 10 minutes.

3. Stop spindle rotation and wait until spindle has come to a complete stop.

4. Select reverse spindle rotation and run spindle at 150 RPM for 10 minutes.

5. Repeat **Steps 2–4** at 400 RPM for 5 minutes.

6. Set FWD/REV switch to "0".

7. Set spindle speed range lever to High (H).

8. Run lathe at spindle speeds of 500, 1300, and 1800 RPM. Run for a minimum of 5 minutes at each speed in each direction of rotation.

9. Press E-Stop button and DISCONNECT MACHINE FROM POWER!

10. Change headstock and gearbox oil before operating machine further to ensure full machine warranty (refer to **Lubrication** on **Page 60**).

Recommended Adjustments

The following adjustments have been made at the factory. However, because of the many variables involved with shipping, we recommend you verify these adjustments to ensure the best results:

Factory adjustments that should be verified:

- Tailstock Alignment (**Page 39**).
- Backlash Adjustment (**Page 69**).
- Gib Adjustment (**Page 70**).

SECTION 4: OPERATIONS

Operation Overview

The purpose of this overview is to provide the novice machine operator with a basic understanding of how the machine is used during operation, so the machine controls/components discussed later in this manual are easier to understand.

Due to the generic nature of this overview, it is **not** intended to be an instructional guide. To learn more about specific operations, read this entire manual, seek additional training from experienced machine operators, and do additional research outside of this manual by reading "how-to" books, trade magazines, or websites.

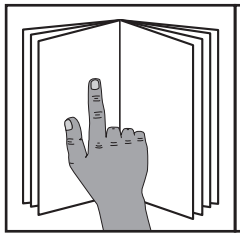

WARNING

To reduce your risk of serious injury, read this entire manual BEFORE using machine.

WARNING

To reduce risk of eye or face injury from flying chips, always wear approved safety glasses and face shield when operating this machine.

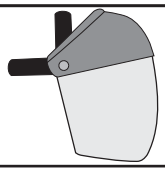

NOTICE

If you are not experienced with this type of machine, WE STRONGLY RECOMMEND that you seek additional training outside of this manual. Read books/magazines or get formal training before beginning any projects. Regardless of the content in this section, Grizzly Industrial will not be held liable for accidents caused by lack of training.

To complete a typical operation, the operator does the following:

1. Puts on safety glasses and a face shield, rolls up sleeves, removes jewelry, and secures any clothing or hair that could get entangled in moving parts.
2. Examines workpiece to make sure it is suitable for turning, then securely mounts it in lathe.
3. Installs tooling, aligns it with the workpiece, then backs it away to establish a safe startup clearance.
4. Removes all setup tools from lathe.
5. Checks for safe clearances by rotating workpiece by hand at least one full revolution.
6. Moves slides to where they will be used during operation.
7. Sets correct spindle speed range for operation.
8. If using power feed, selects proper feed rate for operation.
9. Presses E-Stop button, and connects machine to power supply.
10. Resets E-Stop button, and rotates master power switch to ON position.
11. Rotates spindle speed dial to correct speed for operation, then presses START button.
12. Uses carriage handwheels or power feed options to move tooling into workpiece for operation.
13. When finished cutting, presses STOP button, waits for the spindle rotation to stop, and then removes the workpiece.

Chuck & Faceplate Mounting

This lathe is equipped with a D1-type spindle nose. This type of spindle uses camlocks that are adjusted with a chuck key to securely mount a chuck or faceplate with repeatable precision and ease.

This lathe ships with the 3-jaw chuck installed. This is a scroll-type chuck where all three jaws move in unison when the chuck key is used.

The included 4-jaw chuck features independent jaws, which are used for square or unevenly-shaped stock, and to mount work that needs to be adjusted to near-zero total indicated runout.

This lathe ships with the 3-jaw chuck installed. This is a scroll-type chuck where all three jaws move in unison when the chuck key is used.

The included 4-jaw chuck features independent jaws, which are used for square or unevenly-shaped stock, and to mount work that needs to be adjusted to near-zero total indicated runout.

The included faceplate has slots for T-bolts that hold standard or custom clamping hardware. With the correct clamping hardware, a faceplate offers a wide range of uses, including machining non-concentric workpieces, straight turning between centers, off-center turning, and boring.

Camlock Stud Installation

Follow this procedure to install camlock studs in chucks, faceplates, or drive plates so they can be mounted to the spindle.

Note: *Skip this section if camlock studs are already installed.*

To install camlock studs:

1. Lightly oil threads of each stud.

2. Thread studs until datum line is flush with (or just above) surface and alignment groove is positioned over hole.

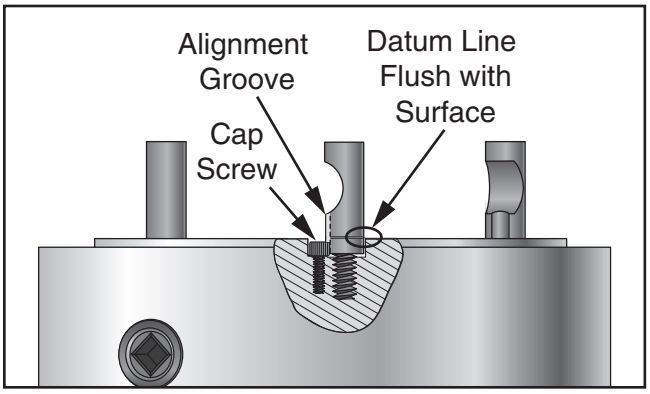

Figure 24. Camlock stud installation.

3. Install a cap screw in hole next to each stud. These cap screws prevent studs from rotating so they properly engage with camlock during installation.

   Note: *It is normal for studs to have a small amount of play or looseness after installing and tightening the cap screws.*

Chuck Safety & Support Devices

Because chucks are heavy and often awkward to hold, some kind of lifting, support, or protective device should be used during installation or removal. The weight and size of the chuck will determine the appropriate device to use (refer to the following figure for examples).

⚠WARNING

Accidentally dropping a chuck can cause amputation, crushing injuries, or property damage. To reduce this risk, always use some kind of lifting, support, or protective device during installation or removal.

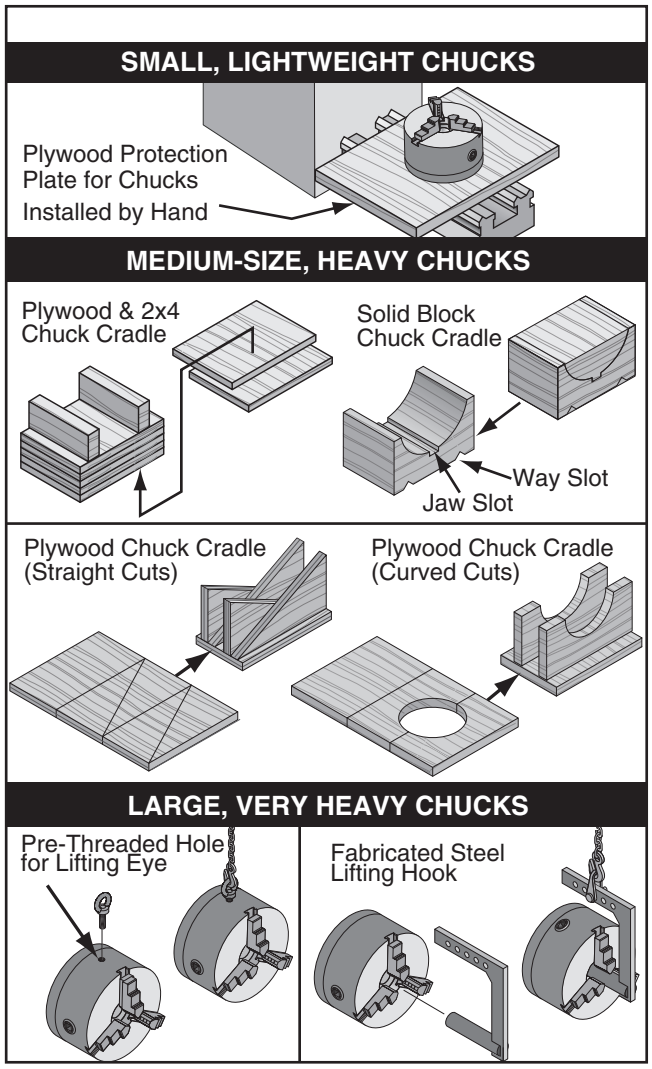

Figure 25. Examples of common devices used during chuck installation and removal.

Chuck Installation

To ensure accurate work, it is extremely important to make sure the spindle nose and chuck mating surfaces/tapers are clean. Even a small amount of lint or debris can affect accuracy.

The chuck is properly installed when all camlocks are tight, the spindle and chuck tapers firmly lock together, and the back of the chuck is firmly seated against the face of the spindle all the way around—without any gaps.

To install chuck:

1. DISCONNECT MACHINE FROM POWER!

2. Use appropriate lifting, support, or protective device to protect ways and support chuck during installation process (refer to **Chuck Safety & Support Devices**).

3. Clean and lightly oil camlock studs, then thoroughly clean mating surfaces of spindle and chuck.

4. Install chuck by inserting camlock studs straight into spindle cam holes.

   IMPORTANT: Avoid inserting the studs by pivoting them in from an angle or rotating the spindle. This can damage studs or spindle cam holes.

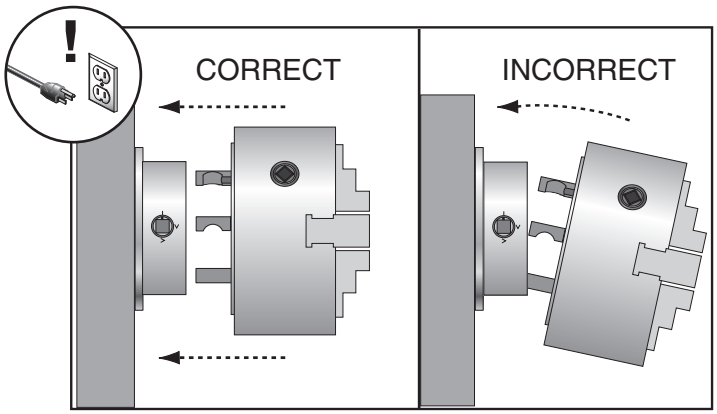

Figure 26. Inserting camlock studs into spindle cam holes.

5. Incrementally tighten camlocks in criss-cross or star pattern to ensure that chuck seats evenly against spindle.

6. When chuck is fully seated and all camlocks are tight, verify that cam line is between the two "V" marks on spindle nose, as shown in following figure.

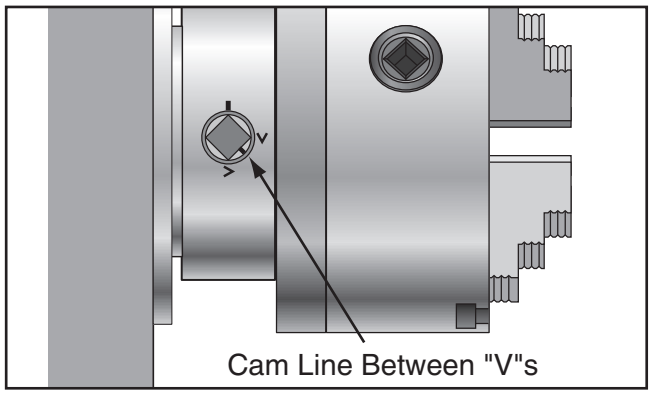

Figure 27. Cam line positioned between the "V" marks after the camlocks are fully tightened.

— If cam line is NOT between "V" marks when camlock is tight, stud may be installed at incorrect height. To fix this, adjust stud height as shown in following figure. Make sure to re-install stud cap screw afterward.

— If adjusting stud height does not correct problem, try swapping stud positions on chuck.

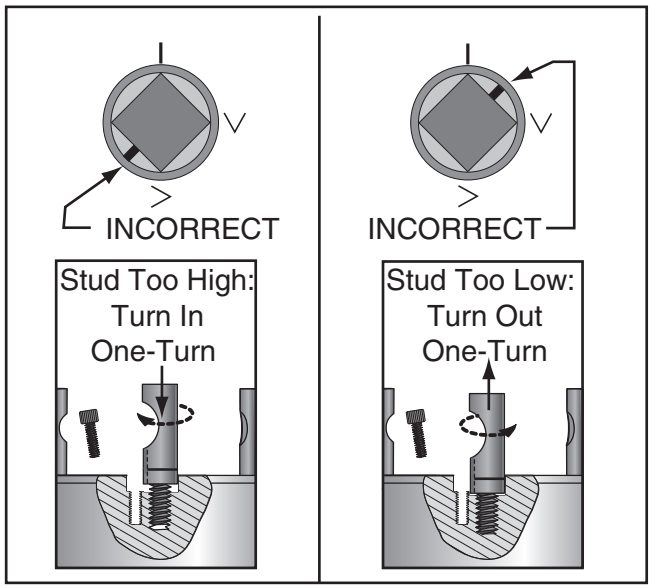

Figure 28. Correcting an improperly installed stud.

7. Verify that chuck fits spindle properly by checking for any gaps between mating surfaces.

— If there *is not* a gap, proceed to **Step 8**.

— If there *is* a gap, remove chuck, re-clean mating surfaces carefully, and re-install. If problem persists, contact our Tech Support.

8. Verify that chuck/spindle tapers are seated firmly together by removing chuck, per **Chuck Removal** instructions on following page, and pay close attention to how easily tapers release.

— If it was necessary to bump chuck or use a mallet to release tapers, then they are seating together properly.

— If tapers released easily with little intervention, they are not seated together firmly as required. Remove chuck, re-clean mating surfaces carefully, and re-install. If problem persists, contact our Tech Support.

Registration Marks

Lightly stamp registration marks across the mating seams of chuck components. These marks will help you re-install the chuck in the same position after removal, which ensures consistent chuck balance and turning results, and allows the same camlocks and studs to operate together for consistent locking and unlocking.

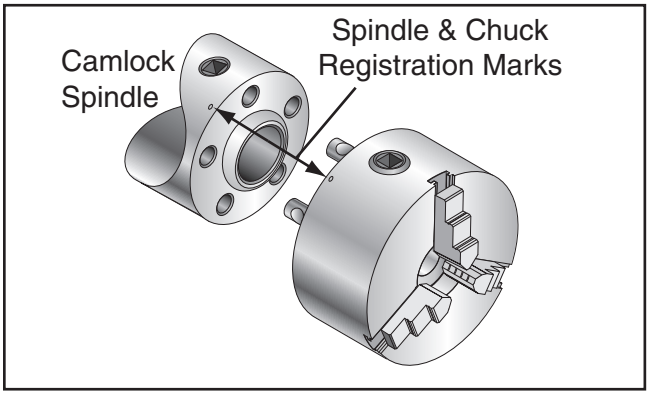

Figure 29. Registration mark locations.

Chuck Removal

To remove chuck:

1. DISCONNECT MACHINE FROM POWER!

2. Use appropriate lifting, support, or protective device to protect ways and support chuck (refer to **Chuck Safety & Support Devices** section for more details).

3. Loosen camlocks by turning key counter-clockwise until each cam line is aligned with its corresponding spindle mark, as shown below.

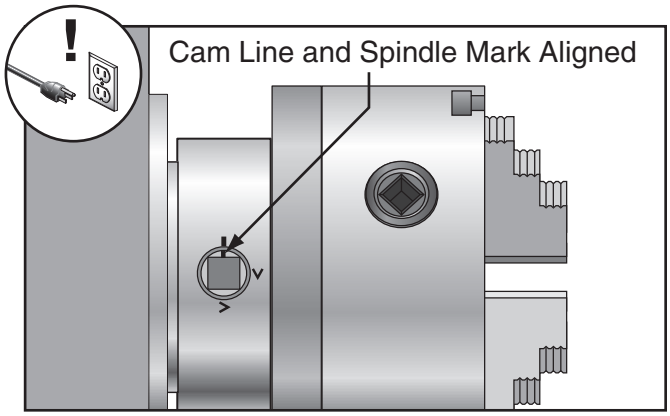

Figure 30. Camlock is fully loosened when the cam line is aligned with the spindle mark.

Tip: *Camlocks can become very tight. A cheater pipe may be used as a last resort to add leverage when loosening. After loosening, you may need to wiggle the chuck key in the camlock to fully disengage the stud.*

4. Using dead blow hammer or other soft mallet, lightly tap around outer circumference of chuck body to loosen it from spindle.

5. Remove chuck from spindle, using light rocking motion to carefully slide studs out of cam holes.

   — If chuck does not immediately come off, rotate it approximately 60° and tap it again. Make sure all marks on cams and spindle are properly aligned for removal.

Scroll Chuck Clamping

This 3-jaw, scroll-type chuck has an internal scroll-gear that moves all jaws in unison when adjusted with the chuck key. This chuck holds cylindrical parts on-center with the axis of spindle rotation and can be rotated at high speeds if the workpiece is properly clamped and balanced.

IMPORTANT: Never mix jaw types or positions to accommodate an odd-shaped workpiece. The chuck will spin out of balance and may throw the workpiece! Instead, use an independent jaw chuck or a faceplate.

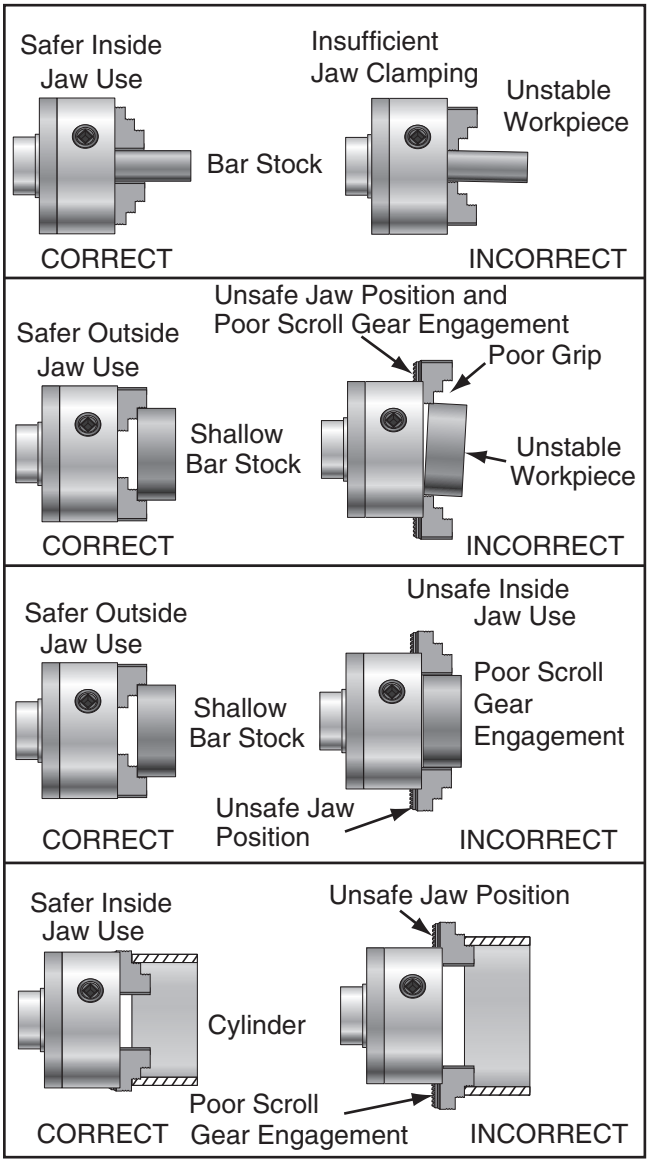

Figure 31. Jaw selection and workpiece holding.

Changing Jaw Set

The 3-jaw scroll chuck included with the lathe features inside and outside hardened steel jaw sets (see **Figure** below), which move in unison to center a concentric workpiece.

When installing the jaws, it is important to make sure they are installed correctly. Incorrect installation will result in jaws that do not converge evenly and are unable to securely clamp a workpiece.

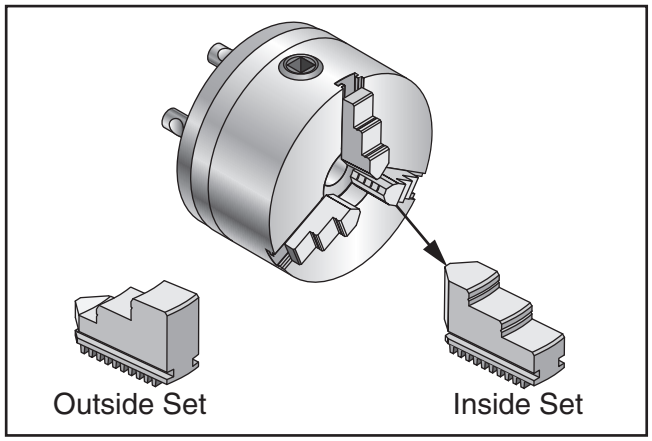

Figure 32. Chuck and jaw selection.

Jaws are numbered from 1–3 (see **Figure** below). The number is typically stamped on the side or bottom. Jaws are designed to be installed counterclockwise in numerical order in the jaw guides, so they will hold a concentric workpiece evenly.

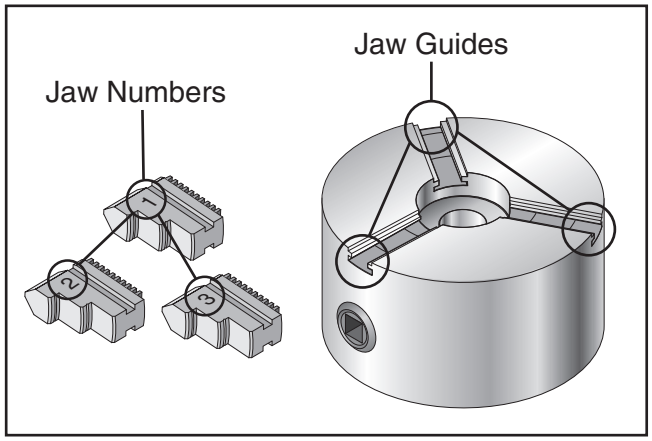

Figure 33. Jaw guides and jaw numbers.

To change jaw set:

1. DISCONNECT MACHINE FROM POWER!

2. Use appropriate device to protect ways (refer to **Installation & Removal Device** subsection).

3. Insert chuck key and turn it counterclockwise to back jaws out and remove them individually in descending order (i.e., 3, 2, 1).

4. Use mineral spirits to clean debris and grime from jaws and chuck jaw guides.

5. Apply thin coat of NLGI #2 grease to surfaces of removed jaw set. Store in safe place free from moisture and abrasives.

6. Rotate chuck key clockwise until you see tip of outer scroll-gear lead thread about to enter a jaw guide (see below).

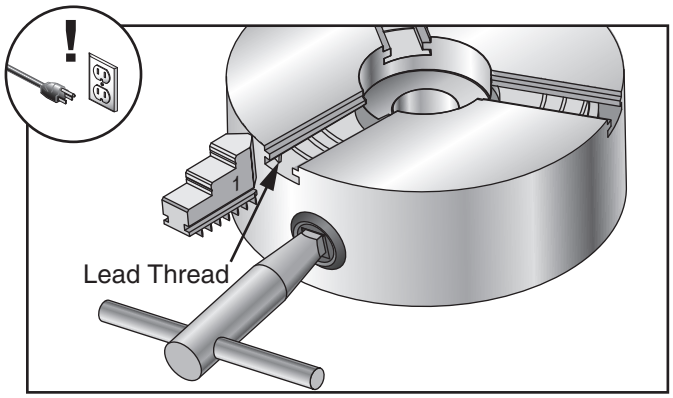

Figure 34. Lead thread on scroll gear.

7. Insert jaw #1 into jaw guide and hold jaw against scroll-gear.

8. Rotate chuck key clockwise one turn to engage tip of scroll-gear lead thread into jaw. Pull jaw; it should be locked into jaw guide.

9. Install remaining jaws in numerical order, in same manner. The jaws should converge evenly at center of chuck.

   — If jaws do not converge evenly, remove them. Re-install jaws sequentially 1–3, and make sure each one engages with scroll-gear lead thread during its first rotation.

4-Jaw Chuck

Refer to the **Chuck Installation** or **Chuck Removal** sections for instructions on installing or removing the 4-jaw chuck.

The 4-jaw chuck features independently adjustable jaws for holding non-concentric or off-center workpieces. Each jaw can be independently removed from the chuck body and reversed for a wide range of work-holding versatility.

⚠WARNING

Because of dynamic forces involved in machining a non-concentric or off-center workpiece, always use a low spindle speed to reduce risk of workpiece coming loose and being thrown from lathe, which could cause death or serious personal injury.

Mounting Workpiece

1. DISCONNECT MACHINE FROM POWER!

2. Use an appropriate device to protect ways (refer to **Chuck Safety & Support Devices** section for more details).

3. Use chuck key to open each jaw so workpiece will fit into spindle opening and lay flat against chuck face and jaw steps.

4. With help from another person or a holding device, position workpiece so it is centered in chuck.

5. Tighten each jaw in small increments. After tightening first jaw, continue tightening remaining jaws in an opposing sequence, similar to sequential order shown below.

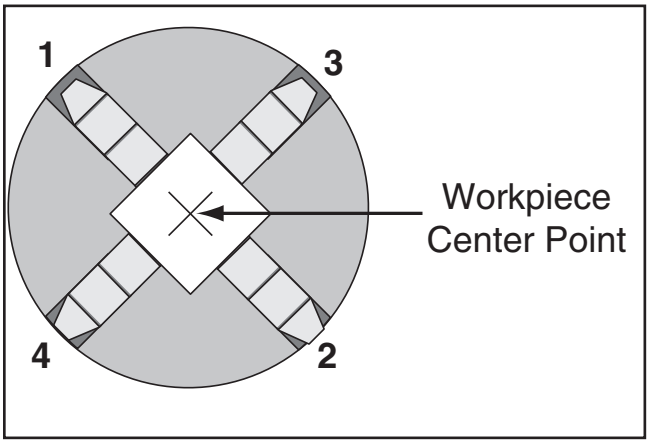

Figure 35. 4-jaw chuck tightening sequence.

6. After workpiece is secured by jaws, use dial indicator to make sure workpiece is centered in chuck.

   — If workpiece is not correctly centered, make fine adjustments by slightly loosening one jaw and tightening opposing jaw until workpiece is correctly positioned (see below for an example).

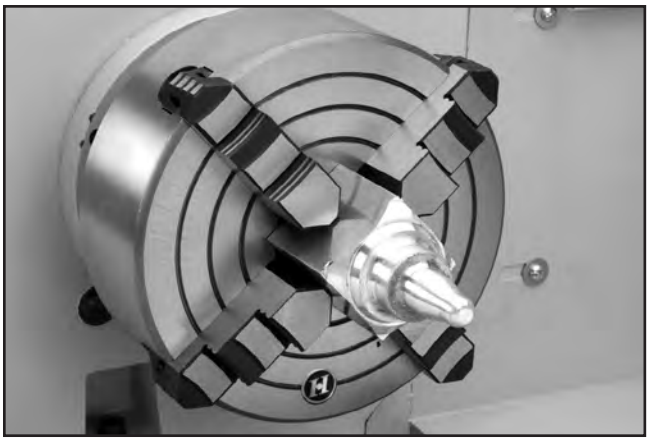

Figure 36. Example of a non-cylindrical workpiece mounted on a 4-jaw chuck.

Faceplate

Refer to the prior **Chuck Installation** and **Chuck Removal** subsections for instructions on installing or removing the faceplate.

The faceplate included with your lathe can be used for a wide range of operations, including machining non-concentric workpieces, straight turning between centers, off-center turning, and boring.

The tools needed for mounting a workpiece will vary depending on the type of setup you have.

⚠WARNING

Failure to properly secure workpiece to faceplate could cause workpiece to be thrown from lathe with deadly force. To reduce this risk, use a minimum of THREE independent clamping devices to hold workpiece onto faceplate.

⚠WARNING

Failure to properly secure workpiece to faceplate could cause workpiece to be thrown from lathe with deadly force. To reduce this risk, use a minimum of THREE independent clamping devices to hold workpiece onto faceplate.

To mount a non-concentric workpiece to a faceplate:

1. DISCONNECT MACHINE FROM POWER!

2. Position appropriate device across bed ways to protect them from any potential damage from workpiece contact during installation.

3. With help from another person or holding device to support workpiece, position it onto faceplate and clamp it in place with a minimum of three independent clamping devices (see below for an example).

   Be sure to take into account rotational and cutting forces that will be applied to workpiece when clamping it to faceplate. If necessary, use counter-weights to balance assembly and use a dial indicator to make sure workpiece is properly positioned for your operation.

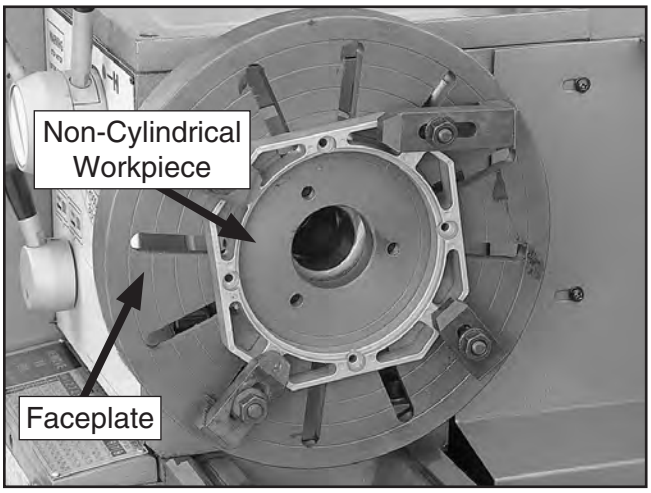

Figure 37. Example of a workpiece clamped in a faceplate.

Tailstock

The tailstock is typically used to support long workpieces at the side opposite the spindle, using a live or dead center. It can also hold a tapered drill bit (or a drill chuck with a regular drill bit) for boring holes. Unlike boring done with a drill press where the workpiece is fixed and the drill bit rotates, the drill bit in a tailstock remains stationary while the workpiece is rotated by the spindle.

The entire tailstock can be repositioned and locked in place along the length of the bed. An independently controlled offset adjustment allows the upper part of the tailstock to move perpendicular to the bedways so it can be aligned with the spindle center (for concentric turning) or offset from the spindle center (for tapered turning).

The tailstock quill also features independent adjustment controls that allow it to be advanced toward the spindle or locked firmly in position.

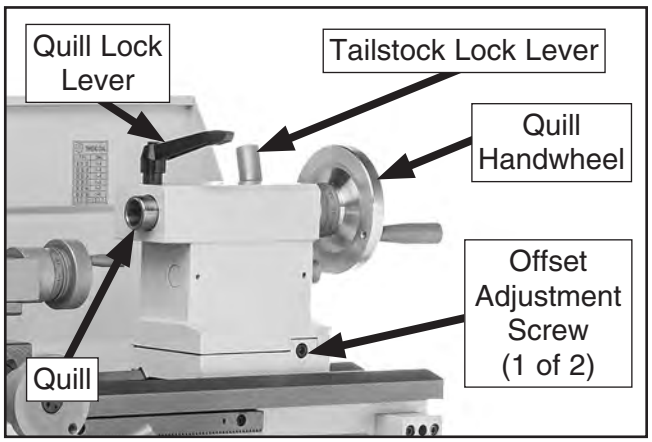

Figure 38. Tailstock controls and features.

Tailstock Quill Specs

Graduated Dial

Increments ..... 0.001"
One Full Revolution ..... 0.100"

Increments on Quill

Inch ..... 0"–3" in ⅛" Increments
Metric .....0–76mm in 1mm Increments

Positioning Tailstock

1. Rotate tailstock lock lever clockwise (facing machine) to unlock tailstock from bedways.

2. Slide tailstock to desired position by pushing it along the bedways.

3. Rotate tailstock lock lever counterclockwise to lock tailstock against bedways.

Using Quill

1. Rotate quill lock lever counterclockwise to loosen quill.

2. Turn quill handwheel clockwise to move quill toward spindle or counterclockwise to move it away from spindle.

3. Rotate quill lock lever clockwise to secure quill.

Installing Tooling

This tailstock uses a quill with an MT#3 taper that accepts tapered arbors and drill bits (see **Figure 39**).

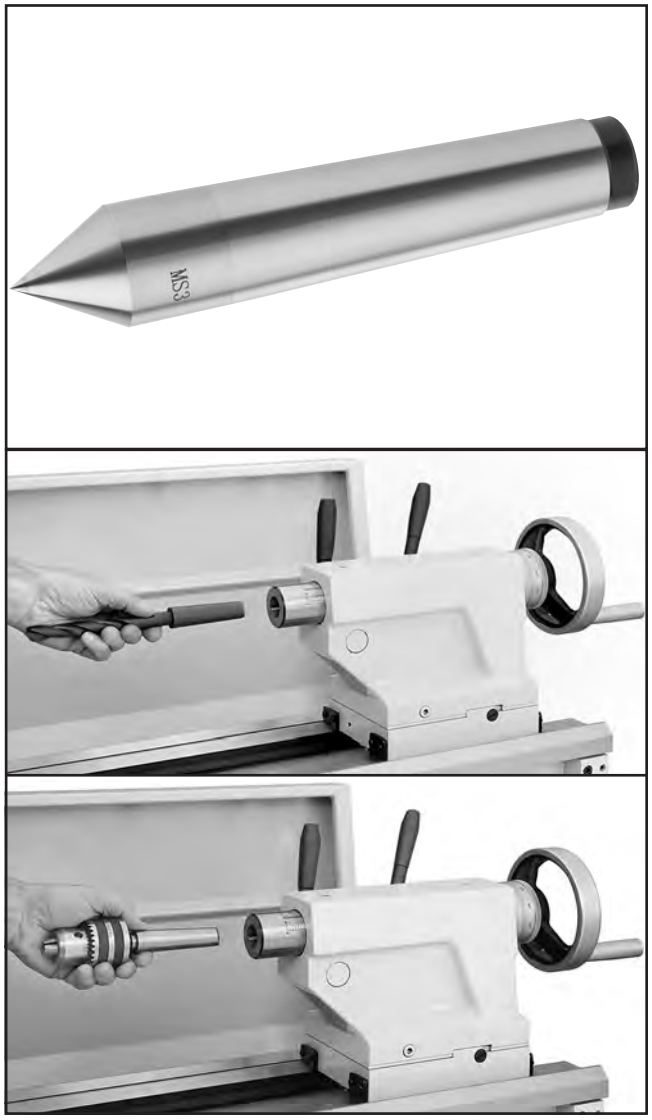

Figure 39. Example of inserting tools into tailstock.

Note: *If the tooling has an open hole in the end, then a screw can be threaded into the end of the tool to provide a solid surface for the quill pin to push against when the quill is retracted for tool removal. Otherwise, removal of such tooling may be difficult.*

To install tooling in tailstock:

1. With tailstock locked in place, unlock quill, then use handwheel to extend it approximately 1".
2. Thoroughly clean and dry tapered mating surfaces of quill and center, making sure no lint or oil remains on tapers.
3. With a firm and quick motion, insert tool into quill. Check to see if it is firmly seated by attempting to twist it—a firmly seated tool will not twist.
4. Unlock tailstock and move it until tip of tool is close to, but not touching, workpiece, then lock tailstock.
5. Start spindle rotation, unlock quill lock lever, then turn quill handwheel clockwise to feed tool into workpiece.

Removing Tooling

1. Use shop rag to hold tool.
2. Rotate quill handwheel counterclockwise to fully retract quill into tailstock until tool is forced out of quill.

Offsetting Tailstock

The tailstock quill can be offset from the spindle centerline for turning tapers. Offsetting the quill toward the front of the lathe results in a taper at the tailstock end. Conversely, offsetting the quill toward the back of the lathe results in a taper at the spindle end.

Note: *The marks on the offset indicator (see **Figure 40**) are arbitrary. For a precise offset, use a dial indicator to check quill movement while adjusting the screws.*

Tool Needed	Qty
Hex Wrench 4mm	1

To offset tailstock:

1. Move tailstock lock lever inward to loosen tailstock.

2. Rotate adjustment set screws in opposite directions for desired offset (see **Figure 40**).

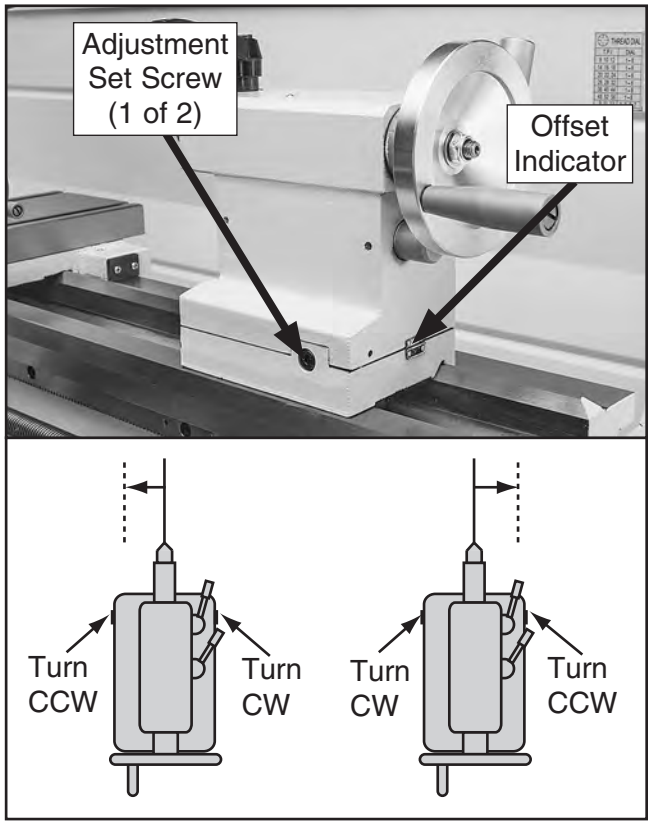

Figure 40. Set screw adjustment in relation to tailstock movement.

3. Move tailstock lock lever outward to lock tailstock in place.

Aligning Tailstock to Spindle Centerline

This is an essential adjustment that should be verified or performed each time the tailstock is used to turn concentric workpieces between centers or immediately after offsetting the tailstock when turning a taper. If the tailstock is not aligned with the spindle centerline when it is supposed to be, turning results will be inaccurate along the length of the workpiece.

Items Needed	**Qty**
Hex Wrench 6mm	1
Round Stock 2" x 6"	2
Precision Level	1

To align tailstock to spindle centerline:

1. Use precision level to make sure bedway is level from side to side and from front to back.

   — If bedway is not level, correct this condition before continuing with this procedure (refer to **Leveling** section in this manual).

2. Center drill both ends of a piece of round stock, then set it aside for use in **Step 5**.

3. Use another piece of round stock to make a dead center. Turn it to a 60° point, as illustrated below.

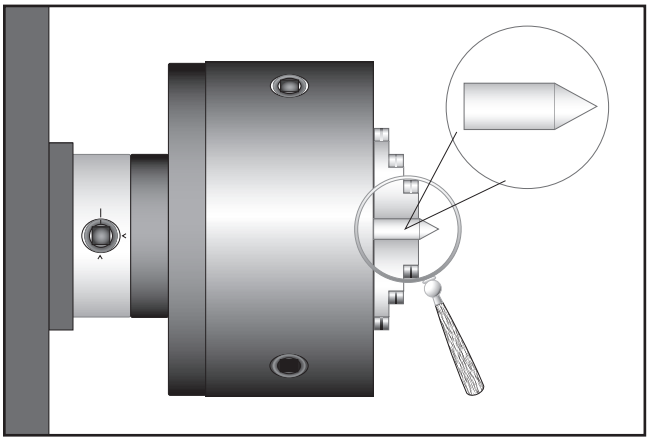

Figure 41. Turning a dead center.

Note: *As long as this dead center remains unmoved in the chuck, its point will remain true to the spindle centerline. However, if the center is removed and later returned to the chuck, the point must be re-turned to once again be true with the spindle centerline.*

4. Install center in tailstock.

5. Attach lathe dog to test stock from **Step 2**, then mount it between centers, as shown below.

Figure 42. Example of stock mounted between the centers.

6. Turn 0.010" off stock diameter.

7. Mount test or dial indicator so that plunger is on tailstock quill.

   Note: *If necessary in the following step, refer to the* ***Offsetting Tailstock*** *subsection for detailed instructions.*

8. Use calipers to measure both ends of workpiece.

   — If test stock is *thicker* at tailstock end, move tailstock toward *front* of lathe ½ the distance of taper amount, as shown below.

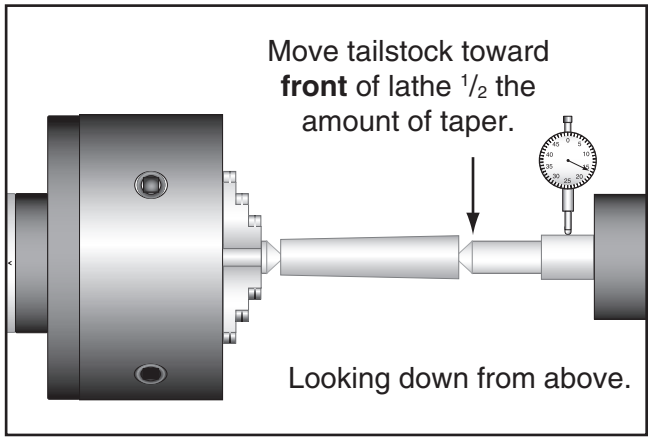

Figure 43. Adjust tailstock toward the operator.

   — If test stock is *thinner* at tailstock end, move tailstock toward *back* of lathe ½ the distance of taper amount, as shown below.

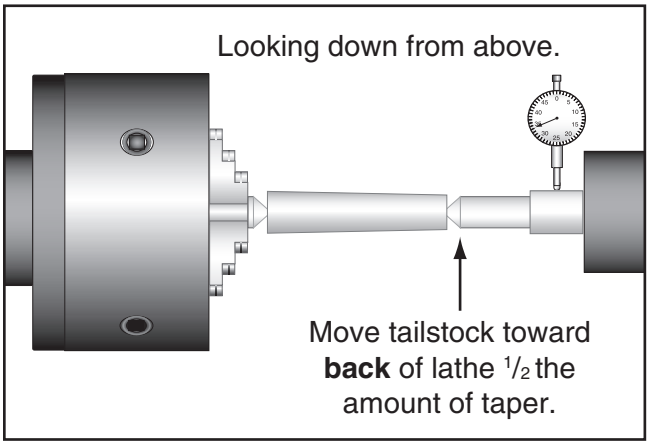

Figure 44. Adjust tailstock away from the operator.

9. Repeat **Steps 6–8** until desired accuracy is achieved.

Centers

Figure 45 shows the two MT#3 dead centers included with the lathe. In addition, an MT#5 x MT#3 spindle sleeve is included for mounting in the spindle.

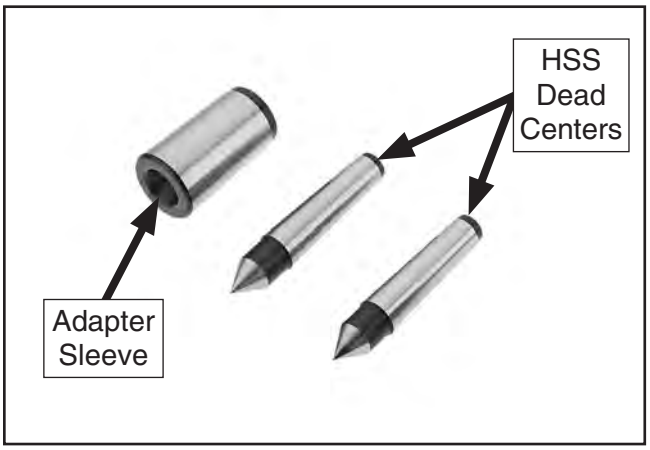

Figure 45. Adapter sleeve and centers.

Dead Centers

A dead center is a one-piece center that does not rotate with the workpiece and is used to support long, slender workpieces.

Use the dead center in the spindle for operations where the workpiece rotates with the center and does not generate friction.

The tip of the center must be generously lubricated during the operation to avoid premature wear and maximize smooth operation. Using low spindle speeds will also reduce the heat and wear from friction.

Mounting Dead Center in Spindle

1. DISCONNECT MACHINE FROM POWER!

2. Thoroughly clean and dry all threads and mating surfaces of spindle bore and center, making sure that no lint or oil remains on these surfaces.

   Note: *This will prevent the tapered surfaces from seizing due to operational pressures, which could make it very difficult to remove the center.*

3. Mount chuck or faceplate onto spindle, whichever is correct for your operation.

4. Insert center into tapered spindle sleeve, then insert center into spindle bore.

   The **Figure** below shows an example photo of a dead center installed in spindle, using a lathe dog and faceplate for turning between centers.

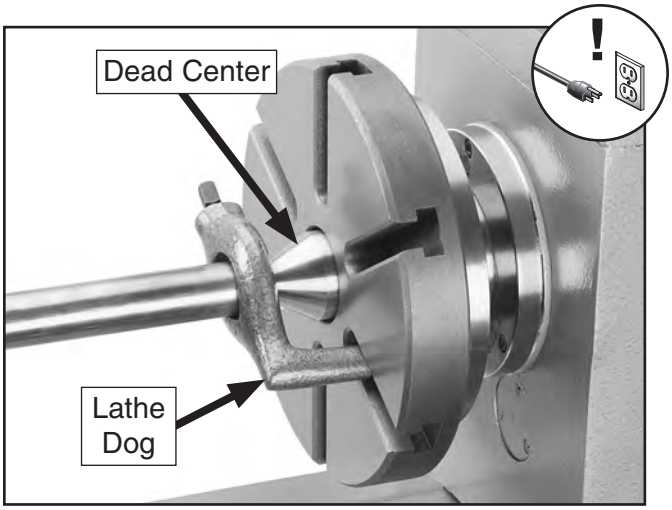

Figure 46. Example of using a dead center with a faceplate and lathe dog.

Removing Center from Spindle

To remove the sleeve and center from the spindle, insert a piece of round bar stock (or similar) through the outside end of the spindle. Have another person hold onto the sleeve and center with a gloved hand or shop rag, then tap the bar stock to knock the sleeve loose.

Mounting Center in Tailstock

Either a carbide-tipped dead center or live center can be used in the tailstock. Mounting instructions are the same for both. The **Figure** below shows an example photo of a dead center mounted in a tailstock.

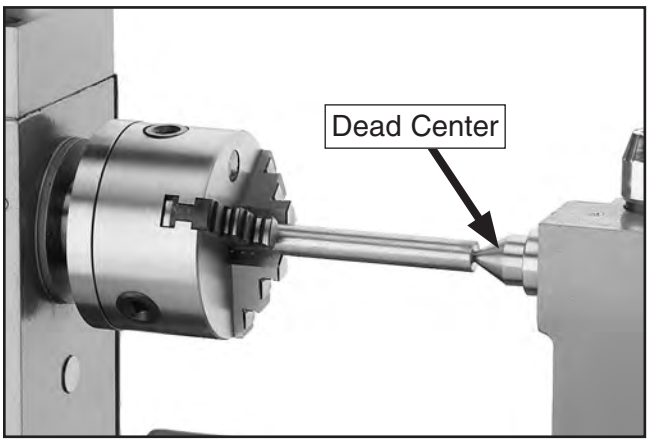

Figure 47. Example of using a carbide-tipped dead center installed in the tailstock.

NOTICE

To avoid premature wear of dead center or damage to workpiece, use low spindle speeds and keep tip of dead center mounted in tailstock well lubricated.

To mount a center in tailstock:

1. DISCONNECT MACHINE FROM POWER!

2. Thoroughly clean and dry tapered mating surfaces of tailstock quill bore and center, making sure no lint or oil remains on tapers.

3. Use quill handwheel to feed quill out from casting approximately 1".

   Note: *The maximum quill travel is 3⅛", but we do not recommend extending the quill more than 2" or stability and accuracy will be reduced.*

4. Insert center into tailstock quill.

5. Seat center firmly into quill during workpiece installation by rotating quill handwheel clockwise to apply pressure with center engaged in center hole of workpiece.

   Note: *Only apply enough pressure with tailstock quill to securely mount workpiece between centers. Avoid overtightening center against workpiece, or it may become difficult to remove later, and it will result in excessive friction and heat, which may damage workpiece and center.*

Removing Center from Tailstock

To remove the center from the quill, hold onto it with a gloved hand or shop rag, then rotate the quill handwheel counterclockwise to draw the quill back into the casting until the center releases.

Mounting Workpiece Between Centers

1. DISCONNECT MACHINE FROM POWER!

2. Drill center holes in both ends of workpiece.

3. Install dead center in spindle with lathe dog and chuck, faceplate or drive plate, then install live center or carbide-tipped dead center in tailstock.

4. Lubricate dead center point and workpiece center holes, then mount workpiece between centers and hold it in place with light pressure from tailstock center.

5. Seat center firmly into quill by rotating quill handwheel clockwise to apply pressure against workpiece (see example below).

Figure 48. Example photo of a workpiece mounted between the centers.

Note: *Only apply enough pressure to securely mount the workpiece between centers. Avoid over-tightening the center against the workpiece, or it may become difficult to remove later. Also, over-tightening will result in excessive friction and heat, which may damage the workpiece or center.*

Steady Rest

The steady rest supports long shafts and can be mounted anywhere along the length of the bedway. Familiarize yourself with the steady rest components shown below to better understand the controls before using it.

Tools Needed	**Qty**
Open-End Wrenches 14, 19mm	1
Hex Wrench 5mm	1

To install and use steady rest:

1. DISCONNECT MACHINE FROM POWER!

2. Thoroughly clean all mating surfaces, then place steady rest base on bedways so triangular notch fits over bedway prism.

3. Position steady rest with base clamp where required to properly support workpiece, then tighten hex nut shown in **Figure 49** to secure it in place.

4. Loosen finger lock nuts (see **Figure 49**) so position of fingers can be adjusted.

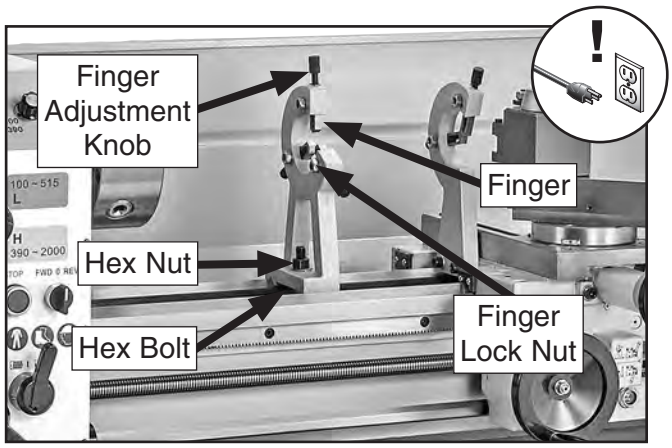

Figure 49. Steady rest components.

5. Use finger adjustment knobs (see **Figure 50**) to position fingers so they just touch workpiece without causing deflection.

   Note: *The maximum quill travel is 3⅛", but we do not recommend extending the quill more than 2" or stability and accuracy will be reduced.*

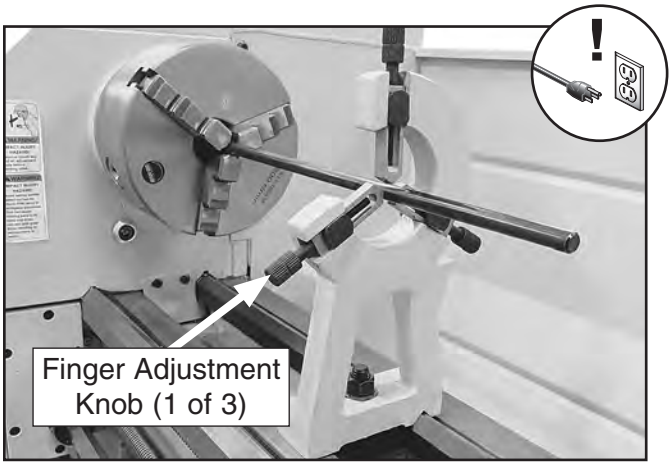

Figure 50. Example of workpiece mounted in steady rest.

6. Tighten finger lock nuts to secure settings.

   Note: *To reduce the effects of friction, lubricate the fingers with anti-sieze lubricant such as Grizzly Model T23962 ISO Moly-D Way Oil (see* ***Accessories*** *on* ***Page 57****) during operation.*

Follow Rest

The follow rest mounts to the saddle with two cap screws (see **Figure 51**). It is used on long slender parts to prevent workpiece deflection from the pressure of the cutting tool during operation. Adjust the finger adjustment knobs in the same manner as those on the steady rest.

Tip: *To reduce the effects of friction, lubricate the finger tips with generous amounts of anti-sieze lubricant during operation.*

Tools Needed	**Qty**
Hex Wrench 5mm	1
Open-End Wrench 14mm	1

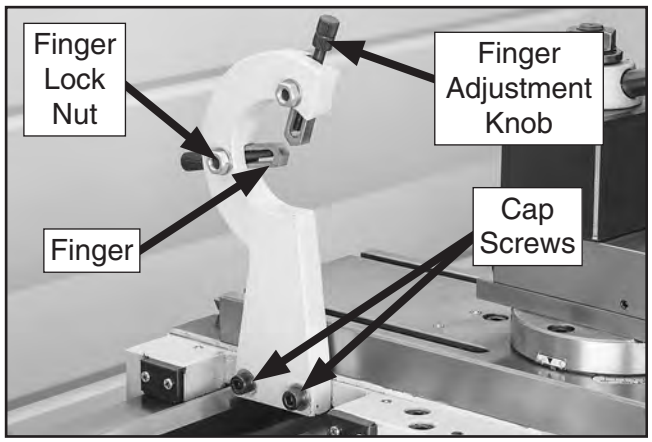

Figure 51. Follow rest components.

Carriage & Slide Locks

The carriage, cross slide, and compound rest have locks that can be tightened to provide additional rigidity during operation, especially during heavy- cuts.

See **Figures 52–53** to identify the locks for each device.

Tool Needed	**Qty**
Hex Wrench 6mm	1

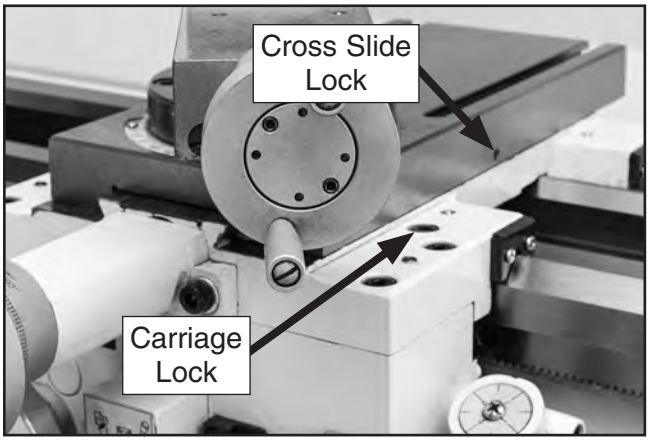

Figure 52. Location of carriage and cross slide locks.

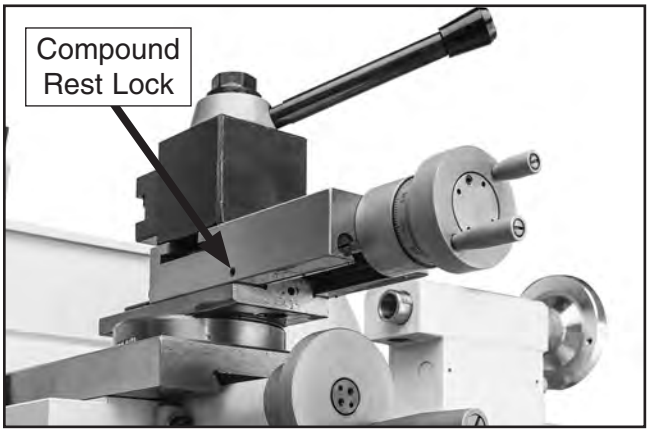

Figure 53. Location of compound rest lock.

Compound Rest

The compound rest handwheel has an indirect-read graduated scale. This means that the distance shown on the scale represents the actual distance the cutting tool moves. The base of the compound rest has another graduated scale used for setting the cutting tool to a specific angle.

Graduated Dial
Increments..... 0.001"
One Full Revolution.....0.200"

Tool Needed **Qty**
Open-End Wrench 19mm..... 1

To set the compound rest at a certain angle:

1. Loosen two cap screws at the base of compound rest (see **Figure 54**).

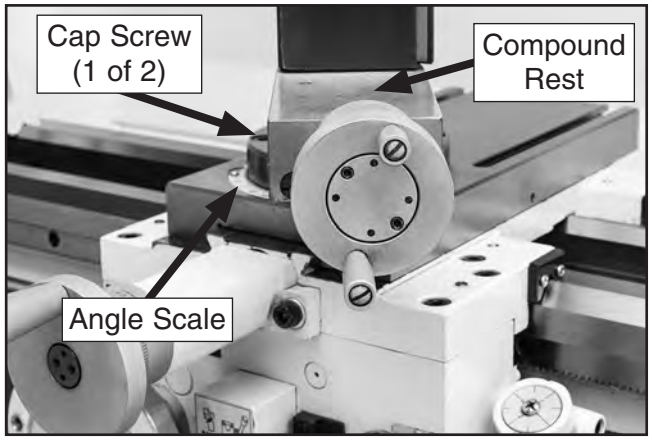

Figure 54. Compound rest angle adjustments.

2. Rotate rest to desired angle, as indicated by scale at base, then retighten two cap screws.

   Tip: *The first time you set the angle of the compound rest for cutting threads, mark the location on the cross slide as a quick reference point. This will allow you to quickly return the compound rest to that exact angle the next time you need to cut threads.*

Tool Post

The quick-change tool post (see **Figure below**) is a 200-series design.

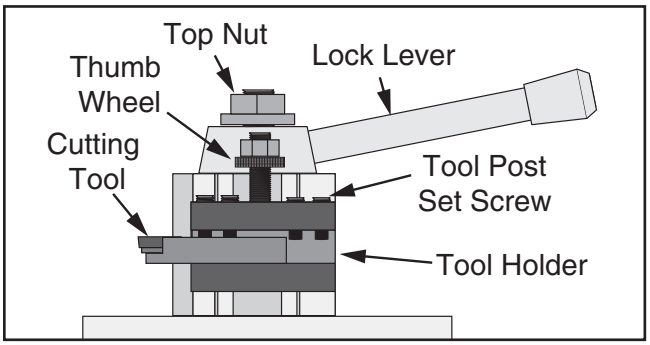

Figure 55. Example of tool mounted in tool post.

Tool holders can be quickly loaded and unloaded using the lock lever, and rotated by loosening the top nut. Tools up to ⅝" can be secured by tightening the tool holder set screws. The thumb wheel rotates to adjust cutting tool height.

Installing Tool in Tool Post

Tools Needed **Qty**
Open-End Wrench or Socket 27mm 1
Hex Wrench 5mm..... 1

To install tool in tool post:

1. Position tool in holder so cutting edge extends just enough to allow tool to cut freely—but no more. The cutting edge must be well supported to ensure good cutting results and avoid chipping.

⚠WARNING

Over-extending a cutting tool from the post will increase risk of tool chatter, breakage, or tool loosening during operation, which could cause metal pieces to be thrown at the operator or bystanders with great force. DO NOT extend a cutting tool more than 2.5 times the width of its cross-section (e.g., 2.5 x 0.5" = 1.25").

2. Secure tool with at least two set screws.

3. Adjust cutting tool height to spindle centerline, as instructed in next subsection.

Aligning Cutting Tool with Spindle Centerline

For most operations, the cutting tool tip should be aligned with the spindle centerline, as illustrated below.

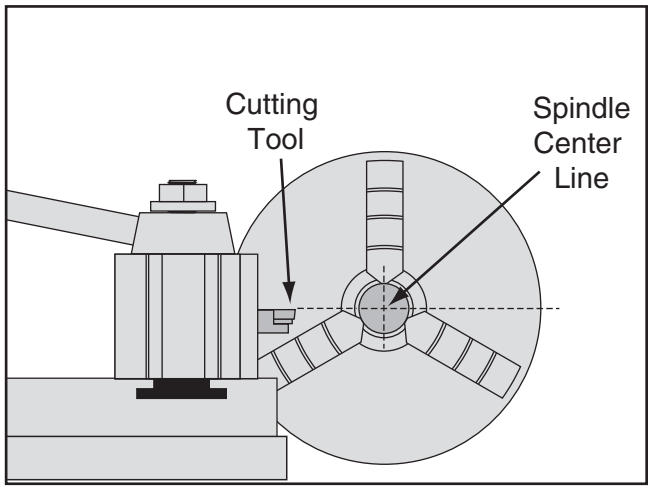

Figure 56. Cutting tool aligned with spindle centerline (viewed from tailstock).

There are a number of ways to check and align the cutting tool to the spindle centerline. If necessary, you can raise the cutting tool by placing steel shims underneath it. The shims should be as long and as wide as the cutting tool to properly support it.

Below are two common methods:

- Move the tailstock center over the cross slide and use a fine ruler to measure the distance from the surface of the cross slide to the tip of the center. Adjust the cutting tool height so it is the same distance above the cross slide as the tailstock center.

- Align the tip of the cutting tool with a tailstock center, as instructed in the following procedure. For this to work, the tailstock must be aligned to the spindle centerline (refer to **Aligning Tailstock To Spindle Centerline** for detailed instructions).

Tools Needed	**Qty**
Hex Wrench 5mm	1
Open-End Wrench or Socket 17mm	1
Steel Shims	As Needed
Cutting Tool	1
Precision Ruler	1
Tailstock Center	1

To align cutting tool with tailstock center:

1. Mount cutting tool in tool post, then secure post so tool faces tailstock.

2. Install center in tailstock, and position center tip near cutting tool tip.

3. Lock tailstock and quill in place.

4. Adjust height of cutting tool so tool tip is aligned vertically with center tip, as illustrated below.

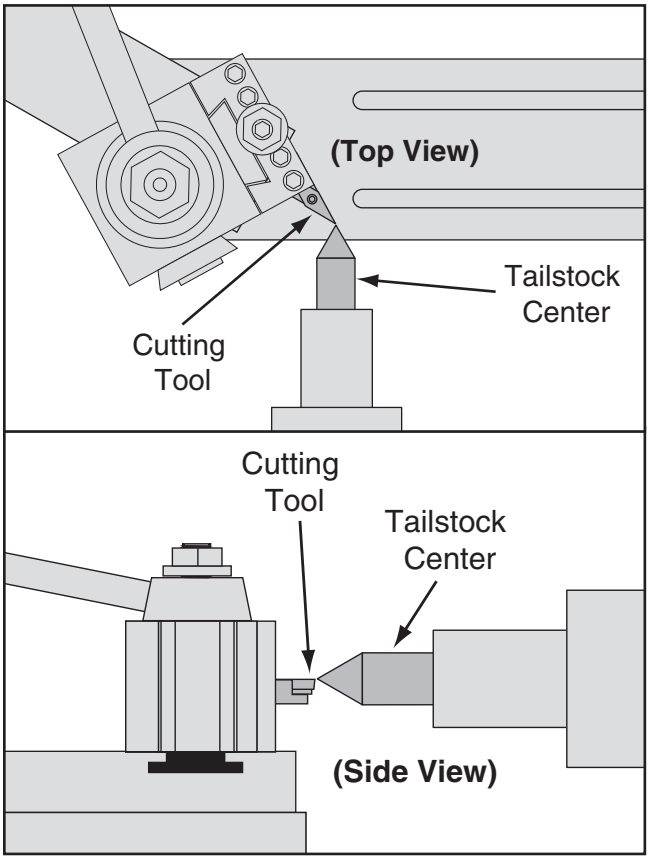

Figure 57. Cutting tool aligned to the tailstock center.

Spindle Spider

This lathe is equipped with a set of outboard spindle supports otherwise known as a "spider" (see **Figure 58**).

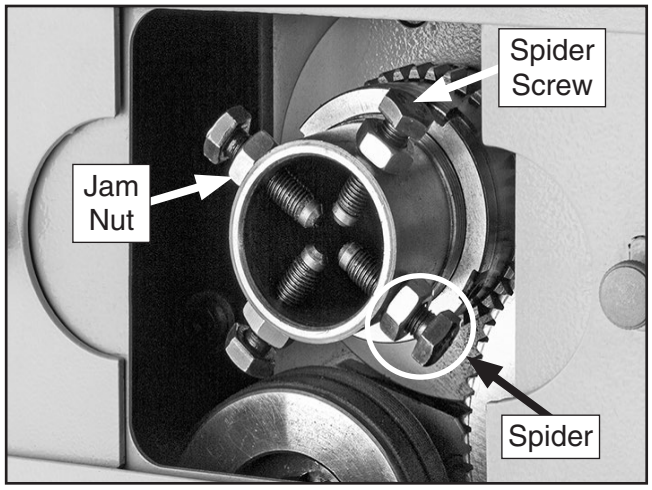

Figure 58. Spindle spider components.

⚠CAUTION

Remove spider screws when not in use. Always DISCONNECT LATHE FROM POWER when installing, removing, or adjusting spider screws. Ignoring this warning can lead to personal injury or machine damage.

The spider is especially designed for supporting gun barrels during chambering operations; however, it is a great support option for almost any long workpiece that extends through the outboard side of the spindle.

The tips of the spider screws have brass wear pads that hold the workpiece without causing indents in the finish.

When spider screws are installed, always use the jam nuts to lock each spider screw in position. Merely tightening the spider screws against the workpiece and leaving the jam nuts loose is not safe. Spiders screws that loosen during operation can crash into the lathe end cover.

Manual Feed

The cutting tool can be manually fed into the workpiece using the carriage, cross slide, and compound rest handwheels shown below.

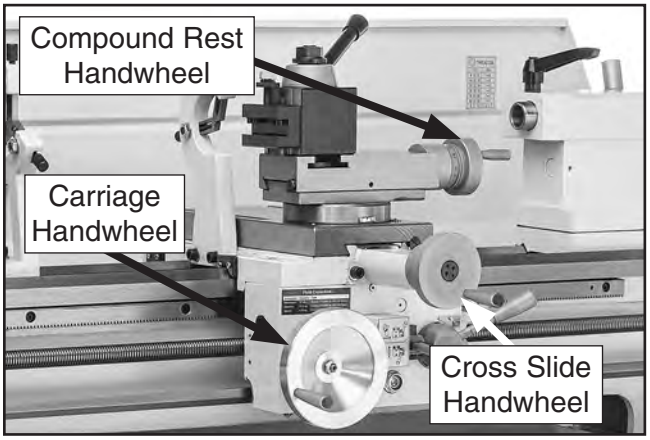

Figure 59. Manual feeding controls.

Carriage Handwheel

The carriage handwheel moves the carriage left or right along the bed. It has a graduated dial with 0.01" increments. One full revolution moves the carriage 1.2".

Cross Slide Handwheel

The cross slide handwheel moves the tool toward and away from the work. Adjust the position of the graduated scale by loosening the thumb knob, holding the handwheel with one hand and turning the dial with the other, then tightening the thumb knob. The cross slide handwheel has a direct-read graduated dial, which shows the total amount of material removed from the diameter of the workpiece. The dial has 0.002" increments, and one full revolution moves the slide 0.2". Rotate the dial collar 180° to read in metric units.

Cross Slide Handwheel

The compound rest handwheel moves the cutting tool linearly along the set angle of the compound rest. Adjust the position of the graduated scale in a similar manner with handwheel and dial. The compound rest angle is set by hand-rotating it and securing in place with four hex nuts. The compound rest has an indirect-read graduated dial with 0.001" (0.025mm) increments. One full revolution of the handwheel moves the slide 0.1".

Spindle Speed

Using the correct spindle speed is important for getting safe and satisfactory results, as well as maximizing tool life.

To set the spindle speed for your operation, you will need to: 1) Determine the best spindle speed for the cutting task, and 2) Configure the lathe controls to produce the required spindle speed.

Determining Spindle Speed

Many variables affect the optimum spindle speed to use for any given operation, but the two most important are the recommended cutting speed for the workpiece material and the diameter of the workpiece, as noted in the formula shown below.

$$\frac{\text{*Recommended Cutting Speed (FPM)} \times 12}{\text{Dia. of Cut (in inches)} \times 3.14} = \text{Spindle Speed (RPM)}$$

*Double if using carbide cutting tool

Figure 60. Spindle speed formula for lathes.

Cutting speed, typically defined in feet per minute (FPM), is the speed at which the edge of a tool moves across the material surface.

A recommended cutting speed is an ideal speed for cutting a type of material in order to produce the desired finish and optimize tool life.

The books **Machinery's Handbook** or **Machine Shop Practice**, and some internet sites, provide excellent recommendations for which cutting speeds to use when calculating the spindle speed. These sources also provide a wealth of additional information about the variables that affect cutting speed and they are a good educational resource.

Also, there are a large number of easy-to-use spindle speed calculators that can be found on the internet. These sources will help you take into account the applicable variables in order to determine the best spindle speed for the operation.

Setting Spindle Speed

Selecting one of the two spindle speed ranges is performed by positioning the spindle speed range lever (see **Figure 61**) to Low (L) or High (H) range.

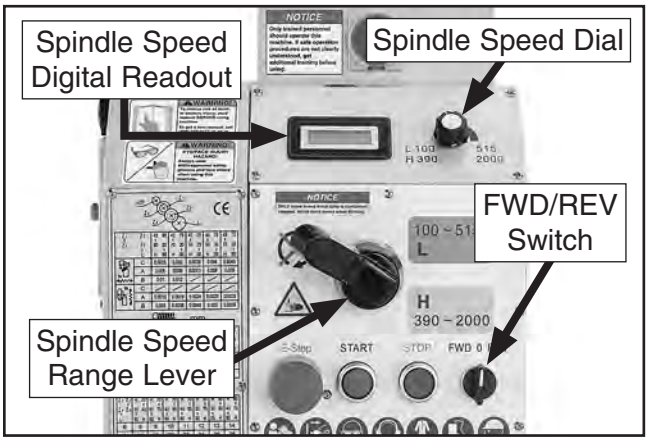

Figure 61. Spindle range and speed levers.

The spindle speed dial is then used to determine the precise spindle speed within the selected speed range.

Note: *To maximize spindle torque, always use low range RPM speeds for heavier cuts. If required spindle speed exceeds 515 RPM (low range maximum) it is acceptable to use higher RPM range with lighter cuts.*

NOTICE

To avoid damaging gears, ALWAYS make sure the spindle is completely stopped BEFORE moving the spindle speed lever.

Follow along with this example for setting the spindle speed for the Model G0949G to gain a better understanding of the task:

To set spindle speed to 150 RPM:

1. Move FWD/REV switch to "0".
2. Move spindle speed range lever to Low (L) position (see **Figure 61**).
3. Move FWD/REV switch to FWD, and press the START button.
4. Adjust spindle speed dial until spindle speed digital readout shows 150 RPM.

Power Feed

Both the carriage and cross slide have power feed capability when the carriage is engaged with the feed rod. The rate that these components move per revolution of the feed rod is controlled by the quick-change gearbox levers and dial positions and the end gear configuration.

The feed per revolution and the spindle speed must be considered together—this is the feed rate. The sources you use to determine the optimum spindle speed for an operation will also provide the optimal feed to use with that spindle speed.

Often, the experienced machinist will use the feeds and speeds given in their reference charts or web calculators as a starting point, then make minor adjustments to the feed rate (and sometimes spindle speed) to achieve the best results.

The carriage can alternately be driven by the leadscrew for threading operations. However, this section only covers the use of the power feed option for the carriage and cross slide components for non-threading operations. To learn how to power the carriage for threading operations, refer to **Threading on Page 54**.

NOTICE

If the feed selection lever and the half nut are engaged at the same time, machine damage could occur. Even though there is a lock-out device to prevent this, it could break if forced.

NOTICE

Before using any power feed or threading operations, make sure to loosen carriage lock first. Ignoring this warning can cause serious machine damage.

NOTICE

To avoid damaging the lathe, ALWAYS make sure the spindle is completely stopped BEFORE using the headstock controls to make changes.

Power Feed Controls

Use **Figures 62–66** and the following descriptions to understand the power feed controls.

Note: *Before using power feed, you may have to reconfigure the end gears, depending on how they are set up. Refer to* ***End Gears*** *on* ***Page 51*** *for detailed instructions.*

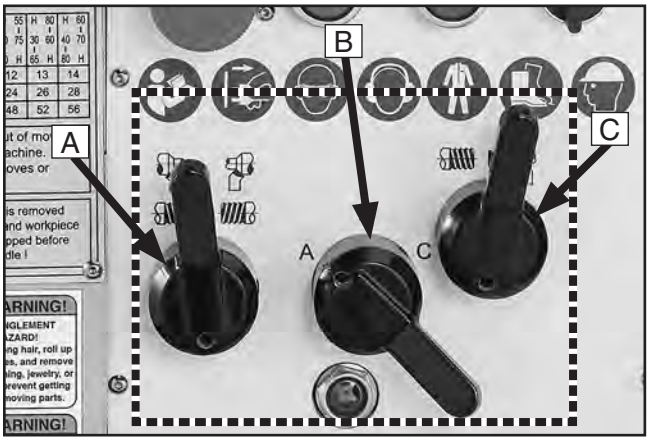

Figure 62. Power feed controls on the headstock.

A. Feed Direction Selector: Selects direction of carriage travel for power feed relative to the rotation direction of spindle. When lever is positioned as shown in **Figure 62**, carriage will move left (toward the spindle), or cross feed will travel toward rear of lathe when spindle is rotating counterclockwise (or toward front of lathe). When lever is positioned in opposite direction, carriage will move right (toward tailstock), or cross feed will travel toward front of lathe when spindle is rotating clockwise (or toward the rear of lathe).

B. Feed Rate Selector: Sets desired feed/thread rate. Refer to **Setting Power Feed Rate** subsection on **Page 50** for detailed instructions.

C. Feed/Thread Selector: Left position selects thread. Right position selects feed.

D. Feed Rate Chart: Used to determine combination of selector settings and end gear combinations to achieve desired result (see **Figure 63**).

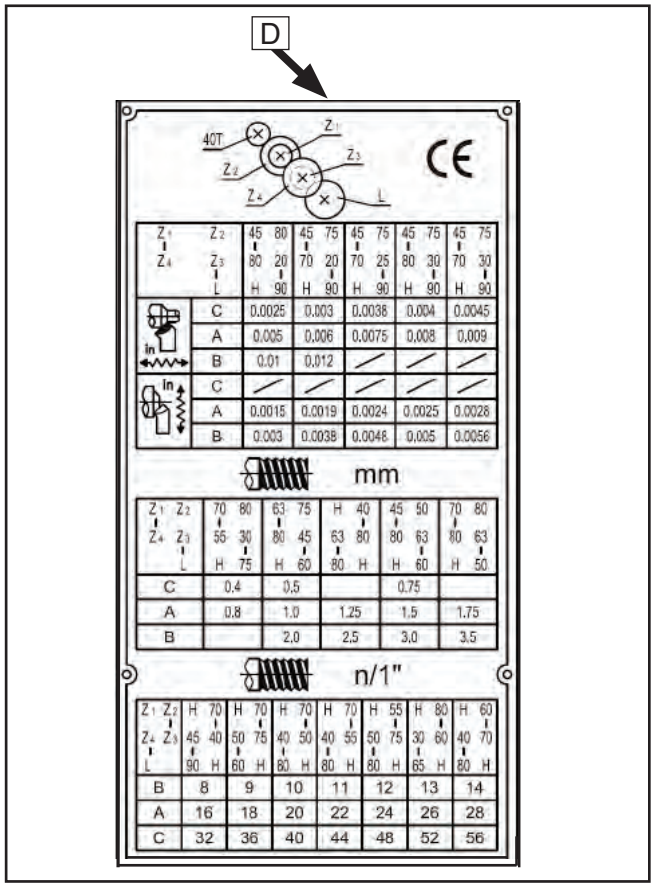

Figure 63. Feed rate chart.

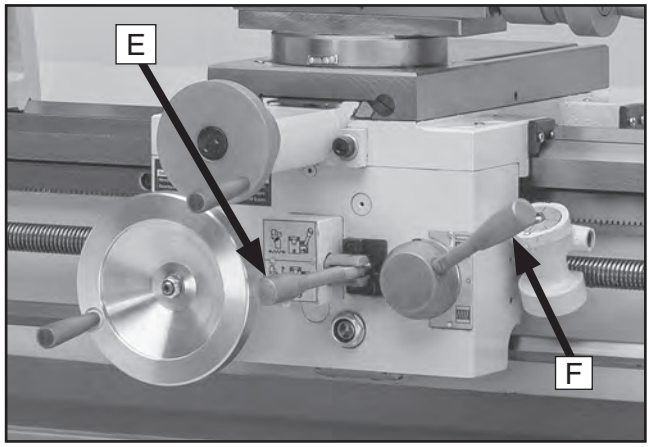

Figure 64. Apron power feed controls.

E. Feed Selection Lever: Changes power feed to either cross slide or carriage.

When lever is in left and down position, cross slide is selected. When lever is in right and up position, carriage is selected. In middle position, neither cross slide or carriage will move.

Note: *When using this lever, you may need to slightly rotate the handwheel of the component you are trying to engage, so that the apron gears can mesh.*

F. Half-Nut Selection Lever: Engages/disengages half nut for threading operations.

Setting Power Feed Rate

The feed rate chart displays settings for headstock feed controls for feed rates.

Using the controls on the lathe, follow along with the example below to better understand how to set up the lathe for the desired power feed rate.

Examining the chart, you will see a series of boxes separated by slashes. The top number is the carriage feed rate, the bottom number is the cross-slide feed rate, as shown in **Figure 65**.

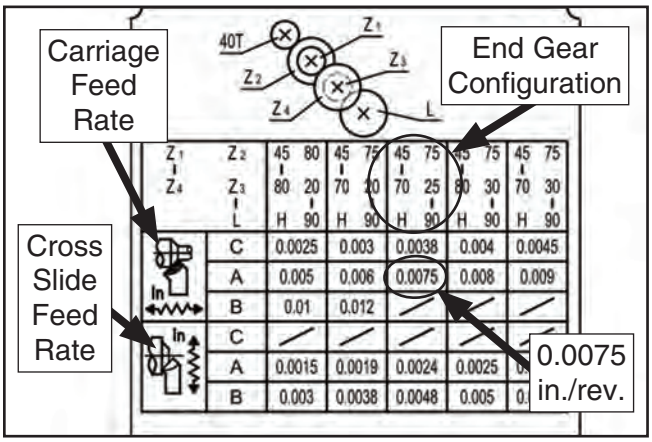

Figure 65. Location of 0.0075 in./rev. on feed chart.

Using the controls on the lathe, follow along with the example below to better understand how to set the lathe for the desired power feed rate.

To set power feed rate of 0.0075 in./rev:

1. Locate cell on feed rate chart that lists 0.0075 in./rev., as shown in **Figure 66**.

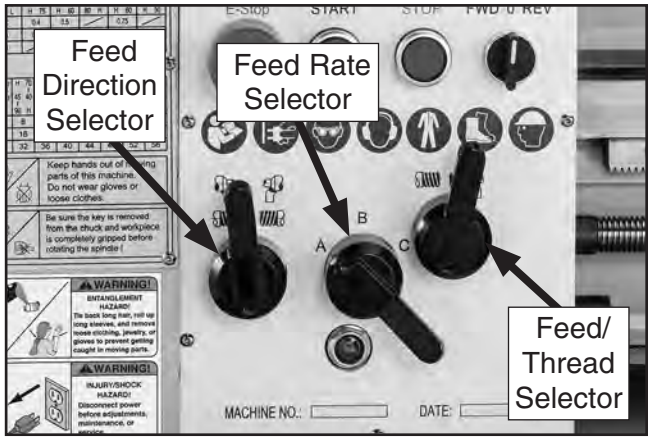

Figure 66. Feed rate levers positioned for 0.0075 in./rev.

2. Locate the applicable positions for feed direction selector, feed rate selector, and feed/thread selector.

3. Locate end gear configuration callout, and position end gears in correct configuration, as shown on feed rate chart. For this configuration install a 45T gear in Z1 position and mesh it with a 70T gear at Z4 position. Install a 75T gear in Z2 position and mesh it with 25T gear at Z3 position.

   Note: *The L gear is always 90T in power feed configuration.*

4. Move selector levers to correct positions: feed direction selector to left, feed rate selector to position "A", and feed/thread selector to right (feed setting), as shown in **Figure 66**.

5. Move leadscrew feed rod selection lever up. The carriage is now set up for a power feed rate of 0.0075 in./rev.

End Gears

The following subsections explain how to configure the end gears. The gears must be configured according to the feed and threading charts in order to perform specific power feed and threading operations (see **Figure 67**).

To set the gears up properly, according to the particular gears and positions shown in the charts, you need a basic understanding of gear positioning on the lathe and how this is represented in the chart illustrations. In **Figure 67**, identify the following:

—40T gear
—Z1 & Z2 (outer & inner) combination gear
—Z3 & Z4 (inner & outer) combination gear
—L gear

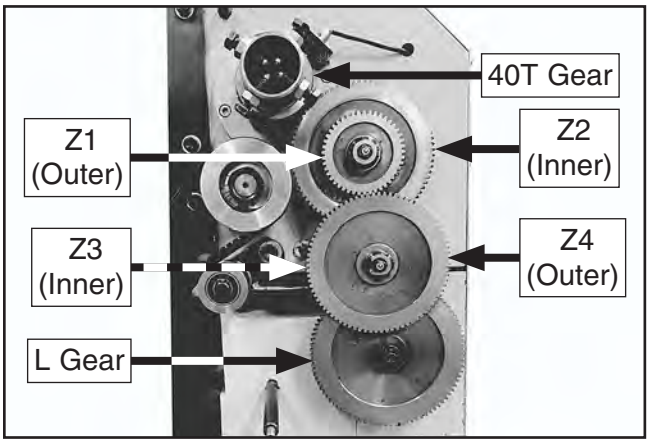

Figure 67. End gear identification.

The following subsections explain how to configure the end gears, which are accessed by removing the end-gear cover on the side of the headstock.

Power Feed Configuration

Gear selection depends upon which feed speed is selected (see **Figure 68**). To complete a power feed configuration, install a 75T or 80T gear in Z2 position, a 45T gear in Z1 position, a 20T, 25T, or 30T gear in Z3 position, and a 70T or 80T gear in Z4 position. Install a 90T gear in L position. Mesh gears together and secure in place (see **Figures 69–70**).

Note: *The L gear is always a 90T in power feed configuration.*

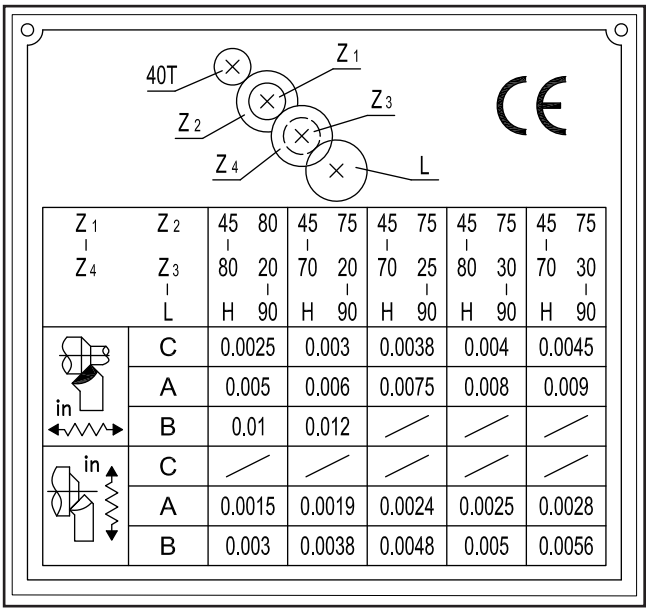

Z1 – Z4 / Z2 – Z3 / L	45 – 80 / 80 – 20 / H – 90	45 – 75 / 70 – 20 / H – 90	45 – 75 / 70 – 25 / H – 90	45 – 75 / 80 – 30 / H – 90	45 – 75 / 70 – 30 / H – 90
in C	0.0025	0.003	0.0038	0.004	0.0045
in A	0.005	0.006	0.0075	0.008	0.009
in B	0.01	0.012	—	—	—
in C	—	—	—	—	—
in A	0.0015	0.0019	0.0024	0.0025	0.0028
in B	0.003	0.0038	0.0048	0.005	0.0056

Figure 68. Power feed chart.

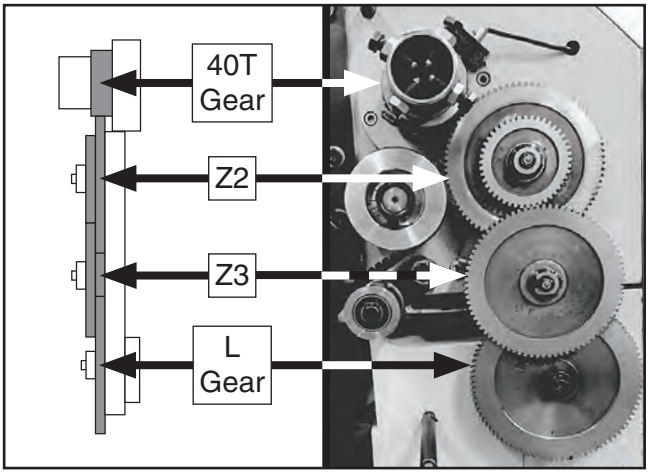

Figure 69. Power feed inner gear identification.

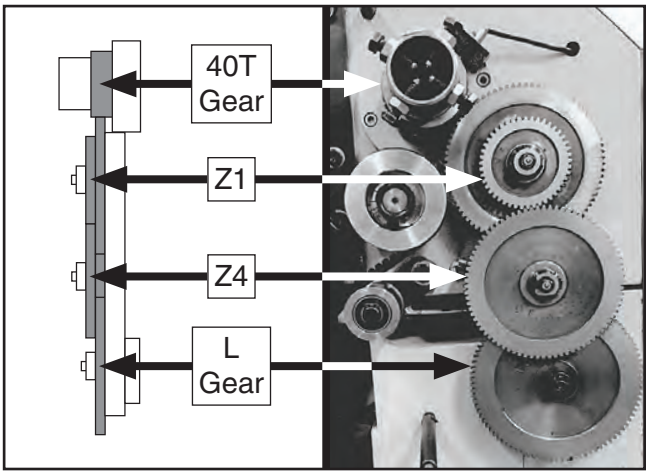

Figure 70. Power feed outer gear identification.

Inch Threading Configuration

Install a spacer in the Z1 position, and install end gears in the Z2, Z3, Z4, and L positions. Mesh the Z2 gear with the Z3 gear, and mesh the Z4 gear with the L gear. Just like the Z1/Z2 and Z3/Z4 gears, the L gear can be installed in either the inner or outer position on the shaft. The "H" designation in the L row shown in the chart below indicates a spacer is to be installed in that position.

Loosen the mounting hardware necessary and adjust backlash to between 0.002"–0.004". Tighten the hardware once the adjustment is complete and the gears are meshed correctly. Set the feed rate selector to A, B, or C.

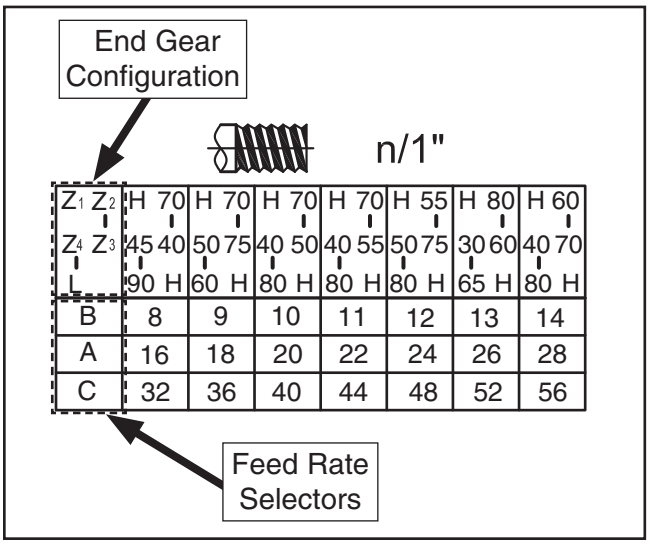

Z1 Z2 / Z4 Z3 / L	H 70 / 45 40 / 90 H	H 70 / 50 75 / 60 H	H 70 / 40 50 / 80 H	H 70 / 40 55 / 80 H	H 55 / 50 75 / 80 H	H 80 / 30 60 / 65 H	H 60 / 40 70 / 80 H
B	8	9	10	11	12	13	14
A	16	18	20	22	24	26	28
C	32	36	40	44	48	52	56

Figure 71. Inch TPI threading configuration.

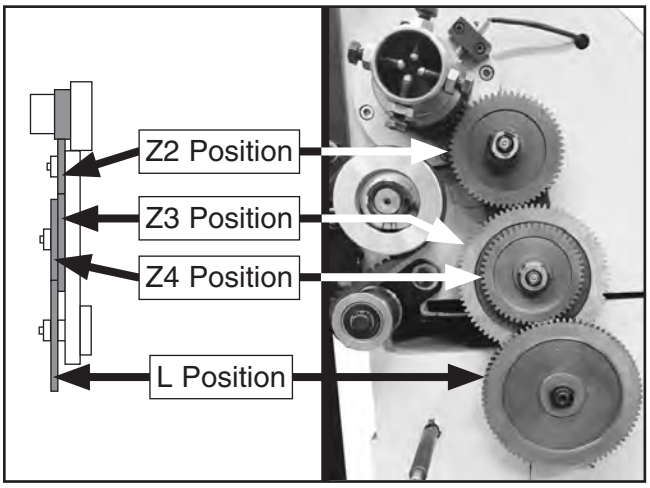

Figure 72. Inch end gear configuration.

Metric Threading Configuration

Install a spacer or an end gear in the Z1 and L positions, as applicable. Install end gears in the Z2, Z3, and Z4 positions. Mesh the Z1 gear with the Z4 gear, and mesh the Z3 gear with the L gear, as applicable. Or mesh the Z2 gear with the Z3 gear, and mesh the Z4 gear with the L gear, as applicable. Just like the Z1/Z2 and Z3/Z4 gears, the L gear can be installed in either the inner or outer position on the shaft. The "H" designation in the L row shown in the chart below indicates a spacer is to be installed in that position.

Loosen the mounting hardware necessary and adjust backlash to between 0.002"–0.004". Tighten the hardware once the adjustment is complete and the gears are meshed correctly. Set the feed rate selector to A, B, or C.

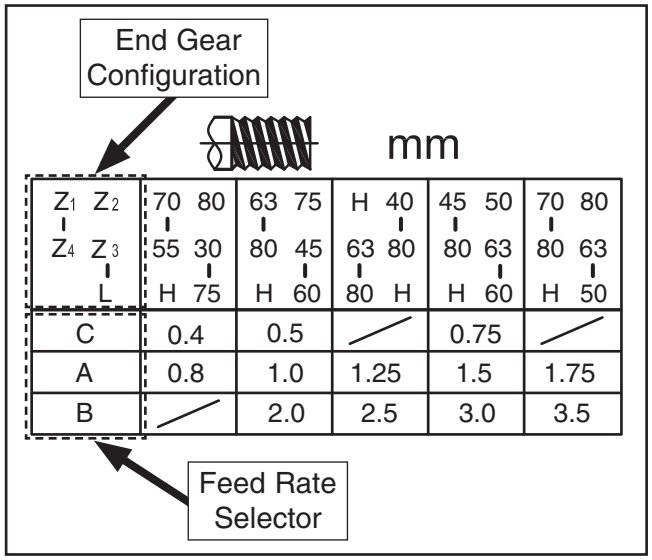

Z_1 Z_2 / Z_4 Z_3 / L	70 80 / 55 30 / H 75	63 75 / 80 45 / H 60	H 40 / 63 80 / 80 H	45 50 / 80 63 / H 60	70 80 / 80 63 / H 50
C	0.4	0.5	⁄	0.75	⁄
A	0.8	1.0	1.25	1.5	1.75
B	⁄	2.0	2.5	3.0	3.5

Figure 73. Metric TPI threading configuration.

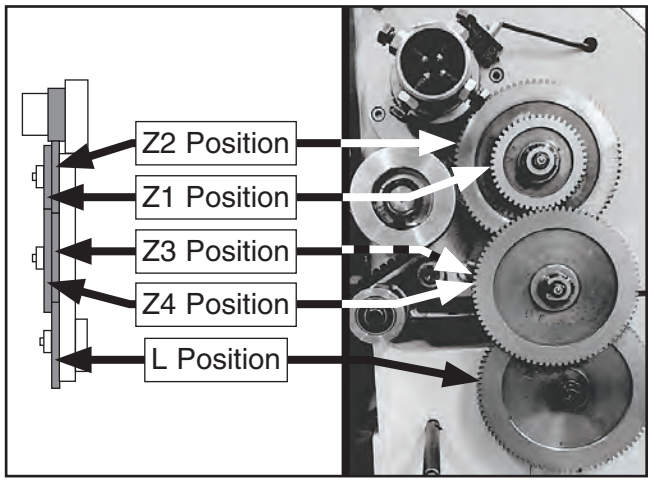

Figure 74. Metric feed chart end gears.

End-Gear Configuration Example

Follow the example below to better understand how to read the gear charts and configure the end gears accordingly.

Tools Needed	**Qty**
Hex Wrench 5mm	1
Open-End Wrench 5mm	1

To configure end gears for threading 22 TPI:

1. Locate 22 TPI on inch thread chart, then look at numbers provided at the top of column. These are end gears that need to be used in 22 TPI configuration. Note the feed rate selector setting (see **Figure 75**).

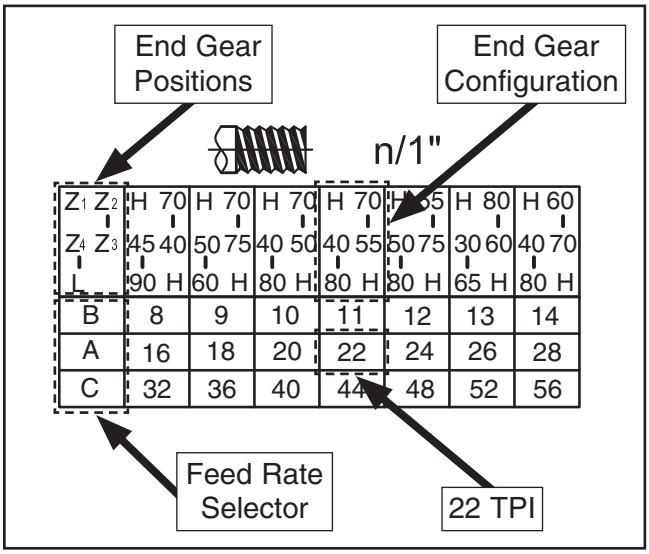

Z_1 Z_2 / Z_4 Z_3 / L	H 70 / 45 40 / 90 H	H 70 / 50 75 / 60 H	H 70 / 40 50 / 80 H	H 70 / 40 55 / 80 H	H 65 / 50 75 / 80 H	H 80 / 30 60 / 65 H	H 60 / 40 70 / 80 H
B	8	9	10	11	12	13	14
A	16	18	20	22	24	26	28
C	32	36	40	44	48	52	56

Figure 75. 22 TPI threading configuration.

2. DISCONNECT MACHINE FROM POWER!

3. Remove end-gear cover.

4. Collect 70T, 40T, 55T, and 80T end gears.

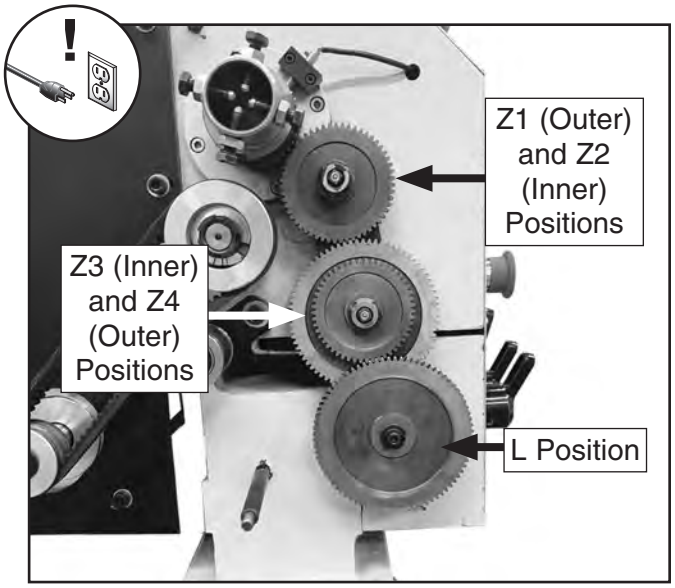

Figure 76. End gear placement.

5. Install 80T gear on L shaft.

6. Install 55T gear on Z3/Z4 shaft in Z3 position.

7. Install 40T gear on Z3/Z4 shaft in Z4 position.

8. Install 70T gear on Z1/Z2 shaft in Z2 position.

9. Install 40T gear on Z3/Z4 shaft in Z4 position.

10. Loosen mounting hardware necessary and adjust backlash to between 0.002"–0.004". Tighten hardware once adjustment is complete and gears are meshed correctly.

11. Re-install end gear cover.

Threading

The following subsections will describe how to use the threading controls and charts to set up the lathe for a threading operation. If you are unfamiliar with the process of cutting threads on a lathe, we strongly recommend that you read books, review industry trade magazines, or get formal training before attempting any threading projects.

Headstock Threading Configuration

The threading charts on the headstock face (see **Figure 77**) display settings for inch and metric threading.

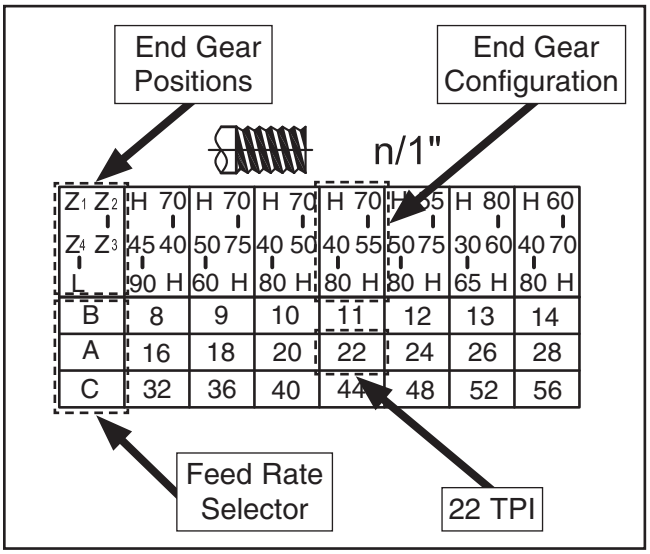

Figure 77. 22 TPI threading configuration.

Using the controls on the lathe, follow the example below to understand how to set up the lathe for the desired threading operation.

To set levers for 22 TPI:

1. Locate **22** TPI on inch threading chart shown in **Figure 78**.

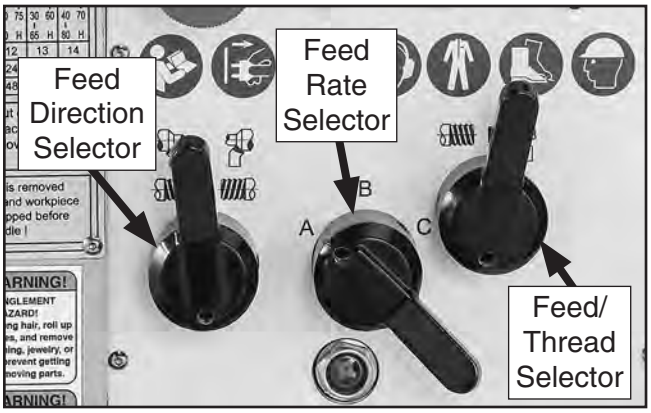

Figure 78. Feed direction and feed/thread selector settings for 22 TPI.

2. Install gears as instructed in **End-Gear Configuration Example** on **Page 53**.

3. On inch thread chart, locate correct position of feed rate selector. Shift lever to position **A**, as shown in **Figure 78**.

4. Position feed direction selector to left, and feed/thread selector to right, as shown in **Figure 78**.

The lathe is now set up to cut 22 TPI threads.

Apron Threading Configuration

The half nut lever engages the carriage with the leadscrew, which moves the carriage and cutting tool along the length of the workpiece for threading operations (see **Figure 79**).

IMPORTANT: Make sure the feed lever and feed selection lever are in the disengaged position before attempting to engage the half nut.

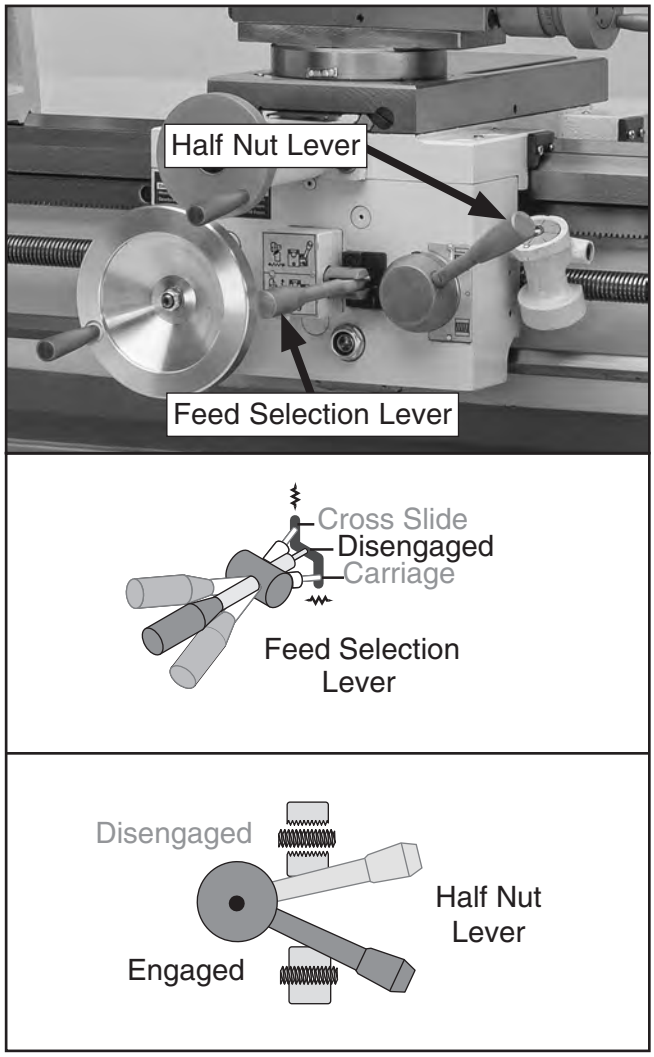

Figure 79. Apron threading controls.

Thread Dial

Tool Needed **Qty**

Open-End Wrench 14mm 1

The numbers on the thread dial are used with the thread dial chart to show when to engage the half nut during inch threading operations. Loosen the cap screw on the thread dial (see **Figure 80**), pivot the gear teeth so they mesh with the leadscrew threads, then tighten the cap screw.

Note: *You must leave the half nut engaged from the beginning until the turning is complete for this type of operation. The thread dial is not used for metric threading.*

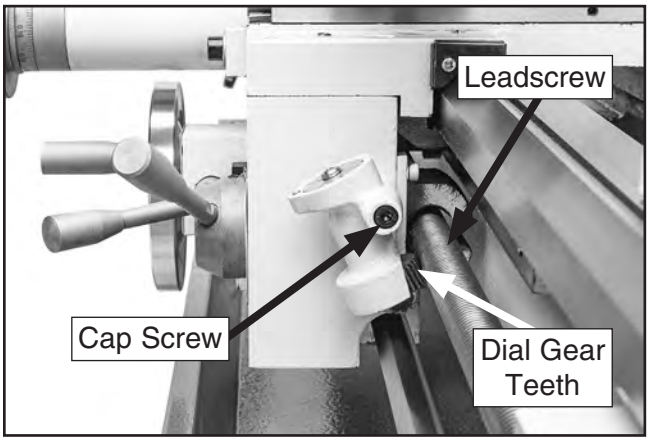

Figure 80. Thread dial engaged with leadscrew.

NOTICE

When threading, we recommend using the slowest speed possible and avoiding deep cuts so you are able to disengage the half nut when required and prevent an apron crash!

When the first thread cutting pass is complete, the operator disengages the carriage from the leadscrew using the half nut lever. The operator returns the carriage for the next pass and re-engages the half nut using the same thread dial setting to resume the cut in the previous pass.

Thread Dial Chart

The thread dial chart is located on the backsplash, as shown in **Figure 81**.

Figure 81. Thread dial chart location.

To use the thread chart, find the TPI (threads per inch) that you want to cut in the left column on the thread dial chart (see **Figure 82**), then reference the dial number to the right. The dial numbers indicate when to engage the half nut for a specific thread pitch as indicated by the thread dial.

THREAD DIAL

T.P.I.	DIAL
8 10 12	1 - 8
14 16 18	1 - 8
20 22 24	1 - 8
26 28 32	1 - 8
36 40 44	1 - 8
48 52 56	1 - 8
9 11 13	1、3、5、7

Figure 82. Thread dial chart.

The following examples explain how to use the thread dial and thread dial chart.

TPI Divisible by even number: Half-nut can be engaged when thread dial is on any of the eight marks.

TPI Divisible by odd number: Half-nut can only be engaged on odd numbers (1, 3, 5, and 7) of the dial (see **Figure 83**).

TPI	Dial Number	Thread Dial
9,11,13	Numbered Positions 1, 3, 5, 7	1 3 5 7

Figure 83. Example of an odd numbered inch thread pitch.

SECTION 5: ACCESSORIES

⚠WARNING

Installing unapproved accessories may cause machine to malfunction, resulting in serious personal injury or machine damage. To reduce this risk, only install accessories recommended for this machine by Grizzly.

NOTICE

Refer to our website or latest catalog for additional recommended accessories.

T23962—ISO 68 Moly-D Way Oil, 5 Gal.
T23963—ISO 32 Moly-D Machine Oil, 5 Gal.
Moly-D oils are some of the best we've found for maintaining the critical components of machinery because they tend to resist run-off and maintain their lubricity under a variety of conditions—as well as reduce chatter or slip. Buy in bulk and save with 5-gallon quantities.

Figure 84. ISO 68 and ISO 32 machine oil.

T26419—Syn-O-Gen Multi-Purpose Grease
Syn-O-Gen Multi-purpose Synthetic Grease is formulated with 100% pure synthesized hydrocarbon base stocks to impart its remarkable properties.

Figure 85. Model T26419 Syn-O-Gen Grease.

SBCE3450—How to Run a Lathe Book
First printed in 1907 by South Bend Lathe, this 56th edition is an exact reprint from 1966. Well illustrated with vintage photos and drawings, this 128-page book is written specifically about the care and operation of a metal lathe.

Figure 86. SBCE3450 South Bend Lathe~How to Run a Lathe book.

H7617—High Pressure Oil Can, 5 Oz. With Flex Nozzle
Whether you're lubricating cutting tools or maintaining machinery in top operating condition, you'll appreciate this High Pressure Oil Can. The H7617 holds 5 ounces of oil and has a trigger activated, high pressure pump.

Figure 87. Model H7617 High-Pressure Oil Can w/Flex Nozzle.

Basic Eye Protection

T32323—Woodturners Face Shield
T32401—EDGE Brazeau Safety Glasses, Clear
T32402—EDGE Khor G2 Safety Glasses, Tint
T32404—EDGE Mazeno Safety Glasses, Clear

Figure 88. Assortment of basic eye protection.

T10295—7-Pc. Indexable-Carbide Turning Tool Set

This ⅝" 7-piece turning tool set is ideal for just about any project. Supplied with right-hand and left-hand turning/facing tool holders, the set is complemented with one threading and cut-off tool, too. Indexable inserts ensure cutting surfaces stay sharp.

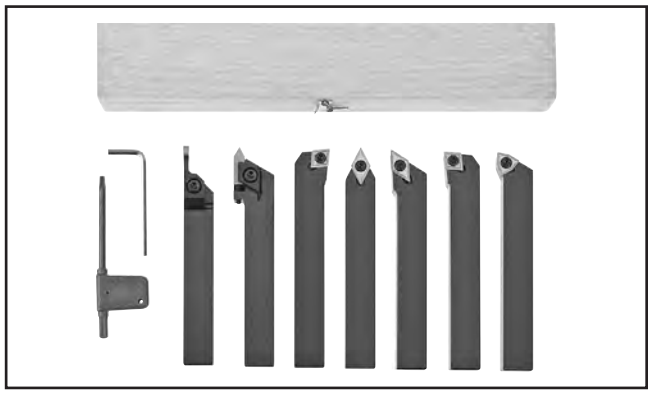

Figure 89. T10295 7-Pc. Indexable Carbide Tool Set.

T10439—4-Pc. Carbide Insert CCMT Boring Bar Set

These right-hand indexable solid steel boring bars use ¼" and ⅜", 80° diamond inserts and feature a negative 7° end and side cutting angle. Includes ⅜" x 6", ½" x 7", ⅝" x 8", and ¾" x 10" boring bars. Set comes with Torx® wrenches and fitted aluminum case with handle.

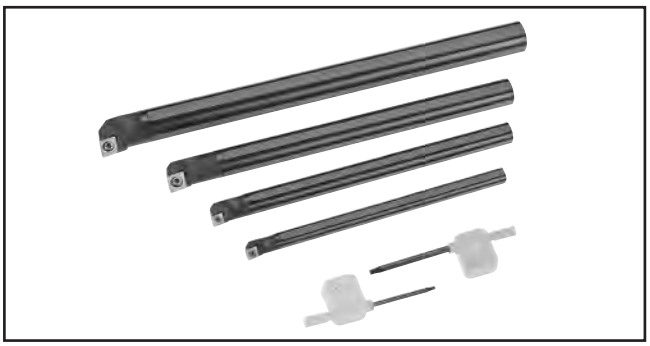

Figure 90. T10439 Carbide Insert CCMT Boring Bar Set.

G9849—Magnetic Base/Dial Indicator Combo

Magnetic base engages with the turn of a switch and allows pinpoint adjustment. The dial indicator features 0–1" travel and has a resolution of 0.001". Set includes a molded case for protection and convenience.

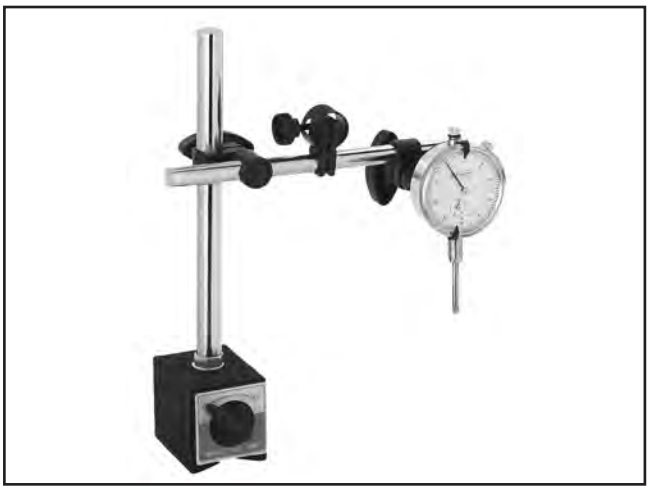

Figure 91. G9849 Magnetic base/dial indicator combo.

SECTION 6: MAINTENANCE

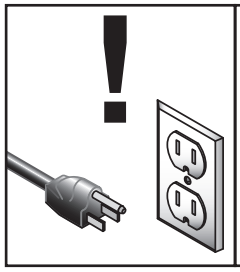

⚠WARNING

To reduce risk of shock or accidental startup, always disconnect machine from power before adjustments, maintenance, or service.

Schedule

For optimum performance from this machine, this maintenance schedule must be strictly followed.

Ongoing

To minimize your risk of injury and maintain proper machine operation, shut down the machine immediately if you ever observe any of the items below, and fix the problem before continuing operations:

- Loose mounting bolts or fasteners.
- Worn, frayed, cracked, or damaged wires.
- Guards or covers removed.
- E-Stop button not working correctly or not requiring you to reset it before starting the machine again.
- Oil level not visible in the sight glasses.
- Damaged or malfunctioning components.

Daily, Before Operations

- Check/add headstock oil (**Page 60**).
- Check/add gearbox oil (**Page 61**).
- Check/add apron oil (**Page 62**).
- Add oil to the ball oilers (**Page 63**).
- Clean/lubricate the leadscrew (**Page 63**).
- Disengage the feed lever and feed selection lever on the apron (to prevent crashes upon startup).
- Ensure carriage lock bolt is loose.

Daily, After Operations

- Press the E-Stop button (to prevent accidental startup).
- Vacuum/clean all chips and swarf from bed, slides.
- Wipe down all unpainted or machined surfaces with an oiled rag.

Every 50 Hours

- Lubricate end gears (**Page 64**).

Every 1000 Operating Hours

- Change the headstock oil (**Page 60**).
- Change the gearbox oil (**Page 61**).
- Change the apron oil (**Page 62**).

Annually

- Check/level bedway (**Page 24**).

Cleaning/Protecting

Because of its importance, we recommend that the cleaning routine be planned into the workflow schedule.

Typically, the easiest way to clean swarf from the machine is to use a wet/dry shop vacuum that is dedicated for this purpose. The small chips left over after vacuuming can be wiped up with a slightly oiled rag. Avoid using compressed air to blow off chips, as this may drive them deeper into the moving surfaces or cause sharp chips to fly into your face or hands.

All unpainted and machined surfaces should be wiped down daily to keep them rust free and in top condition. This includes any surface that is vulnerable to rust if left unprotected (especially parts that are exposed to water soluble cutting fluid). Use a quality ISO 68 way oil (see **Page 57** for offerings from Grizzly) to prevent corrosion.

Lubrication

Use the information in the charts below as a daily guide for lubrication tasks. We recommend using Grizzly T23962 (ISO 68) or T23963 (ISO 32) lubricants (see ***Accessories*** on ***Page 57***) for most of the lubrication tasks.

Lubrication Frequency

Lubrication Task	Frequency	Page Ref.
Headstock	Daily	**on this page**
Gearbox	Daily	**61**
Apron	Daily	**62**
Bedways	Daily	**63**
Longitudinal Leadscrew	Daily	**63**
Ball Oilers	Daily	**63**
End Gears	Every 50 Hours	**64**

Lubrication Amount & Type

Lubrication Task	Oil Type	Amount
Headstock	ISO 32	**27 oz.**
Gearbox	ISO 68	**13.5 oz.**
Apron	ISO 68	**6.75 oz.**
Bedways	ISO 68	**As Needed**
Longitudinal Leadscrew	ISO 68	**As Needed**
Ball Oilers	ISO 32	**1–2 Squirts**
End Gears	NLGI #2	**Dab**

Items Needed **Qty**
Open-End Wrenches 8, 13, 14, 24mm .....1 Ea.
Two-Quart Catch Pan 1
Pump-Type Oil Can w/Plastic Cone Tip 1
Stiff Brush 1
Mineral Spirits 1

NOTICE

The recommended lubrication is based on light-to-medium usage. Keeping in mind that lubrication helps to protect the value and operation of the lathe, these lubrication tasks may need to be performed more frequently than recommended here, depending on usage.

Failure to follow reasonable lubrication practices as instructed in this manual could lead to premature failure of lathe components and will void the warranty.

Headstock

Oil Type .... Grizzly T23963 or ISO 32 Equivalent
Oil Amount.....27 Ounces
Check/Add Frequency ..... Daily
Change ..... Every 1000 Operating Hours

The headstock gearing is lubricated by an oil bath that distributes the lubricant with the motion of the gears, much like an automotive manual transmission. Change the oil after the first 300 hours of use, then every 1000 hours.

Checking Oil Level
The headstock reservoir has the proper amount of oil when the oil level in the sight glass is approximately halfway. The oil sight glass is located on the on the lower left side of the headstock, as shown in **Figure 92**.

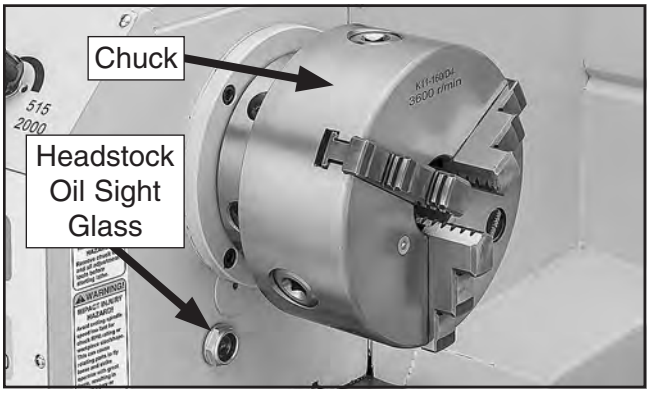

Figure 92. Location of headstock oil sight glass.

Adding Oil

The oil fill plug is located on top of the headstock, as shown in **Figure 93**. The oil drain plug is located on the side of the headstock, behind the end gear cover.

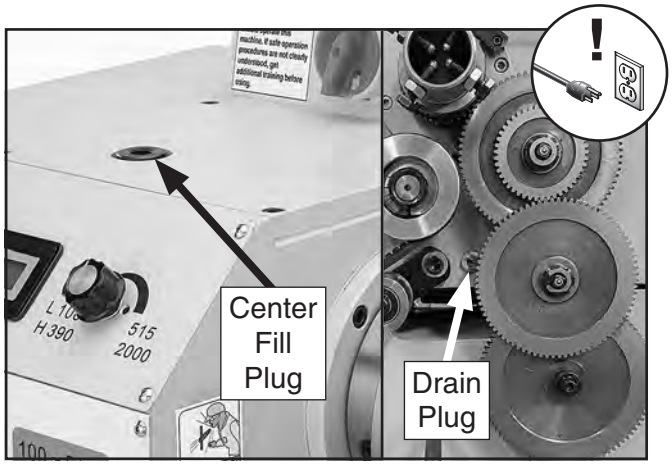

Figure 93. Headstock fill and drain plugs.

To change headstock oil:

1. DISCONNECT MACHINE FROM POWER!

2. Open end-gear cover.

3. Remove V-belts so that oil does not get on them, necessitating their replacement (refer to **Replacing V-Belts** on **Page 73** for detailed instructions).

4. Remove fill plug from top of headstock (see **Figure 93**).

5. Place two-quart catch pan under headstock drain plug (see **Figure 93**), then remove drain plug.

6. When headstock reservoir is empty, replace drain plug and clean away any spilled oil.

7. Fill headstock reservoir until oil level is approximately halfway in sight glass.

8. Replace and re-tension V-belts (refer to **Replacing V-Belts** on **Page 73**), then close end-gear cover before re-connecting lathe to power.

Gearbox

Oil Type .... Grizzly T23962 or ISO 68 Equivalent
Oil Amount.....13.5 Ounces
Check/Add Frequency..... Daily
Change..... Every 1000 Operating Hours

Checking Oil Level

The gearbox reservoir has the proper amount of oil when the oil level in the sight glass (see **Figure 94**) is approximately halfway. The oil sight glass is located below the feed rate selector near the bottom of the control panel.

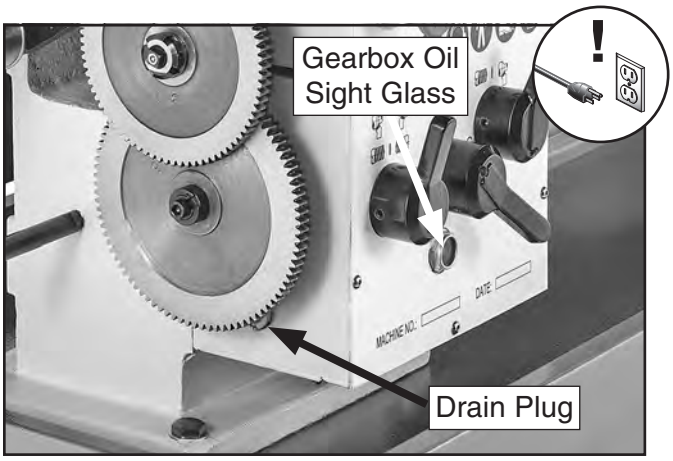

Figure 94. Location of gearbox oil sight glass and drain plug.

Adding Oil

The oil fill plug is located on the right side of the gearbox, behind the gearbox oil cover (see **Figure 95**). Change the gearbox oil after the first 300 hours of use, then after every 1000 hours of use.

Figure 95. Location of gearbox oil cover.

To change gearbox oil:

1. DISCONNECT MACHINE FROM POWER!

2. Remove gearbox oil cover (see **Figure 95** on **Page 60**).

3. Remove fill plug from side of gearbox (see **Figure 96**).

Figure 96. Gearbox fill plug.

4. Remove end gear cover.

5. Remove "L", Z3, and Z4 gears, then place a two-quart catch pan under drain plug.

6. Remove drain plug (see **Figure 94** on **Page 60**).

7. When reservoir is empty, replace drain plug and clean up any spilled oil.

8. Fill gearbox reservoir until oil level is approximately halfway in sight glass (see **Page 61** for gearbox oil capacity).

9. Replace oil gearbox fill plug and gearbox oil cover.

10. Install "L", Z3, and Z4 gears, then install end gear cover.

Apron

Oil Type .... Grizzly T23962 or ISO 68 Equivalent
Oil Amount.....6.75 Ounces
Check/Add Frequency..... Daily
Change..... Every 1000 Operating Hours

Checking Oil Level

The apron oil sight glass is on the front of the apron, as shown in **Figure 97**. Maintain the oil volume so that the level is approximately halfway in the sight glass.

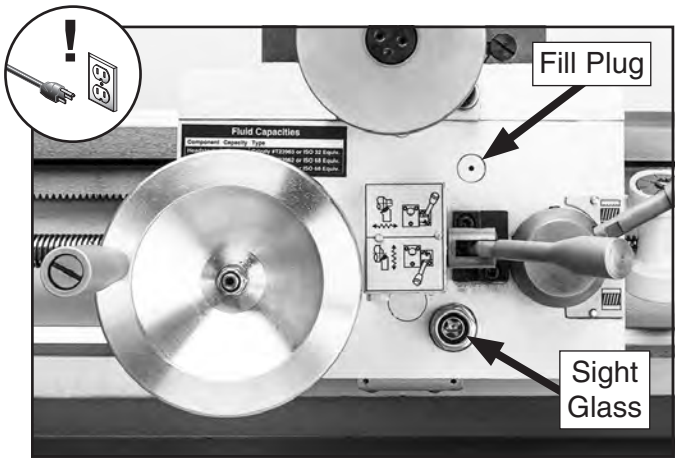

Figure 97. Location of apron oil sight glass.

Changing Oil & Flushing Reservoir

Small metal particles may accumulate at the bottom of the reservoir with normal use. Therefore, to keep the reservoir clean, drain and flush it after the first 300 hours, then after every 1000 hours.

Place a catch pan under the apron drain plug shown in **Figure 98**, then remove the fill plug and drain plug, and empty the reservoir.

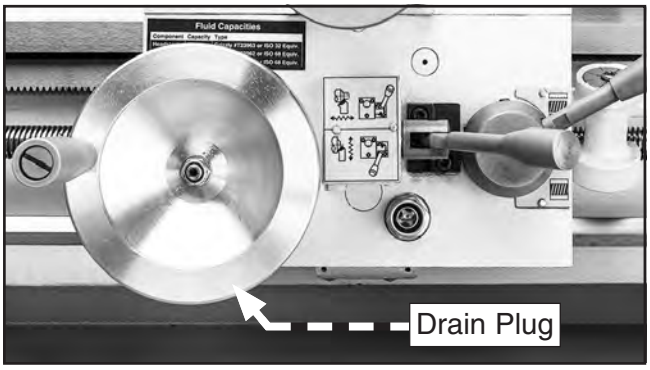

Figure 98. Location of apron drain plug.

Flush the reservoir by pouring a small amount of clean oil into the fill hole and allowing it to drain out the bottom. Replace the drain plug, add oil as previously described, then re-install the fill plug.

Bedways

Oil Type ..... T23962 or ISO 68 Equivalent
Oil Amount..... As Needed
Lubrication Frequency ..... Daily

Before lubricating the bedways (see **Figure 99**), clean them with mineral spirits. Apply a thin coat of oil along the length of the bedway. Move the steady rest, carriage, and tailstock to access the entire length of the bedways. If the lathe is in a moist or dirty environment, increase the lubrication frequency.

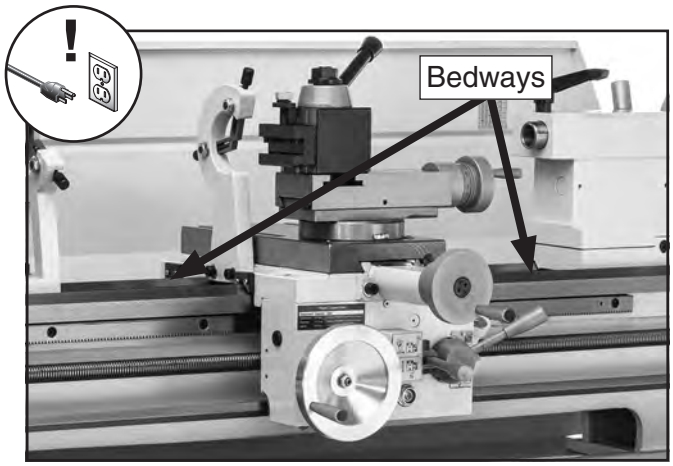

Figure 99. Bedways.

Longitudinal Leadscrew

Oil Type .... Grizzly T23962 or ISO 68 Equivalent
Oil Amount..... As Needed
Lubrication Frequency ..... Daily

Before lubricating the leadscrew (see **Figure 102** on **Page 64**), clean it first with mineral spirits. A stiff brush works well to help clean out the threads. Make sure to move the carriage out of the way, so you can clean the entire length of the leadscrew.

Apply a thin coat of oil along the length of the leadscrew. Use a stiff brush to make sure the oil is applied evenly and down into the threads.

Note: *In some environments, abrasive material can become caught in the leadscrew lubricant and drawn into the half nut. In this case, lubricate the leadscrew with a quality dry lubricant.*

Ball Oilers

Oil Type .... Grizzly T23963 or ISO 32 Equivalent
Oil Amount.....1 or 2 Squirts
Lubrication Frequency ..... Daily

This lathe has 16 ball oilers that should be oiled on a daily basis before beginning operation. Refer to **Figures 100–103** for their locations.

Ball Oilers

Proper lubrication of ball oilers is done with a pump-type oil can that has a plastic or rubberized cone tip. We do not recommend using metal needle or lance tips, as they can push the ball too far into the oiler, break the spring seat, and lodge the ball in the oil galley.

Lubricate the ball oilers before and after machine use, and more frequently under heavy use. When lubricating ball oilers, first clean the outside surface to remove any dust or grime. Push the rubber or plastic tip of the oil can nozzle against the ball oiler to create a hydraulic seal, then pump the oil can once or twice. If you see sludge and contaminants coming out of the lubrication area, keep pumping the oil can until the oil runs clear. When finished, wipe away any excess oil.

A. Saddle, cross-slide, compound rest
B. Handwheels
C. Leadscrew
D. Feed rod
E. Tailstock

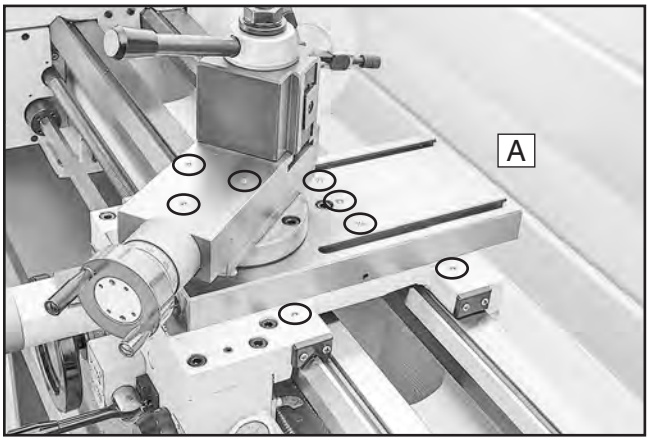

Figure 100. Saddle, slide and rest ball oilers.

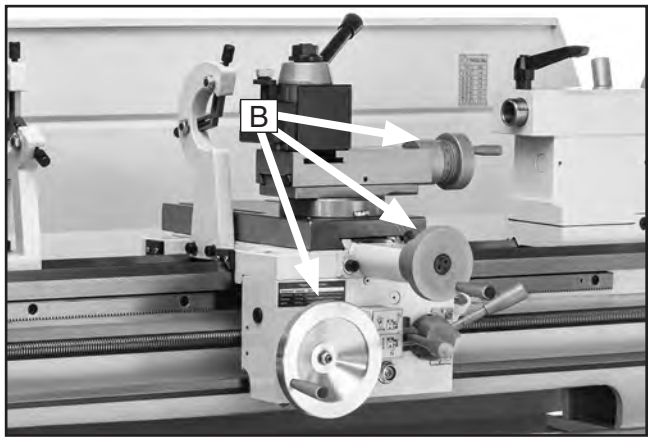

Figure 101. Handwheel ball oilers.

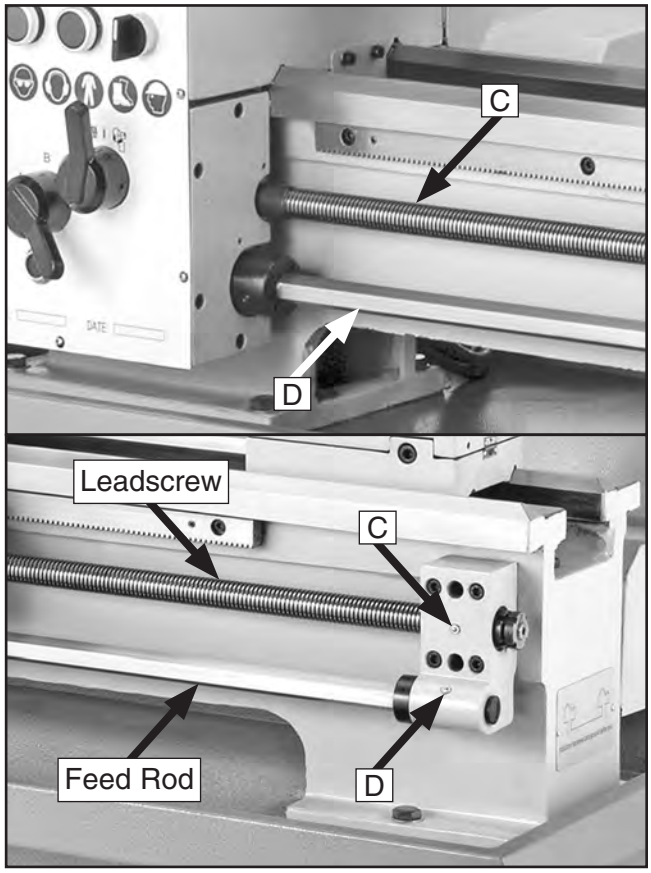

Figure 102. Leadscrew/feed rod ball oilers.

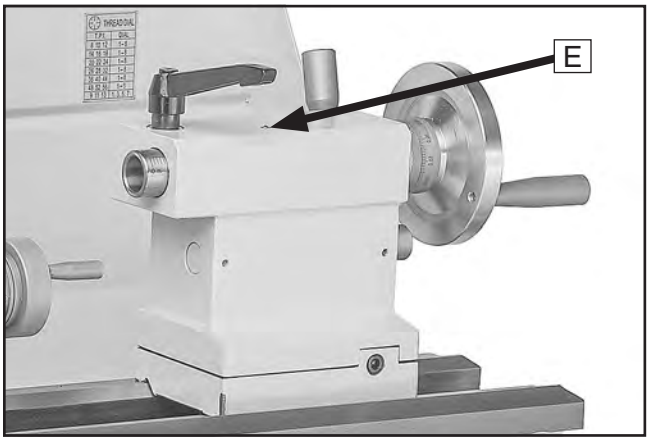

Figure 103. Tailstock ball oiler.

End Gears

Grease Type..... T26419 or NLGI#2 Equivalent
Lubrication..... Every 50 Operating Hours

The end gears, shown in **Figure 104**, should always have a thin coat of heavy grease to minimize corrosion, noise, and wear. Wipe away excess grease that could be thrown onto the V-belt and reduce optimal power transmission from the motor.

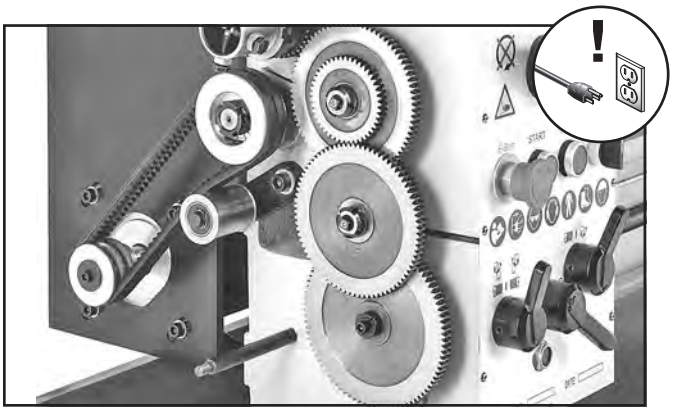

Figure 104. End gears.

Handling & Care

Make sure to clean and lubricate any gears you install or change. Be very careful during handling and storage—the grease coating on the gears will easily pickup dirt or debris, which can then spread to the other gears and increase the rate of wear.

Make sure the end-gear cover remains closed whenever possible to keep the gears free of dust or debris from the outside environment.

Lubricating

1. DISCONNECT MACHINE FROM POWER!

2. Remove end-gear cover and remove all end gears shown in **Figure 104** on **Page 64.**

3. Clean end gears thoroughly with mineral spirits to remove old grease. Use a small brush if necessary to clean between teeth.

4. Clean shafts, and wipe away any grease splatters in the vicinity and on inside of the end-gear cover.

5. Using clean brush, apply thin layer of grease on gears. Make sure to get grease between gear teeth, but do not fill teeth valleys.

6. Install end gears and mesh them together with an approximate 0.002"–0.004" backlash. Once gears are meshed together, apply small dab of grease between them where they mesh together—this grease will be distributed when gears rotate and recoat any areas scraped off during installation.

7. Re-install end-gear cover before reconnecting lathe to power.

Machine Storage

To prevent the development of rust and corrosion, the lathe must be properly prepared if it will be stored for a long period of time. Doing this will ensure the lathe remains in good condition for later use.

Preparing Lathe for Storage

1. Run lathe and bring all reservoirs to operating temperature, then drain and refill them with clean oil.

2. DISCONNECT MACHINE FROM POWER!

3. Thoroughly clean all unpainted, bare metal surfaces, then apply a liberal coat of way oil, heavy grease, or rust preventative. Take care to ensure these surfaces are completely covered but that rust preventative or grease is kept off of painted surfaces.

4. Lubricate machine as outlined in the lubrication section. Be sure to use an oil can to purge all ball oilers and oil passages with fresh oil.

5. Place a few moisture absorbing desiccant packs inside of electrical box.

6. Loosen or remove V-belt so it does not become stretched during the storage period. (Be sure to place a maintenance note near power button as a reminder that belt has been loosened or removed).

7. Cover lathe and place it in a dry area that is out of direct sunlight and away from hazardous fumes, paint, solvents, or gas. Fumes and sunlight can bleach or discolor paint.

8. Every few months, rotate by hand all gear-driven components a few times in several gear selections. This will keep bearings, bushings, gears, and shafts well lubricated and protected from corrosion—especially during the winter months.

9. Slide carriage, tailstock, and steady rest down lathe bed to make sure that way spotting is not beginning to occur.

Bringing Lathe Out of Storage

1. Re-install V-belt and tension it (refer to **Page 73**) if you removed it for storage purposes.

2. Remove moisture-absorbing desiccant packs from electrical box.

3. Repeat **Test Run** and **Spindle Break-In** procedures, beginning on **Pages 25** & **28**.

SECTION 7: SERVICE

Review the troubleshooting procedures in this section if a problem develops with your machine. If you need replacement parts or additional help with a procedure, call our Technical Support. **Note:** *Please gather the serial number and manufacture date of your machine before calling.*

Troubleshooting

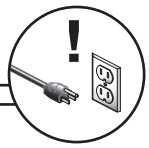

Motor & Electrical

Symptom	Possible Cause	Possible Solution
Machine does not start, or power supply breaker immediately trips after startup.	1. Master power switch in OFF position. 2. E-Stop button depressed/at fault. 3. Blown fuse. 4. Incorrect power supply voltage or circuit size. 5. Motor speed potentiometer at fault. 6. Power supply circuit breaker tripped or fuse blown. 7. Motor wires connected incorrectly. 8. Wiring broken, disconnected, or corroded. 9. START button at fault. 10. Circuit board at fault. 11. Motor or motor bearings at fault.	1. Turn master power switch to ON position. 2. Rotate E-Stop button head to reset. Replace if at fault. 3. Replace fuse/ensure no shorts. 4. Ensure correct power supply voltage and circuit size. 5. Test/replace if at fault. 6. Ensure circuit is free of shorts. Reset circuit breaker or replace fuse. 7. Correct motor wiring connections (**Page 83**). 8. Fix broken wires or disconnected/corroded connections. 9. Replace START button. 10. Inspect/replace if at fault. 11. Replace motor.
Machine stalls or is underpowered.	1. Feed rate/cutting speed too fast. 2. Improper tooling or workpiece material. 3. Gearbox at fault. 4. Motor circuit board at fault. 5. Motor speed potentiometer at fault. 6. Belt(s) slipping/pulley(s) misaligned. 7. Motor wired incorrectly. 8. Pulley slipping on shaft. 9. Machine undersized for task. 10. Motor overheated. 11. Extension cord too long. 12. Motor or motor bearings at fault.	1. Decrease feed rate/cutting speed. 2. Use appropriate tooling and/or workpiece material. 3. Select appropriate gear ratio; replace broken or slipping gears. 4. Inspect and replace if at fault. 5. Test and replace if at fault. 6. Clean/tension/replace belt(s) (**Page 73**); ensure pulleys are aligned. 7. Wire motor correctly (**Page 83**). 8. Tighten/replace loose pulley/shaft. 9. Use sharp bits/chisels at correct angle; reduce feed rate/depth of cut; use cutting fluid if possible. 10. Clean motor, let cool, and reduce workload. 11. Move machine closer to power supply; use shorter extension cord. 12. Replace motor.

Operation

Symptom	Possible Cause	Possible Solution
Machine has vibration or noisy operation.	1. Motor or component loose. 2. Lathe Incorrectly mounted on stand. 3. V-belt(s) worn, loose, pulleys misaligned, or belt slapping cover. 4. Pulley loose. 5. Motor mount loose/broken. 6. Spindle loose, improperly installed or damaged. 7. Bit chattering. 8. Workpiece or chuck at fault. 9. Motor bearings at fault. 10. Gearbox at fault.	1. Replace damaged or missing bolts/nuts or tighten if loose. 2. Adjust feet, shim, or tighten mounting hardware. 3. Inspect/replace belt with a new belt (**Page 73**). Re-align pulleys if necessary. 4. Secure pulley on shaft. 5. Tighten/replace. 6. Tighten loose spindle, re-install spindle ensuring mating surfaces are clean, replace spindle if damaged. 7. Replace/sharpen bit; index bit to workpiece; use correct feed rate and cutting RPM. 8. Center workpiece in chuck or face plate; replace defective chuck. 9. Test by rotating shaft; rotational grinding/loose shaft requires bearing replacement. 10. Rebuild gearbox for bad gear(s)/bearing(s).
Entire machine vibrates upon startup and while running.	1. Workpiece unbalanced. 2. Workpiece hitting stationary object. 3. Loose or damaged V-belt(s). 4. V-belt pulleys not properly aligned. 5. Worn/broken gear or bad bearing. 6. Spindle bearings at fault.	1. Re-install workpiece as centered with spindle bore as possible. 2. Stop lathe immediately and correct interference problem. 3. Re-tension/replace V-belt(s) as necessary (**Page 73**). 4. Align V-belt pulleys. 5. Replace broken gear or bearing. 6. Reset spindle bearing preload or replace spindle bearings.
Bad surface finish.	1. Incorrect spindle speed or feed rate. 2. Dull tooling or wrong tool selection. 3. Workpiece deflecting. 4. Excessive play in gibs. 5. Material building up on cutting tool. 6. Bearing preload needs to be adjusted. 7. Belts bad. 8. Spindle bearings at fault. 9. Tool height not at center line.	1. Use correct spindle speed and feed rate. 2. Sharpen tooling; use correct tool for operation. 3. Change setup to properly support workpiece. 4. Tighten gibs (**Page 70**). 5. Use coolant on tool and workpiece during operation. 6. Adjust bearing preload (**Page 76**). 7. Replace belts (**Page 73**). 8. Replace spindle bearings. 9. Adjust tool height to center line.
Tapered tool difficult to remove from tailstock quill.	1. Quill not fully retracted into tailstock.	1. Rotate quill handwheel until it forces tapered tool out of quill.
Tapered tool will not lock in quill.	1. Debris not removed from tool taper before inserting into quill.	1. Remove debris from tapered tool before re-inserting into quill.
Cross slide, compound rest, or carriage feed has sloppy operation.	1. Gibs are out of adjustment. 2. Handwheel loose or has excessive backlash. 3. Leadscrew mechanism worn or out of adjustment.	1. Adjust gibs (**Page 70**). 2. Tighten handwheel fasteners or adjust handwheel backlash to a minimum (**Page 69**). 3. Adjust leadscrew to remove end play (**Page 72**).
Chuck jaws will not move or do not move easily.	1. Chips lodged in jaws or scroll plate. 2. Dent/ridge in jaw slot of chuck body.	1. Remove jaws, clean and lubricate scroll plate, then re-install jaws. 2. Stone or file off high spot in jaw slots.

Symptom	Possible Cause	Possible Solution
Spindle lacks turning power or starts up slowly.	1. Belts slipping.	1. Tighten belts (**Page 73**); inspect for oil/grease on belts and clean/replace as necessary.
Workpiece is tapered.	1. Spindle and tailstock centers not properly aligned with each other. 2. Lathe bed twisted.	1. Re-align tailstock to headstock spindle centerline (**Page 39**). 2. Level lathe (**Page 24**).
Gear change levers will not shift into position.	1. Gears not aligned inside headstock/Quick-Change gearbox.	1. Rotate spindle by hand with light pressure on the lever until gear falls into place.
Cross slide, compound, or carriage handwheels hard to move.	1. Ways dry and in need of lubricant. 2. Ways loaded with shavings, dust, or grime. 3. Gibs are too tight. 4. Backlash setting too tight.	1. Lubricate ways/ball oilers (**Page 63**). 2. Remove gibs, clean ways, lubricate, re-install, and re-adjust. 3. Loosen gibs slightly (**Page 70**), and lubricate ways. 4. Slightly loosen backlash setting (**Page 69**).
Cutting tool or machine components vibrate excessively during cutting.	1. Tool holder not tight enough. 2. Cutting tool sticks too far out of tool holder; lacks support. 3. Workpiece deflecting. 4. Workpiece unbalanced. 5. Gibs out of adjustment. 6. Cutting tool dull. 7. Spindle speed or feed rate incorrect.	1. Tighten tool holder. 2. Re-install cutting tool so no more than ⅓ of total length sticks out of tool holder. 3. Use steady or follow rest (**Pages 43–44**). 4. Balance workpiece. 5. Adjust gibs (**Page 70**). 6. Replace or resharpen cutting tool. 7. Use recommended spindle speed (**Page 48**) and feed rate (**Page 49**).
Carriage will not feed or hard to move.	1. Gears not all engaged. 2. Half nut lever engaged. 3. Carriage lock tightened down. 4. Chips loaded up on ways. 5. Ways dry and in need of lubrication. 6. Gibs too tight. 7. Shear pin broken.	1. Engage gears using gear levers. 2. Disengage half nut lever. 3. Make sure carriage lock is fully released. 4. Frequently clear away chips that load up during turning operations. 5. Lubricate ways/ball oilers (**Page 63**). 6. Loosen gib screw(s) slightly (**Page 70**). 7. Replace gears/shear pin (**Page 74**).
Workpiece slips in chuck.	1. Cutting pressure/feed rate too high. 2. Jaws worn or not installed properly.	1. Reduce cutting force. 2. Remove/re-install properly; turn jaws with cutting tool so they are concentric; replace jaws as matched set or chuck.

Backlash Adjustment

Backlash is the amount of play in a leadscrew and can be felt as the free play in a handwheel when changing direction of rotation. The amount of the backlash can be viewed on the handwheel graduated dial.

When adjusting backlash, tighten the components enough to remove backlash, but not so much that the components bind the leadscrew, making it hard to turn. Overtightening will cause excessive wear to the sliding block and leadscrew.

Tools Needed	Qty
Hex Wrenches 2, 5, 6mm	1 Ea.
Punch Pin 2mm	1

Cross Slide Backlash

1. Feed cross slide toward operator until it reaches end of its travel.

2. Remove cap screw that secures cross slide leadscrew nut (see **Figure 105**).

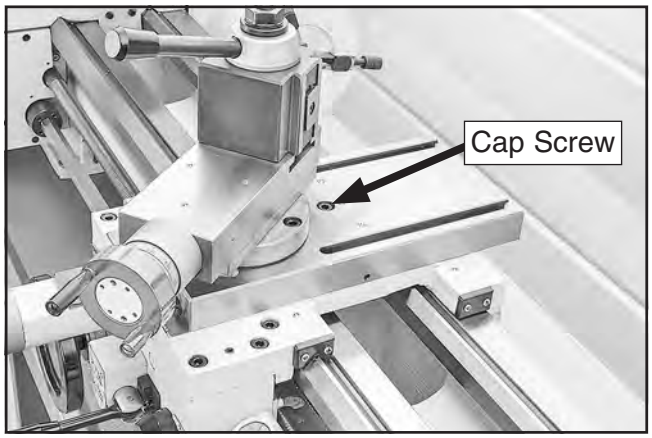

Figure 105. Location of cap screw that secures leadscrew nut.

NOTICE

Reducing backlash to less than 0.002" is impractical and can lead to accelerated wear of the wedge, nut, and leadscrew. Avoid the temptation to overtighten the backlash set screw while adjusting.

3. Rotate cross slide handwheel clockwise to feed leadscrew nut out from under cross slide, as shown in **Figure 106**.

4. Tighten backlash adjustment cap screw shown in **Figure 106** in small increments.

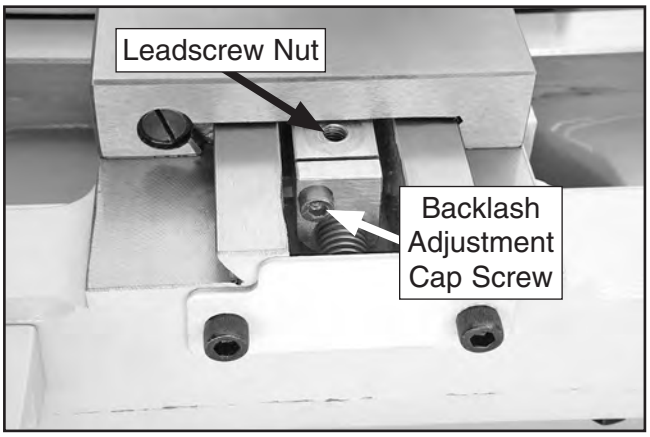

Figure 106. Cross slide leadscrew nut.

5. Hold leadscrew nut and test after each adjustment by rotating handwheel back-and-forth until backlash amount is approximately 0.002"–0.004".

6. Feed leadscrew nut back under cross slide and replace cap screw removed in **Step 2**.

Compound Rest Backlash

1. Turn compound rest handwheel counter-clockwise several turns.

2. Loosen set screws on compound rest face-plate several turns (see **Figure 107**).

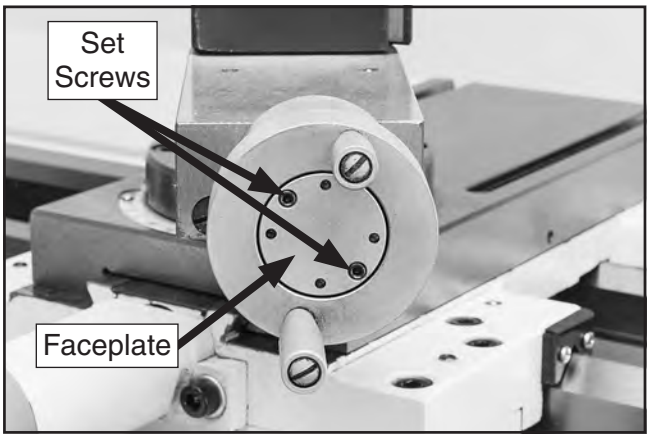

Figure 107. Compound rest backlash adjustments.

3. Use punch pin to loosen faceplate and adjust it until backlash is approximately 0.002"–0.004", as indicated on graduated dial.

4. Secure setting with set screws.

5. Repeat adjustments above if necessary.

Gib Adjustment

The goal of adjusting the gib screws is to remove sloppiness or "play" from the ways without over-adjusting them to the point where they become stiff and difficult to move.

In general, loose gibs cause poor finishes and tool chatter; however, over-tightened gibs cause premature wear and make it difficult to turn the handwheels.

The cross-slide and compound slide on this lathe each use a long steel wedge called a gib that is positioned between the component and its dove-tailed-ways. At the end of each gib is a gib screw, which moves and holds the gib. Depending upon which direction the gib moves, the space between the sliding ways increases or decreases to control the rigidity of the cross slide and compound slide.

Before adjusting the gibs, loosen the locks for the device so that the gibs can freely slide during adjustment, then lubricate the ways.

The gib adjustment process usually requires some trial-and-error. Repeat the adjustment process as necessary until you find the best balance between loose and stiff movement. Most machinists find that the ideal gib adjustment is one where a small amount of drag or resistance is present, yet the handwheels are still easy to move.

Tools Needed	**Qty**
Phillips Head Screwdriver #2	1
Hex Wrenches 3, 6mm	1
Open-End Wrench 10mm	1

Cross Slide Gib

Make sure the bedways and leadscrew have been cleaned and lubricated before any adjustments. Refer to **Lubrication** on **Page 60** for instructions and lubricant specifications.

To adjust cross slide gib:

1. DISCONNECT MACHINE FROM POWER!

2. Loosen locking set screw (see **Figure 108**).

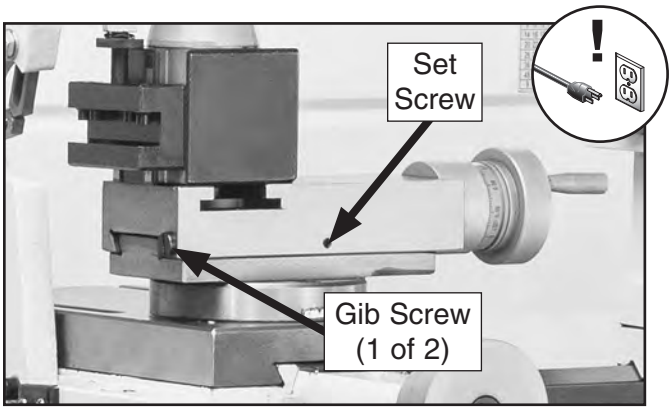

Figure 108. Cross slide gib components.

3. Adjust gib screws as follows:

   — To increase slide tension, loosen rear gib screw ⅛ turn, and tighten front gib screw ⅛ turn.

   — To decrease slide tension, loosen front gib screw ⅛ turn, and tighten rear gib screw ⅛ turn.

4. After each adjustment, use cross slide handwheel to test cross slide movement.

5. Repeat **Steps 3–4** until cross slide movement is acceptable.

Compound Rest Gib

The compound rest gib is located on the bottom of the back edge of the compound rest (see **Figure 109**). This gib is a wedge-shaped plate. The gib pressure is applied by two set screws.

When adjusting the compound rest be aware directions to increase or decrease the tension are reversed from cross slide gib.

1. DISCONNECT MACHINE FROM POWER!

2. Loosen locking set screw (see **Figure 109**).

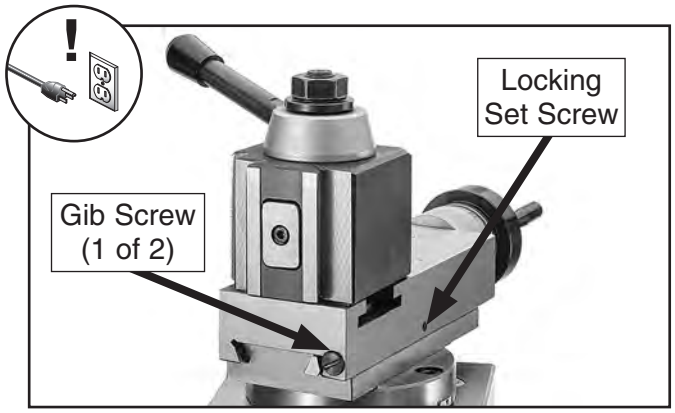

Figure 109. Compound rest gib components.

3. Adjust gib screws as follows:

— To increase slide tension, loosen rear gib screw ⅛ turn, and tighten front gib screw ⅛ turn.

— To decrease slide tension, loosen front gib screw ⅛ turn, and tighten rear gib screw ⅛ turn.

4. After each adjustment, use compound rest handwheel to test compound rest movement.

5. Repeat **Steps 3–4** until compound rest movement is acceptable.

Saddle Gib

The saddle gib is located on the bottom of the back edge of the cross slide (see **Figure 110**). This gib is designed differently than the cross or compound slide gibs. Instead of being a wedge-shaped plate, it is a flat bar. The gib pressure is applied by four set screws. Jam nuts secure these set screws in place, so they will not loosen during operation.

Figure 110. Saddle gib components.

Tools Needed	**Qty**
Open-End Wrenches 7, 10mm	1 Ea.

To adjust saddle gib:

1. DISCONNECT MACHINE FROM POWER!

2. Clean and lubricate lathe bedways (refer to **Page 63**).

3. If carriage lock (see **Figure 111**) is tight, loosen it two turns.

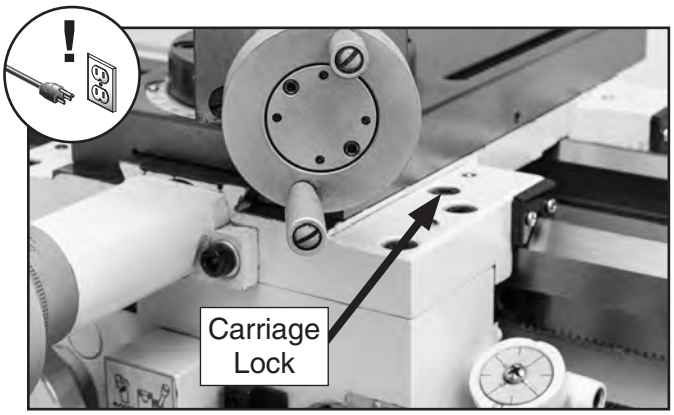

Figure 111. Location of carriage lock.

4. To access saddle gib, remove backsplash.

5. Loosen the hex nuts on four set screws shown in **Figure 110**, and adjust set screws same amount as follows:

— To tighten carriage gib, tighten set screw in equal amounts.

— To loosen gib, loosen set screws in equal amounts.

6. Move carriage back and forth and repeat adjustments as necessary until gib pressure is acceptable.

7. Hold set screws in place and tighten hex nuts.

8. Re-install backsplash.

Half Nut Adjustment

The half-nut mechanism can be adjusted if it becomes loose from wear. The half nut is mounted in ways with a gib exerting pressure between components to reduce sloppy movement. The half-nut gib is a flat, bar-type gib, similar to the saddle gib, and is tensioned with two set screws.

Tools Needed	**Qty**
Hex Wrenches 4, 5, 13mm	1 Ea.

To adjust half nut:

1. DISCONNECT MACHINE FROM POWER!

2. Disengage half nut and remove thread dial.

3. Loosen hex nuts on set screws shown in **Figure 112**.

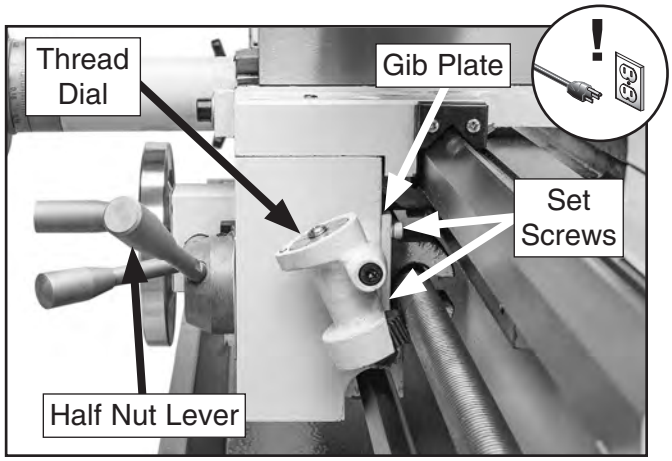

Figure 112. Half-nut gib set screws.

4. Slide gib plate inward to desired amount.

5. Tighten each set screw approximately ⅛ of a turn, then re-tighten hex nuts without moving set screws.

6. Move carriage handwheel until half nut can fully close, then open/close half nut several times and notice how it feels. Half nut is correctly adjusted when you feel a slight drag while opening and closing it. It should not feel too stiff or too loose.

7. Repeat **Steps 3–5**, if necessary, until you are satisfied with half nut adjustment, then re-install thread dial.

Leadscrew End-Play Adjustment

After a period of time, you may find that the leadscrew develops excessive end play. This lathe is designed so that end play can be removed with a simple adjustment.

Tool Needed	**Qty**
Spanner Wrench	1

To remove leadscrew end play:

1. DISCONNECT MACHINE FROM POWER!

2. Loosen outer spanner nut (see **Figure 113**).

3. Place spanner wrench on end of leadscrew.

4. Rotate carriage handwheel to move carriage toward tailstock, then tighten inner spanner nut (see **Figure 113**) until there is 0.001"–0.002" of end play.

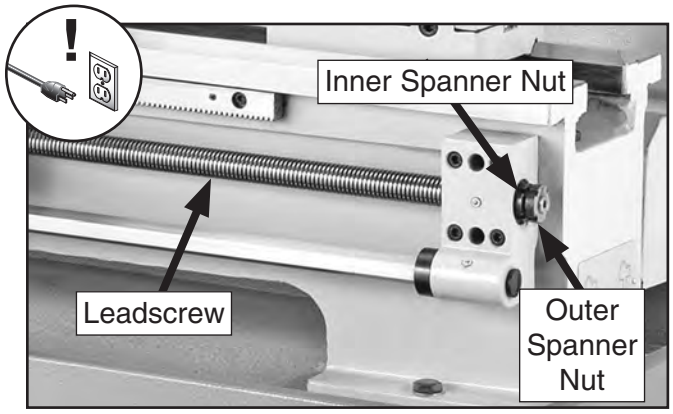

Figure 113. Leadscrew and spanner nuts.

5. Tighten outer spanner nut until it is snug against inner spanner nut to secure setting.

V-Belt Tension & Replacement

V-belts stretch and wear with use, so check tension after the first three months and then every six months to ensure optimal power transmission. Replace all V-belts as a matched set if any of them show signs of glazing, fraying, or cracking.

Tools Needed	**Qty**
Flat Head Screwdriver ¼"	1
Open-End Wrench 10mm	1

Tensioning V-Belt

1. DISCONNECT MACHINE FROM POWER!

2. Remove end gear cover (see **Figure 114**).

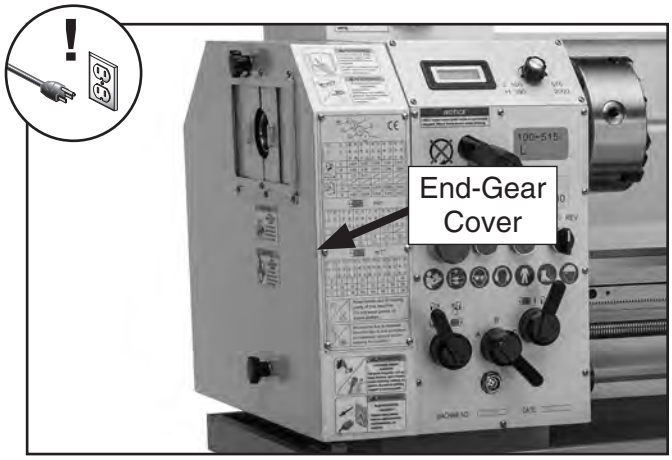

Figure 114. End-gear cover location.

3. Loosen tensioner bolt (see **Figure 115**).

4. Push tensioner against V-belt to tension it, then secure tensioner (see **Figure 115**).

5. Check belt tension: The belt is correctly tensioned when there is approximately ¾" deflection when it is pushed with moderate pressure (see **Figure 115**). If there is more than ¾" when belt is pushed, loosen tensioner bolt, adjust belt tension, then tighten tensioner bolt.

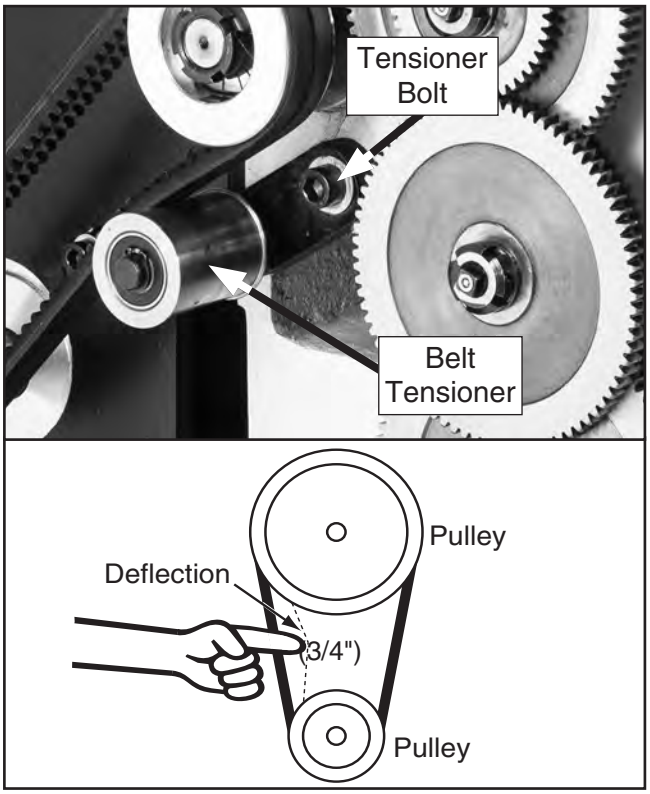

Figure 115. Adjusting V-belt tension.

6. Secure end gear cover.

Replacing V-Belt

1. DISCONNECT MACHINE FROM POWER!

2. Remove end gear cover (see **Figure 114**).

3. Loosen tensioner lock bolt, pivot tensioner to right and secure it temporarily, then remove V-belt (see **Figure 115**).

4. Install new V-belt.

5. Tension V-belt.

6. Re-install end gear cover.

Leadscrew Shear Pin Replacement

A straight 5 x 20mm brass shear pin (see **Figure 116**) holds the leadscrew and the drive hub together. The pin is designed to break and disengage the power transfer to the leadscrew to help protect more expensive lathe components in the case of a carriage crash or the lathe is overloaded.

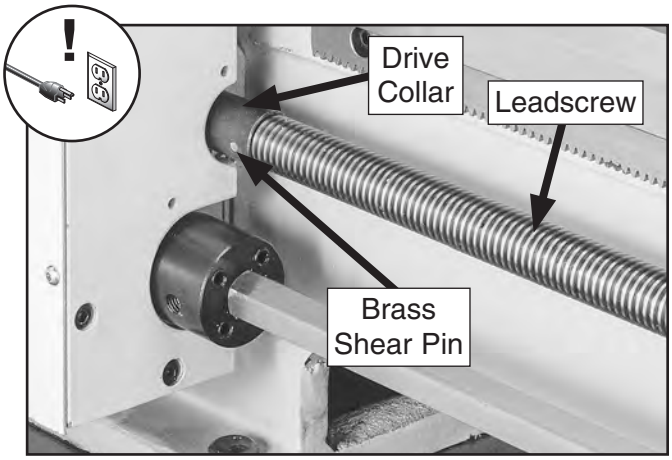

Figure 116. Leadscrew shear pin.

Tools Needed	**Qty**
Hammer	1
Dowel Punch 3/16"	1
Brass Shear Pin (#P0949G274)	1

To replace leadscrew shear pin:

1. DISCONNECT MACHINE FROM POWER!
2. Place quick-change gear levers in neutral.
3. Disengage half-nut lever and move FWD/REV switch to "0" (see **Figure 117**) so leadscrew can be rotated by hand.

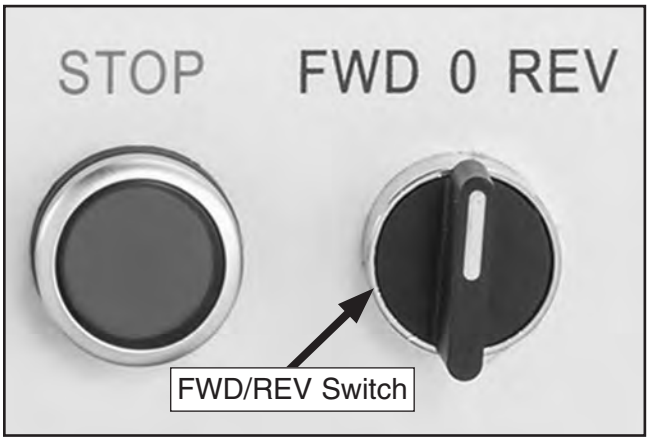

Figure 117. FWD/REV switch set to "0".

4. Rotate leadscrew so shear pin is facing up and down. If drive collar rotates independently of leadscrew, then rotate collar so shear pin holes align with those in leadscrew.
5. Use punch and hammer to drive out pieces of old shear pin.
6. Make sure holes in collar and leadscrew are aligned, then tap new shear pin completely through holes in collar and leadscrew.

Feed Clutch Adjustment

This lathe is equipped with a feed rod clutch, shown in **Figure 118**, that connects the feed drive hub with the feed rod through a set of spring-loaded ball bearings. This clutch helps protect the apron feed system from overload. The feed rod clutch comes set from the factory, and unless there is a problem, it needs no adjustment.

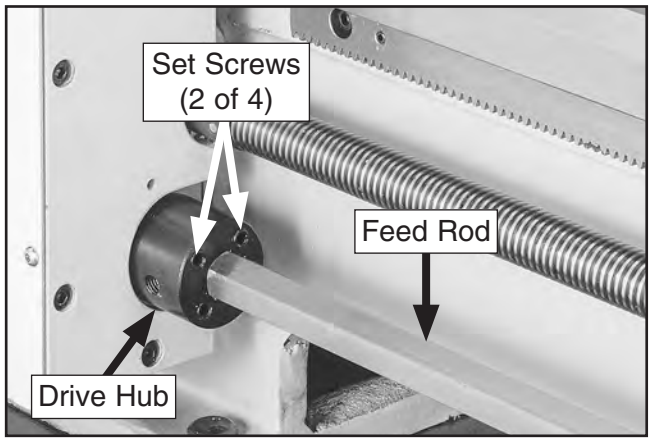

Figure 118. Feed rod clutch.

The clutch may slip if the path for the carriage or the cross feed is obstructed during turning or facing operations, the tool bit crashes into a workpiece shoulder, the carriage lock is incorrectly tightened when the feed selection lever is engaged, or if too deep of a cut is taken—causing a sudden binding of the tool and workpiece.

NOTICE

Never completely tighten the feed clutch past its normal setting in an attempt to completely eliminate clutch slip. Doing so will void the warranty, and can lead to a non-slipping clutch, resulting in catastrophic gearbox damage.

Tool Needed	**Qty**
Hex Wrench 4mm	1

To adjust feed rod clutch:

1. DISCONNECT MACHINE FROM POWER!

2. Move FWD/REV switch to "0" (see **Figure 119**) so feed rod can be rotated by hand.

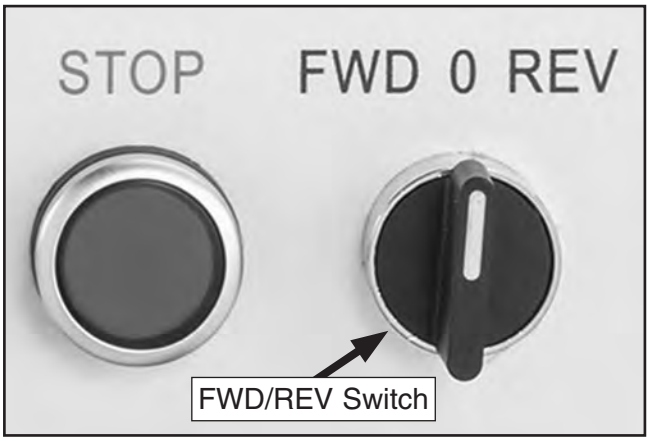

Figure 119. FWD/REV switch set to "0".

— If clutch slips during normal work loads, increase clutch spring pressure by tightening each of four clutch drive set screws shown in **Figure 118** one full turn, then recheck for slippage.

— If clutch does not slip when it should, reduce clutch spring pressure by loosening each of four clutch set screws one full turn, then recheck for slippage.

Bearing Preload

This lathe is shipped from the factory with the spindle bearing preload adjusted. If the spindle ever develops a bit of end-play and the workpiece finish suffers, you can adjust the bearing preload to remove the end-play and improve the workpiece finish.

Adjusting the bearing preload requires using a spanner wrench or a punch and hammer. You can either purchase the spanner wrench at a tool store or fabricate one, using the diagram shown in **Figure 120**.

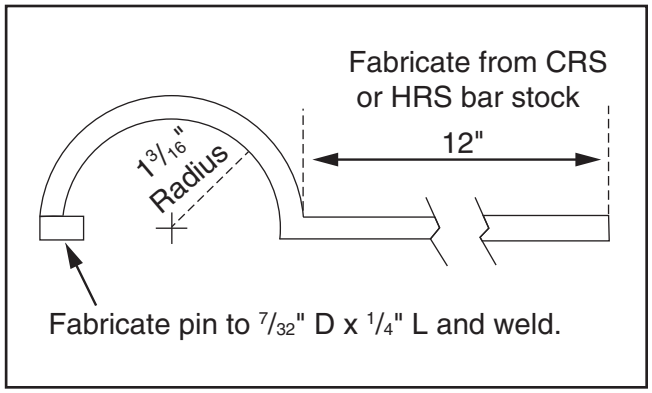

Figure 120. Spanner wrench diagram.

Tools Needed	**Qty**
Spanner Wrench 1 3/16"	1
Chuck Key	1
Dead Blow Hammer	1
Piece of Scrap Wood 2"x 2" x 6"	1
Dial Indicator	1
Hex Wrench 6mm	1

To adjust bearing preload:

1. Run lathe for 20 minutes at high speed to bring lathe to normal operating temperature.

2. DISCONNECT MACHINE FROM POWER!

3. Remove end gear cover.

4. Remove chuck (see **Page 33**), then shift spindle to neutral by moving FWD/REV switch to "0" (see **Figure 119** on **Page 75**).

5. Place chuck key in cam-lock socket and keep spindle from rotating.

6. Using a spanner wrench, or hammer and punch, rotate outer spanner nut (see **Figure 121**) counterclockwise and remove it.

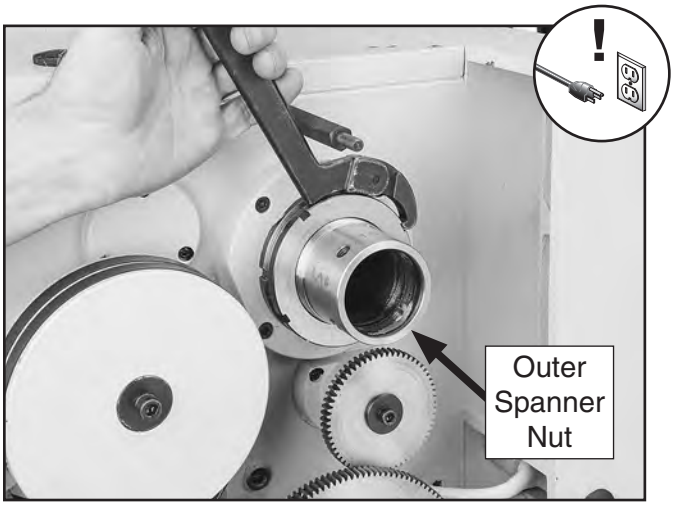

Figure 121. Loosening outer spanner nut.

7. Loosen inner spanner nut one turn.

   Note: *You may have to tap on the outboard end of the spindle as explained in* ***Step 8*** on ***Page 77****, to help unload the spindle and break the spanner nut loose.*

8. Place a wooden block over outboard end of spindle, and tap it a few times with a small sledge or heavy dead blow hammer (see **Figure 122**).

Note: *Your goal is to slide the spindle forward just enough to introduce spindle end-play that you can feel by hand.*

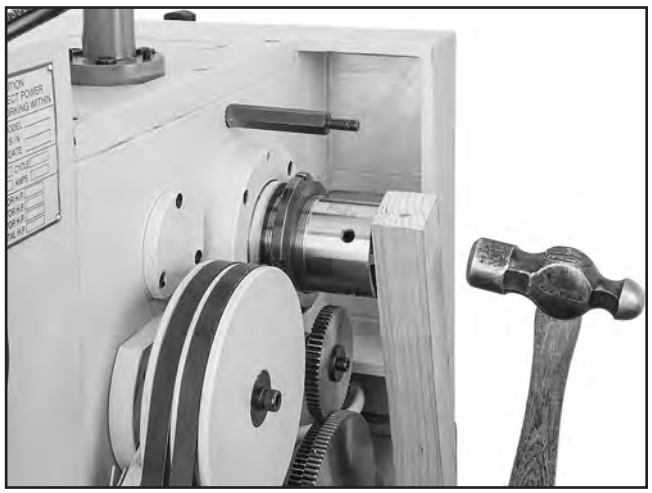

Figure 122. Introducing detectable end-play.

9. Place a dial indicator on cross slide and move carriage toward headstock until contact point of indicator touches spindle face, as shown in **Figure 123**.

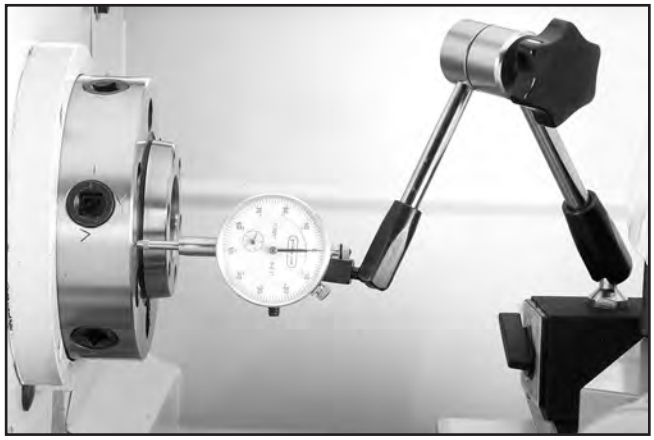

Figure 123. Example of dial indicator setup.

10. Move carriage an additional 0.100" toward headstock.

11. Insert chuck key into a cam socket to prevent spindle from turning, then tighten inner spanner nut until dial indicator needle just stops moving (see **Figure 124**).

Note: *For convenience and accuracy, we recommend having another person watch the dial while you tighten the inner spanner nut.*

Figure 124. Adjusting spindle bearings.

While tightening the inner spanner nut, rock the spindle back and forth slightly with the chuck key to make sure the spindle tapered roller bearings seat properly in their races.

When the dial indicator needle stops moving, there will be no spindle end-play and no bearing preload. It is important that you find this point without tightening the spanner nut too much and inadvertently preloading the spindle bearings.

If you think you have gone past the zero end-play point, unload the bearings by repeating **Steps 8–9**, then re-tighten the inner spanner nut until it has reached the zero end-play position.

12. Tighten inner spanner nut an additional 1/16" along its circumference. See **Figure 125** for an example of this measurement.

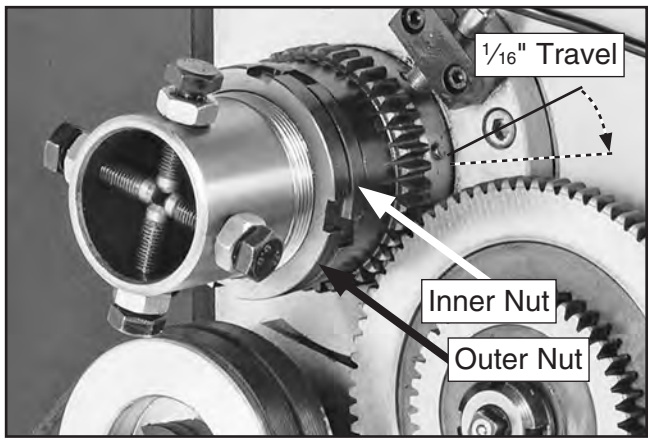

Figure 125. Final spanner nut rotation.

13. Without allowing inner spanner nut to tighten any further, install and tighten outer spanner nut against inner nut (see **Figure 126**).

    IMPORTANT: DO NOT overtighten outer spanner nut because additional preload can force bearings even tighter against races in the headstock and cause headstock to compress, crack, or cause bearing failure.

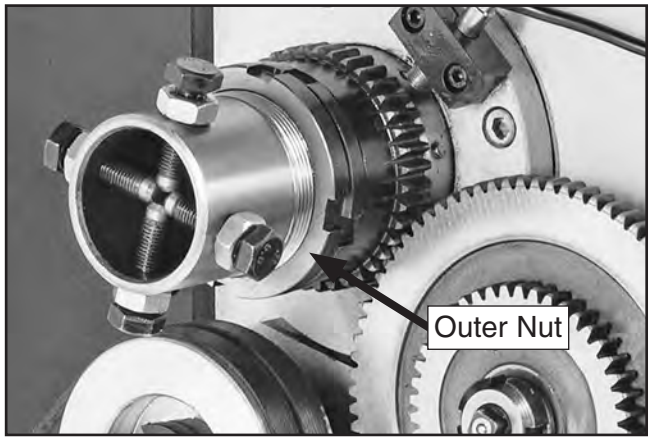

Figure 126. Outer spanner nut re-installed.

14. Re-install end gear cover.

To confirm bearings are correctly preloaded:

1. Re-attach all removed lathe components and prepare lathe for operation.

2. Install chuck and tighten jaws.

3. Set spindle speed to its highest setting.

4. Connect lathe to power and turn lathe spindle ***ON***.

5. Let lathe run for 20 minutes, periodically shutting it down a few times and checking temperature.

   IMPORTANT: Stop running lathe if the temperature gets too hot. If you can not comfortably touch spindle nose immediately disconnect machine from power.

6. Turn spindle ***OFF***, disconnect lathe from power, and check temperature of spindle.

   — If spindle nose is slightly warm to the touch, you have correct bearing preload.

   — If spindle nose is hotter than you can comfortably keep your hand on, preload is too tight and you must repeat bearing preload adjustment procedure. When repeating the procedure, rotate the inner spanner nut a little less during **Step 12** in the preceding instructions.

SECTION 8: WIRING

These pages are current at the time of printing. However, in the spirit of improvement, we may make changes to the electrical systems of future machines. Compare the manufacture date of your machine to the one stated in this manual, and study this section carefully.

If there are differences between your machine and what is shown in this section, call Technical Support at (570) 546-9663 for assistance BEFORE making any changes to the wiring on your machine. An updated wiring diagram may be available. **Note:** *Please gather the serial number and manufacture date of your machine before calling. This information can be found on the main machine label.*

⚠WARNING
Wiring Safety Instructions

SHOCK HAZARD. Working on wiring that is connected to a power source is extremely dangerous. Touching electrified parts will result in personal injury including but not limited to severe burns, electrocution, or death. Disconnect the power from the machine before servicing electrical components!

MODIFICATIONS. Modifying the wiring beyond what is shown in the diagram may lead to unpredictable results, including serious injury or fire. This includes the installation of unapproved aftermarket parts.

WIRE CONNECTIONS. All connections must be tight to prevent wires from loosening during machine operation. Double-check all wires disconnected or connected during any wiring task to ensure tight connections.

CIRCUIT REQUIREMENTS. You MUST follow the requirements at the beginning of this manual when connecting your machine to a power source.

WIRE/COMPONENT DAMAGE. Damaged wires or components increase the risk of serious personal injury, fire, or machine damage. If you notice that any wires or components are damaged while performing a wiring task, replace those wires or components.

MOTOR WIRING. The motor wiring shown in these diagrams is current at the time of printing but may not match your machine. If you find this to be the case, use the wiring diagram inside the motor junction box.

CAPACITORS/INVERTERS. Some capacitors and power inverters store an electrical charge for up to 10 minutes after being disconnected from the power source. To reduce the risk of being shocked, wait at least this long before working on capacitors.

EXPERIENCING DIFFICULTIES. If you are experiencing difficulties understanding the information included in this section, contact our Technical Support at (570) 546-9663.

NOTICE

The photos and diagrams included in this section are best viewed in color. You can view these pages in color at www.grizzly.com.

COLOR KEY

BLACK	Bk	BLUE	Bl	YELLOW	Yl	LIGHT BLUE	Lb
WHITE	Wt	BROWN	Br	YELLOW GREEN	Yg	BLUE WHITE	Bw
GREEN	Gn	GRAY	Gy	PURPLE	Pu	TUR-QUOISE	Tu
RED	Rd	ORANGE	Or	PINK	Pk		

Wiring Overview

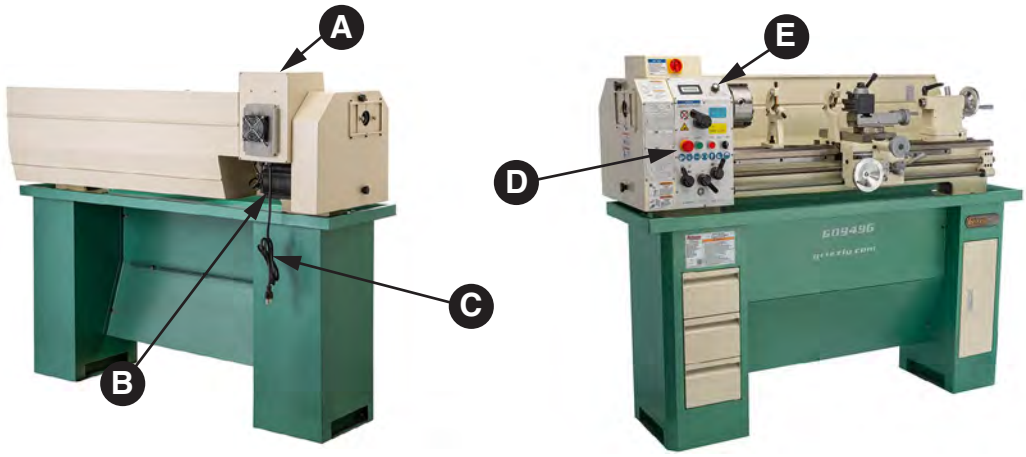

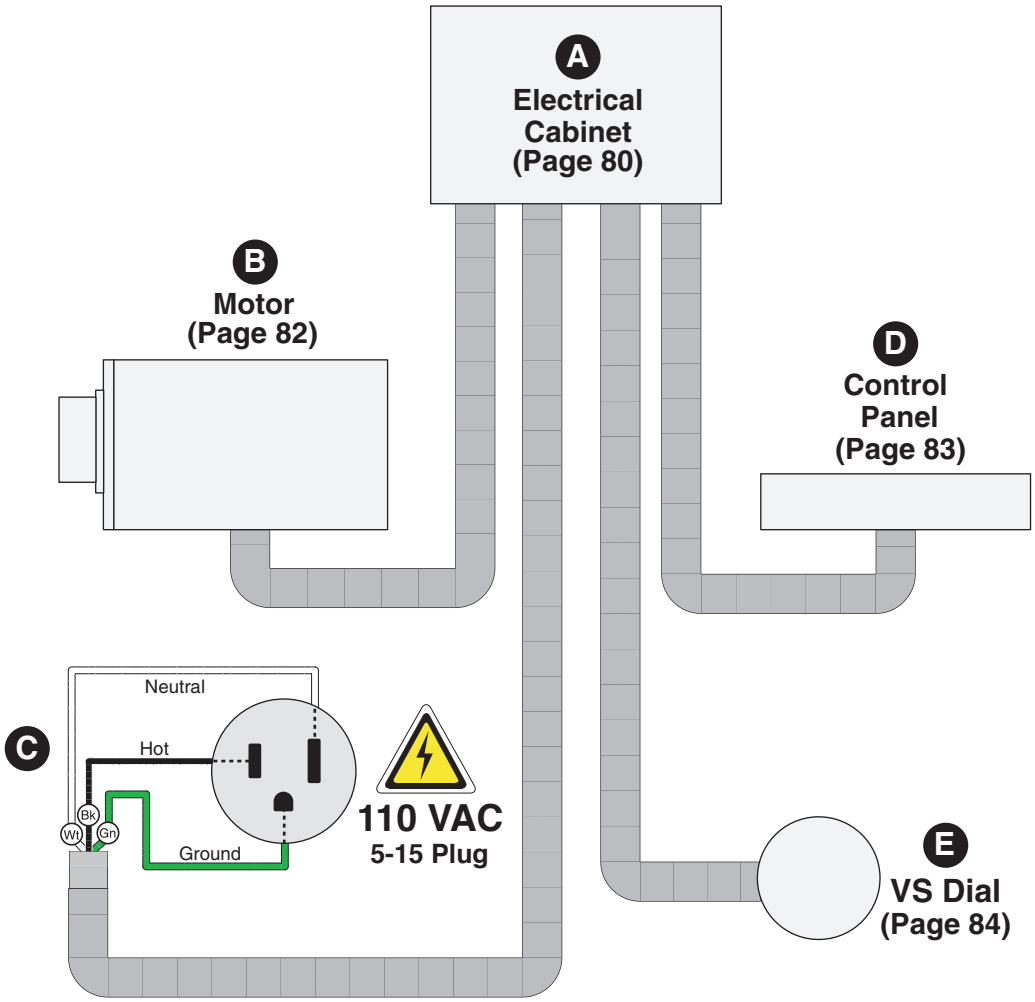

STOP **READ ELECTRICAL SAFETY ON PAGE 79!**

Electrical Cabinet Wiring

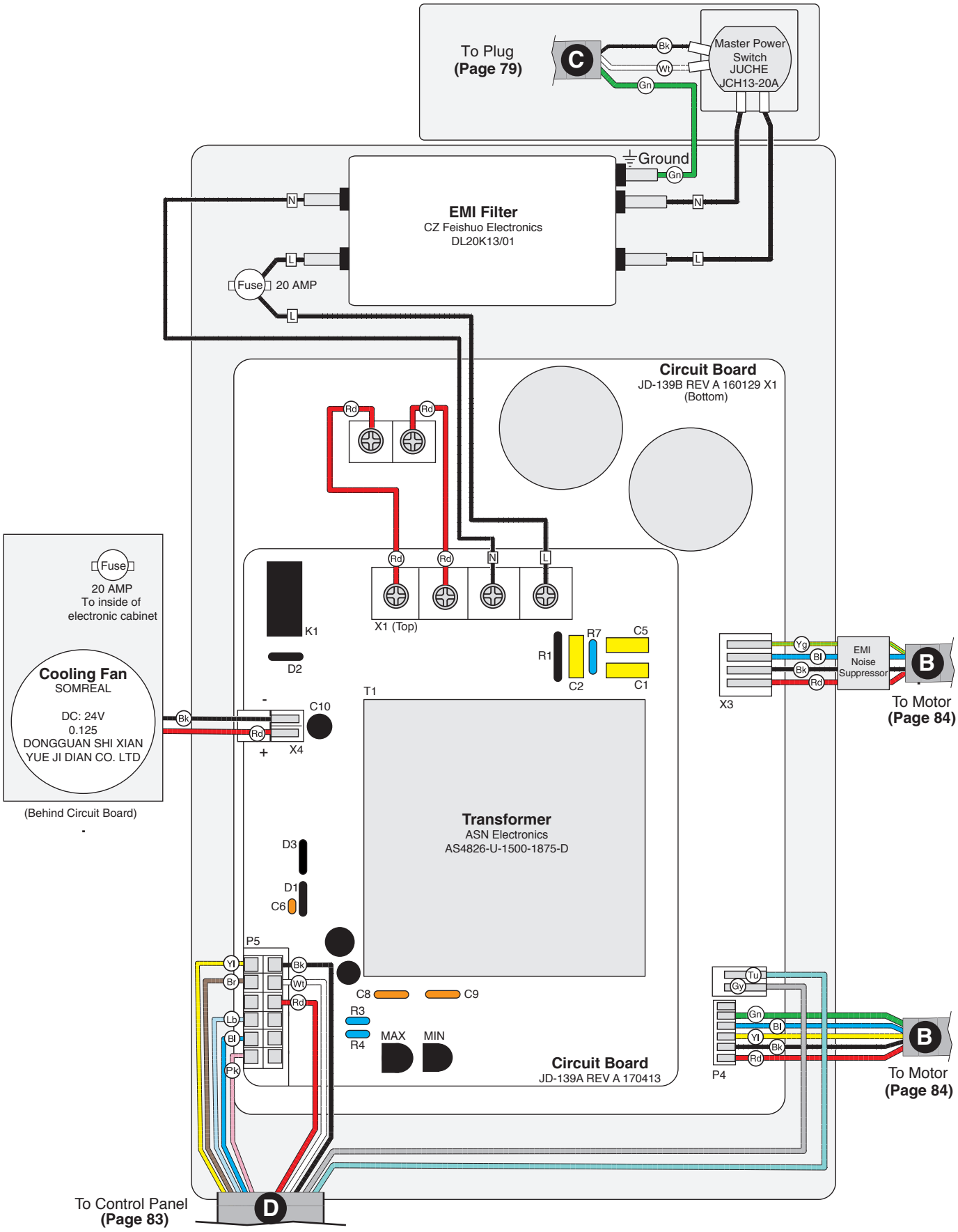

STOP **READ ELECTRICAL SAFETY ON PAGE 79!**

Electrical Cabinet

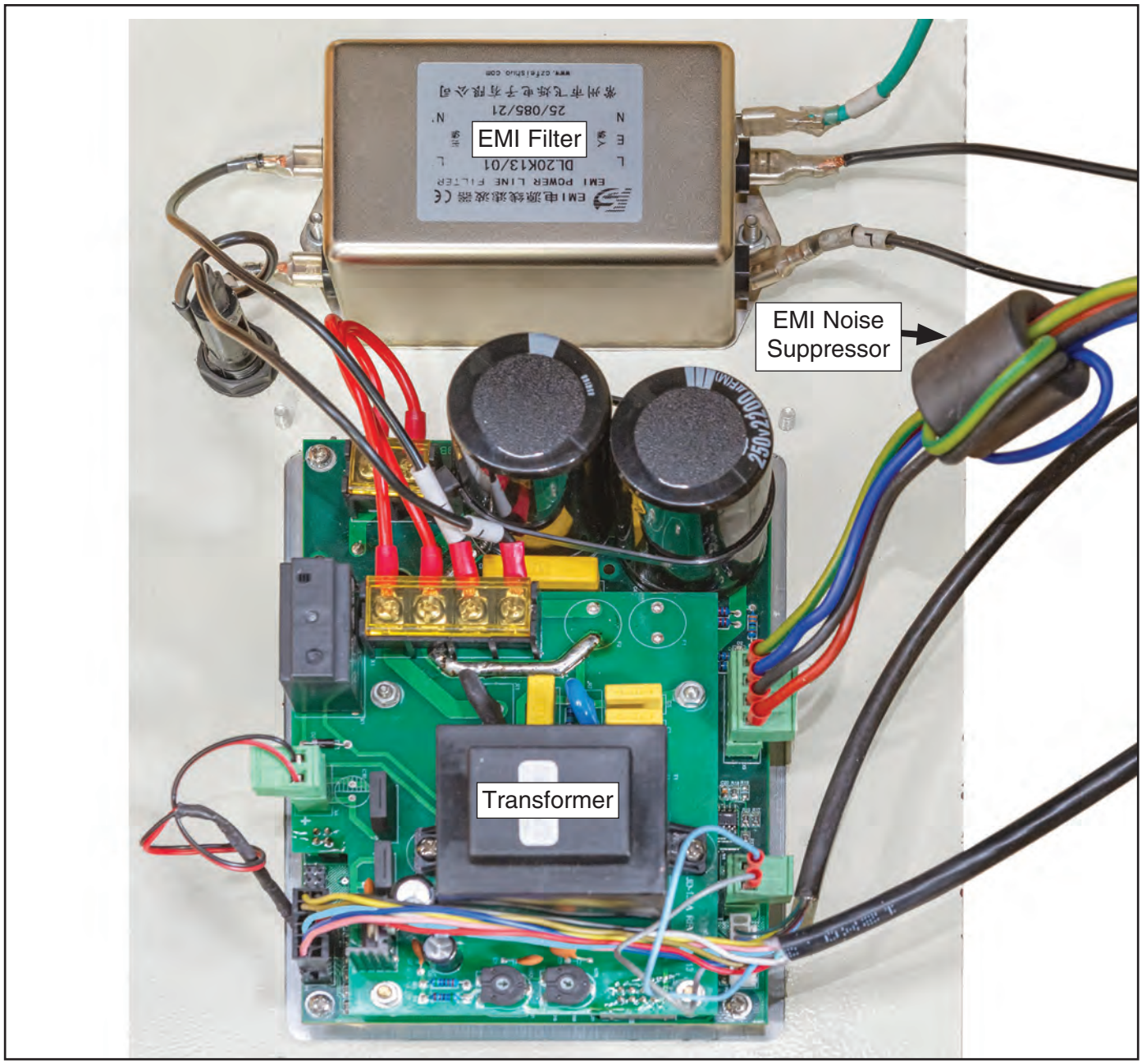

Figure 127. Electrical cabinet wiring.

Figure 128. Master power switch.

STOP ***READ ELECTRICAL SAFETY ON PAGE 79!***

Motor

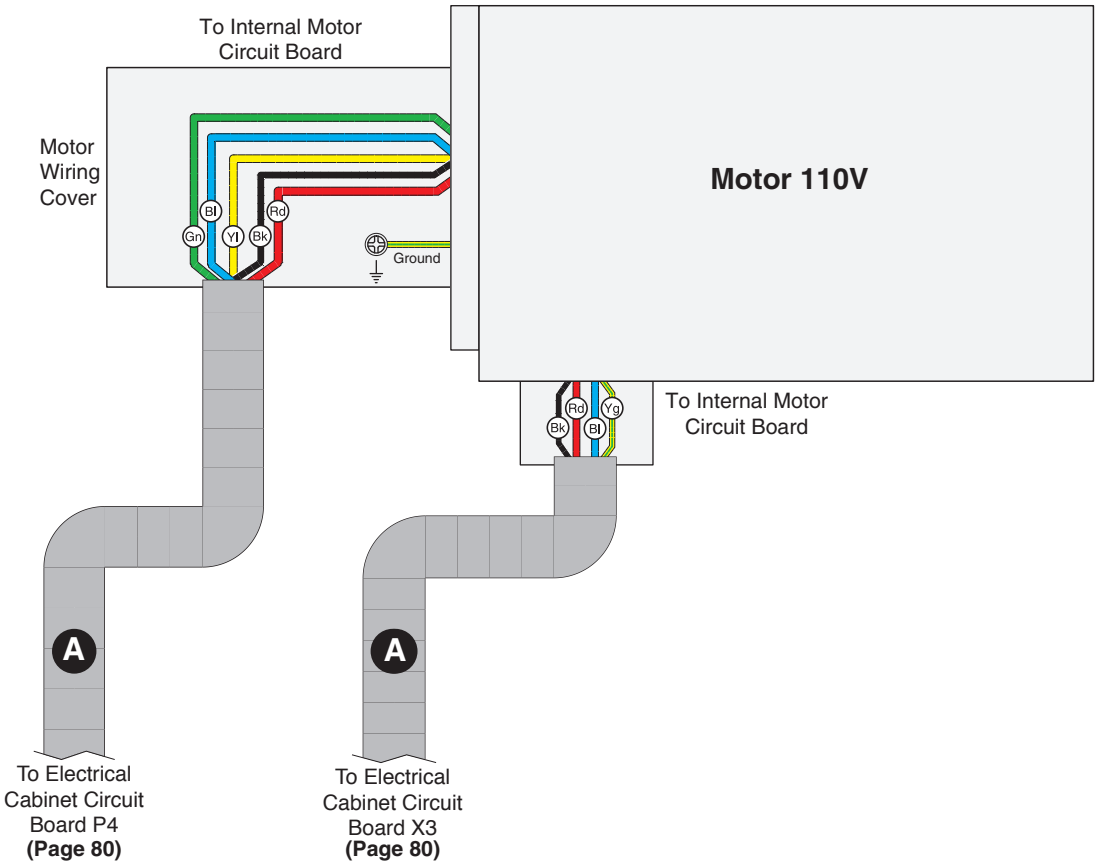

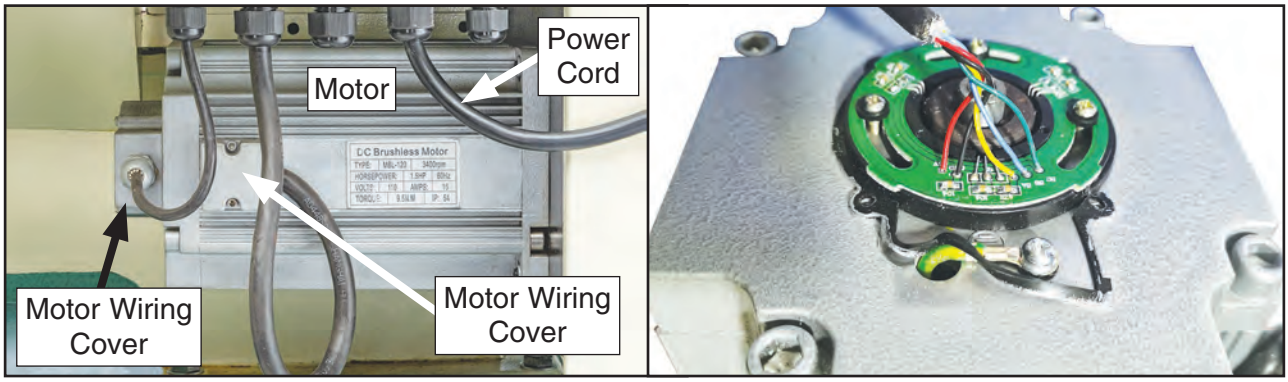

Figure 129. Motor and motor wiring cover.

Figure 130. Motor wiring cover.

Control Panel

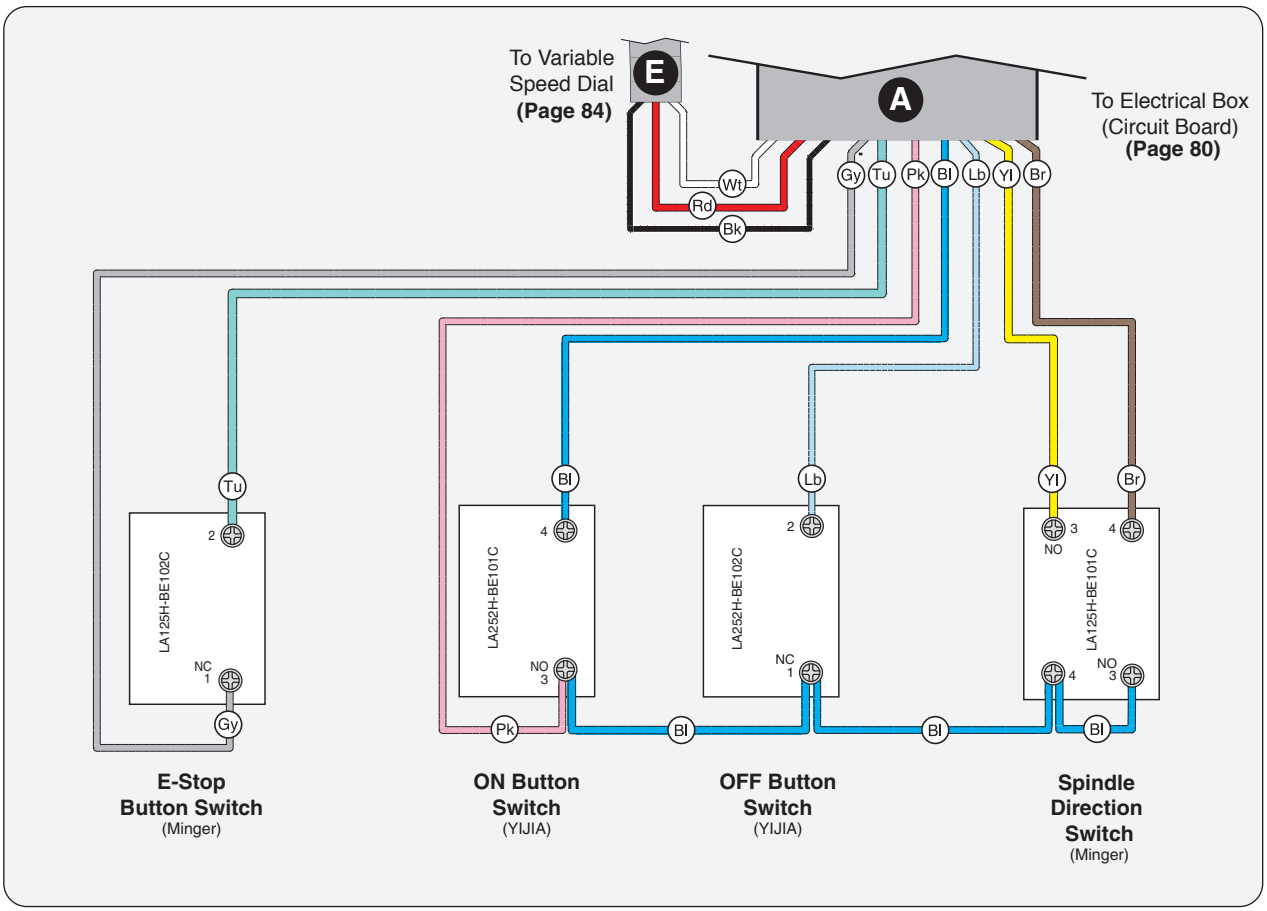

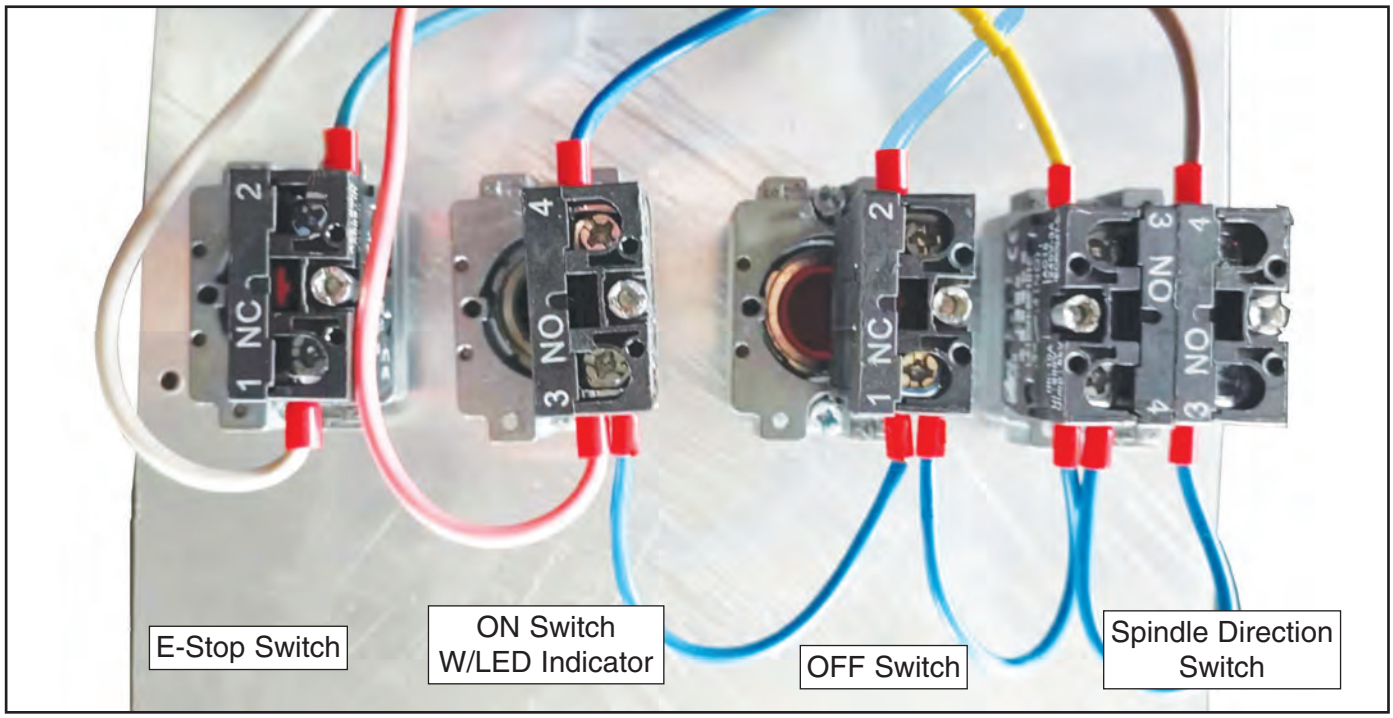

Figure 131. Control panel.

READ ELECTRICAL SAFETY ON PAGE 79!

Variable Speed Dial & RPM Indicator

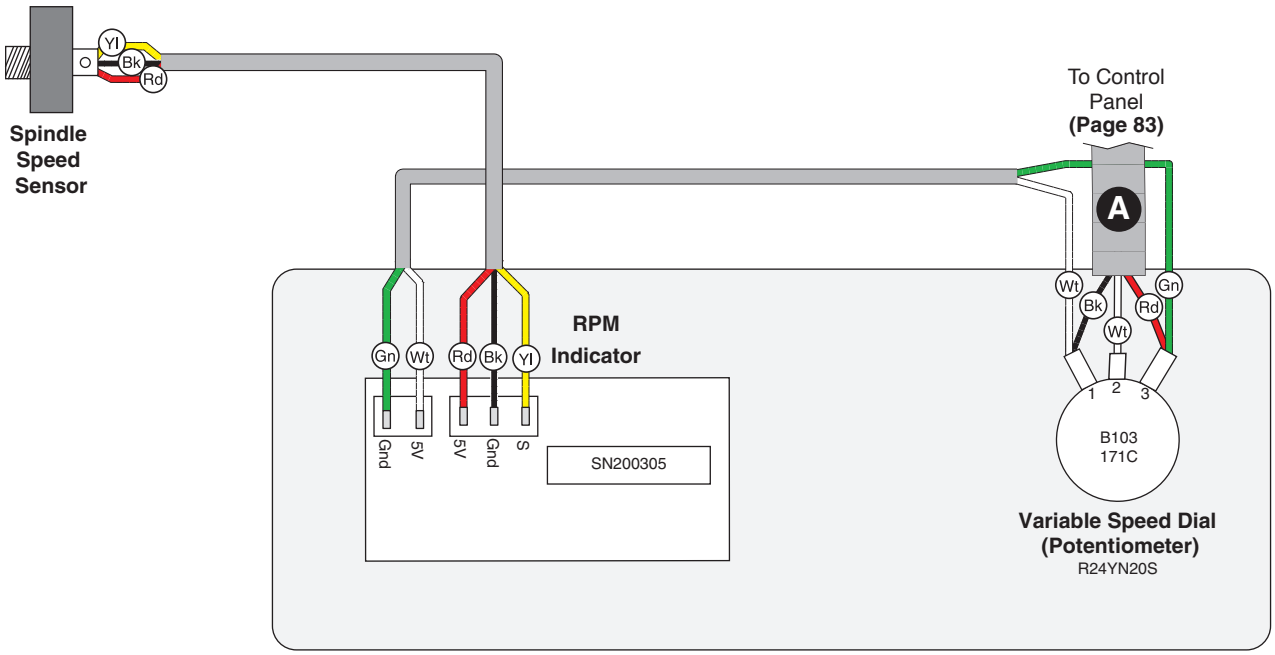

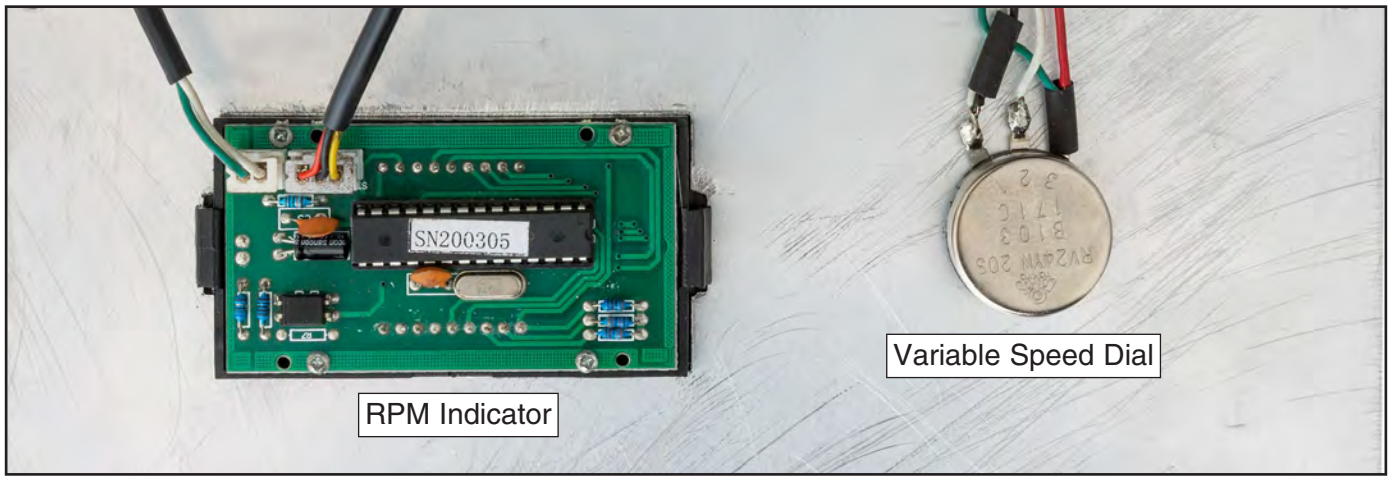

Figure 132. Variable speed dial and RPM indicator.

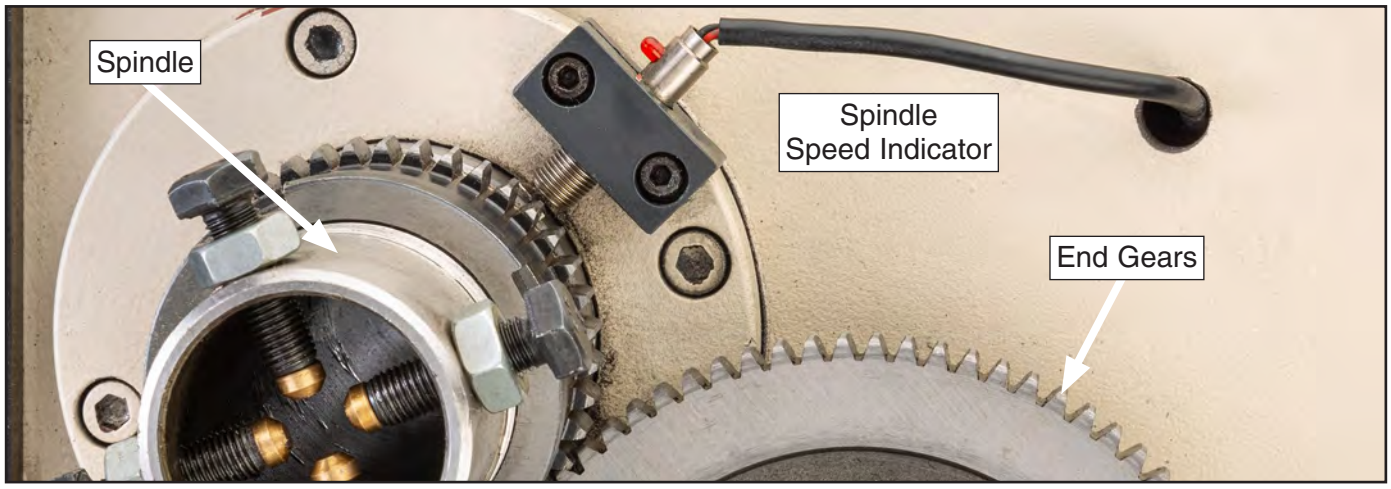

Figure 133. Spindle speed indicator.

STOP ***READ ELECTRICAL SAFETY ON PAGE 79!***

SECTION 9: PARTS

Please Note: *We do our best to stock replacement parts whenever possible, but we cannot guarantee that all parts shown here are available for purchase. Call* ***(800) 523-4777*** *or visit our online parts store at* ***www.grizzly.com*** *to check for availability.*

Headstock

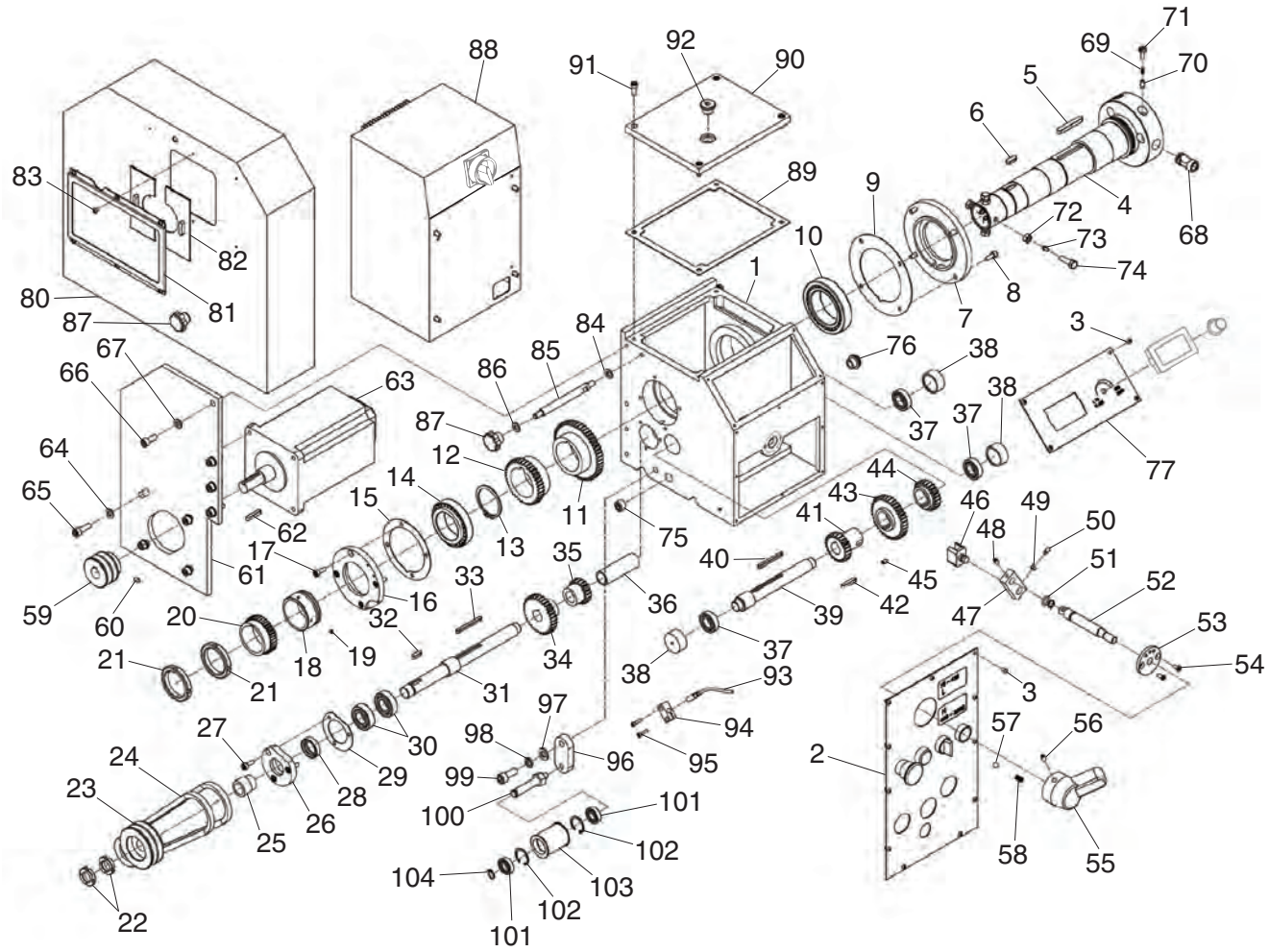

Headstock Parts List

REF	PART #	DESCRIPTION
1	P0949G0001	HEADSTOCK HOUSING
2	P0949G0002	HEADSTOCK CONTROL PANEL PLATE
3	P0949G0003	CAP SCREW M4-.7 X 8
4	P0949G0004	SPINDLE
5	P0949G0005	KEY 8 X 32 X 56
6	P0949G0006	KEY 8 X 20 X 56
7	P0949G0007	INBOARD SPINDLE BEARING COVER
8	P0949G0008	CAP SCREW M6-1 X 16
9	P0949G0009	INBOARD SPINDLE BEARING COVER
10	P0949G0010	TAPERED ROLLER BEARING 32012
11	P0949G0011	GEAR 50T
12	P0949G0012	GEAR 38T
13	P0949G0013	EXT RETAINING RING 52MM
14	P0949G0014	TAPERED ROLLER BEARING 32012
15	P0949G0015	OUTBOARD SPINDLE GASKET
16	P0949G0016	OUTBOARD SPINDLE COVER
17	P0949G0017	CAP SCREW M6-1 X 16
18	P0949G0018	BEAD COLLAR
19	P0949G0019	BEAD
20	P0949G0020	GEAR 40T
21	P0949G0021	SPANNER NUT M48-5 X 1.5
22	P0949G0022	SPANNER NUT M20-2.5 X 1.5
23	P0949G0023	V-BELT PULLEY
24	P0949G0024	V-BELT V10 X 630
25	P0949G0025	BUSHING
26	P0949G0026	GEAR SHAFT END COVER
27	P0949G0027	CAP SCREW M6-1 X 16
28	P0949G0028	OIL SEAL
29	P0949G0029	GASKET
30	P0949G0030	BALL BEARING 6004ZZ
31	P0949G0031	GEAR SHAFT
32	P0949G0032	KEY 6 X 6 X 20
33	P0949G0033	KEY 5 X 5 X 56
34	P0949G0034	GEAR 28T
35	P0949G0035	GEAR 19T
36	P0949G0036	BUSHING
37	P0949G0037	BALL BEARING 6003ZZ
38	P0949G0038	PLUG
39	P0949G0039	GEAR SHAFT
40	P0949G0040	KEY 5 X 5 X 70 RE
41	P0949G0041	GEAR 27T
42	P0949G0042	KEY 6 X 6 X 32 RE
43	P0949G0043	GEAR 36T
44	P0949G0044	GEAR 24T
45	P0949G0045	SET SCREW M6-1 X 10
46	P0949G0046	SHIFTING FORK
47	P0949G0047	ROCKER ARM
48	P0949G0048	SET SCREW M6-1 X 10
49	P0949G0049	HEX NUT M5-.8
50	P0949G0050	SET SCREW M5-.8 X 12
51	P0949G0051	O-RING 11.2 X 2.65

REF	PART #	DESCRIPTION
52	P0949G0052	SPEED RANGE SHAFT
53	P0949G0053	GEAR PLATE, HIGH/LOW
54	P0949G0054	FLAT HD SCR M5-.8 X 12
55	P0949G0055	GEAR HANDLE, HIGH/LOW
56	P0949G0056	SET SCREW M6-1 X 10
57	P0949G0057	STEEL BALL 6MM
58	P0949G0058	COMPRESSION SPRING 1 X 5 X 30
59	P0949G0059	MOTOR PULLEY
60	P0949G0060	SET SCREW M6-1 X 10
61	P0949G0061	MOTOR MOUNTING PLATE
62	P0949G0062	KEY 6 X 6 X 30 RE
63	P0949G0063	MOTOR 1-1/2HP 110V 1-PH
64	P0949G0064	FLAT WASHER 8MM
65	P0949G0065	CAP SCREW M8-1.25 X 25
66	P0949G0066	CAP SCREW M8-1.25 X 25
67	P0949G0067	FLAT WASHER 8MM
68	P0949G0068	CAMLOCK
69	P0949G0069	PIN
70	P0949G0070	COMPRESSION SPRING 1 X 5 X 30
71	P0949G0071	HEX BOLT M8-1.25 X 16
72	P0949G0072	HEX NUT M8-1
73	P0949G0073	BRASS TIP
74	P0949G0074	HEX BOLT M8-1 X 25
75	P0949G0075	OIL DRAIN PLUG 3/8"
76	P0949G0076	OIL SIGHT GLASS M18 X 1.5
77	P0949G0077	VARIABLE SPEED CONTROL PANEL
80	P0949G0080	END GEAR COVER
81	P0949G0081	SLIDING DOOR FRAME
82	P0949G0082	SLIDING DOOR
83	P0949G0083	CAP SCREW M4-.7 X 8
84	P0949G0084	FLAT WASHER 8MM
85	P0949G0085	STUD-DE M8-1.25 X 137, 11LH, 11
86	P0949G0086	FLAT WASHER 8MM
87	P0949G0087	KNOB M8-1.25, 7-LOBE, D32
88	P0949G0088	ELECTRICAL BOX
89	P0949G0089	GASKET
90	P0949G0090	GEARBOX COVER
91	P0949G0091	CAP SCREW M6-1 X 16
92	P0949G0092	OIL PLUG M18 X 1.5
93	P0949G0093	SPEED SENSOR RING W/MAGNETS
94	P0949G0094	PROBE HOLDER
95	P0949G0095	CAP SCREW M4-.7 X 16
96	P0949G0096	TENSION WHEEL ARM
97	P0949G0097	FLAT WASHER 10MM
98	P0949G0098	LOCK WASHER 10MM
99	P0949G0099	CAP SCREW M10-1.5 X 25
100	P0949G0100	TENSION WHEEL SHAFT
101	P0949G0101	BALL BEARING 6001ZZ
102	P0949G0102	INT RETAINING RING 28MM
103	P0949G0103	TENSION WHEEL
104	P0949G0104	EXT RETAINING RING 12MM

Gearbox

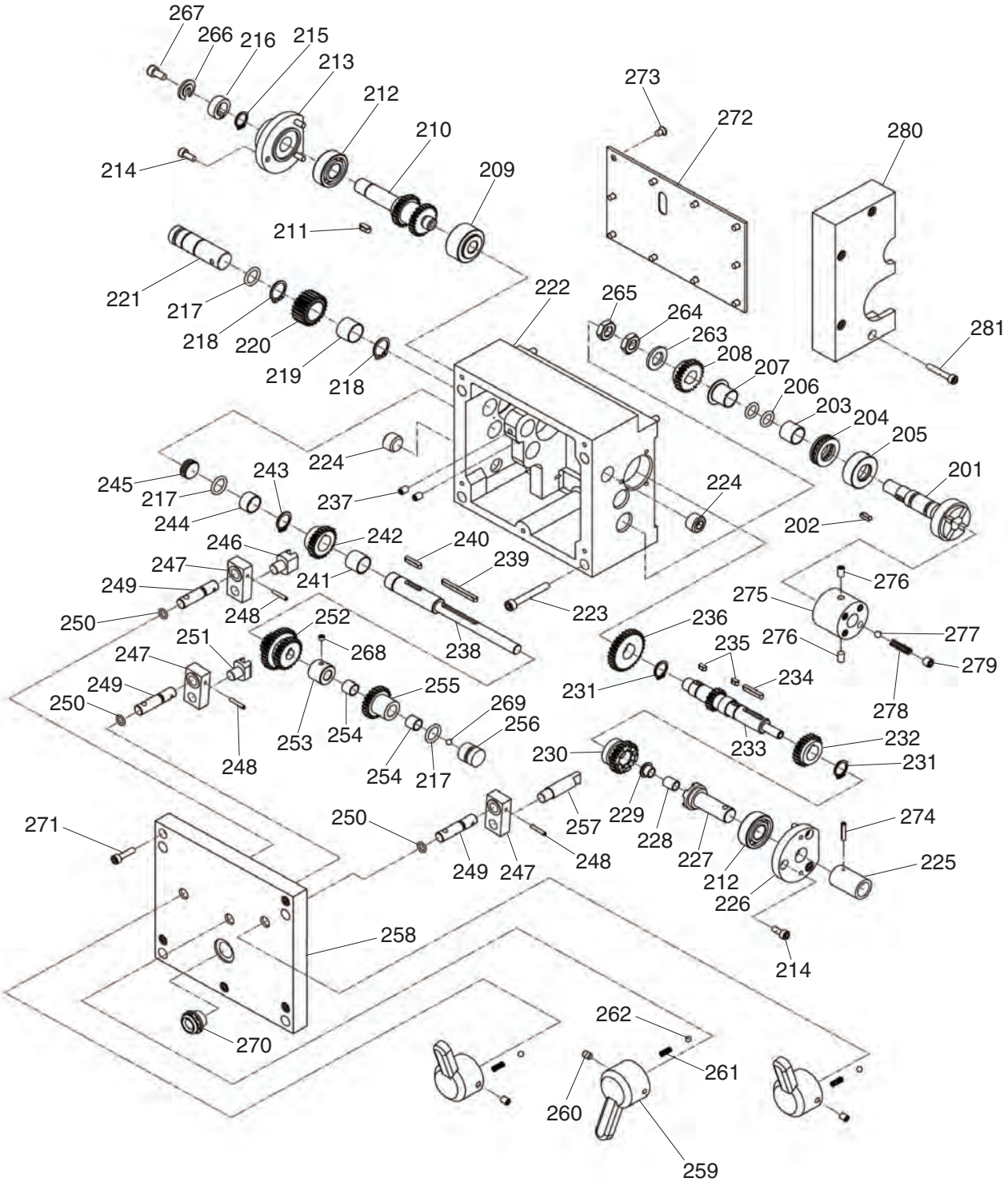

Gearbox Parts List

REF	PART #	DESCRIPTION
201	P0949G0201	FEED ROD SHAFT
202	P0949G0202	KEY 4 X 4 X 12 RE
203	P0949G0203	BEARING SHEATH
204	P0949G0204	THRUST BEARING 51103
205	P0949G0205	BALL BEARING 6202ZZ
206	P0949G0206	SLOTTED WASHER 18 X 20 X 3
207	P0949G0207	FLANGED BUSHING 24 X 18 X 17
208	P0949G0208	GEAR 24T
209	P0949G0209	BUSHING
210	P0949G0210	GEAR SHAFT 24T
211	P0949G0211	KEY 5 X 5 X 12 RE
212	P0949G0212	BALL BEARING 6202ZZ
213	P0949G0213	LEFT FLANGE
214	P0949G0214	CAP SCREW M5-.8 X 12
215	P0949G0215	EXT RETAINING RING 14MM
216	P0949G0216	COLLAR
217	P0949G0217	O-RING 18 X 2.4 P18
218	P0949G0218	EXT RETAINING RING 18MM
219	P0949G0219	BUSHING 18ID X 20OD X 15L
220	P0949G0220	GEAR 24T
221	P0949G0221	SHAFT
222	P0949G0222	GEARBOX
223	P0949G0223	CAP SCREW M6-1 X 50
224	P0949G0224	OIL PLUG 3/8"
225	P0949G0225	COLLAR
226	P0949G0226	RIGHT FLANGE
227	P0949G0227	SHAFT
228	P0949G0228	BUSHING 8ID X 10D X 12L
229	P0949G0229	FLANGED BUSHING 8ID X 10D X 7.5L
230	P0949G0230	GEAR 24T
231	P0949G0231	EXT RETAINING RING 15MM
232	P0949G0232	GEAR 24T
233	P0949G0233	GEAR SHAFT 16T
234	P0949G0234	KEY 4 X 4 X 25 RE
235	P0949G0235	KEY 4 X 4 X 8 RE
236	P0949G0236	GEAR 32T
237	P0949G0237	SET SCREW M6-1 X 10
238	P0949G0238	SHAFT
239	P0949G0239	KEY 4 X 4 X 45
240	P0949G0240	KEY 4 X 4 X 20
241	P0949G0241	BUSHING 16ID X 18OD X 15L

REF	PART #	DESCRIPTION
242	P0949G0242	GEAR 24T
243	P0949G0243	EXT RETAINING RING 16MM
244	P0949G0244	BUSHING 16ID X 18OD X 10L
245	P0949G0245	LEFT PLUG
246	P0949G0246	SHIFTING FORK
247	P0949G0247	ROCKER ARM
248	P0949G0248	ROLL PIN 3 X 20
249	P0949G0249	FEED SELECTION SHAFT
250	P0949G0250	O-RING 6.7 X 1.8
251	P0949G0251	SHIFTING FORK
252	P0949G0252	COMBO GEAR 16T/32T/24T
253	P0949G0253	COLLAR
254	P0949G0254	BUSHING 10ID X 12OD X 10L
255	P0949G0255	GEAR 24T
256	P0949G0256	RIGHT PLUG
257	P0949G0257	SHAFT
258	P0949G0258	GEARBOX COVER (FRONT)
259	P0949G0259	FEED SELECTION KNOB
260	P0949G0260	SET SCREW M6-1 X 10
261	P0949G0261	COMPRESSION SPRING 0.7 X 4.7 X 16
262	P0949G0262	STEEL BALL 5MM
263	P0949G0263	FLAT WASHER 12MM
264	P0949G0264	HEX NUT M12-1.75
265	P0949G0265	HEX NUT M12-1.75
266	P0949G0266	EXT RETAINING RING 25MM
267	P0949G0267	CAP SCREW M6-1 X 12
268	P0949G0268	SET SCREW M5-.8 X 5
269	P0949G0269	STEEL BALL 6.5MM
270	P0949G0270	OIL SIGHT GLASS M18 X 1.5
271	P0949G0271	CAP SCREW M5-.8 X 20
272	P0949G0272	GEARBOX COVER (REAR)
273	P0949G0273	BUTTON HD CAP SCR M5-.8 X 8
274	P0949G0274	ROLL PIN 5 X 20
275	P0949G0275	OVERLOAD SHAFT SLEEVE
276	P0949G0276	SET SCREW M6-1 X 10
277	P0949G0277	STEEL BALL 6MM
278	P0949G0278	COMPRESSION SPRING 0.7 X 4.7 X 16
279	P0949G0279	SET SCREW M8-1.25 X 8
280	P0949G0280	GEARBOX OIL PLUG COVER
281	P0949G0281	CAP SCREW M5-.8 X 30

Carriage

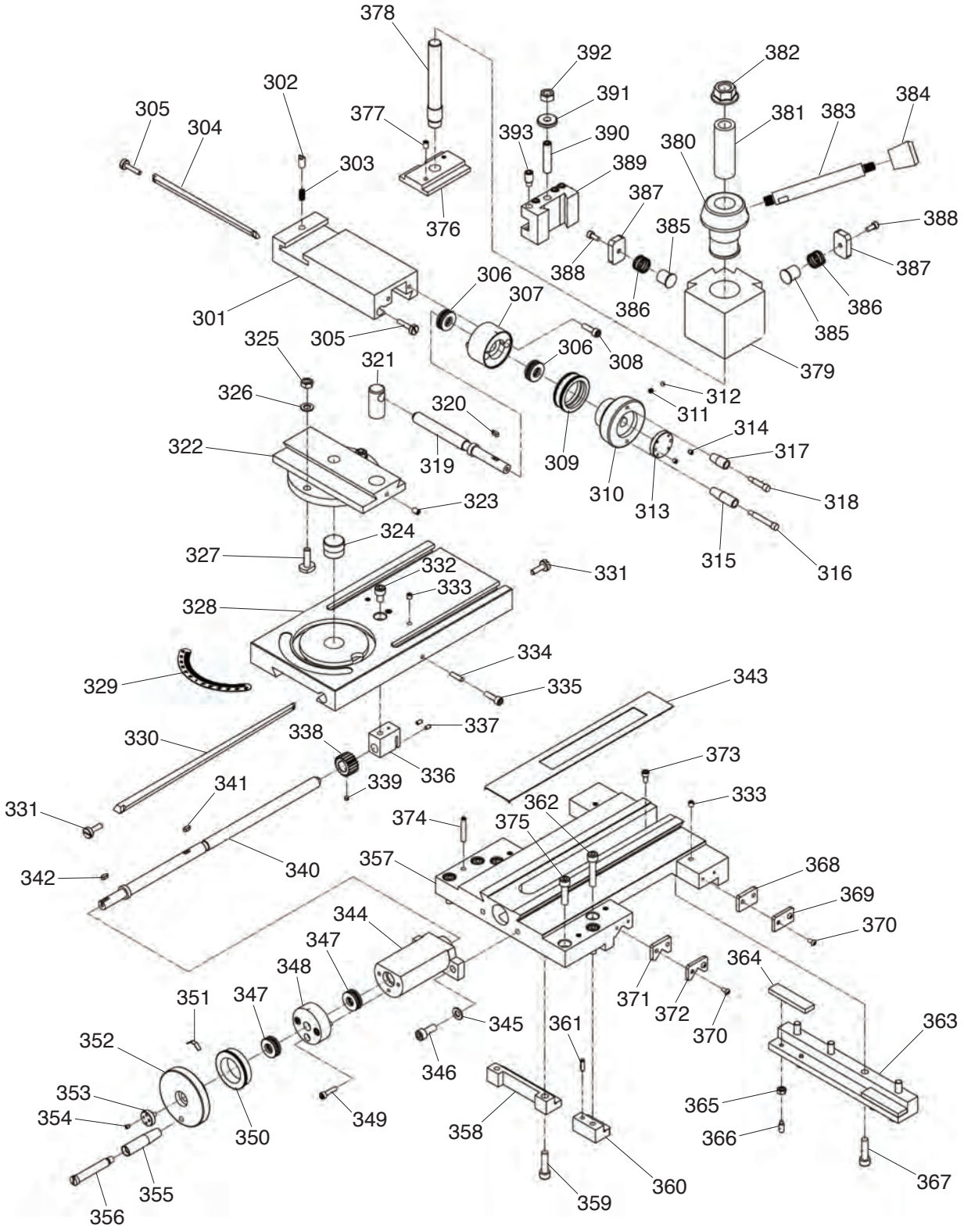

Carriage Parts List

REF	PART #	DESCRIPTION
301	P0949G0301	COMPOUND SLIDE
302	P0949G0302	PLUNGER
303	P0949G0303	COMPRESSION SPRING 0.7 X 7 X 13
304	P0949G0304	COMPOUND SLIDE GIB
305	P0949G0305	GIB SCREW M5-.8 X 30
306	P0949G0306	THRUST BEARING 51101
307	P0949G0307	LEADSCREW BRACKET
308	P0949G0308	CAP SCREW M6-1 X 25
309	P0949G0309	GRADUATED DIAL
310	P0949G0310	HANDWHEEL HUB
311	P0949G0311	COMP SPRING .5 X 3.5 X 12
312	P0949G0312	STEEL BALL 4MM
313	P0949G0313	HUB COVER
314	P0949G0314	SET SCREW M5-.8 X 6
315	P0949G0315	HOLLOW HANDLE 12 X 40, 6
316	P0949G0316	SHOULDER SCREW M7-1.0 X 15, 5 X 50
317	P0949G0317	HOLLOW HANDLE 12 X 25, 6
318	P0949G0318	SHOULDER SCREW M7-1.0 X 10, 5 X 30
319	P0949G0319	LEADSCREW
320	P0949G0320	KEY 4 X 4 X 10 RE
321	P0949G0321	LEADSCREW NUT
322	P0949G0322	SWIVEL SLIDE
323	P0949G0323	SET SCREW M6-1.0 X 8
324	P0949G0324	PIVOT PIN
325	P0949G0325	HEX NUT M8-1.25
326	P0949G0326	FLAT WASHER 8MM
327	P0949G0327	T-BOLT M8-1.25 X 20
328	P0949G0328	CROSS SLIDE
329	P0949G0329	GRADUATED SCALE
330	P0949G0330	GIB
331	P0949G0331	GIB SCREW M5-.8 X 30
332	P0949G0332	CAP SCREW M8-1.25 X 20
333	P0949G0333	BALL OILER 6MM PRESS-IN
334	P0949G0334	ROLL PIN 5 X 15
335	P0949G0335	CAP SCREW M6-1 X 20
336	P0949G0336	LEADSCREW NUT
337	P0949G0337	SET SCREW M4-.7 X 8
338	P0949G0338	GEAR 20T
339	P0949G0339	SET SCREW M5-.8 X 5
340	P0949G0340	LEADSCREW
341	P0949G0341	KEY 4 X 4 X 10 RE
342	P0949G0342	KEY 4 X 4 X 10 RE
343	P0949G0343	CHIP GUARD
344	P0949G0344	SUPPORT HUB
345	P0949G0345	FLAT WASHER 8MM
346	P0949G0346	CAP SCREW M8-1.25 X 20
347	P0949G0347	THRUST BEARING 51101

REF	PART #	DESCRIPTION
348	P0949G0348	BACKING PLATE
349	P0949G0349	CAP SCREW M5-.8 X 20
350	P0949G0350	GRADUATED DIAL
351	P0949G0351	SPRING PLATE
352	P0949G0352	HANDLEWHEEL HUB
353	P0949G0353	HUB COVER
354	P0949G0354	SET SCREW M4-.7 X 6
355	P0949G0355	HOLLOW HANDLE 22 X 65, 10
356	P0949G0356	SHOULDER SCR M8-1.25 X, 10 X 75
357	P0949G0357	SADDLE
358	P0949G0358	GIB SLIDE (LEFT)
359	P0949G0359	CAP SCREW M8-1.25 X 30
360	P0949G0360	GIB SLIDE (RIGHT)
361	P0949G0361	ROLL PIN 5 X 16
362	P0949G0362	GIB SUPPORT SCR M8-1.25 X 40
363	P0949G0363	BACK CLAMP PLATE
364	P0949G0364	GIB STRIP
365	P0949G0365	HEX NUT M6-1
366	P0949G0366	SET SCREW M6-1 X 16
367	P0949G0367	CAP SCREW M8-1.25 X 30
368	P0949G0368	STRAIGHT WAY WIPER
369	P0949G0369	STRAIGHT WIPER CLAMP
370	P0949G0370	BUTTTON HD CAP SCREW M4-.7 X 10
371	P0949G0371	NOTCHED WAY WIPER
372	P0949G0372	NOTCHED WIPER CLAMP
373	P0949G0373	CAP SCREW M5-.8 X 10
374	P0949G0374	TAPER PIN 3 X 35
375	P0949G0375	CAP SCREW M8-1.25 X 30
376	P0949G0376	TOOL POST BASE
377	P0949G0377	SET SCREW M6-1 X 8
378	P0949G0378	TOOL POST SHAFT
379	P0949G0379	KNIFE SEAT
380	P0949G0380	TOOL POST HANDLE HUB
381	P0949G0381	BUSHING
382	P0949G0382	FLANGE NUT M16-2
383	P0949G0383	STUD-DE M10-1.5 X 96, 10RH
384	P0949G0384	KNOB M10-1.5, D32, ROUND
385	P0949G0385	SMALL SHAFT
386	P0949G0386	COMP SPRING 1.2 X 19 X 18
387	P0949G0387	BLOCK
388	P0949G0388	CAP SCREW M5-.8 X 10
389	P0949G0389	KNIFE CLIP
390	P0949G0390	STUD-FT M8-1.25 X 12 LH
391	P0949G0391	KNURLED THUMB NUT M10-1.5
392	P0949G0392	HEX NUT M10-1
393	P0949G0393	SET SCREW M10-1.5 X 20 DOG-PT

Apron

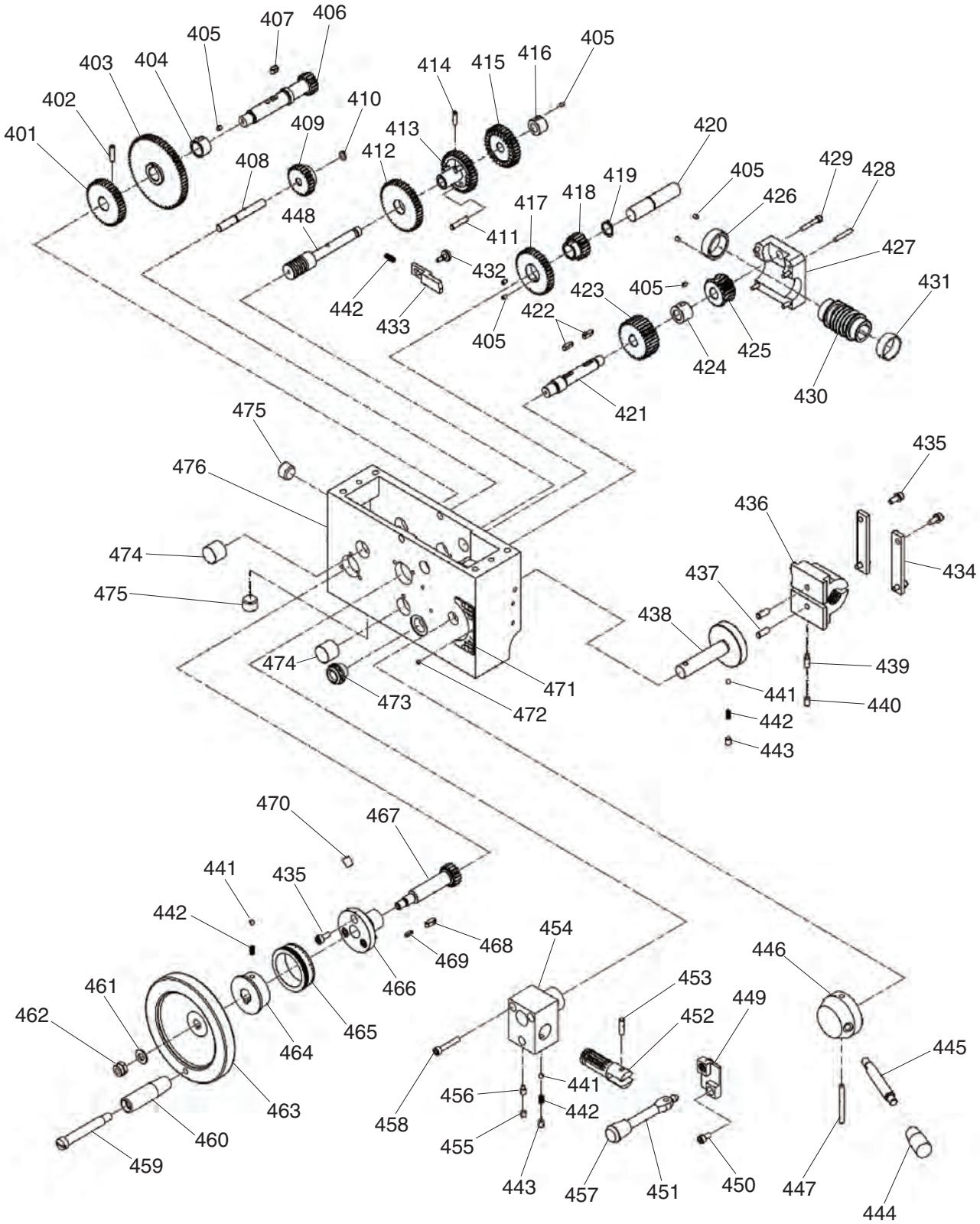

Apron Parts List

REF	PART #	DESCRIPTION
401	P0949G0401	GEAR 40T
402	P0949G0402	ROLL PIN 5 X 20
403	P0949G0403	GEAR 66T
404	P0949G0404	COLLAR
405	P0949G0405	SET SCREW M4-.7 X 8
406	P0949G0406	PINION GEAR SHAFT 17T
407	P0949G0407	KEY 5 X 5 X 10 RE
408	P0949G0408	SHAFT
409	P0949G0409	GEAR 26T
410	P0949G0410	EXT RETAINING RING 8MM
411	P0949G0411	ROLL PIN 5 X 25
412	P0949G0412	GEAR 45T
413	P0949G0413	GEAR 36T
414	P0949G0414	ROLL PIN 4 X 16
415	P0949G0415	GEAR 36T
416	P0949G0416	COLLAR
417	P0949G0417	GEAR 40T
418	P0949G0418	GEAR 20T
419	P0949G0419	EXT RETAINING RING 15MM
420	P0949G0420	SHAFT
421	P0949G0421	WORM SHAFT
422	P0949G0422	KEY 4 X 4 X 14
423	P0949G0423	GEAR 34T
424	P0949G0424	COLLAR
425	P0949G0425	WORM GEAR 17T
426	P0949G0426	COLLAR
427	P0949G0427	WORM BASE
428	P0949G0428	ROLL PIN 4 X 20
429	P0949G0429	CAP SCREW M4-.7 X 25
430	P0949G0430	WORM GEAR
431	P0949G0431	BUSHING 25ID X 28OD X 10L
432	P0949G0432	SHOULDER SCREW M4-.7 X 16
433	P0949G0433	BRACKET
434	P0949G0434	PLATE
435	P0949G0435	CAP SCREW M5-.8 X 12
436	P0949G0436	HALF NUT
437	P0949G0437	ROLL PIN 6 X 16
438	P0949G0438	CAM SHAFT

REF	PART #	DESCRIPTION
439	P0949G0439	SET SCREW M6-1 X 20 DOG-PT
440	P0949G0440	SET SCREW M6-1 X 8
441	P0949G0441	STEEL BALL 5MM
442	P0949G0442	COMPRESSION SPRING 0.7 X 4 X 10
443	P0949G0443	SET SCREW M6-1 X 6
444	P0949G0444	KNOB M8-1.25, D40, TAPERED
445	P0949G0445	STUD-DE M8-1.25 X 12
446	P0949G0446	LEVER HUB
447	P0949G0447	ROLL PIN 5 X 45
448	P0949G0448	SHAFT
449	P0949G0449	BASE
450	P0949G0450	CAP SCREW M5-.8 X 10
451	P0949G0451	HANDLE SHAFT M8 X 90
452	P0949G0452	CAM SHAFT
453	P0949G0453	ROLL PIN 5 X 20
454	P0949G0454	CAM SHAFT BRACKET
455	P0949G0455	SET SCREW M6-1 X 6
456	P0949G0456	SET SCREW M6-1 X 10 DOG-PT
457	P0949G0457	KNOB M8-1.25 25D, ROUND
458	P0949G0458	CAP SCREW M5-.8 X 30
459	P0949G0460	SHOULDER SCR M8-1.25 X, 10 X 75
460	P0949G0459	HOLLOW HANDLE 22 X 65, 10
461	P0949G0461	FLAT WASHER 8MM
462	P0949G0462	HEX NUT M8-1.25
463	P0949G0463	HANDWHEEL TYPE-8 48D X 12B X 8
464	P0949G0464	BUSHING
465	P0949G0465	GRADUATED DIAL
466	P0949G0466	SUPPORT HUB
467	P0949G0467	GEAR SHAFT
468	P0949G0468	KEY 5 X 5 X 14 RE
469	P0949G0469	KEY 3 X 3 X 10 RE
470	P0949G0470	BALL OILER 6MM PRESS-IN
471	P0949G0471	PLATE
472	P0949G0472	RIVET 2.5 X 3MM BLIND
473	P0949G0473	OIL SIGHT GLASS M18-2.5 X 1.5
474	P0949G0474	COLLAR
475	P0949G0475	OIL PLUG 3/8"
476	P0949G0476	APRON CASTING

Steady & Follow Rests

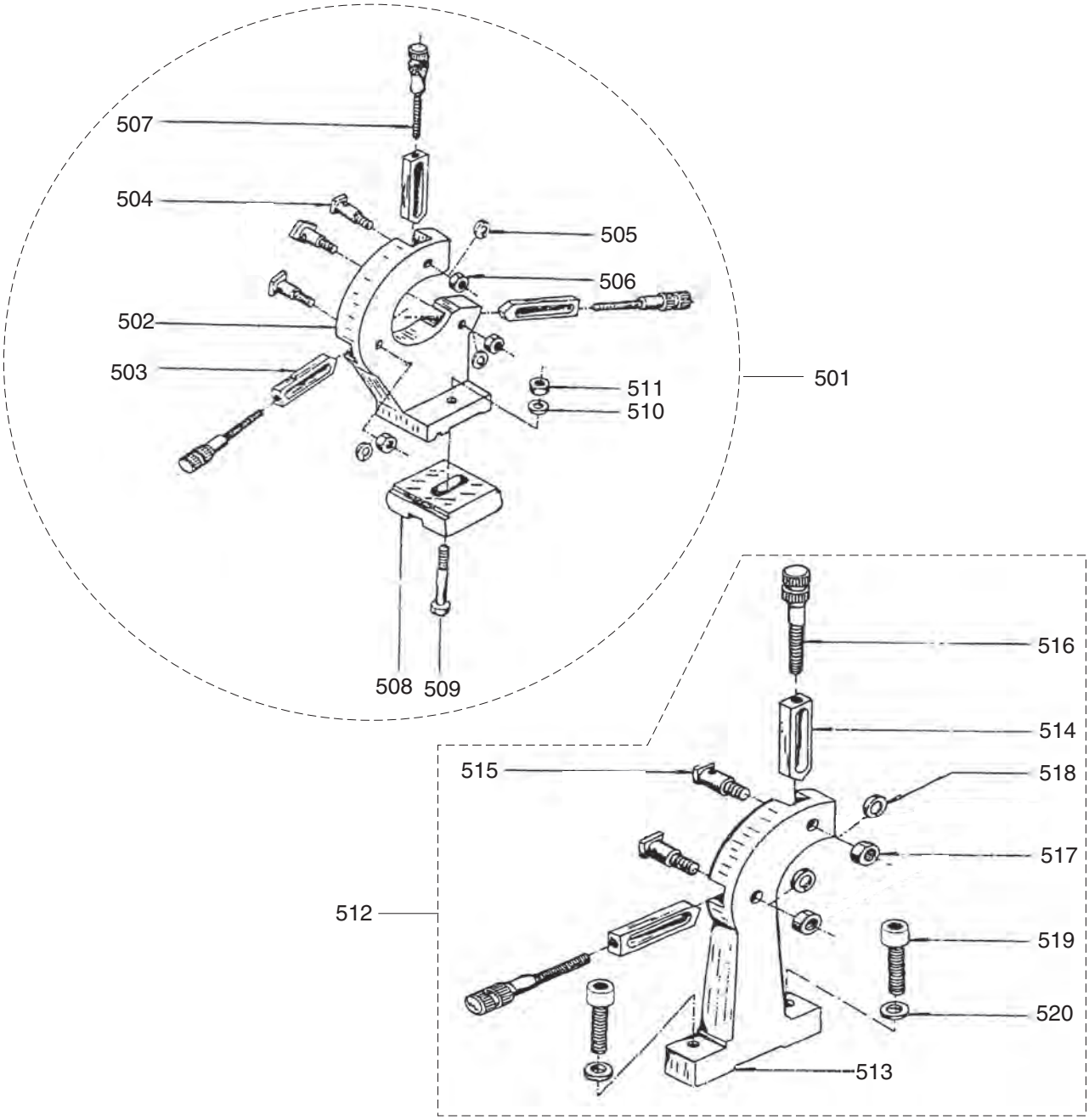

REF	PART #	DESCRIPTION
501	P0949G0501	STEADY REST ASSEMBLY
502	P0949G0502	STEADY REST CASTING
503	P0949G0503	FINGER
504	P0949G0504	SHOULDER SCREW M8-1.25 X 1
505	P0949G0505	LOCK WASHER 6MM
506	P0949G0506	HEX NUT M6-1
507	P0949G0507	ADJUSTING SCREW
508	P0949G0508	CLAMPING PLATE
509	P0949G0509	HEX BOLT M12-1.75 X 65
510	P0949G0510	FLAT WASHER 10MM

REF	PART #	DESCRIPTION
511	P0949G0511	HEX NUT M10-1.5
512	P0949G0512	FOLLOW REST ASSEMBLY
513	P0949G0513	FOLLOW REST CASTING
514	P0949G0514	FINGER
515	P0949G0515	SHOULDER SCREW M8-1.25 X 1
516	P0949G0516	ADJUSTING SCREW
517	P0949G0517	HEX NUT M6-1
518	P0949G0518	LOCK WASHER 6MM
519	P0949G0519	CAP SCREW M8-1.25 X 35
520	P0949G0520	FLAT WASHER 8MM

Tailstock

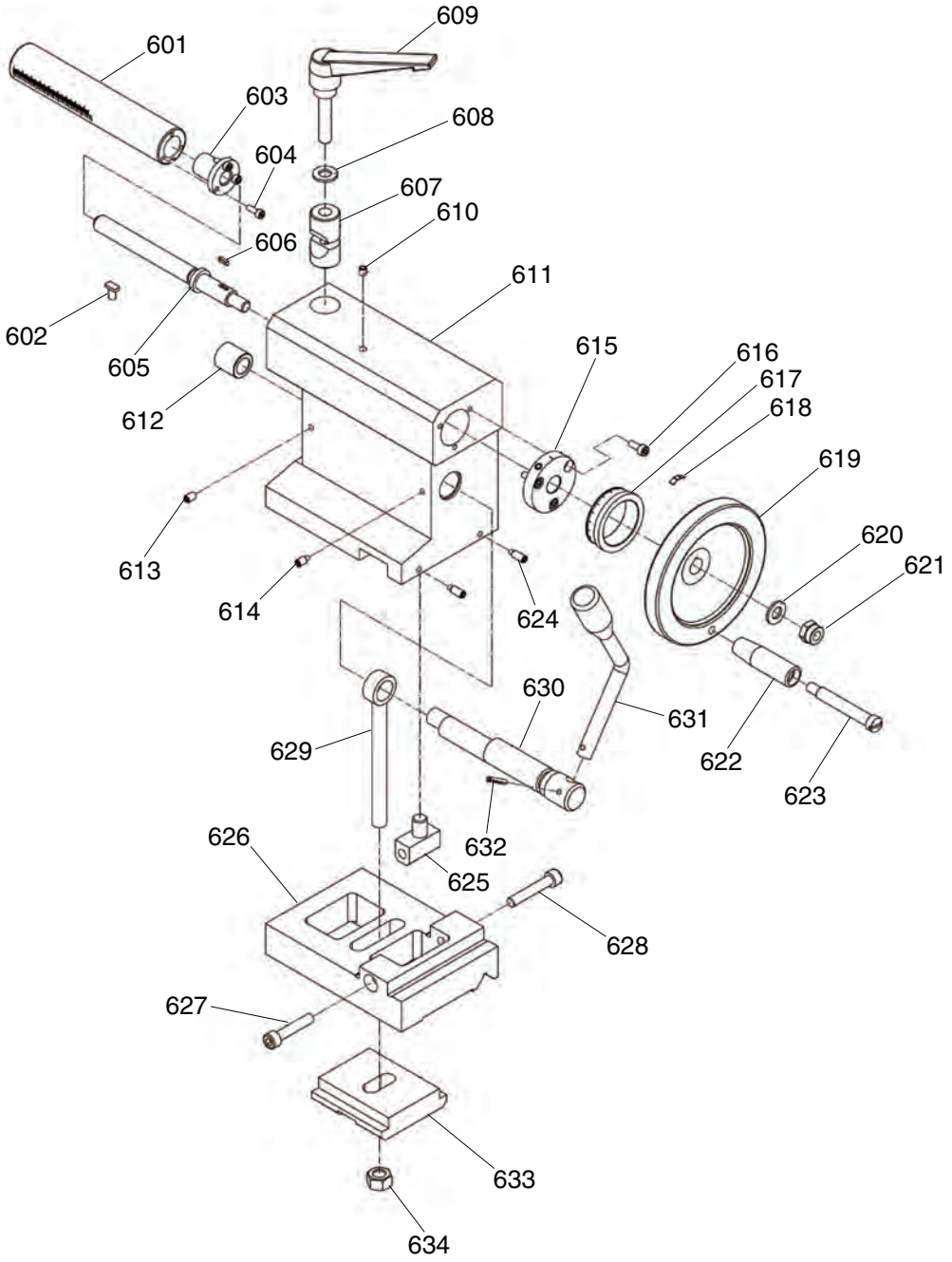

Tailstock Parts List

REF	PART #	DESCRIPTION
601	P0949G0601	TAILSTOCK QUILL MT#3
602	P0949G0602	KEY 2.5 X 6 X 12
603	P0949G0603	FLANGED BUSHING
604	P0949G0604	CAP SCREW M4-.7 X 12
605	P0949G0605	LEADSCREW
606	P0949G0606	KEY 3 X 3 X 10 RE
607	P0949G0607	QULL LOCK SHAFT
608	P0949G0608	FLAT WASHER 10MM
609	P0949G0609	ADJUSTABLE HANDLE M10-1.5 X 50
610	P0949G0610	BALL OILER 6MM PRESS-IN
611	P0949G0611	TAILSTOCK BODY
612	P0949G0612	COLLAR
613	P0949G0613	SET SCREW M6-1 X 10
614	P0949G0614	SET SCREW M6-1 X 10 DOG-PT
615	P0949G0615	FLANGE COVER
616	P0949G0616	CAP SCREW M5-.8 X 12
617	P0949G0617	GRADUATED DIAL

REF	PART #	DESCRIPTION
618	P0949G0618	SPRING PLATE
619	P0949G0619	HANDWHL T-8 125D X 14B X M8-1.25
620	P0949G0620	FLAT WASHER 10MM
621	P0949G0621	HEX NUT M10-1.5
622	P0949G0622	HOLLOW HANDLE 18 X 63, 6
623	P0949G0623	SHOULDER SCR M8-1.25 X 10, 6 X 63
624	P0949G0624	SET SCREW M6-1 X 16 DOG-PT
625	P0949G0625	ADJUSTMENT BLOCK
626	P0949G0626	BASE
627	P0949G0627	CAP SCREW M8-1.25 X 40
628	P0949G0628	CAP SCREW M8-1.25 X 45
629	P0949G0629	LOCK SCREW M12-1.25 X 47
630	P0949G0630	LOCK SHAFT
631	P0949G0631	HANDLE
632	P0949G0632	ROLL PIN 4 X 24
633	P0949G0633	CLAMPING PLATE
634	P0949G0634	HEX NUT M12-1.75

Bed

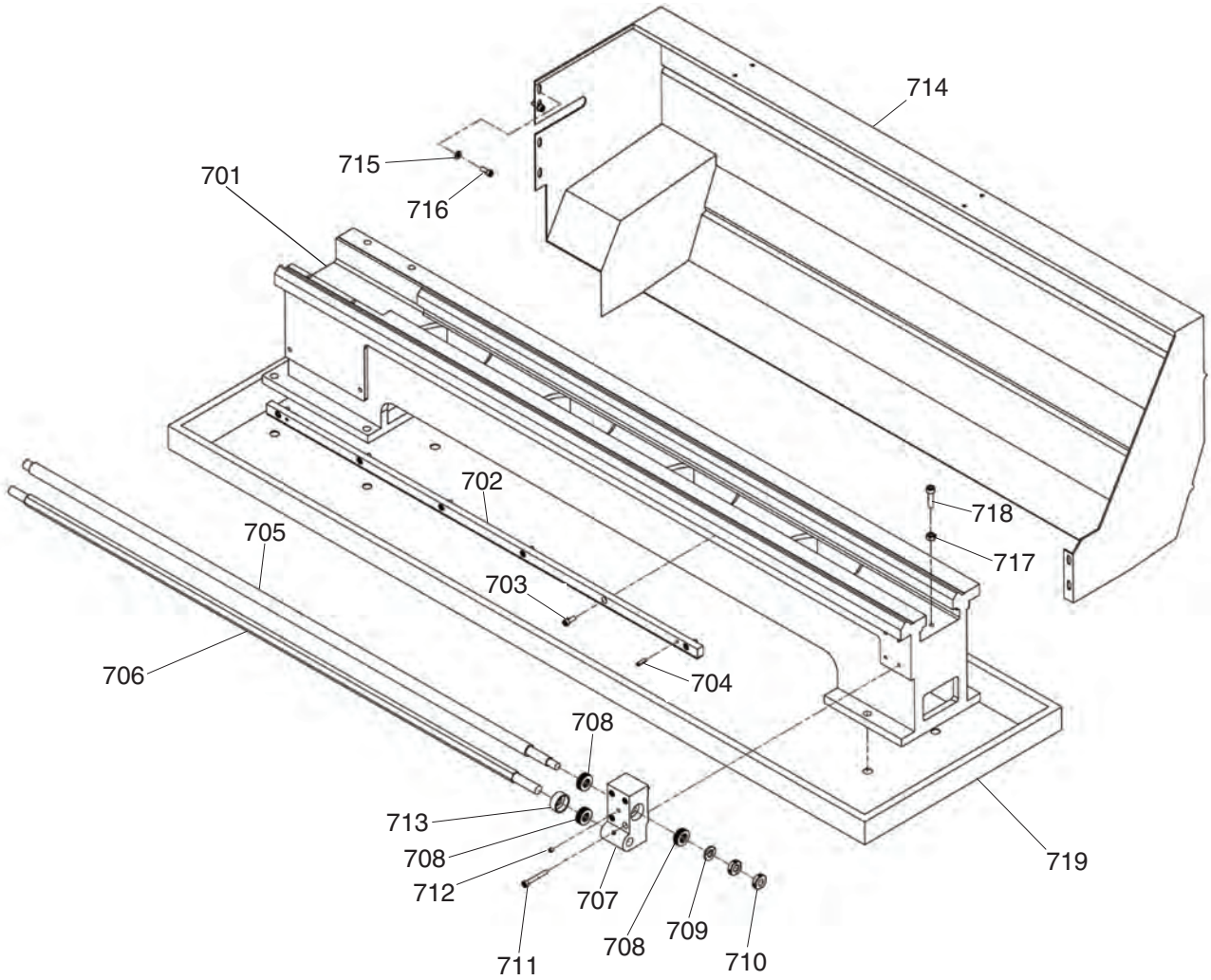

REF	PART #	DESCRIPTION
701	P0949G0701	LATHE BED
702	P0949G0702	RACK
703	P0949G0703	CAP SCREW M6-1 X 16
704	P0949G0704	ROLL PIN 5 X 20
705	P0949G0705	LONGITUDINAL LEADSCREW
706	P0949G0706	FEED ROD
707	P0949G0707	BRACKET HOUSING
708	P0949G0708	THRUST BEARING 51102
709	P0949G0709	FLAT WASHER 12MM
710	P0949G0710	ROUND NUT M12-1.25

REF	PART #	DESCRIPTION
711	P0949G0711	CAP SCREW M6-1 X 45
712	P0949G0712	BALL OILER 6MM PRESS-IN
713	P0949G0713	BEARING SHEATH
714	P0949G0714	SPLASH GUARD
715	P0949G0715	FLAT WASHER 6MM
716	P0949G0716	CAP SCREW M6-1 X 16
717	P0949G0717	HEX NUT M8-1.25
718	P0949G0718	CAP SCREW M8-1.25 X 30
719	P0949G0719	CHIP PAN

Cabinet

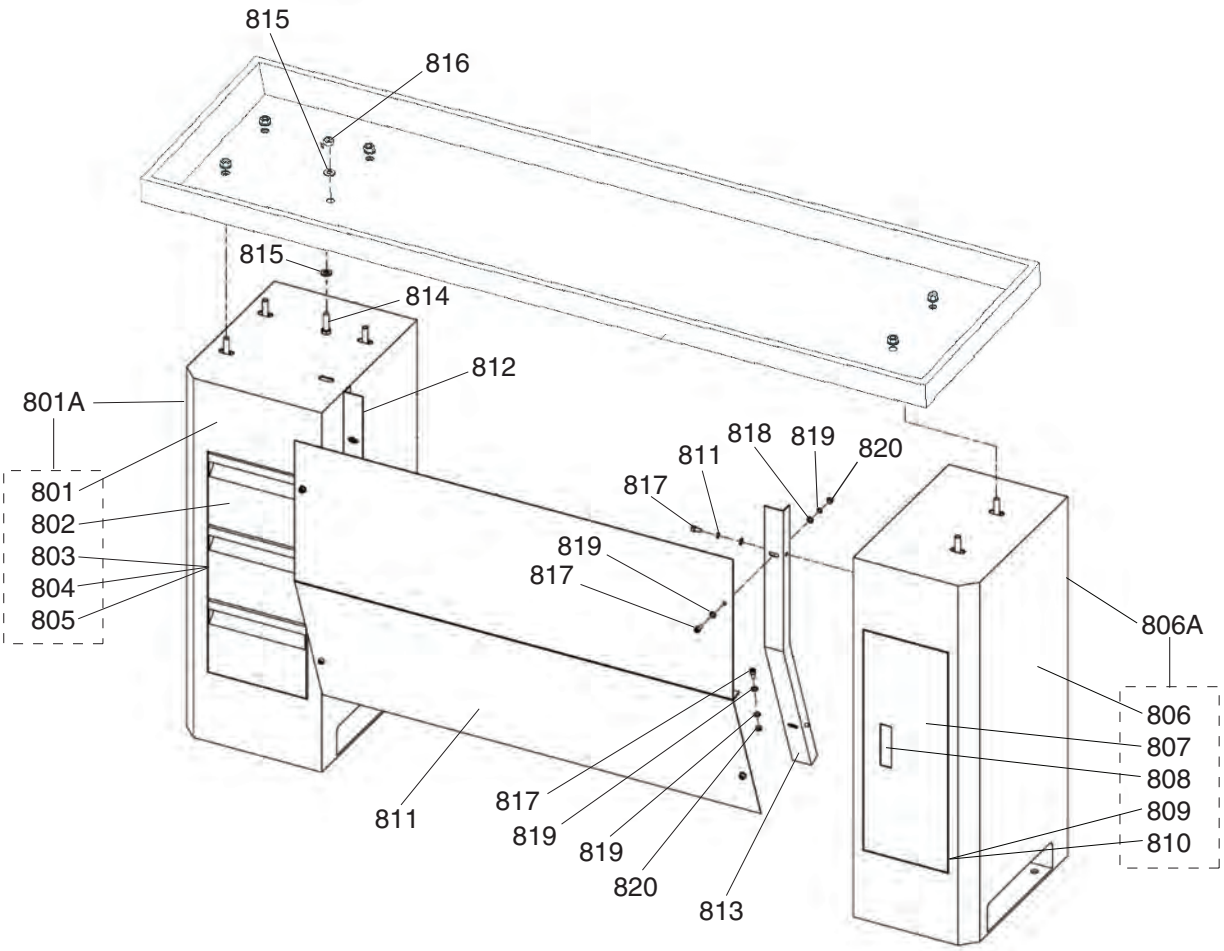

REF	PART #	DESCRIPTION
801A	P0949G0801A	LEFT STAND ASSEMBLY
801	P0949G0801	LEFT STAND
802	P0949G0802	DRAWER
803	P0949G0803	LEFT HAND DRAWER PULL
804	P0949G0804	RIGHT HAND DRAWER PULL
805	P0949G0805	PHLP HD SCR 3 X .5 X 5MM
806A	P0949G0806A	RIGHT STAND ASSEMBLY
806	P0949G0806	RIGHT STAND
807	P0949G0807	DOOR
808	P0949G0808	LATCH
809	P0949G0809	COMPRESSION SPRING 0.7 X 3 X 45

REF	PART #	DESCRIPTION
810	P0949G0810	CURVED PIN 3 X 65
811	P0949G0811	FRONT PLATE
812	P0949G0812	BRACKET (LEFT)
813	P0949G0813	BRACKET (RIGHT)
814	P0949G0814	HEX BOLT M10-1.5 X 40
815	P0949G0815	FLAT WASHER 10MM
816	P0949G0816	HEX NUT M10-1.5
817	P0949G0817	CAP SCREW M6-1 X 14
818	P0949G0818	LOCK WASHER 6MM
819	P0949G0819	FLAT WASHER 6MM
820	P0949G0820	HEX NUT M6-1

Electrical Components

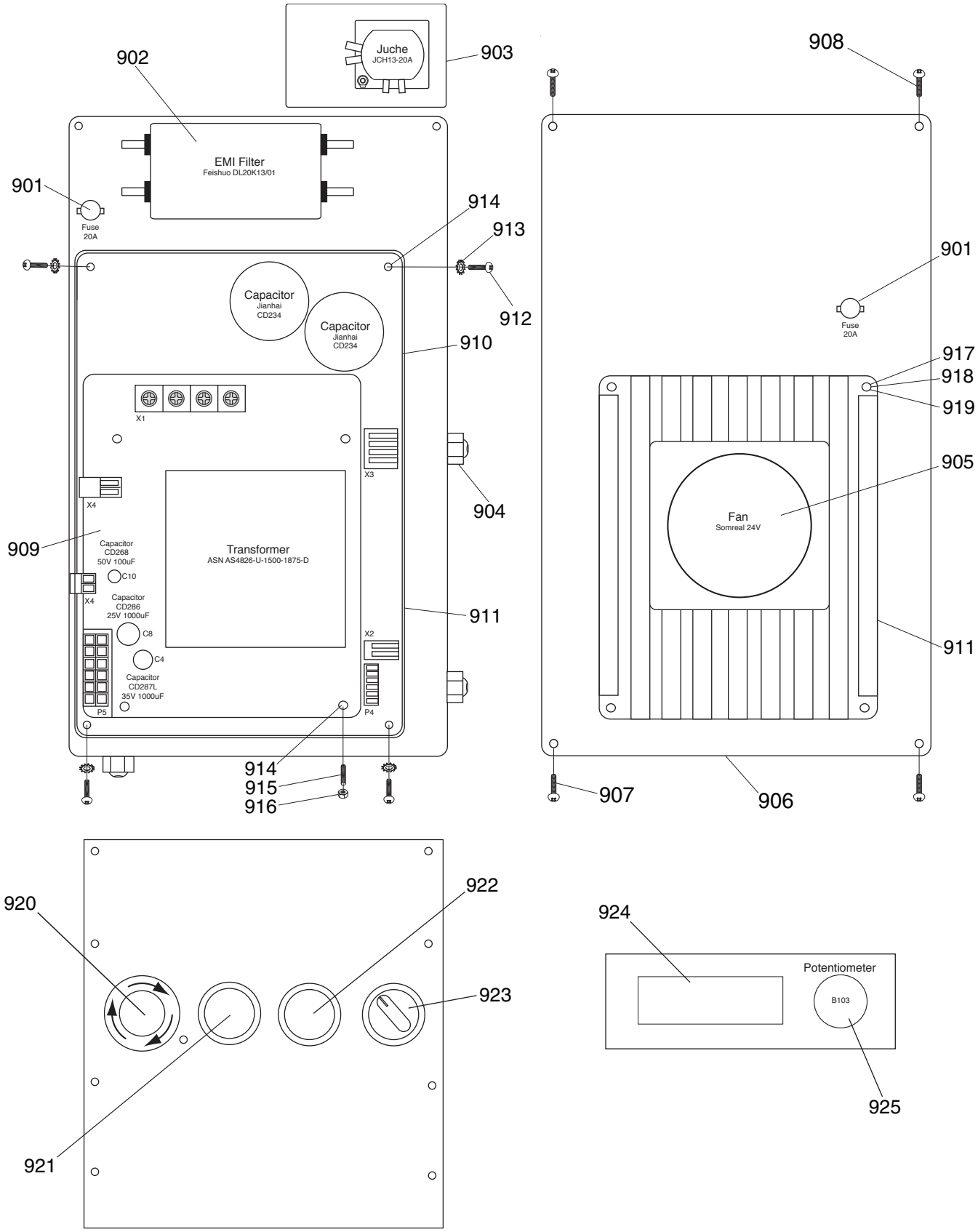

Electrical Components Parts List

REF	PART #	DESCRIPTION
901	P0949G0901	FUSE 20A
902	P0949G0902	EMI FILTER FEISHUO DL20K13/01
903	P0949G0903	MASTER POWER SWITCH JUCHE JCH13-20A
904	P0949G0904	STRAIN RELIEF TYPE-3 M20-1.5 ST PLASTIC
905	P0949G0905	COOLING FAN SOMREAL 24V
906	P0949G0906	ELECTRICAL BOX COVER
907	P0949G0907	PHLP HD SCR M4-.7 X 5
908	P0949G0908	PHLP HD SCR M4-.7 X 10
909	P0949G0909	CIRCUIT BOARD
910	P0949G0910	CIRCUIT BOARD
911	P0949G0911	ALUMINUM HEAT SINK
912	P0949G0912	PHLP HD SCR M2.5-.45 X 5
913	P0949G0913	EXT TOOTH WASHER M2.5

REF	PART #	DESCRIPTION
914	P0949G0914	STANDOFF-FF M2.5-.45 X 10
915	P0949G0915	STANDOFF-MM 2.5-.45 X 10, M2.5-.45 X 5
916	P0949G0916	HEX NUT M2.5-.45
917	P0949G0917	BUTTON HD CAP SCR M2.5-.45 X 10
918	P0949G0918	LOCK WASHER 2.5MM
919	P0949G0919	FLAT WASHER 2.5MM
920	P0949G0920	E-STOP BUTTON MINGER LA125H-BE102C
921	P0949G0921	ON BUTTON MINGER LA252H-BE101C
922	P0949G0922	OFF BUTTON MINGER LA252H-BE102C
923	P0949G0923	SPINDLE SWITCH MINGER LA125H-BE101C
924	P0949G0924	RPM DISPLAY UNIT
925	P0949G0925	POTENTIOMETER B103

Accessories

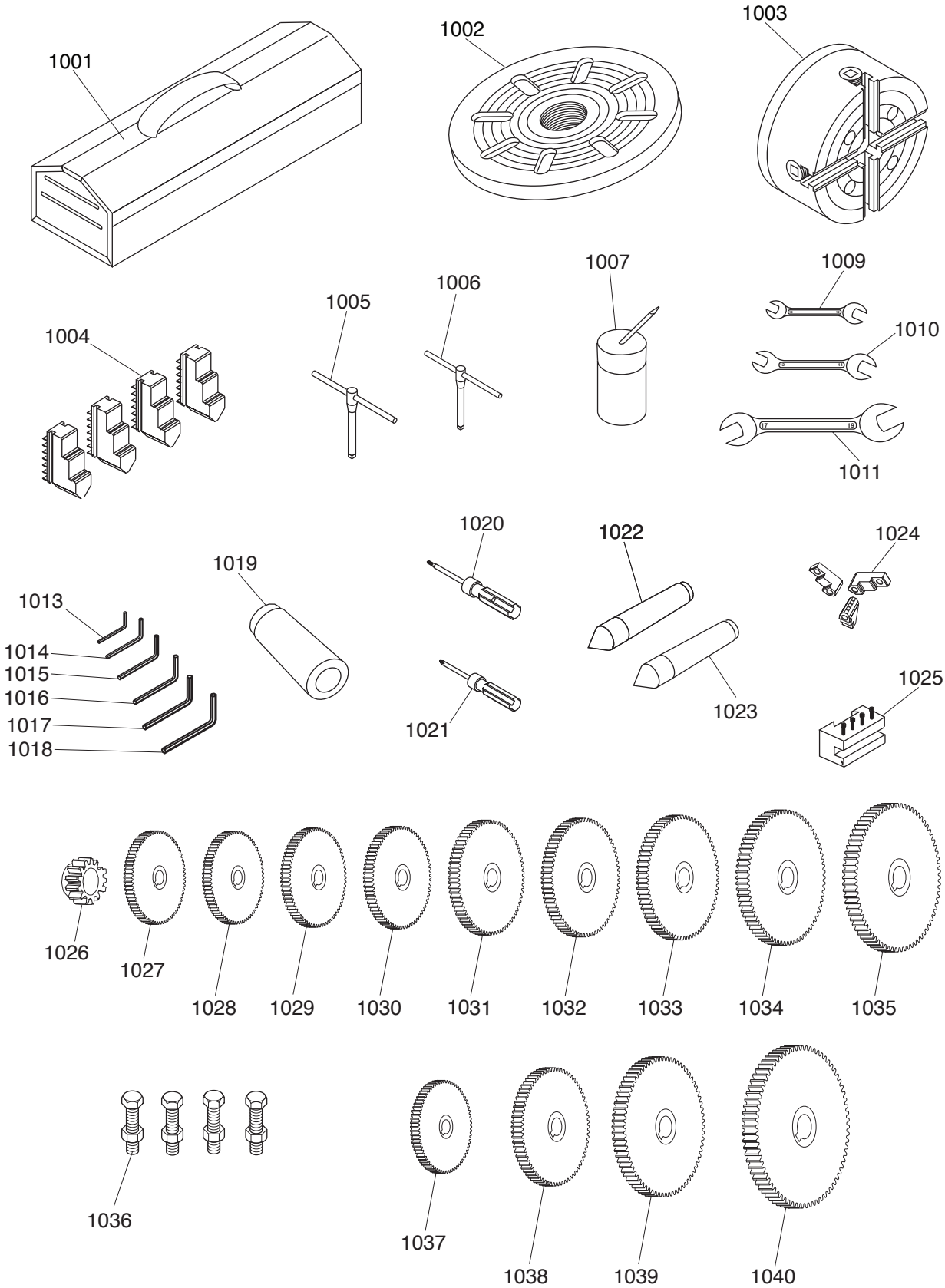

Accessories Parts List

REF	PART #	DESCRIPTION
1001	P0949G1001	TOOL BOX
1002	P0949G1002	FACEPLATE 9-3/8"
1003	P0949G1003	4-JAW CHUCK 6"
1004	P0949G1004	4-JAW CHUCK REVERSIBLE JAWS
1005	P0949G1005	4-JAW CHUCK WRENCH
1006	P0949G1006	3-JAW CHUCK WRENCH 4"
1007	P0949G1007	BOTTLE FOR OIL
1009	P0949G1009	COMBO WRENCH 8 X 10MM
1010	P0949G1010	COMBO WRENCH 12 X 14MM
1011	P0949G1011	COMBO WRENCH 17 X 19MM
1013	P0949G1013	HEX WRENCH 2.5MM
1014	P0949G1014	HEX WRENCH 3MM
1015	P0949G1015	HEX WRENCH 4MM
1016	P0949G1016	HEX WRENCH 5MM
1017	P0949G1017	HEX WRENCH 6MM
1018	P0949G1018	HEX WRENCH 8MM
1019	P0949G1019	SPINDLE SLEEVE MT#5 X MT#3
1020	P0949G1020	SCREWDRIVER PHILLIPS #2
1021	P0949G1021	SCREWDRIVER FLAT 1/4"

REF	PART #	DESCRIPTION
1022	P0949G1022	DEAD CENTER MT#3 HSS
1023	P0949G1023	***USE P0494G1022***
1024	P0949G1024	3-JAW CHUCK REVERSIBLE JAWS
1025	P0949G1025	TOOL HOLDER 200-SERIES
1026	P0949G1026	CHANGE GEAR 25T
1027	P0949G1027	CHANGE GEAR 30T
1028	P0949G1028	CHANGE GEAR 40T
1029	P0949G1029	CHANGE GEAR 50T
1030	P0949G1030	CHANGE GEAR 55T
1031	P0949G1031	CHANGE GEAR 60T
1032	P0949G1032	CHANGE GEAR 63T
1033	P0949G1033	CHANGE GEAR 65T
1034	P0949G1034	CHANGE GEAR 70T
1035	P0949G1035	CHANGE GEAR 75T
1036	P0949G1036	SPIDER BOLT M8-1 X 25
1037	P0949G1037	CHANGE GEAR 20T
1038	P0949G1038	CHANGE GEAR 45T
1039	P0949G1039	CHANGE GEAR 80T
1040	P0949G1040	CHANGE GEAR 90T

Labels & Cosmetics (Front)

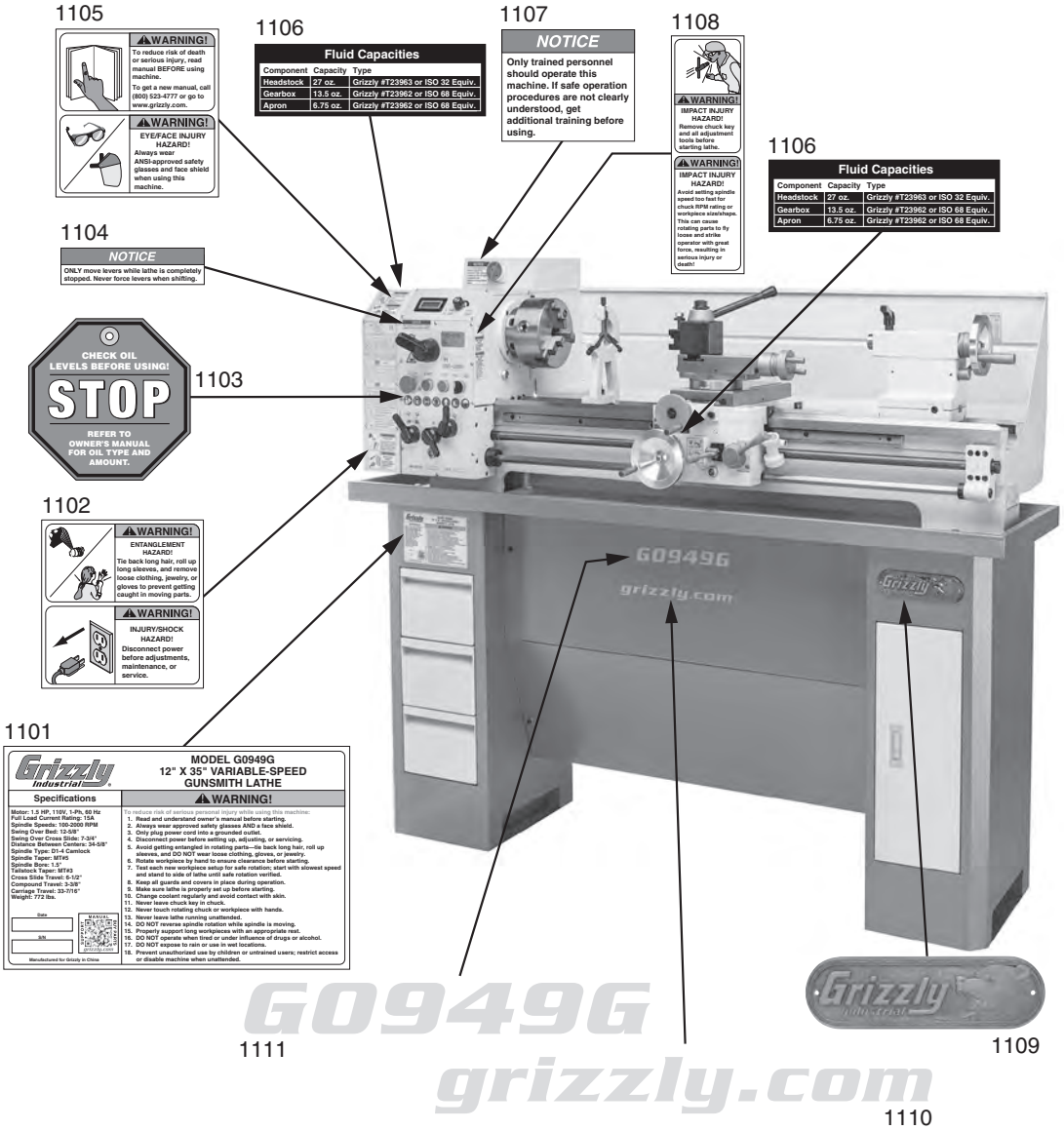

REF	PART #	DESCRIPTION
1101	P0949G1101	MACHINE ID LABEL
1102	P0949G1102	COMBO WARNING LABEL
1103	P0949G1103	STOP OIL FILL LABEL
1104	P0949G1104	MOVE LEVERS NOTICE LABEL
1105	P0949G1105	COMBO WARNING LABEL
1106	P0949G1106	FLUID CAPACITIES LABEL

REF	PART #	DESCRIPTION
1107	P0949G1107	NOTICE ONLY TRAINED PERSONNEL
1108	P0949G1108	COMBO WARNING LABEL
1109	P0949G1109	GRIZZLY OBLONG NAMEPLATE SMALL
1110	P0949G1110	GRIZZLY.COM LABEL
1111	P0949G1111	MODEL NUMBER LABEL

Labels & Cosmetics (Rear)

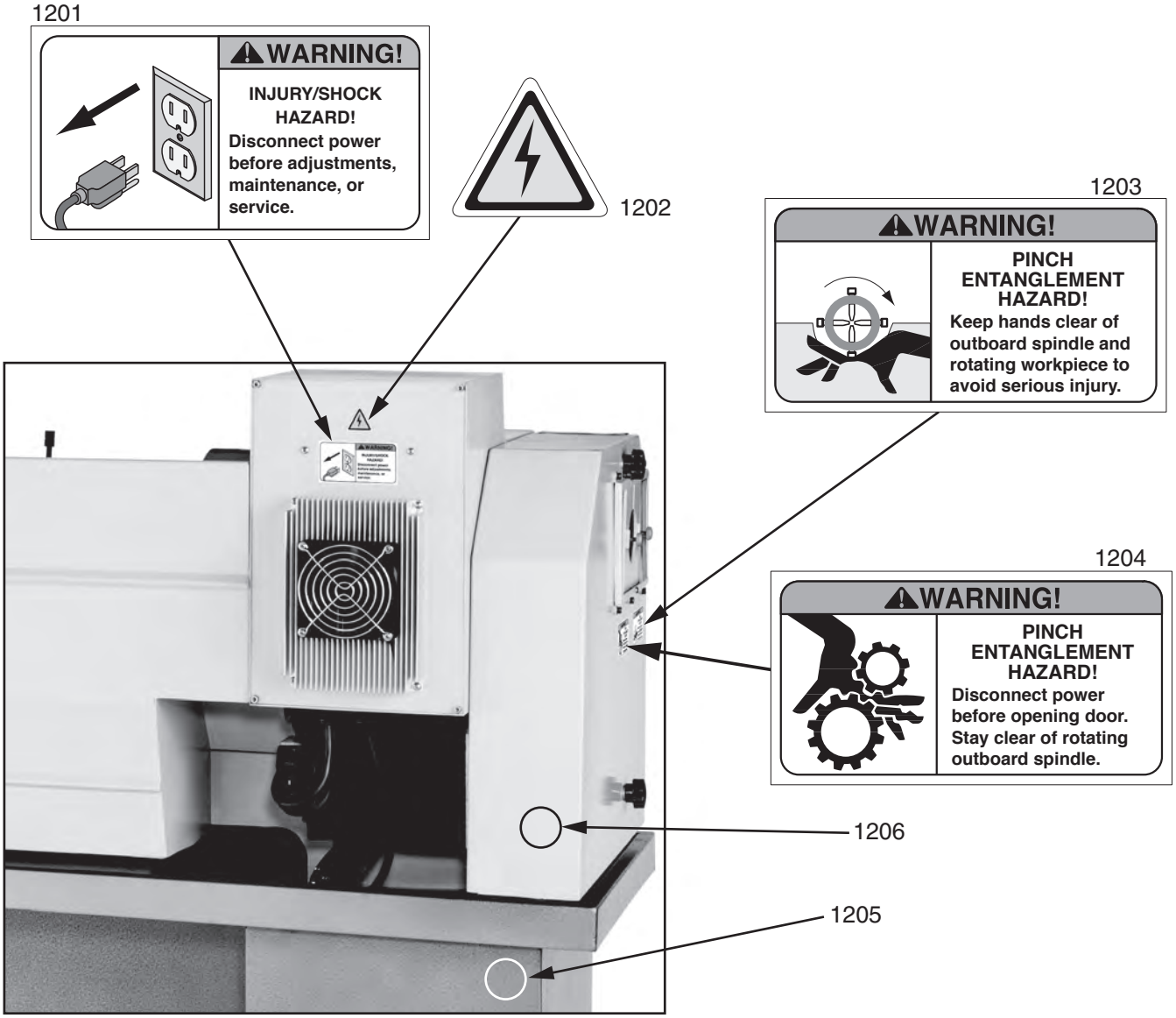

REF	PART #	DESCRIPTION
1201	P0949G1201	INJURY/SHOCK HAZARD LABEL
1202	P0949G1202	ELECTRICITY LABEL
1203	P0949G1203	PINCH ENTANGLEMENT HAZARD LABEL

REF	PART #	DESCRIPTION
1204	P0949G1204	PINCH ENTANGLEMENT HAZARD LABEL
1205	P0949G1205	TOUCH-UP PAINT, GRIZZLY GREEN
1206	P0949G1206	TOUCH-UP PAINT, GRIZZLY PUTTY

WARNING

Safety labels help reduce the risk of serious injury caused by machine hazards. If any label comes off or becomes unreadable, the owner of this machine MUST replace it in the original location before resuming operations. For replacements, contact (800) 523-4777 or www.grizzly.com.

Change Gear System

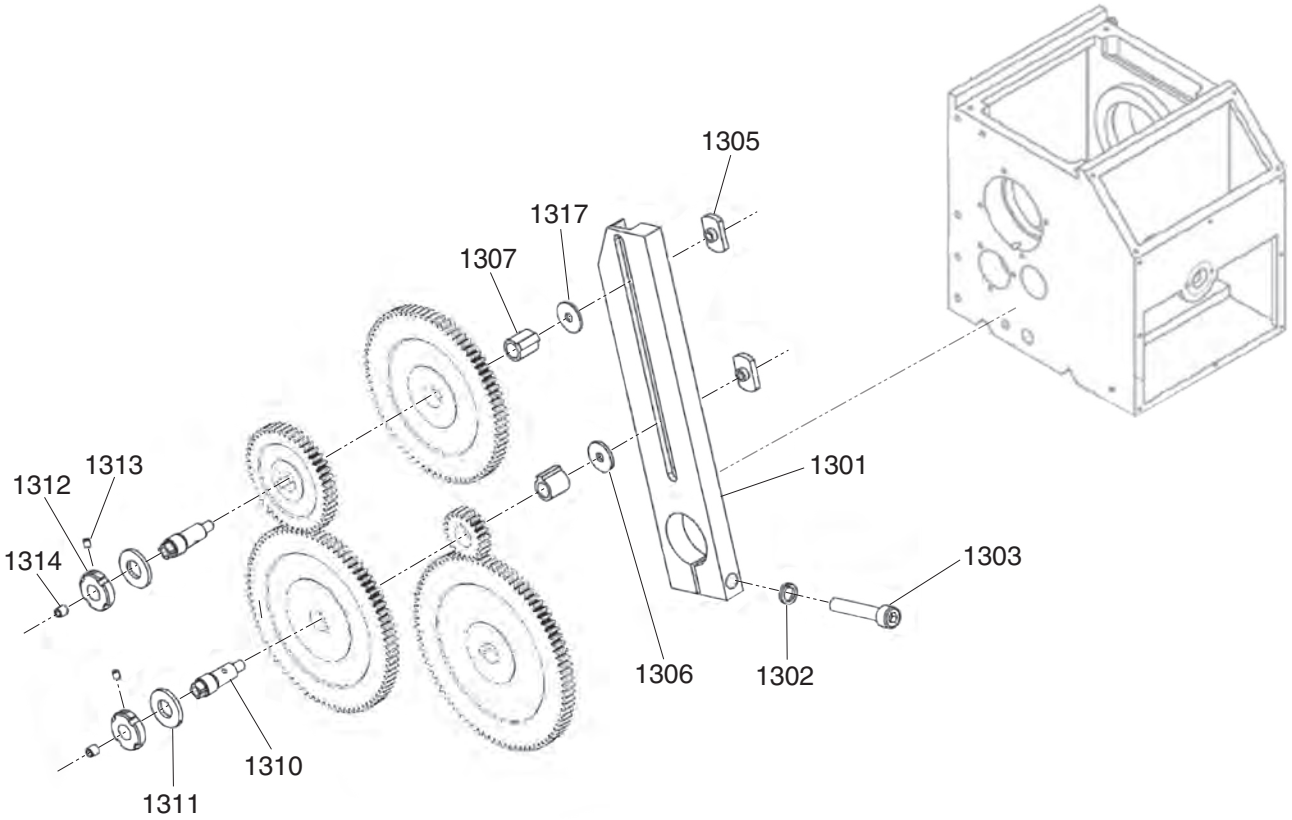

REF	PART #	DESCRIPTION
1301	P0949G1301	CHANGE GEAR BRACKET
1302	P0949G1302	LOCK WASHER 8MM
1303	P0949G1303	CAP SCREW M8-1.25 X 45
1305	P0949G1305	T-NUT M6-1
1306	P0949G1306	FENDER WASHER 6 X 20 X 2.4
1307	P0949G1307	KEYED BUSHING 10ID X 14OD X 15L

REF	PART #	DESCRIPTION
1310	P0949G1310	CHANGE GEAR SHAFT
1311	P0949G1311	FENDER WASHER 13 X 24.75 X 2.65
1312	P0949G1312	SPANNER NUT M12-1.25
1313	P0949G1313	SET SCREW M4-.7 X 6
1314	P0949G1314	BALL OILER 6MM PRESS-IN
1317	P0949G1317	FLAT WASHER 10MM

G0949G Charts

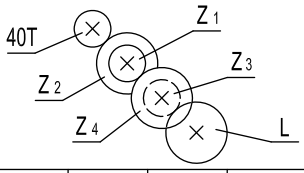

Z1 – Z4	Z2 – Z3 – L	45 – 80 – 80 – 20 – H – 90	45 – 75 – 70 – 20 – H – 90	45 – 75 – 70 – 25 – H – 90	45 – 75 – 80 – 30 – H – 90	45 – 75 – 70 – 30 – H – 90
in	C	0.0025	0.003	0.0038	0.004	0.0045
	A	0.005	0.006	0.0075	0.008	0.009
	B	0.01	0.012	/	/	/
in	C	/	/	/	/	/
	A	0.0015	0.0019	0.0024	0.0025	0.0028
	B	0.003	0.0038	0.0048	0.005	0.0056

mm

Z1 Z2 – Z4 Z3 – L	70 80 – 55 30 – H 75	63 75 – 80 45 – H 60	H 40 – 63 80 – 80 H	45 50 – 80 63 – H 60	70 80 – 80 63 – H 50
C	0.4	0.5	/	0.75	/
A	0.8	1.0	1.25	1.5	1.75
B	/	2.0	2.5	3.0	3.5

n/1"

Z1 Z2 – Z4 Z3 – L	H 70 – 45 40 – 90 H	H 70 – 50 75 – 60 H	H 70 – 40 50 – 80 H	H 70 – 40 55 – 80 H	H 55 – 50 75 – 80 H	H 80 – 30 60 – 65 H	H 60 – 40 70 – 80 H
B	8	9	10	11	12	13	14
A	16	18	20	22	24	26	28
C	32	36	40	44	48	52	56

Figure 134. Thread Feed Chart.

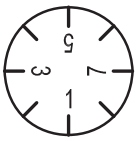

THREAD DIAL

T.P.I.	DIAL
8 10 12	1 - 8
14 16 18	1 - 8
20 22 24	1 - 8
26 28 32	1 - 8
36 40 44	1 - 8
48 52 56	1 - 8
9 11 13	1、3、5、7

Figure 135. Thread Dial Chart.

WARRANTY & RETURNS

Grizzly Industrial, Inc. warrants every product it sells for a period of **1 year** to the original purchaser from the date of purchase. This warranty does not apply to defects due directly or indirectly to misuse, abuse, negligence, accidents, repairs or alterations or lack of maintenance. This is Grizzly's sole written warranty and any and all warranties that may be implied by law, including any merchantability or fitness, for any particular purpose, are hereby limited to the duration of this written warranty. We do not warrant or represent that the merchandise complies with the provisions of any law or acts unless the manufacturer so warrants. In no event shall Grizzly's liability under this warranty exceed the purchase price paid for the product and any legal actions brought against Grizzly shall be tried in the State of Washington, County of Whatcom.

We shall in no event be liable for death, injuries to persons or property or for incidental, contingent, special, or consequential damages arising from the use of our products.

The manufacturers reserve the right to change specifications at any time because they constantly strive to achieve better quality equipment. We make every effort to ensure that our products meet high quality and durability standards and we hope you never need to use this warranty.

In the event you need to use this warranty, contact us by mail or phone and give us all the details. We will then issue you a "Return Number," which must be clearly posted on the outside as well as the inside of the carton. We will not accept any item back without this number. Proof of purchase must accompany the merchandise.

Please feel free to write or call us if you have any questions about the machine or the manual.

Thank you again for your business and continued support. We hope to serve you again soon.

To take advantage of this warranty, you must register it at **https://www.grizzly.com/forms/warranty**, or you can scan the QR code below to be automatically directed to our warranty registration page. Enter all applicable information for the product.

WARRANTY

grizzly.com