READ THIS FIRST

Model G1033X

******IMPORTANT UPDATE******

For Machines Mfd. Since 07/22
and Owner's Manual Revised 09/19

For questions or help with this product contact Tech Support at (570) 546-9663 or techsupport@grizzly.com

The following changes were recently made since the owner's manual was printed:

- Switch box and switch pedestal have been modified.
- An additional step has been included in **Assembly**.

Aside from this information, all other content in the owner's manual applies and MUST be read and understood for your own safety. **IMPORTANT: Keep this update with the owner's manual for future reference.**

For questions or help, contact our Tech Support at (570) 546-9663 or techsupport@grizzly.com.

Revised Parts

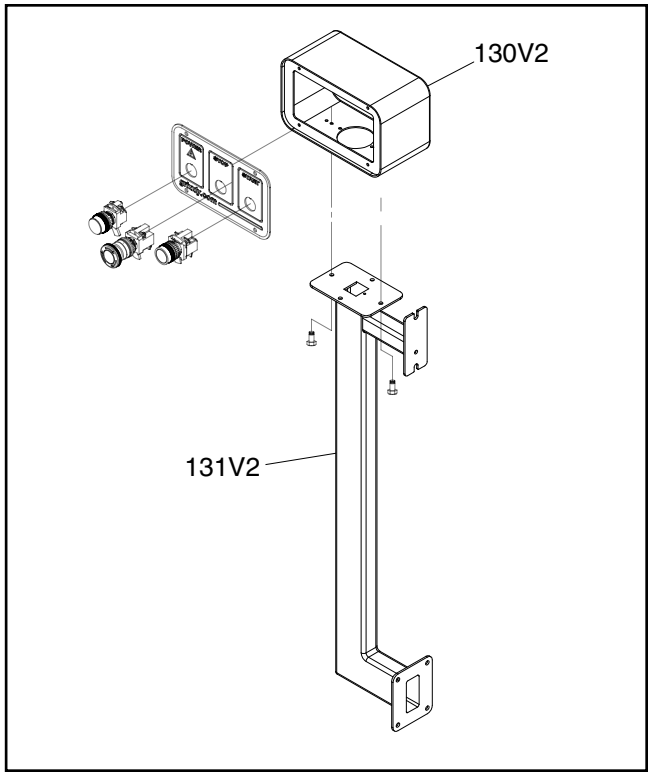

REF	PART #	DESCRIPTION
130V2	P1033X130V2	SWITCH BOX V2.07.22
131V2	P1033X131V2	SWITCH PEDESTAL V2.07.22

Revised Assembly

Please follow the **Assembly** instructions in your **Owner's Manual**, beginning on **Page 17**. Due to changes to the switch box and switch pedestal, the G1033X now requires an additional step.

9. **G1033X Only:** Remove (2) M5-.8 x 10 Phillips head screws from base of switch box, and rotate box 90 degrees so control panel faces front of machine. Re-install switch box to switch pedestal using Phillips head screws.

C US
175370

COPYRIGHT © MARCH, 2022 BY GRIZZLY INDUSTRIAL, INC.
WARNING: NO PORTION OF THIS MANUAL MAY BE REPRODUCED IN ANY SHAPE OR FORM WITHOUT THE WRITTEN APPROVAL OF GRIZZLY INDUSTRIAL, INC.
#SS22229 PRINTED IN TAIWAN

READ THIS FIRST

Model G1033X/G1033Z

******IMPORTANT UPDATE******

For Machines Mfd. Since 11/20
and Owner's Manual Revised 09/19

For questions or help with this product contact Tech Support at (570) 546-9663 or techsupport@grizzly.com

The following change was recently made since the owner's manual was printed:

- Flat washers have been added for mounting the extension tables.

Aside from this information, all other content in the owner's manual applies and MUST be read and understood for your own safety. **IMPORTANT: Keep this update with the owner's manual for future reference.**

For questions or help, contact our Tech Support at (570) 546-9663 or techsupport@grizzly.com.

Revised Inventory

G1033X/G1033Z (Figures 7–8) **Qty**

X. Flat Washers 8mm 6

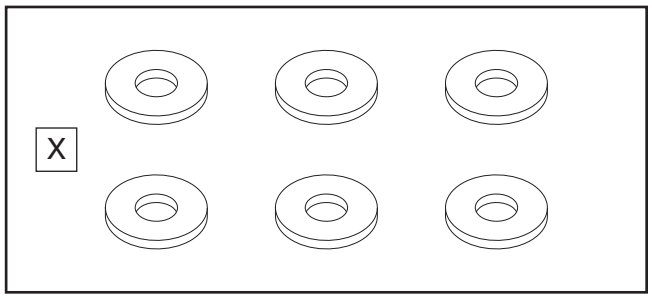

Figure 8. Tools and hardware (G1033X & G1033Z).

Revised Assembly

Please follow the **Assembly** instructions in your **Owner's Manual**, beginning on **Page 17**. Due to changes made to the G1033X/G1033Z, **Step 1** (shown below) must be substituted for **Step 1** shown in the manual.

1. **G1033X & G1033Z:** Attach each cast-iron extension table to planer table with (3) M8-1.25 x 25 hex bolts and (3) 8mm flat washers (see **Figure 12**). Do not fully tighten hex bolts at this time.

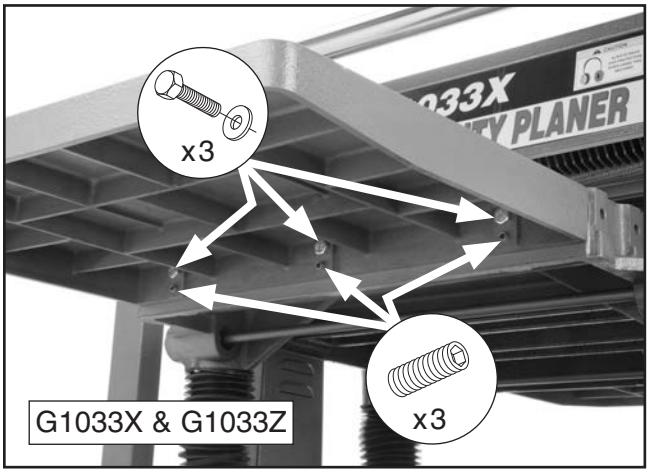

Figure 12. Extension table mounting locations.

COPYRIGHT © JUNE, 2021 BY GRIZZLY INDUSTRIAL, INC.
WARNING: NO PORTION OF THIS MANUAL MAY BE REPRODUCED IN ANY SHAPE OR FORM WITHOUT THE WRITTEN APPROVAL OF GRIZZLY INDUSTRIAL, INC.
#MN21981 PRINTED IN TAIWAN

G1033X Revised Parts

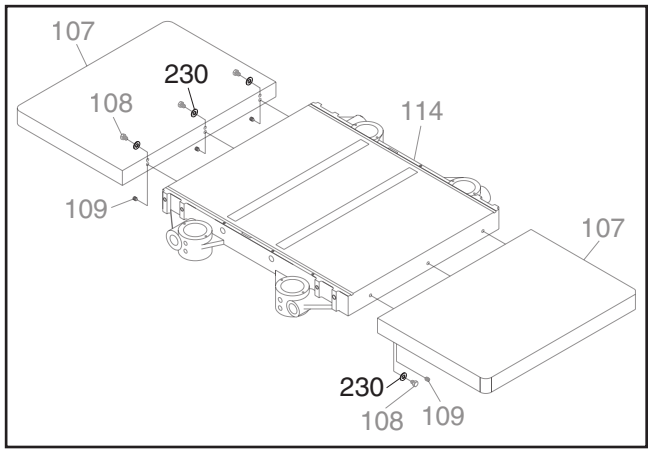

REF	PART #	DESCRIPTION
230	P1033X230	FLAT WASHER 8MM

G1033Z Revised Parts

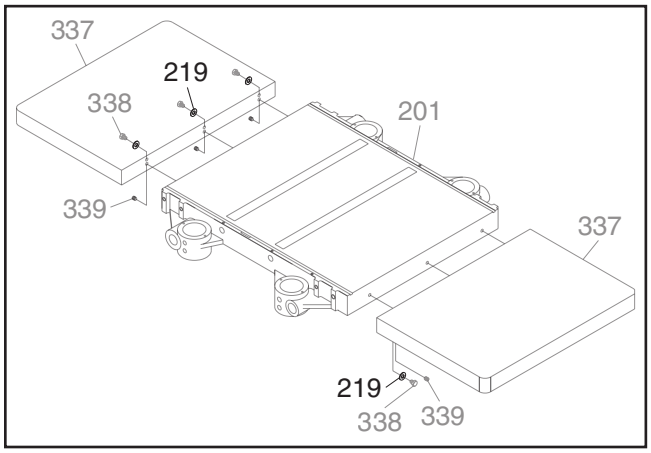

REF	PART #	DESCRIPTION
219	P1033Z219	FLAT WASHER 8MM

MODEL G1033, G1033X & G1033Z
20" PLANERS
OWNER'S MANUAL
(For models manufactured since 04/19)

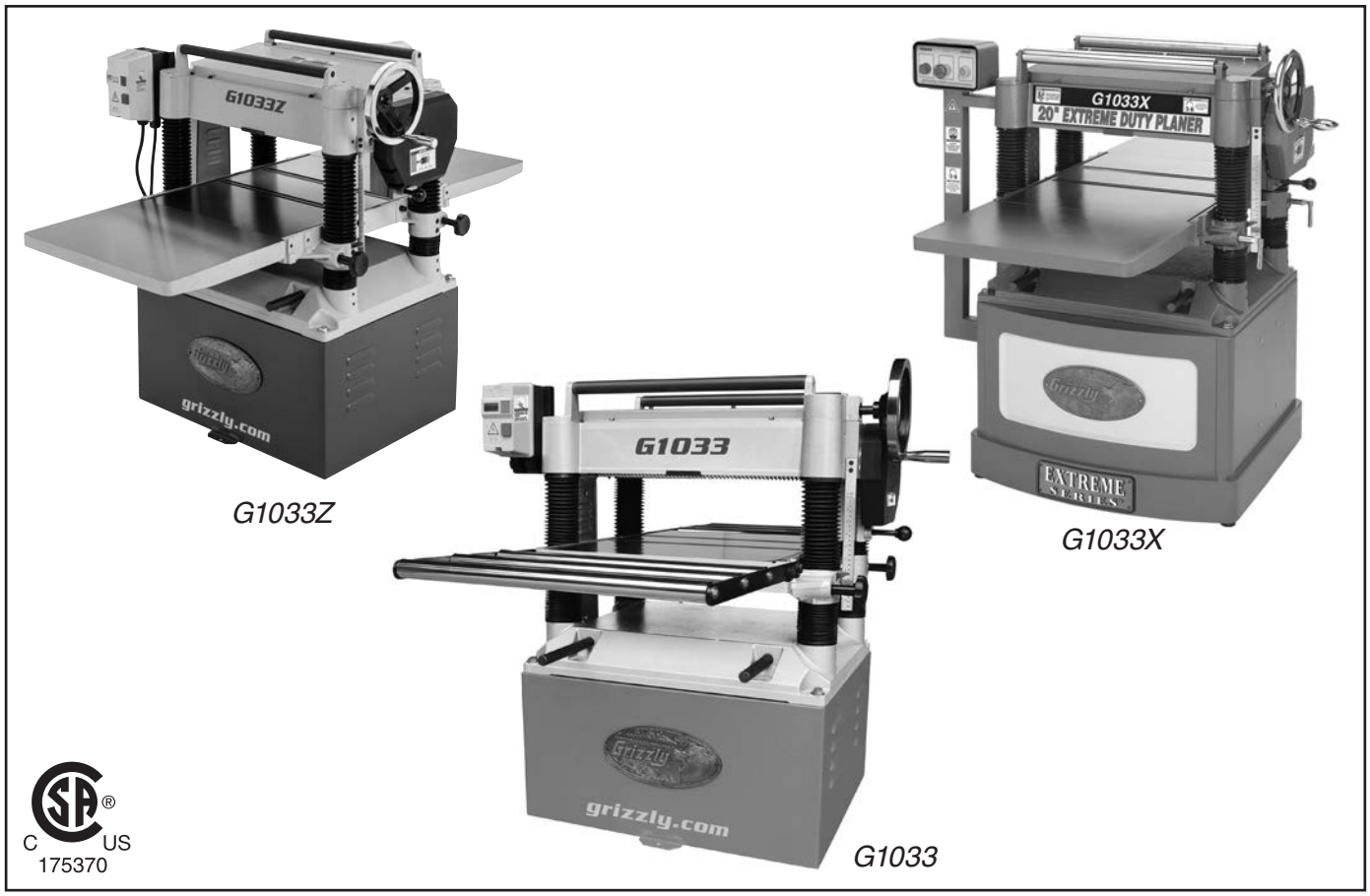

G1033Z

G1033X

G1033

COPYRIGHT © FEBRUARY, 2006 BY GRIZZLY INDUSTRIAL, INC., REVISED SEPTEMBER, 2019 (JL)
WARNING: NO PORTION OF THIS MANUAL MAY BE REPRODUCED IN ANY SHAPE OR FORM WITHOUT THE WRITTEN APPROVAL OF GRIZZLY INDUSTRIAL, INC.
#WKBL7969 PRINTED IN TAIWAN V4.04.19

⚠ WARNING!

This manual provides critical safety instructions on the proper setup, operation, maintenance, and service of this machine/tool. Save this document, refer to it often, and use it to instruct other operators.

Failure to read, understand and follow the instructions in this manual may result in fire or serious personal injury—including amputation, electrocution, or death.

The owner of this machine/tool is solely responsible for its safe use. This responsibility includes but is not limited to proper installation in a safe environment, personnel training and usage authorization, proper inspection and maintenance, manual availability and comprehension, application of safety devices, cutting/sanding/grinding tool integrity, and the usage of personal protective equipment.

The manufacturer will not be held liable for injury or property damage from negligence, improper training, machine modifications or misuse.

⚠ WARNING!

Some dust created by power sanding, sawing, grinding, drilling, and other construction activities contains chemicals known to the State of California to cause cancer, birth defects or other reproductive harm. Some examples of these chemicals are:

- **Lead from lead-based paints.**
- **Crystalline silica from bricks, cement and other masonry products.**
- **Arsenic and chromium from chemically-treated lumber.**

Your risk from these exposures varies, depending on how often you do this type of work. To reduce your exposure to these chemicals: Work in a well ventilated area, and work with approved safety equipment, such as those dust masks that are specially designed to filter out microscopic particles.

Table of Contents

INTRODUCTION 2
Contact Info 2
Machine Description 2
Manual Accuracy 2
Identification 3
Controls & Components 4
Internal Components 5
Machine Data Sheet 6

SECTION 1: SAFETY 8
Safety Instructions for Machinery 8
Additional Safety for Planers 10

SECTION 2: POWER SUPPLY 11

SECTION 3: SETUP 13
Needed for Setup 13
Unpacking 13
Inventory 14
Site Considerations 16
Lifting & Placing 17
Assembly 17
Dust Collection 19
Checking Gearbox Oil Level 19
Test Run 20
Recommended Adjustments 20

SECTION 4: OPERATIONS 21
Operation Overview 21
Workpiece Inspection 22
Wood Types 22
Planing Tips 23
Cutting Problems 23
Depth of Cut 24
Bed Roller Height 25
Setting Feed Rate 26
Adjusting/Replacing Knives (G1033 & G1033Z) 26
Rotating/Replacing Cutterhead Inserts (G1033X) 29

SECTION 5: ACCESSORIES 30

SECTION 6: MAINTENANCE 32
Schedule 32
Cleaning & Protecting 32
Lubrication 32

SECTION 7: SERVICE 35
Troubleshooting 35
Tensioning/Replacing V-Belts 38
Setting Feed Roller, Chip Breaker & Pressure Bar Heights 39
Adjusting Feed-Roller Spring Tension 43
Positioning Chip Deflector 43
Calibrating Table Height Scale 44
Checking Anti-Kickback Fingers 44
Checking Pulley Alignment 45
Tensioning Table Height Chain 45
Adjusting Table Parallelism 46

SECTION 8: WIRING 48
Wiring Safety Instructions 48
G1033 Wiring Diagram 49
G1033 Electrical Components 50
G1033X Wiring Diagram 51
G1033X Electrical Components 52
G1033Z Wiring Diagram 53
G1033Z Electrical Components 54

SECTION 9: PARTS 55
G1033/G1033Z Main 55
G1033/G1033Z Stand & Motor 58
G1033/G1033Z Table & Base 60
G1033/G1033Z Labels & Cosmetics 62
G1033X Main 63
G1033X Stand & Motor 66
G1033X Table & Base 68
G1033X Labels & Cosmetics 70

WARRANTY & RETURNS 73

INTRODUCTION

Contact Info

We stand behind our machines! If you have questions or need help, contact us with the information below. Before contacting, make sure you get the **serial number** and **manufacture date** from the machine ID label. This will help us help you faster.

Grizzly Technical Support
1815 W. Battlefield
Springfield, MO 65807
Phone: (570) 546-9663
Email: techsupport@grizzly.com

We want your feedback on this manual. What did you like about it? Where could it be improved? Please take a few minutes to give us feedback.

Grizzly Documentation Manager
P.O. Box 2069
Bellingham, WA 98227-2069
Email: manuals@grizzly.com

Machine Description

- **Model G1033** is a 3 HP, 20" planer with a 4-knife cutterhead, roller extension tables, and a magnetic ON/OFF switch mounted to the headstock.
- **Model G1033X** is a 5 HP, 20" planer with a helical cutterhead, cast-iron extension tables, and a pedestal-mounted control panel.
- **Model G1033Z** is a 5 HP, 20" planer with a 4-knife cutterhead, cast-iron extension tables, and a magnetic ON/OFF switch mounted to the headstock.

Manual Accuracy

We are proud to provide a high-quality owner's manual with your new machine!

We made every effort to be exact with the instructions, specifications, drawings, and photographs in this manual. Sometimes we make mistakes, but our policy of continuous improvement also means that **sometimes the machine you receive is slightly different than shown in the manual**.

If you find this to be the case, and the difference between the manual and machine leaves you confused or unsure about something, check our website for an updated version. We post current manuals and manual updates for free on our website at **www.grizzly.com**.

Alternatively, you can call our Technical Support for help. Before calling, make sure you write down the **Manufacture Date** and **Serial Number** from the machine ID label (see below). This information is required for us to provide proper tech support, and it helps us determine if updated documentation is available for your machine.

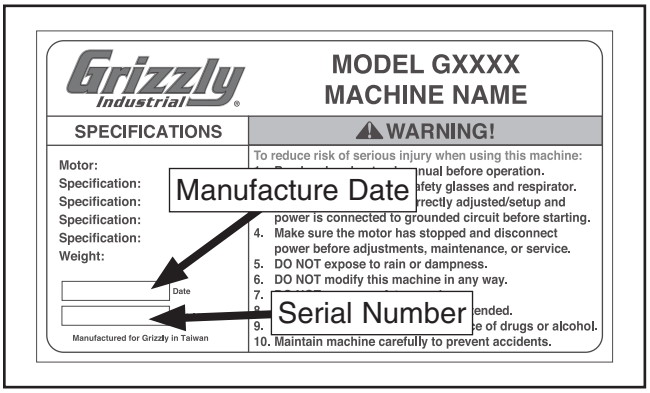

Identification

Become familiar with the names and locations of the controls and features shown below to better understand the instructions in this manual.

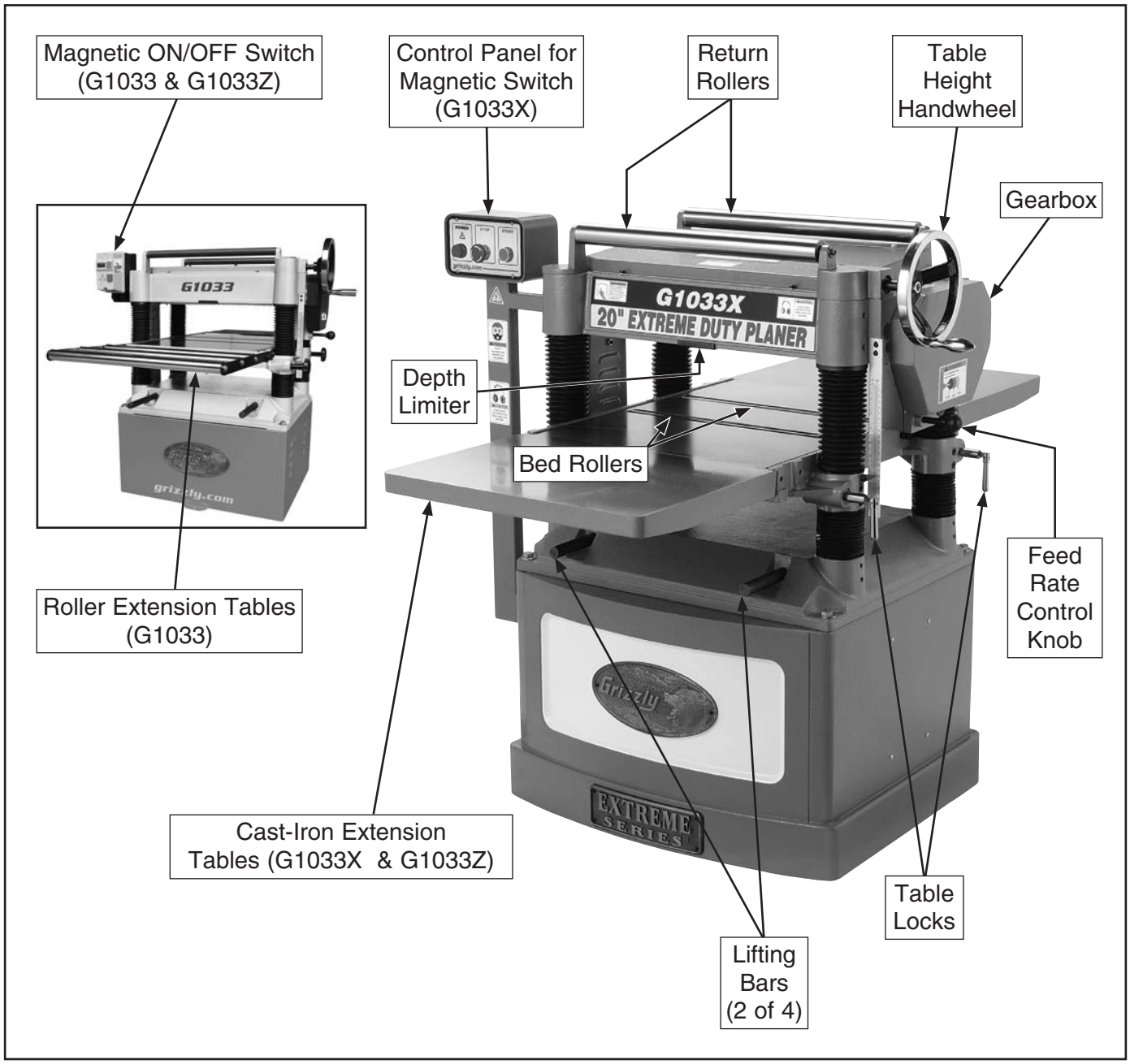

⚠WARNING

To reduce your risk of serious injury, read this entire manual BEFORE using machine.

Controls & Components

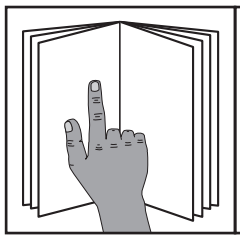

⚠WARNING

To reduce your risk of serious injury, read this entire manual BEFORE using machine.

Refer to **Figures 1–3** and the following descriptions to become familiar with the basic controls and components of this machine. Understanding these items and how they work will help you understand the rest of the manual and stay safe when operating this machine.

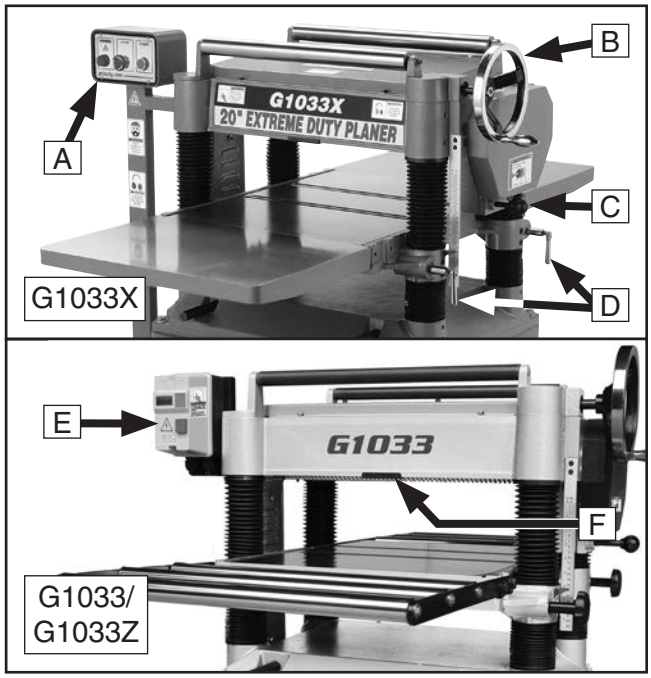

Figure 1. Table height and feed controls.

A. Control Panel for Magnetic Switch (G1033X): START button turns motor ***ON*** when pressed. Emergency STOP button turns motor ***OFF*** when pressed; for safety purposes, this button will remain depressed and prevent restarting until reset. Reset by rotating clockwise until it pops out.

B. Table Height Handwheel: Raises and lowers table to accommodate different workpiece thicknesses. One complete revolution moves the table approximately 1⁄16".

C. Feed Rate Control Knob: Selects 28 FPM feed rate when pushed in or 16 FPM feed rate when pulled out.

D. Table Locks: Secure table height position when tightened.

E. Magnetic ON/OFF Switch (G1033 & G1033Z): Start button turns motor ***ON*** when pressed. Stop button turns motor ***OFF*** when pressed.

F. Depth Limiter: Limits depth of cut to a maximum of 1⁄8" at full width.

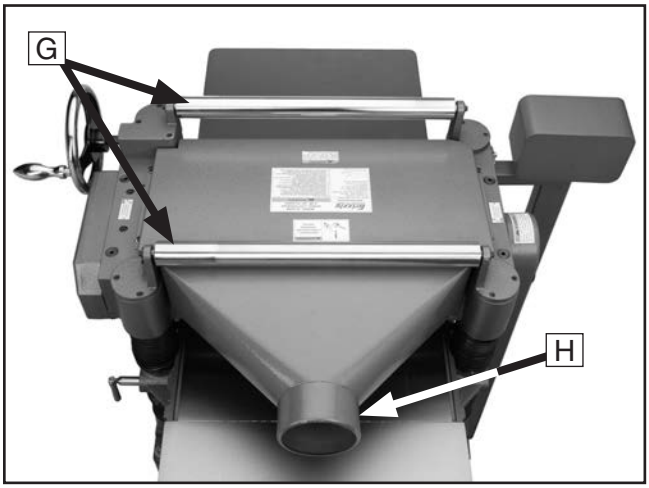

Figure 2. Return rollers and dust hood.

G. Return Rollers: Assist sliding workpiece back to operator following planing operation.

H. Dust Hood: Connects to a dust-collection system to extract shavings and dust during operation.

Internal Components

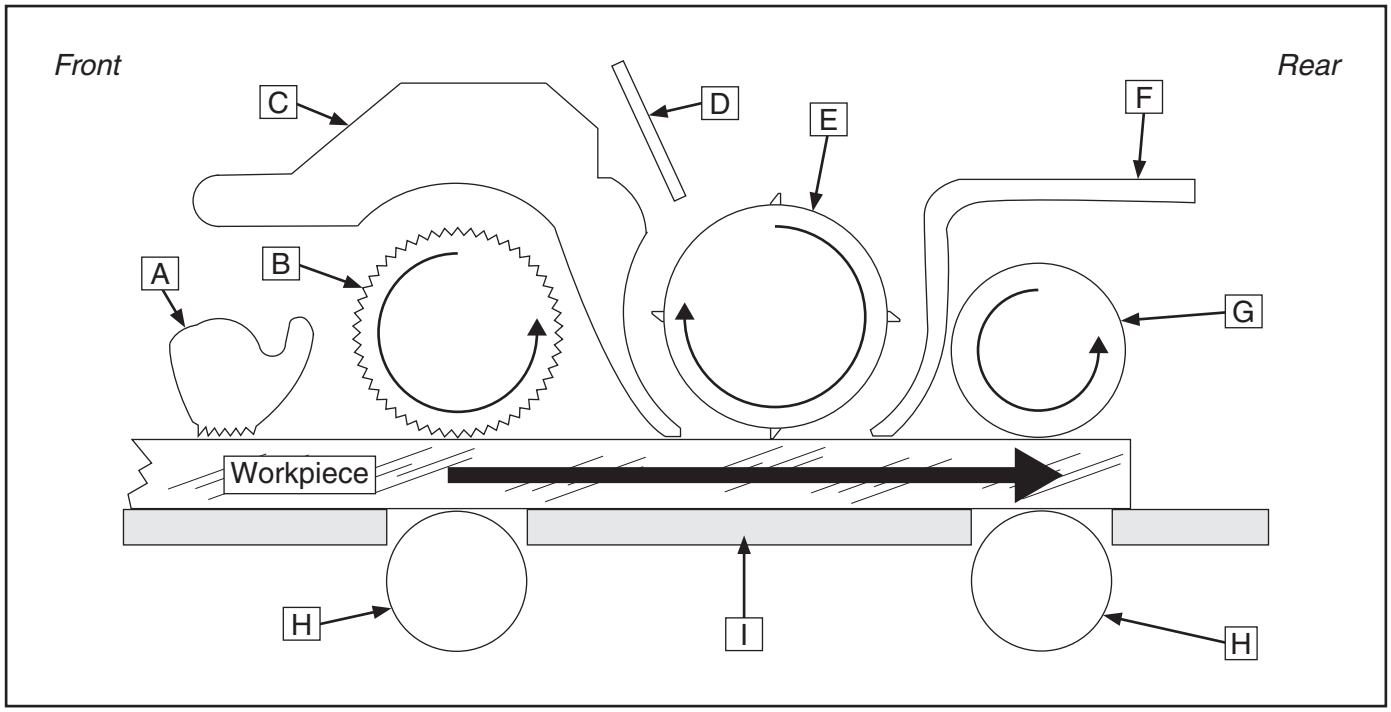

Figure 3. Workpiece path and major planing components (side cutaway view).

A. Anti-Kickback Fingers: Provide additional safety for the operator.

B. Serrated Infeed Roller: Pulls the workpiece toward the cutterhead.

C. Chip Breaker: Breaks off chips created by the cutterhead to prevent tear-out and diverts the chips to the dust hood.

D. Chip Deflector: Directs chips into the dust hood.

E. Cutterhead: Holds the knives/indexable carbide inserts that remove material from the workpiece.

F. Pressure Bar: Stabilizes the workpiece as it leaves the cutterhead and assists in deflecting wood particles toward the dust hood.

G. Outfeed Roller: Pulls the workpiece through the planer.

H. Bed Rollers: Provide upward pressure on the workpiece, enabling the feed rollers to pull the workpiece along.

I. Planer Table: Provides a smooth and level path for the workpiece as it moves through the planer.

⚠WARNING

Like all machinery there is potential danger when operating this machine. Accidents are frequently caused by lack of familiarity or failure to pay attention. Use this machine with respect and caution to decrease the risk of operator injury. If normal safety precautions are overlooked or ignored, serious personal injury may occur.

MACHINE DATA SHEET

Customer Service #: (570) 546-9663 · To Order Call: (800) 523-4777 · Fax #: (800) 438-5901

MODEL G1033, G1033X, G1033Z PLANERS

Model Number	G1033	G1033X	G1033Z
Product Dimensions			
Weight	702 lbs.	775 lbs	702 lbs.
Width (side-to-side) x Depth (front-to-back) x Height	39" x 58" x 41"	39" x 56" x 41"	39" x 58" x 41"
Foot Print (Length x Width)	22" x 28"		
Shipping Dimensions			
Type	Wood Crate		
Weight	820 lbs.	909 lbs.	820 lbs.
Width (side-to-side) x Depth (front-to-back) x Height	38" x 30" x 46"	45" x 30" x 46"	38" x 30" x 46"
Electrical			
Power Requirement	220V, Single-Phase, 60 Hz		
Full-Load Current Rating	18A	23A	
Minimum Circuit Size	20A	30A	
Connection Type	Cord & Plug		
Power Cord Included	Yes		
Power Cord Length	10'		
Power Cord Gauge	12 AWG		
Plug Included	Yes		
Included Plug Type	6-20	L6-30	
Switch Type	Magnetic Switch w/Thermal Overload Protection	Button Controls w/ Magnetic Switch Protection	Magnetic Switch w/Thermal Overload Protection
Motor			
Type	TEFC Capacitor-Start Induction		
Horsepower	3 HP	5 HP	
Phase	Single-Phase		
Amps	18A	23A	
Speed	3450 RPM		
Power Transfer	Triple V-Belt Drive		
Bearings	Shielded & Permanently Lubricated		
Manufacturer Specifications			
Country of Origin	Taiwan		
Warranty	1 Year		
Approx. Assembly & Setup Time	30 Minutes		
Serial Number Location	ID Label on Upper Cover		
ISO 9001 Factory	Yes		
NRTL Certified	Yes		

Model Number	G1033	G1033X	G1033Z
Main Specifications			
Planer Size	20"		
Max. Cut Width	20"		
Max. Stock Thickness	8"		
Min. Stock Thickness	¼"		
Min. Stock Length	7"		
Number of Cuts Per Inch	104, 83		
Number of Cuts Per Minute	20,000		
Cutterhead Speed	5000 RPM		
Planing Feed Rate	16, 28 FPM		
Max. Cut Depth Planing Full Width	3/32"	5/64"	3/32"
Max. Cut Depth Planing 6-Inch Wide Board	⅛"		
Dust Port Size	5"		
Cutterhead Info			
Cutterhead Type	4-Knife	Helical	4-Knife
Cutterhead Diameter	3¼"		
Number of Knives	4	N/A	4
Knife Type	HSS, Single-Sided, Solid	N/A	HSS, Single-Sided, Solid
Knife Length	20"	N/A	20"
Knife Width	1"	N/A	1"
Knife Thickness	⅛"	N/A	⅛"
Knife Adjustment	Springs or Jack Screws	N/A	Springs or Jack Screws
Number of Spirals	N/A	4	N/A
Number of Indexable Cutters	N/A	92	N/A
Cutter Insert Type	N/A	Indexable Carbide	N/A
Cutter Insert Length	N/A	15mm	N/A
Cutter Insert Width	N/A	15mm	N/A
Cutter Insert Thickness	N/A	2.5mm	N/A
Table Info			
Table Movement	8"		
Table Bed Length	58"	56"	56"
Table Bed Width	25¾"	20"	20"
Table Bed Thickness	2½"	2¼"	2¼"
Floor-to-Table Height	22½" – 31"	26" – 34"	22½" – 31"
Construction			
Table	Precision-Ground Cast Iron		
Body	Cast Iron		
Stand	Steel		
Cutterhead Assembly	Steel		
Infeed Roller	Serrated Steel		
Outfeed Roller	Smooth Steel		
Paint Type/Finish	Powder Coated		

SECTION 1: SAFETY

For Your Own Safety, Read Instruction Manual Before Operating This Machine

The purpose of safety symbols is to attract your attention to possible hazardous conditions. This manual uses a series of symbols and signal words intended to convey the level of importance of the safety messages. The progression of symbols is described below. Remember that safety messages by themselves do not eliminate danger and are not a substitute for proper accident prevention measures. Always use common sense and good judgment.

DANGER — **Indicates an imminently hazardous situation which, if not avoided, WILL result in death or serious injury.**

WARNING — **Indicates a potentially hazardous situation which, if not avoided, COULD result in death or serious injury.**

CAUTION — **Indicates a potentially hazardous situation which, if not avoided, MAY result in minor or moderate injury. It may also be used to alert against unsafe practices.**

NOTICE — **Alerts the user to useful information about proper operation of the machine to avoid machine damage.**

Safety Instructions for Machinery

WARNING

OWNER'S MANUAL. Read and understand this owner's manual BEFORE using machine.

TRAINED OPERATORS ONLY. Untrained operators have a higher risk of being hurt or killed. Only allow trained/supervised people to use this machine. When machine is not being used, disconnect power, remove switch keys, or lock-out machine to prevent unauthorized use—especially around children. Make your workshop kid proof!

DANGEROUS ENVIRONMENTS. Do not use machinery in areas that are wet, cluttered, or have poor lighting. Operating machinery in these areas greatly increases the risk of accidents and injury.

MENTAL ALERTNESS REQUIRED. Full mental alertness is required for safe operation of machinery. Never operate under the influence of drugs or alcohol, when tired, or when distracted.

ELECTRICAL EQUIPMENT INJURY RISKS. You can be shocked, burned, or killed by touching live electrical components or improperly grounded machinery. To reduce this risk, only allow qualified service personnel to do electrical installation or repair work, and always disconnect power before accessing or exposing electrical equipment.

DISCONNECT POWER FIRST. Always disconnect machine from power supply BEFORE making adjustments, changing tooling, or servicing machine. This prevents an injury risk from unintended startup or contact with live electrical components.

EYE PROTECTION. Always wear ANSI-approved safety glasses or a face shield when operating or observing machinery to reduce the risk of eye injury or blindness from flying particles. Everyday eyeglasses are NOT approved safety glasses.

⚠WARNING

WEARING PROPER APPAREL. Do not wear clothing, apparel or jewelry that can become entangled in moving parts. Always tie back or cover long hair. Wear non-slip footwear to reduce risk of slipping and losing control or accidentally contacting cutting tool or moving parts.

HAZARDOUS DUST. Dust created by machinery operations may cause cancer, birth defects, or long-term respiratory damage. Be aware of dust hazards associated with each workpiece material. Always wear a NIOSH-approved respirator to reduce your risk.

HEARING PROTECTION. Always wear hearing protection when operating or observing loud machinery. Extended exposure to this noise without hearing protection can cause permanent hearing loss.

REMOVE ADJUSTING TOOLS. Tools left on machinery can become dangerous projectiles upon startup. Never leave chuck keys, wrenches, or any other tools on machine. Always verify removal before starting!

USE CORRECT TOOL FOR THE JOB. Only use this tool for its intended purpose—do not force it or an attachment to do a job for which it was not designed. Never make unapproved modifications—modifying tool or using it differently than intended may result in malfunction or mechanical failure that can lead to personal injury or death!

AWKWARD POSITIONS. Keep proper footing and balance at all times when operating machine. Do not overreach! Avoid awkward hand positions that make workpiece control difficult or increase the risk of accidental injury.

CHILDREN & BYSTANDERS. Keep children and bystanders at a safe distance from the work area. Stop using machine if they become a distraction.

GUARDS & COVERS. Guards and covers reduce accidental contact with moving parts or flying debris. Make sure they are properly installed, undamaged, and working correctly BEFORE operating machine.

FORCING MACHINERY. Do not force machine. It will do the job safer and better at the rate for which it was designed.

NEVER STAND ON MACHINE. Serious injury may occur if machine is tipped or if the cutting tool is unintentionally contacted.

STABLE MACHINE. Unexpected movement during operation greatly increases risk of injury or loss of control. Before starting, verify machine is stable and mobile base (if used) is locked.

USE RECOMMENDED ACCESSORIES. Consult this owner's manual or the manufacturer for recommended accessories. Using improper accessories will increase the risk of serious injury.

UNATTENDED OPERATION. To reduce the risk of accidental injury, turn machine ***OFF*** and ensure all moving parts completely stop before walking away. Never leave machine running while unattended.

MAINTAIN WITH CARE. Follow all maintenance instructions and lubrication schedules to keep machine in good working condition. A machine that is improperly maintained could malfunction, leading to serious personal injury or death.

DAMAGED PARTS. Regularly inspect machine for damaged, loose, or mis-adjusted parts—or any condition that could affect safe operation. Immediately repair/replace BEFORE operating machine. For your own safety, DO NOT operate machine with damaged parts!

MAINTAIN POWER CORDS. When disconnecting cord-connected machines from power, grab and pull the plug—NOT the cord. Pulling the cord may damage the wires inside. Do not handle cord/plug with wet hands. Avoid cord damage by keeping it away from heated surfaces, high traffic areas, harsh chemicals, and wet/damp locations.

EXPERIENCING DIFFICULTIES. If at any time you experience difficulties performing the intended operation, stop using the machine! Contact our Technical Support at (570) 546-9663.

Additional Safety for Planers

⚠WARNING

Amputation, serious cuts, entanglement, or death can occur from contact with rotating cutterhead or other moving parts! Flying chips can cause eye injuries or blindness. Workpieces or knives thrown by cutterhead can strike nearby operator or bystanders with deadly force. To reduce the risk of these hazards, operator and bystanders MUST completely heed hazards and warnings below.

KICKBACK. Know how to reduce the risk of kickback and kickback-related injuries. "Kickback" occurs during the operation when the workpiece is ejected from the machine at a high rate of speed. Kickback is commonly caused by poor workpiece selection, unsafe feeding techniques, or improper machine setup/maintenance. Kickback injuries typically occur as follows: (1) operator/bystanders are struck by the workpiece, resulting in impact injuries (i.e., blindness, broken bones, bruises, death); (2) operator's hands are pulled into blade, resulting in amputation or severe lacerations.

AVOID CONTACT WITH MOVING PARTS. Never remove guards/covers or reach inside the planer during operation or while connected to power. You could be seriously injured if you accidentally touch the spinning cutterhead or get entangled in moving parts. If a workpiece becomes stuck or sawdust removal is necessary, turn planer ***OFF*** and disconnect power before clearing.

DULL/DAMAGED KNIVES/INSERTS. Only use sharp, undamaged knives/inserts. Dull or damaged knives/inserts increase the risk of kickback.

INSPECTING STOCK. To reduce the risk of kickback injuries or machine damage, thoroughly inspect and prepare the workpiece before cutting. Verify workpiece is free of nails, staples, loose knots or foreign material. Workpieces with minor warping should be jointed first or planed with the cupped side facing the table.

BODY PLACEMENT. Stand to one side of planer during the entire operation to avoid getting hit if kickback occurs.

GRAIN DIRECTION. Planing across the grain is hard on the planer and may cause kickback. Plane in the same direction or at a slight angle with the wood grain.

PLANING CORRECT MATERIAL. Only plane natural wood stock with this planer. DO NOT plane MDF, OSB, plywood, laminates or other synthetic materials that can break up inside the planer and be ejected towards the operator.

LOOKING INSIDE PLANER. Wood chips fly around inside the planer at a high rate of speed during operation. To avoid injury from flying material, DO NOT look inside planer during operation.

CUTTING LIMITATIONS. To reduce the risk of kickback hazards or damage to the machine, do not exceed the maximum depth of cut or minimum board length and thickness found in the **Data Sheet**. Only feed one board at a time.

INFEED ROLLER CLEARANCE. The infeed roller is designed to pull material into the spinning cutterhead. To reduce the risk of entanglement, keep hands, clothing, jewelry, and long hair away from the infeed roller during operation.

FEED WORKPIECE PROPERLY. To reduce the risk of kickback, never start planer with workpiece touching cutterhead. Allow cutterhead to reach full speed before feeding, and do not change feed speed during cutting operation.

WORKPIECE SUPPORT. To reduce the risk of kickback, always make sure workpiece can move completely across table without rocking or tipping. Use auxiliary support stands for long stock.

SECURE KNIVES/INSERTS. Loose knives or improperly set inserts can become dangerous projectiles or cause machine damage. Always verify knives/inserts are secure and properly adjusted before operation.

SECTION 2: POWER SUPPLY

Availability

Before installing the machine, consider the availability and proximity of the required power supply circuit. If an existing circuit does not meet the requirements for this machine, a new circuit must be installed. To minimize the risk of electrocution, fire, or equipment damage, installation work and electrical wiring must be done by an electrician or qualified service personnel in accordance with all applicable codes and standards.

WARNING

Electrocution, fire, shock, or equipment damage may occur if machine is not properly grounded and connected to power supply.

Full-Load Current Rating

The full-load current rating is the amperage a machine draws at 100% of the rated output power. On machines with multiple motors, this is the amperage drawn by the largest motor or sum of all motors and electrical devices that might operate at one time during normal operations.

G1033 ..... 18 Amps
G1033X & G1033Z ..... 23 Amps

The full-load current is not the maximum amount of amps that the machine will draw. If the machine is overloaded, it will draw additional amps beyond the full-load rating.

If the machine is overloaded for a sufficient length of time, damage, overheating, or fire may result—especially if connected to an undersized circuit. To reduce the risk of these hazards, avoid overloading the machine during operation and make sure it is connected to a power supply circuit that meets the specified circuit requirements.

Circuit Information

A power supply circuit includes all electrical equipment between the breaker box or fuse panel in the building and the machine. The power supply circuit used for this machine must be sized to safely handle the full-load current drawn from the machine for an extended period of time. (If this machine is connected to a circuit protected by fuses, use a time delay fuse marked D.)

CAUTION

For your own safety and protection of property, consult an electrician if you are unsure about wiring practices or electrical codes in your area.

Note: *Circuit requirements in this manual apply to a dedicated circuit—where only one machine will be running on the circuit at a time. If machine will be connected to a shared circuit where multiple machines may be running at the same time, consult an electrician or qualified service personnel to ensure circuit is properly sized for safe operation.*

Circuit Requirements

This machine is prewired to operate on a power supply circuit that has a verified ground and meets the following requirements:

G1033:
Nominal Voltage 208V, 220V, 230V, 240V
Cycle ..... 60 Hz
Phase ..... Single-Phase
Power Supply Circuit ..... 20 Amps
Plug/Receptacle ..... NEMA 6-20

G1033X & G1033Z:
Nominal Voltage 208V, 220V, 230V, 240V
Cycle ..... 60 Hz
Phase ..... Single-Phase
Power Supply Circuit ..... 30 Amps
Plug/Receptacle ..... NEMA L6-30

Grounding Instructions

This machine MUST be grounded. In the event of certain malfunctions or breakdowns, grounding reduces the risk of electric shock by providing a path of least resistance for electric current.

This machine is equipped with a power cord that has an equipment-grounding wire and a grounding plug. Only insert plug into a matching receptacle (outlet) that is properly installed and grounded in accordance with all local codes and ordinances. DO NOT modify the provided plug!

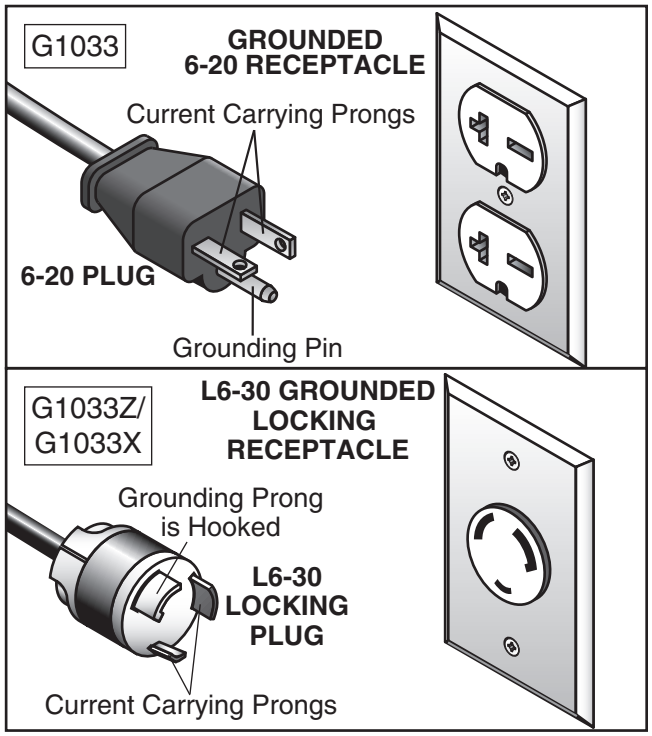

Figure 4. Typical plugs and receptacles.

⚠CAUTION

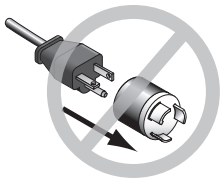

No adapter should be used with plug. If plug does not fit available receptacle, or if machine must be reconnected for use on a different type of circuit, reconnection must be performed by an electrician or qualified service personnel, and it must comply with all local codes and ordinances.

⚠WARNING

Serious injury could occur if you connect machine to power before completing setup process. DO NOT connect to power until instructed later in this manual.

Improper connection of the equipment-grounding wire can result in a risk of electric shock. The wire with green insulation (with or without yellow stripes) is the equipment-grounding wire. If repair or replacement of the power cord or plug is necessary, do not connect the equipment-grounding wire to a live (current carrying) terminal.

Check with a qualified electrician or service personnel if you do not understand these grounding requirements, or if you are in doubt about whether the tool is properly grounded. If you ever notice that a cord or plug is damaged or worn, disconnect it from power, and immediately replace it with a new one.

Extension Cords

We do not recommend using an extension cord with this machine. If you must use an extension cord, only use it if absolutely necessary and only on a temporary basis.

Extension cords cause voltage drop, which can damage electrical components and shorten motor life. Voltage drop increases as the extension cord size gets longer and the gauge size gets smaller (higher gauge numbers indicate smaller sizes).

Any extension cord used with this machine must be in good condition and contain a ground wire and matching plug/receptacle. Additionally, it must meet the following size requirements:

G1033:
Minimum Gauge Size .....12 AWG
Maximum Length (Shorter is Better).....50 ft.

G1033X & G1033Z:
Minimum Gauge Size .....10 AWG
Maximum Length (Shorter is Better).....50 ft.

SECTION 3: SETUP

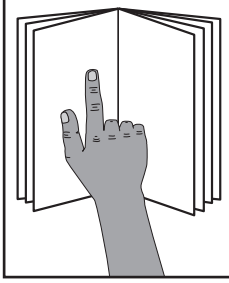

⚠WARNING

This machine presents serious injury hazards to untrained users. Read through this entire manual to become familiar with the controls and operations before starting the machine!

⚠WARNING

Wear safety glasses during the entire setup process!

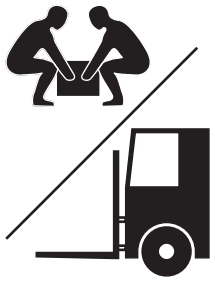

⚠WARNING

HEAVY LIFT!

Straining or crushing injury may occur from improperly lifting machine or some of its parts. To reduce this risk, get help from other people and use a forklift (or other lifting equipment) rated for weight of this machine.

⚠WARNING

SUFFOCATION HAZARD!

Keep children and pets away from plastic bags or packing materials shipped with this machine.

Needed for Setup

The following items are needed, but not included, for the setup/assembly of this machine.

Description **Qty**

- Additional People 1
- Safety Glasses ..... 1 Per Person
- Forklift (rated for at least 1000 lbs.)..... 1
- Cleaner/Degreaser (**Page 15**) .... As Needed
- Disposable Shop Rags..... As Needed
- Phillips Screwdriver #2 1
- Hex Wrench 6mm..... 1
- Wrench or Socket 18mm..... 1
- Straightedge 4' 1
- Dust-Collection System..... 1
- 5" Dust Hose ..... Length As Needed
- 5" Hose Clamps 2

G1033 Only:

- Wrench or Socket 10mm, 16mm.....1 Ea.

G1033X & G1033Z Only:

- Wrench or Socket 13mm..... 1

Unpacking

This machine was carefully packaged for safe transport. When unpacking, separate all enclosed items from packaging materials and inspect them for shipping damage. ***If items are damaged, please call us immediately at (570) 546-9663.***

IMPORTANT: Save all packaging materials until you are completely satisfied with the machine and have resolved any issues between Grizzly or the shipping agent. *You MUST have the original packaging to file a freight claim. It is also extremely helpful if you need to return your machine later.*

Inventory

The following items are shipped with your machine. Lay these items out and inventory them.

If any non-proprietary parts are missing (e.g. a nut or a washer), we will gladly replace them; or for the sake of expediency, replacements can be obtained at your local hardware store.

Box 1 (Figure 5) **Qty**
A. Planer Unit (Not Shown) 1
B. Dust Hood 1
C. Roller Ext. Tables (G1033) 2
D. Cast-Iron Extension Tables (G1033X/Z)..... 2
E. Table Height Handwheel 1

Tools and Hardware (Figure 6)
F. Hex Wrenches 3, 4, 5, 6mm.....1 Ea.
G. Flat Washer 12mm (Handwheel)..... 1
H. Flange Bolts M6-1 x 12 (Dust Hood)..... 6
I. Key 4 x 4 x 10 (Handwheel) 1
J. LOW/HIGH Direction Label (Handwheel)... 1
K. Handwheel Handle (Handwheel)..... 1
L. Flat Wrench 10/13mm 1
M. Open-End Wrenches 12/14, 17/19mm..1 Ea.
N. Hex Nut M12-1.75 (Handwheel)..... 1

G1033 (Figure 7)
O. Hex Bolts M10-1.5 x 25 (Ext. Tables) 8
P. Fender Washers 13mm (Ext. Tables)..... 8
Q. Knife-Setting Jig Assembly 1
—Knife-Setting Jig Foot 2
—Knife-Setting Jig Shaft..... 1
—E-Clip 9mm..... 4

G1033Z (Figures 7-8)
Q. Knife-Setting Jig Assembly 1
—Knife-Setting Jig Foot 2
—Knife-Setting Jig Shaft..... 1
—E-Clip 9mm..... 4
R. Hex Bolts M8-1.25 x 25 (Ext. Tables)..... 6
T. Set Screws M8-1.25 x 12 (Ext. Tables) 6

G1033X (Figure 8)
R. Hex Bolts M8-1.25 x 25 (Ext. Tables)..... 6
S. Flat Head Torx Screws #10-32 x ½" 20
T. Set Screws M8-1.25 x 12 (Ext. Tables) 6
U. Indexable Carbide Inserts 15 x 15 x 2.5... 10
V. Wrench 8/10mm 1
W. T-Handle Torx Wrenches T-25 2

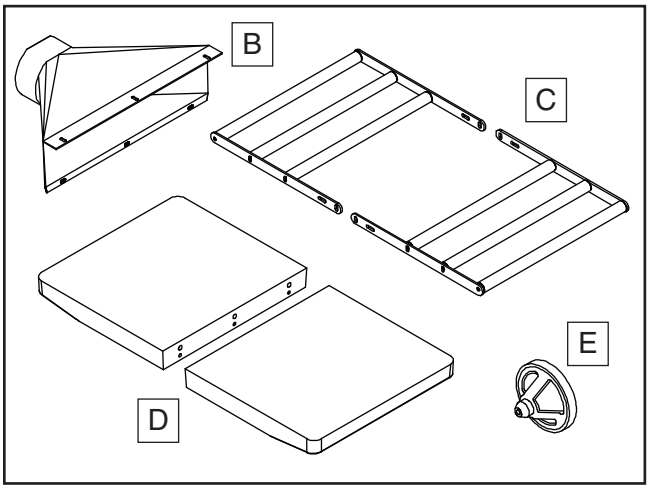

Figure 5. Box inventory.

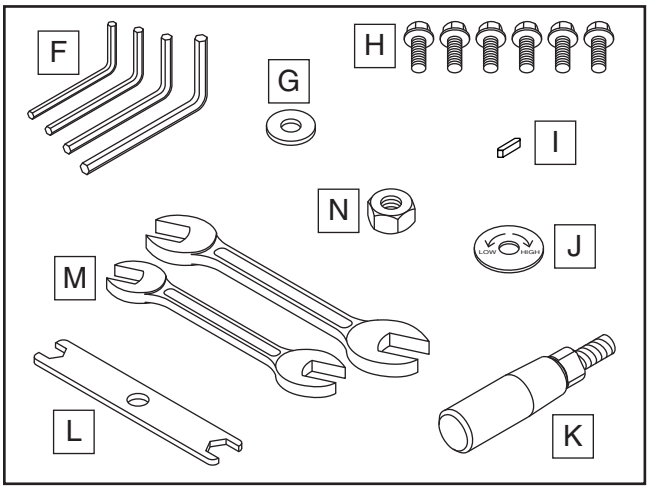

Figure 6. Tools and hardware.

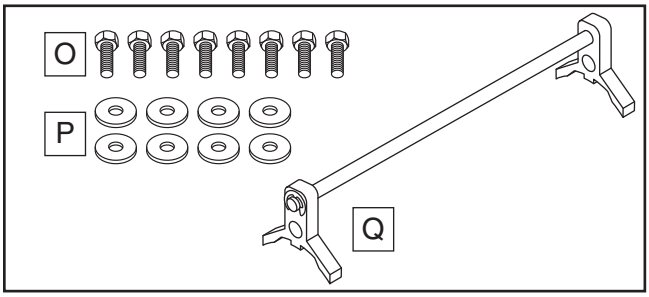

Figure 7. Tools and hardware (G1033 & G1033Z).

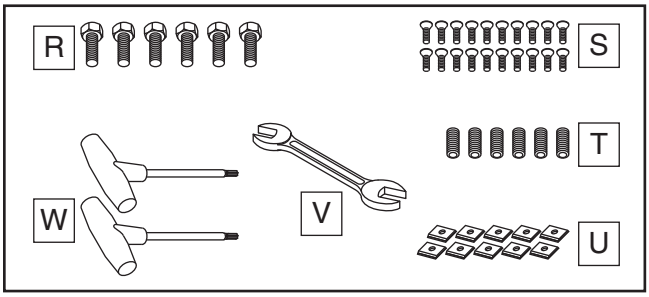

Figure 8. Tools and hardware (G1033X & G1033Z).

Cleanup

The unpainted surfaces of your machine are coated with a heavy-duty rust preventative that prevents corrosion during shipment and storage. This rust preventative works extremely well, but it will take a little time to clean.

Be patient and do a thorough job cleaning your machine. The time you spend doing this now will give you a better appreciation for the proper care of your machine's unpainted surfaces.

There are many ways to remove this rust preventative, but the following steps work well in a wide variety of situations. Always follow the manufacturer's instructions with any cleaning product you use and make sure you work in a well-ventilated area to minimize exposure to toxic fumes.

Before cleaning, gather the following:
- Disposable rags
- Cleaner/degreaser (WD•40 works well)
- Safety glasses & disposable gloves
- Plastic paint scraper (optional)

Basic steps for removing rust preventative:

1. Put on safety glasses.

2. Coat the rust preventative with a liberal amount of cleaner/degreaser, then let it soak for 5–10 minutes.

3. Wipe off the surfaces. If your cleaner/degreaser is effective, the rust preventative will wipe off easily. If you have a plastic paint scraper, scrape off as much as you can first, then wipe off the rest with the rag.

4. Repeat **Steps 2–3** as necessary until clean, then coat all unpainted surfaces with a quality metal protectant to prevent rust.

WARNING

Gasoline and petroleum products have low flash points and can explode or cause fire if used to clean machinery. Avoid using these products to clean machinery.

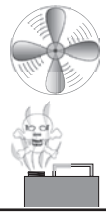

CAUTION

Many cleaning solvents are toxic if inhaled. Only work in a well-ventilated area.

NOTICE

Avoid harsh solvents like acetone or brake parts cleaner that may damage painted surfaces. Always test on a small, inconspicuous location first.

T23692—Orange Power Degreaser
A great product for removing the waxy shipping grease from the ***non-painted*** parts of the machine during clean up.

Figure 9. T23692 Orange Power Degreaser.

Site Considerations

Weight Load

Refer to the **Machine Data Sheet** for the weight of your machine. Make sure that the surface upon which the machine is placed will bear the weight of the machine, additional equipment that may be installed on the machine, and the heaviest workpiece that will be used. Additionally, consider the weight of the operator and any dynamic loading that may occur when operating the machine.

Space Allocation

Consider the largest size of workpiece that will be processed through this machine and provide enough space around the machine for adequate operator material handling or the installation of auxiliary equipment. With permanent installations, leave enough space around the machine to open or remove doors/covers as required by the maintenance and service described in this manual. **See below for required space allocation.**

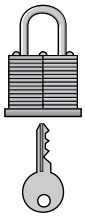

⚠CAUTION

Children or untrained people may be seriously injured by this machine. Only install in an access restricted location.

Physical Environment

The physical environment where the machine is operated is important for safe operation and longevity of machine components. For best results, operate this machine in a dry environment that is free from excessive moisture, hazardous chemicals, airborne abrasives, or extreme conditions. Extreme conditions for this type of machinery are generally those where the ambient temperature range exceeds 41°–104°F; the relative humidity range exceeds 20%–95% (non-condensing); or the environment is subject to vibration, shocks, or bumps.

Electrical Installation

Place this machine near an existing power source. Make sure all power cords are protected from traffic, material handling, moisture, chemicals, or other hazards. Make sure to leave enough space around machine to disconnect power supply or apply a lockout/tagout device, if required.

Lighting

Lighting around the machine must be adequate enough that operations can be performed safely. Shadows, glare, or strobe effects that may distract or impede the operator must be eliminated.

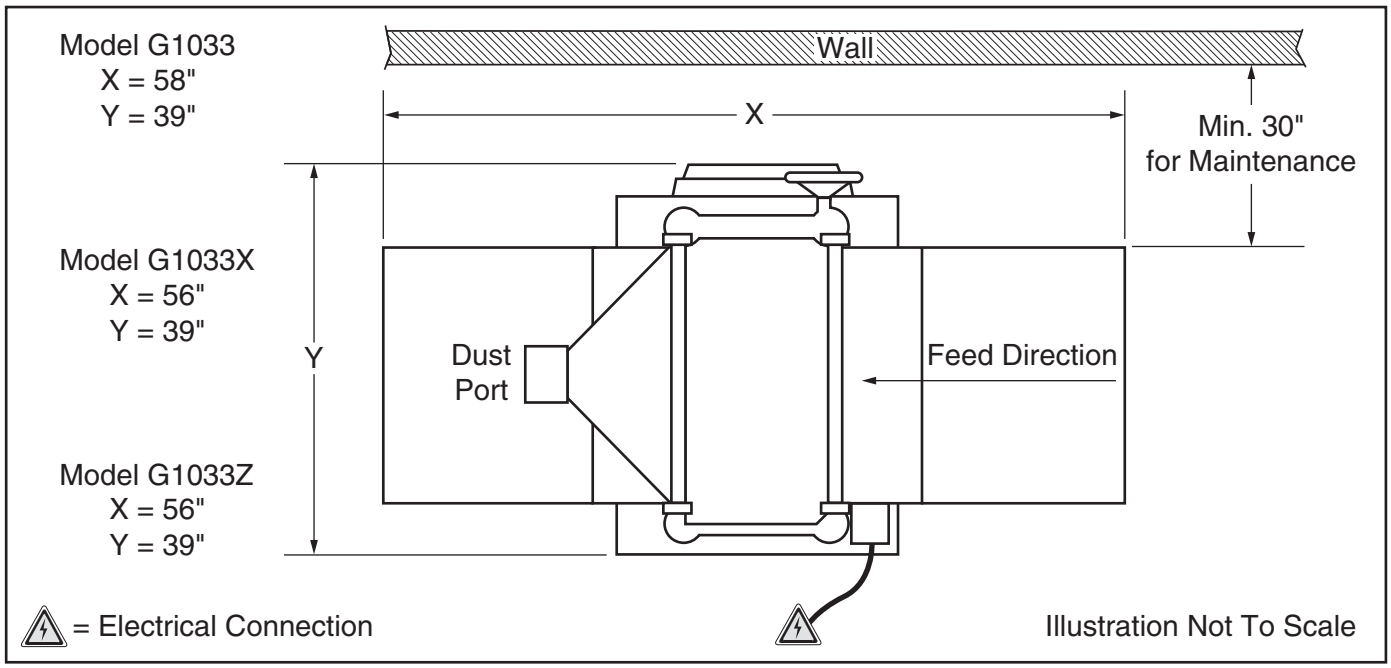

Figure 10. Minimum working clearances.

Lifting & Placing

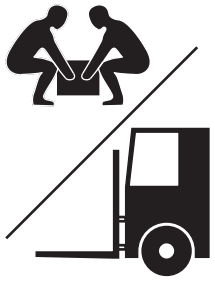

WARNING

HEAVY LIFT!

Straining or crushing injury may occur from improperly lifting machine or some of its parts. To reduce this risk, get help from other people and use a forklift (or other lifting equipment) rated for weight of this machine.

The planer is equipped with four lifting bars that extend in order to lift and place the planer.

To lift and place the planer, extend the lifting bars and use a forklift to lift the machine off the pallet, as shown in **Figure 11**, then set the planer down in a suitable location and return the lifting bars to their original position.

Tip: *When positioning lift forks, place shop rags or cardboard between forks and cabinet stand to avoid scratching paint.*

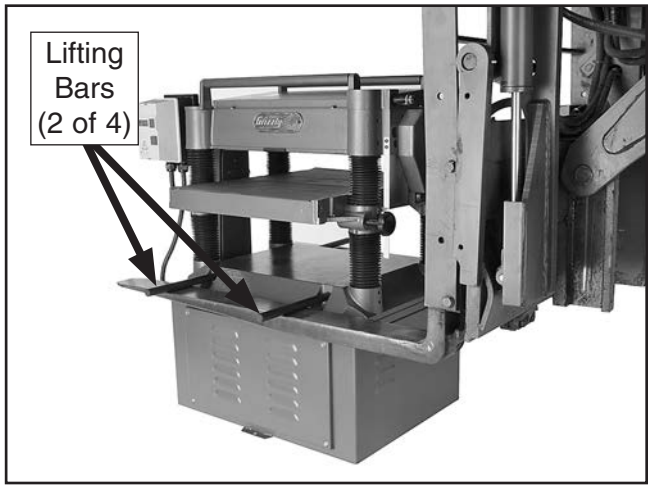

Figure 11. Example of lifting planer with forklift.

Assembly

The machine must be fully assembled before it can be operated. Before beginning the assembly process, refer to **Needed for Setup** and gather all listed items. To ensure the assembly process goes smoothly, first clean any parts that are covered or coated in heavy-duty rust preventative (if applicable).

To assemble planer:

1. **G1033:** Attach each roller extension table to planer table with (4) M10-1.5 x 25 hex bolts and (4) 13mm fender washers (see **Figure 12**). Do not fully tighten hex bolts at this time.

   G1033X & G1033Z: Attach each cast-iron extension table to planer table with (3) M8-1.25 x 25 hex bolts (see **Figure 12**). Do not fully tighten hex bolts at this time.

2. **G1033X & G1033Z:** Thread (3) M8-1.25 x 12 set screws into each extension table at locations shown in **Figure 12**.

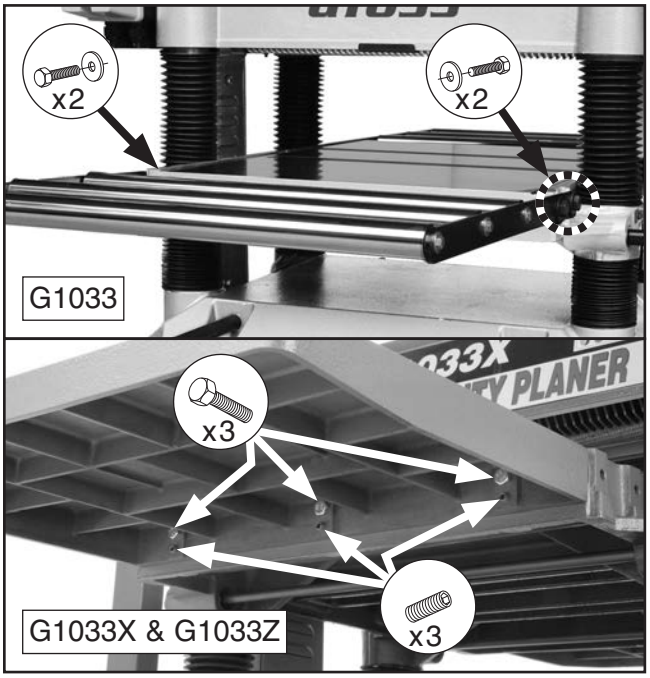

Figure 12. Extension table mounting locations.

3. **G1033:** Using a straightedge as a guide, position extension tables so they are in plane with main table, then fully tighten hex bolts from **Step 1** (see **Figure 13**).

   G1033X & G1033Z: Using a straightedge as a guide, rotate set screws from **Step 2** until extension tables are in plane with main table, then fully tighten hex bolts from **Step 1** (see **Figure 13**).

   Note: *Be aware that bed rollers will give you a false reading if they are raised above table. Move them down or work around them when leveling extension wings (refer to* ***Bed Roller Height*** *on* ***Page 25*** *for more information).*

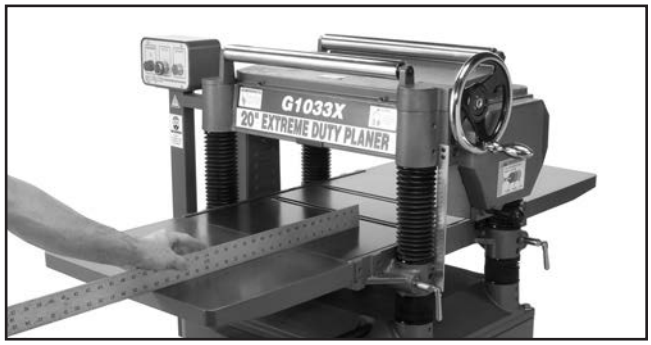

Figure 13. Leveling extension table (G1033X).

4. Insert 4 x 4 x 10 key into keyway on handwheel shaft.

5. Thread handle into rim of handwheel and tighten with wrench (see **Figure 14**).

6. Line up notch in handwheel bore with key, slide handwheel onto shaft, then slide handwheel direction label onto shaft, and secure with M12-1.75 hex nut and 12mm flat washer (see **Figure 14**).

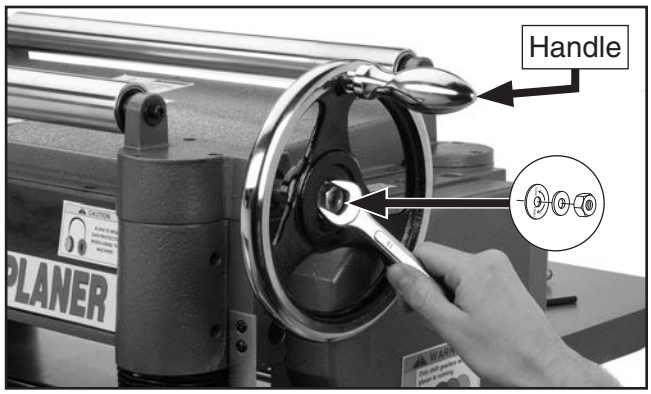

Figure 14. Installing handwheel on shaft.

7. Attach dust hood to planer with (6) M6-1 x 12 flange bolts (see **Figure 15**).

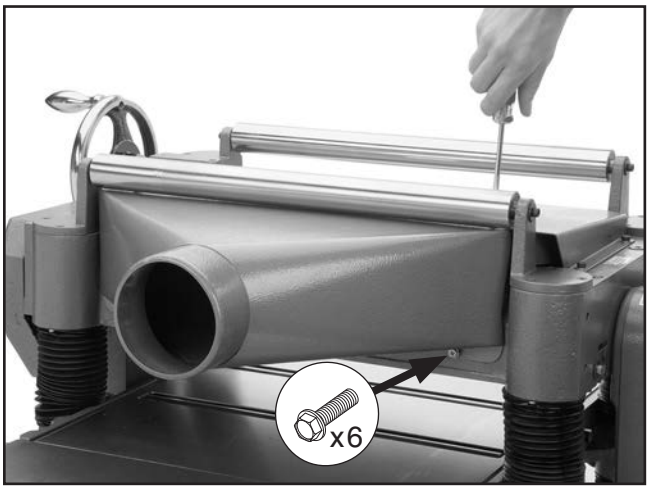

Figure 15. Installing dust hood.

8. **G1033 & G1033Z:** Assemble knife-setting jig (see **Figure 16**).

   a. Snap (2) 9mm E-clips into inner notches on knife-setting jig shaft.

   b. Slide (2) knife-setting jig feet onto ends of shaft.

   c. Snap (2) 9mm E-clips into outer notches on ends of shaft to secure feet.

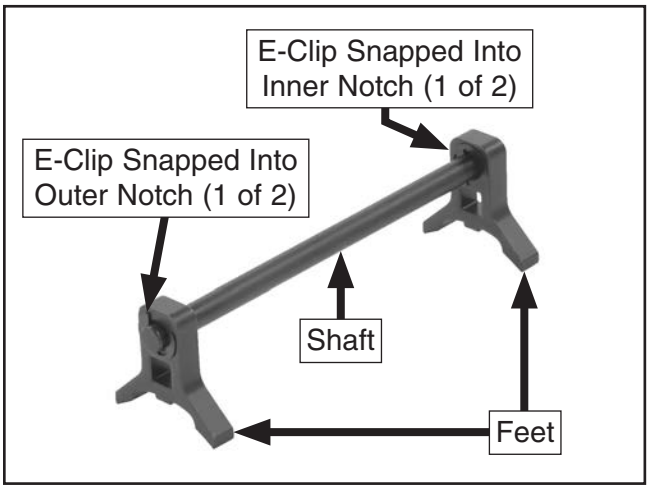

Figure 16. Example of assembled knife-setting jig components.

Dust Collection

⚠CAUTION

This machine creates a lot of wood chips/ dust during operation. Breathing airborne dust on a regular basis can result in permanent respiratory illness. Reduce your risk by wearing a respirator and capturing the dust with a dust-collection system.

Minimum CFM at Dust Port: 600 CFM
Do not confuse this CFM recommendation with the rating of the dust collector. To determine the CFM at the dust port, you must consider these variables: (1) CFM rating of the dust collector, (2) hose type and length between the dust collector and the machine, (3) number of branches or wyes, and (4) amount of other open lines throughout the system. Explaining how to calculate these variables is beyond the scope of this manual. Consult an expert or purchase a good dust collection "how-to" book.

To connect the machine to a dust collection system, fit a 5" dust hose over the dust port, and secure in place with a hose clamp (see **Figure 17**). Tug the hose to make sure it does not come off.

Note: *A tight fit is necessary for proper performance.*

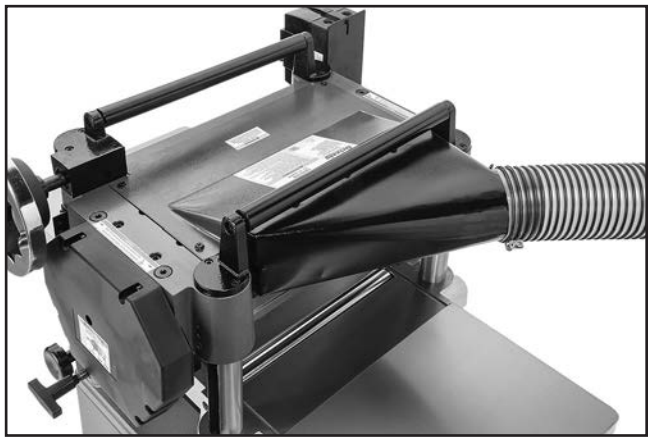

Figure 17. Example of dust hose connected to dust port.

Checking Gearbox Oil Level

Before starting your machine for the first time, check the gearbox oil level. The proper oil level is just even with the bottom of the fill plug hole. The gearbox uses ISO 320 gear oil. SAE 140 or SAE 85W–140 are acceptable alternatives if ISO 320 is not available. DO NOT mix oil types.

Note: *For easier access to the fill plug, remove the drive chain cover (see **Figure 18**).*

To check gearbox oil level:

1. Remove gearbox oil fill plug (see **Figure 18**).

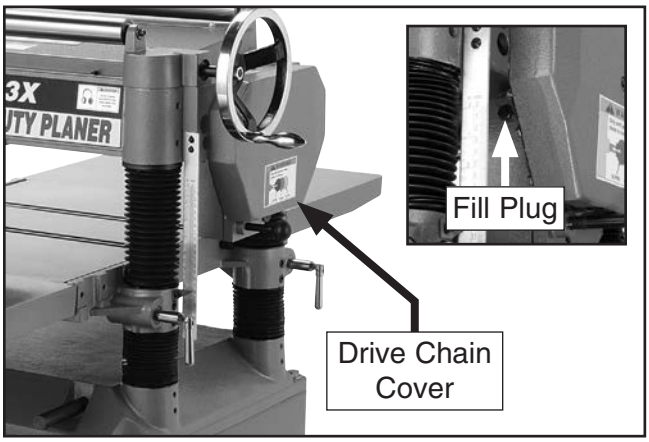

Figure 18. Location of gearbox oil fill plug.

2. Wipe clean the 6mm hex wrench that came with your machine, dip the short end of it inside fill hole, and then remove it.

— If the end of the hex wrench *is* coated with oil, then the gearbox oil level is okay. Replace the fill plug and continue setup.

— If the end of the hex wrench *is not* coated with oil, then you need to add more oil. Refer to **Gearbox Oil** on **Page 34** for instructions on how to do this.

Note: *We recommend that you replace the gearbox oil after the first 20 hours of operation. This is a normal break-in procedure and will help maximize the service life of the machine by flushing away any particles from the break-in and manufacturing process.*

Test Run

Once assembly is complete, test run the machine to ensure it is properly connected to power and safety components are functioning correctly.

If you find an unusual problem during the test run, immediately stop the machine, disconnect it from power, and fix the problem BEFORE operating the machine again. The **Troubleshooting** table in the **SERVICE** section of this manual can help.

The Test Run consists of verifying the following: 1) The motor powers up and runs correctly, and 2) the STOP/ button safety feature functions properly (G1033X only).

⚠WARNING

Serious injury or death can result from using this machine BEFORE understanding its controls and related safety information. DO NOT operate, or allow others to operate, machine until the information is understood.

⚠WARNING

DO NOT start machine until all preceding setup instructions have been performed. Operating an improperly set up machine may result in malfunction or unexpected results that can lead to serious injury, death, or machine/property damage.

To test run machine:

1. Clear all tools and objects away from machine.
2. **G1033X Only:** Push STOP button in.
3. Connect machine to power supply.
4. **G1033X Only:** Twist STOP button clockwise until it springs out (see **Figure 19**). This resets switch so machine can start.

Figure 19. Resetting STOP button (G1033X).

5. Press START button to turn machine ***ON***. Verify motor starts up and runs smoothly without any unusual problems or noises.
6. Press STOP button to turn machine ***OFF***.
7. **G1033X Only:** WITHOUT resetting STOP button, try to start machine by pressing the START button. The machine should not start.
   - — If the machine *does not* start, the STOP button safety feature is working correctly. Congratulations! Test Run is complete.
   - — If the machine *does* start (with the STOP button pushed in), immediately disconnect power to the machine. The STOP button safety feature is not working correctly and must be replaced before further using the machine. Call Tech Support for help.

Recommended Adjustments

The adjustments listed below have been performed at the factory. However, because of the many variables involved with shipping, we recommend that you at verify the adjustments to ensure the best possible results from your new machine.

Step-by-step instructions for these adjustments can be found in the **SERVICE** section starting on **Page 35**.

Factory adjustments that should be verified:

- Tensioning/replacing V-belts (**Page 38**).
- Calibrating table height scale (**Page 44**).
- Checking pulley alignment (**Page 45**).

NOTICE

After approximately 16 hours of operation, V-belts will stretch and seat into pulley grooves and need to be properly tensioned to avoid severely reducing life of V-belts. Refer to Tensioning/Replacing V-Belts on Page 38 for detailed instructions.

SECTION 4: OPERATIONS

Operation Overview

The purpose of this overview is to provide the novice machine operator with a basic understanding of how the machine is used during operation, so the machine controls/components discussed later in this manual are easier to understand.

Due to the generic nature of this overview, it is **not** intended to be an instructional guide. To learn more about specific operations, read this entire manual, seek additional training from experienced machine operators, and do additional research outside of this manual by reading "how-to" books, trade magazines, or websites.

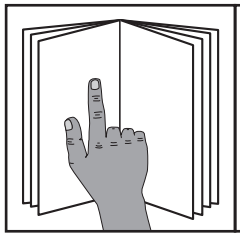

WARNING

To reduce your risk of serious injury, read this entire manual BEFORE using machine.

WARNING

Eye injuries, respiratory problems, or hearing loss can occur while operating this tool. Wear personal protective equipment to reduce your risk from these hazards.

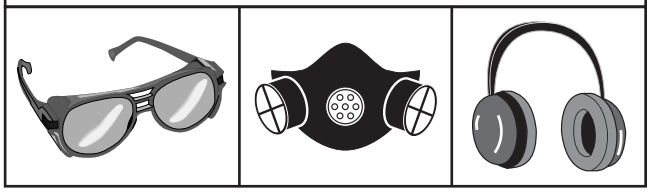

NOTICE

If you are not experienced with this type of machine, WE STRONGLY RECOMMEND that you seek additional training outside of this manual. Read books/magazines or get formal training before beginning any projects. Regardless of the content in this section, Grizzly Industrial will not be held liable for accidents caused by lack of training.

To complete a typical operation, the operator does the following:

1. Examines workpiece to make sure it is suitable for planing.

2. Puts on safety glasses or face shield, a respirator, and hearing protection.

3. Places workpiece on table with flat side down and correctly adjusts table height for workpiece thickness and depth of cut.

   — If workpiece is bowed, operator surface planes workpiece on a jointer until one side is flat. Doing so ensures that it sits solidly on planer table during operation.

4. When all safety precautions have been taken, turns planer ***ON***.

5. Stands to one side of planer path to reduce risk of kickback injuries, then feeds workpiece into planer until infeed roller grabs it.

   Note: *Infeed and outfeed rollers control feed rate of workpiece as it passes through planer. Operator does not push or pull on workpiece.*

   — If cut is too deep and bogs down planer, operator immediately reduces depth of cut.

6. Once workpiece is clear of outfeed roller and stops moving, operator removes workpiece from outfeed table and measures workpiece thickness. If further planing is required, operator raises table slightly, such as ½-turn of table height handwheel (approximately ¼ to ½ turn of the handwheel), then feeds workpiece into front of planer again.

7. Operator continues process until desired workpiece thickness is achieved, then turns machine ***OFF***.

Workpiece Inspection

Some workpieces are not safe to use or may require modification before they are. **Before cutting, inspect all workpieces for the following:**

- **Material Type:** This machine is only intended for workpieces of natural wood fiber Attempting to use workpieces of any other material that may break apart during operation could lead to serious personal injury and property damage.

- **Foreign Objects:** Inspect lumber for defects and foreign objects (nails, staples, embedded gravel, etc,). If you have any question about the quality of your lumber, DO NOT use it. Remember, wood stacked on a concrete floor can have small pieces of stone or concrete pressed into the surface.

- **Large/Loose Knots:** Loose knots can become dislodged during operation. Large knots can cause kickback and machine damage. Always use workpieces that do not have large/loose knots.

- **Wet or "Green" Stock:** Avoid using wood with a high water content. Wood with more than 20% moisture content or wood exposed to excessive moisture (such as rain or snow), will cut poorly and cause excessive wear to the machine. Excess moisture can also hasten rust and corrosion of the machine and/or individual components.

- **Excessive Warping:** Workpieces with excessive cupping, bowing, or twisting are dangerous to cut because they are unstable and often unpredictable when being cut. DO NOT use workpieces with these characteristics!

- **Minor Cupping:** Workpieces with slight cupping can be safely supported if the cupped side is facing the table. On the contrary, a workpiece supported on the bowed side will rock during operation and could cause severe injury from kickback.

Wood Types

The species of wood, as well as its condition, greatly affects the depth of cut the planer can effectively take with each pass.

The chart in the figure below shows the Janka Hardness Rating for a number of commonly used species. The larger the number, the harder the workpiece, and the less material should be removed in any one pass for good results.

Note: *The Janka Hardness Rating is expressed in pounds of force required to embed a 0.444" steel ball into the surface of the wood to a depth equal to half the ball's diameter.*

Species	Janka Hardness
Ebony	3220
Red Mahogany	2697
Rosewood	1780
Red Pine	1630
Sugar Maple	1450
White Oak	1360
White Ash	1320
American Beech	1300
Red Oak	1290
Black Walnut	1010
Teak	1000
Black Cherry	950
Cedar	900
Sycamore	770
Douglas Fir	660
Chestnut	540
Hemlock	500
White Pine	420
Basswood	410
Eastern White Pine	380
Balsa	100

Figure 20. Janka Hardness Rating for some common wood species.

Planing Tips

- Inspect your lumber for twisting or cupping, and surface one face on a jointer if necessary before planing workpiece.
- Scrape off all glue when planing glued-up panels. Dried glue can quickly dull knives/inserts.
- DO NOT plane more than one piece at a time. Never plane multiple pieces side by side.
- Never remove more than the recommended amount of material on each pass. Only remove a small amount of material on each pass when planing wide or dense stock.
- Support the workpiece on both ends. Get assistance from another person if you are planing long lumber, or use roller stands to support the workpiece.
- Measure the workpiece thickness with calipers to get exact results.
- Carefully inspect all stock to make sure it is free of large knots or foreign objects that may damage your knives/inserts, cause kickback, or be ejected from the planer.
- When possible, plane equal amounts on each side of the board to reduce the chance of twisting or cupping.
- Use the entire width of the planer to wear knives/inserts evenly. With narrow workpieces, alternate between far left, far right, and the middle of the table. Your knives/inserts will remain sharp much longer.
- To avoid "chip marks," always plane WITH the grain direction of the wood. Never plane cross-grain or end-grain.
- Plane ONLY natural wood fiber. Do not plane wood composites or other materials that could break up in the planer and cause operator injury or damage to planer.
- Always true cupped or warped stock on a jointer before planing.

Cutting Problems

Below is a list of wood characteristics you may encounter when planing. The following descriptions of defects will give you some possible answers to problems you may encounter while planing different materials. Possible solutions follow the descriptions.

Chipped Grain

Problem: Usually a result of cutting against the grain, planing lumber with knots or excessive amount of cross grain, or using dull knives/inserts.

Note: *Some amount of chipping is normal with highly figured wood.*

Solution: Decrease the depth of cut. Reduce the feed rate. Inspect your lumber and determine if its grain pattern is causing the problem. If the lumber does not show substantial crossgrain, inspect your knives/inserts.

Fuzzy Grain

Problem: Usually caused by surfacing lumber with too high of a moisture content. Sometimes fuzzy grain is an unavoidable characteristic of some woods, such as basswood. Fuzzy grain can also be caused by dull knives/inserts.

Solution: Check the lumber with a moisture meter. If moisture is greater than 20%, sticker the lumber and allow it to dry. Otherwise, inspect the knife/insert condition.

Snipe

Problem: Occurs when board ends have more material removed than the rest of the board. Usually caused when the workpiece is not properly supported as it goes through the machine. In many cases, however, a small amount of snipe is inevitable.

Solution: Hold workpiece up slightly as it leaves the outfeed end of the planer. The best way to deal with snipe is by planing lumber longer than your intended work length and then cutting off the excess after planing is completed.

Pitch & Glue Build-up

Problem: Glue and resin buildup on the rollers and cutterhead will cause overheating by decreasing cutting sharpness while increasing drag in the feed mechanism. The result can include scorched lumber, uneven knife/insert marks, and chatter.

Solution: Clean the rollers and cutterhead.

Chip Marks or Indentations

Problem: Chip indentation or chip bruising is the result of wood chips not being thrown away from the cutterhead and out of the machine. Instead they are carried around the cutterhead, deposited on the planed surface and crushed by the outfeed roller. Some of the causes of chip indentation are:

- Wood chips/sawdust not being properly expelled from the cutterhead.
- The type of lumber being planed. Certain species have a tendency to chip bruise.
- A high moisture content (over 20%) or surface moisture (refer to **Workpiece Inspection**).
- Dull knives/inserts.
- Excessive depth of cut.

Solution:

- Use a proper dust-collection system; adjust chip deflector in or out as necessary.
- Lumber must be completely dry, preferably kiln-dried (KD). Air-dried (AD) lumber must be seasoned properly and have no surface moisture. DO NOT surface partially-air-dried (PAD) lumber.
- Make sure planer knives/inserts are sharp.
- Reduce depth of cut.

Rippled Cut

Problem: Regularly spaced indentations across face of workpiece are caused by excessive outfeed roller pressure or excessive feed rate.

Solution: Reduce outfeed roller pressure; reduce feed rate.

Depth of Cut

Table Movement
One Full Revolution of Handwheel.....1/16"

Material Thickness Range
Minimum–Maximum Stock Thickness .....1/4"–8"

The depth of cut on a planer means the amount of material that is removed from the top of the workpiece as it passes underneath the cutterhead.

The depth of cut is set by adjusting the distance of the table below the cutterhead. This distance is the thickness of the workpiece minus the depth of cut. The planing depth of cut is controlled by using the table height handwheel on the right side of the machine. Rotating the handwheel clockwise raises the table.

Although the correct depth of cut varies according to wood hardness and workpiece width, we recommend the maximum depth of cut (per pass) be no more than 1/16". A series of light cuts will give better end results and put less stress on the planer than trying to take off too much material in a single pass.

The depth of cut can be referenced directly from the scale on the front of the planer, as shown in the figure below.

Note: *The scale functions as a general guide only, and is not intended for low-tolerance, precision results. To ensure accuracy, use a tape measure or caliper to measure your workpiece thickness after each pass.*

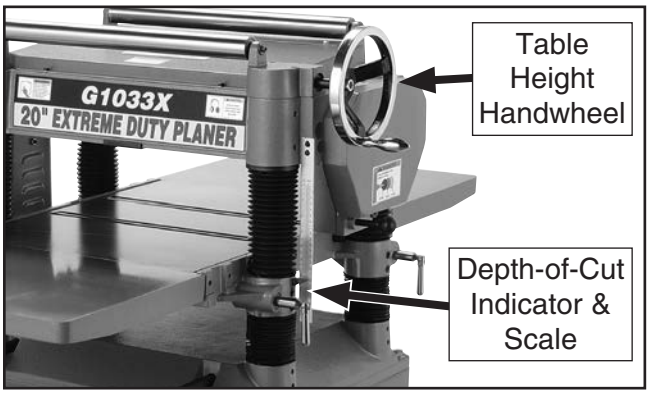

Figure 21. Location of depth-of-cut controls (G1033X shown).

Bed Roller Height

Bed Roller Height Range .....0.002"–0.020"

The correct height of the bed rollers will vary, depending on the type of material you intend to plane. However, as a general rule, keep the bed roller height range within the listed range above the table surface, as illustrated.

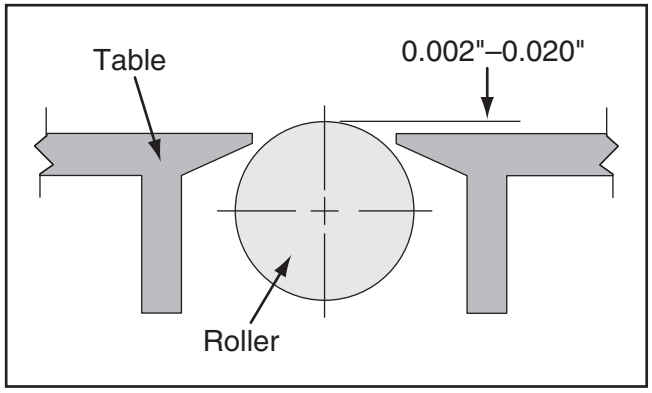

Figure 22. Recommended bed roller height above the table surface.

When planing rough stock, set the rollers high to keep the lumber from dragging along the bed. When planing milled lumber, set the rollers low to help minimize snipe.

To ensure accurate results and make the adjustment process quicker and easier, we recommend using a Rotacator (refer to **Accessories**) to gauge the bed roller height from the table surface. If a Rotacator is not available, a straightedge and feeler gauges can be used, but care must be taken to achieve accurate results.

NOTICE

Bed rollers that are not adjusted to the correct height or out of alignment with each other can cause poor finishes, inconsistent planing thickness, and other undesirable results.

Items Needed	**Qty**
Hex Wrench 3mm	1
Open-End Wrench 14mm	1
Rotacator (optional, **Page 30**)	1

To adjust bed rollers:

1. DISCONNECT MACHINE FROM POWER!

2. Completely lower table to give yourself enough room to work.

3. Loosen set screw above each of four roller adjustment cams—there are two on each side of planer table (see **Figure 23**).

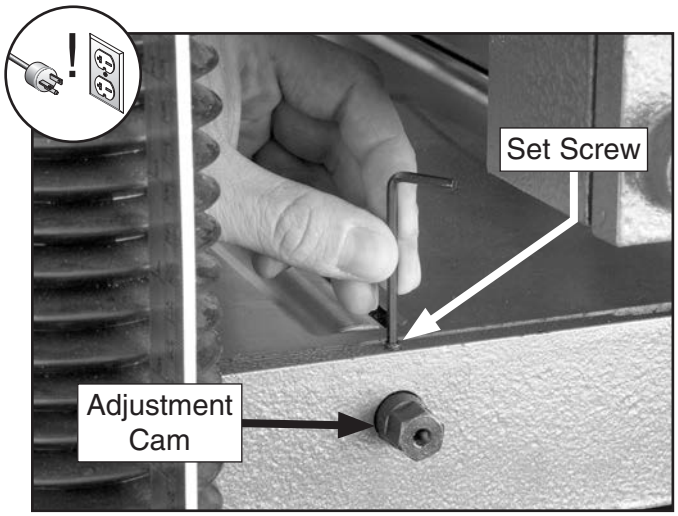

Figure 23. Location of bed roller height controls (two on each side of planer table).

4. Rotate eccentric adjustment cams to raise or lower bed rollers to desired height above table surface.

5. Verify both sides of each roller are at the same height, then re-tighten set screws to secure in place.

6. Re-check roller heights to make sure they did not change while being secured.

   —If roller heights are not correct, repeat this procedure until they are.

Setting Feed Rate

NOTICE

Only change the feed rate when the planer is running, but DO NOT attempt to change the feed rate during any cutting operations or damage to the gearbox will result.

High Feed Rate .....28 FPM
Low Feed Rate .....16 FPM

The infeed and outfeed rollers move the workpiece through the planer while keeping it flat and providing a consistent rate of movement. The speed that these rollers move the workpiece through the planer is the feed rate.

Generally, low feed rates are used for dimensioning passes, while higher feed rates are used for finishing passes.

The figure below illustrates the three different positions of the feed rate control knob:

- Push knob in to use high feed rate.
- Pull the knob out to use the low feed rate.
- Move knob to center position to place gearbox in neutral.

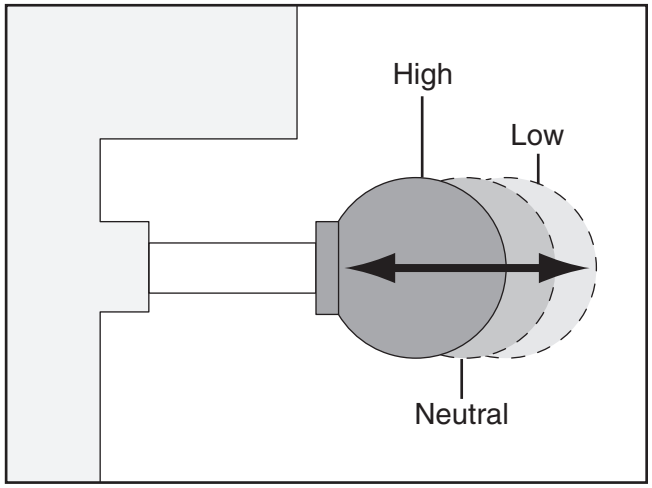

Figure 24. Feed rate control knob positions.

Adjusting/Replacing Knives (G1033 & G1033Z)

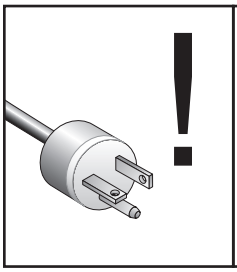

⚠WARNING

To reduce risk of shock or accidental startup, always disconnect machine from power before adjustments, maintenance, or service.

⚠CAUTION

Cutterhead knives are extremely sharp. Accidental contact with knives can result in severe cuts. Take great caution whenever working with or around cutterhead knives. Wear heavy leather gloves to reduce risk of severe cuts.

NOTICE

To maintain accurate and consistent planing results, we do not recommend sharpening knives yourself. Instead, just replace dull knives or have them professionally sharpened.

Setting the height of the knives correctly is crucial to the proper operation of your planer and is very important in keeping the knives sharp. If one knife protrudes higher than the others, it will do the majority of the work, dull much faster, and produce poor cutting results.

The knife-setting jig included with this planer is designed to set the knives at a uniform distance of 0.070" above the cutterhead surface.

Note: *If you need to replace or sharpen a knife, you can remove the knife from the cutterhead during* ***Step 4*** *of the following procedure. Thoroughly clean out any debris from the knife slots before replacing the knives.*

Replacement knives are available through Grizzly (refer to ***Accessories*** *for options).*

Items Needed	Qty
Phillips Screwdriver #2	1
Open-End Wrench 12, 13mm	1 Ea.
Hex Wrench 3mm	1
Knife-Setting Jig	1

To adjust height of knives:

1. DISCONNECT MACHINE FROM POWER!

2. Remove dust hood and top cover to expose cutterhead.

3. Put on heavy leather gloves.

4. Remove belt cover, then rotate cutterhead pulley to provide access to one of the knives.

Note: *The cutterhead for Models G1033 and G1033Z ships with both springs and jack screws to adjust the knife height (see* ***Figure 25****)—which one you use is a matter of personal preference. However, if you use the springs, you must first remove the jack screws from the cutterhead before proceeding.*

— The advantage of using springs is that springs maintain a constant upward pressure on the knives while using the knife-setting jig during **Step 6**.

— The advantage of using jack screws is that once you set the proper height of the screws, they should require little to no adjustment when replacing the knives.

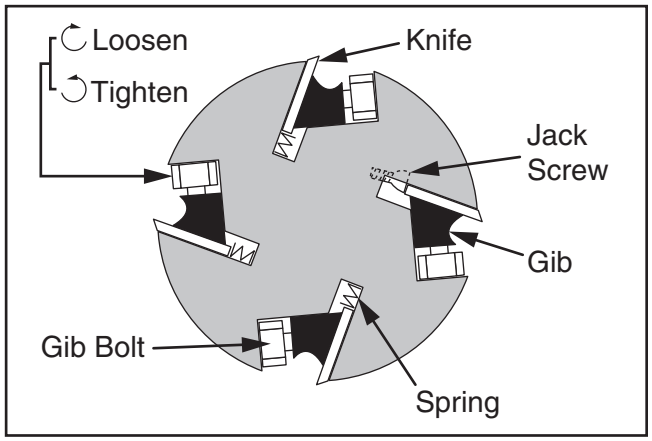

Figure 25. G1033 and G1033Z cutterhead components.

5. Loosen cutterhead gib bolts until knife is completely loose.

— If you are replacing the knives, remove the old knife and install the new one, making sure the beveled edge of the new knife is facing the correct direction.

6. Position knife-setting jig over knife so that knife edge is directly under center pad, as shown below.

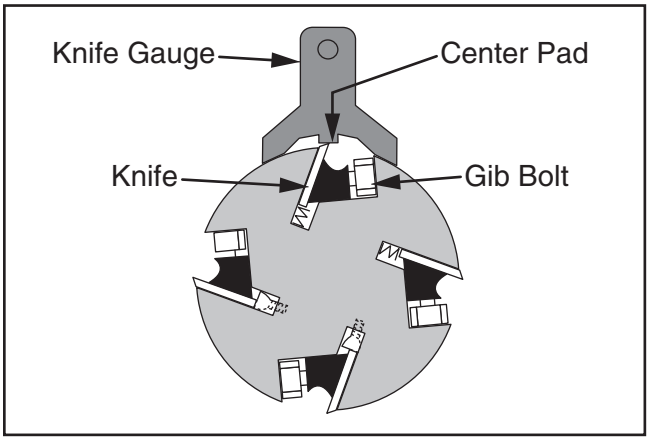

Figure 26. Knife-setting jig correctly positioned over knife.

7. **Jack Screws:** Insert hex wrench into access holes in cutterhead (see **Figure 27**), and rotate jack screws to raise or lower knife until it barely touches center pad of knife-setting jig with all legs of jig still firmly on cutterhead, then snug gib bolts enough to hold knife in place without fully tightening gib bolts (see **Figure 28**).

   Springs: Insert hex wrench into access holes in cutterhead (see **Figure 27**), and remove jack screws. Push down on knife jig until all legs of jig are firmly on cutterhead and knife just touches center pad of jig, then tighten gib bolts just enough to hold knife in place (see **Figure 28**).

   Note: *Do not fully tighten gib bolts yet.*

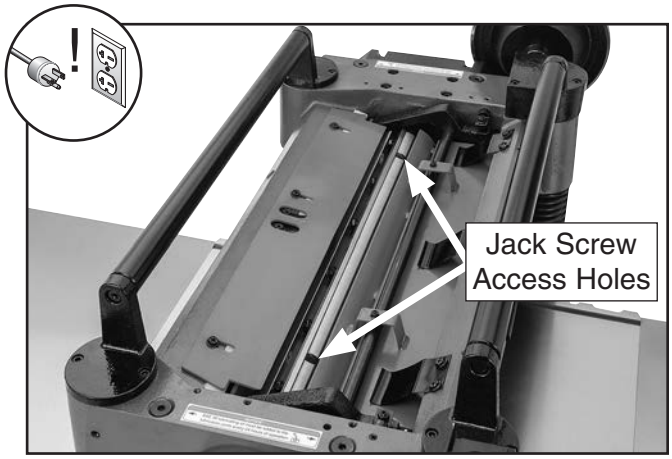

Figure 27. Example of jack screw access holes in cutterhead.

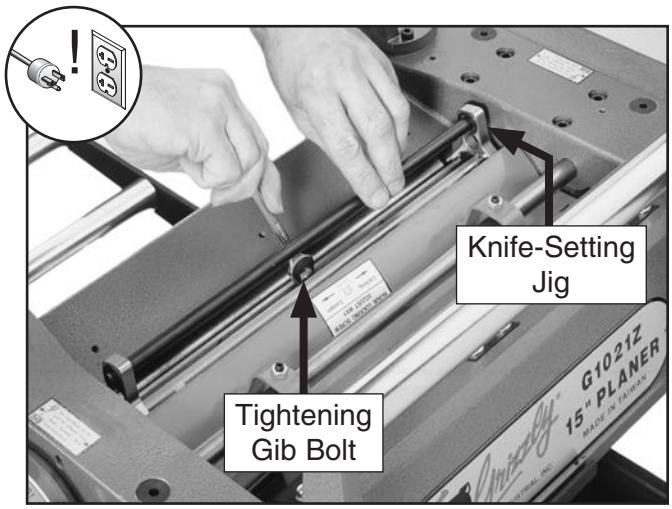

Figure 28. Example of using knife-setting jig to set knife height.

8. Incrementally snug gib bolts in an even manner, starting at middle and working your way to ends by alternating left and right, as illustrated.

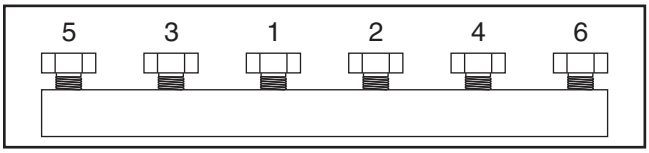

Figure 29. Gib bolt tightening sequence.

9. Repeat **Step 8**, snugging gib bolts a little more.

10. Repeat **Step 8**, this time fully tightening all gib bolts.

11. Repeat **Steps 4–8** for remaining knives.

Rotating/Replacing Cutterhead Inserts (G1033X)

The helical cutterhead is equipped with 4-sided indexable carbide inserts. Each insert can be removed, rotated, and re-installed to use any one of its four cutting edges. Therefore, if one cutting edge becomes dull or damaged, simply rotate it 90˚ (as shown below) to use a sharp cutting edge.

The inserts have a reference dot on one corner. The position of the reference dot on installed inserts can be used to track which edges are sharp/unused and which edges are dull or damaged. Replace inserts once the reference dot has been rotated back to its original position.

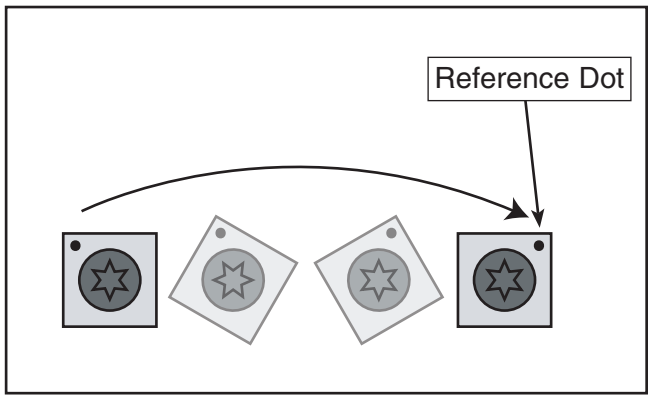

Figure 30. Insert rotating sequence.

Items Needed	Qty
Phillips Screwdriver #2	1
Wrench or Socket 10mm	1
Torque Wrench	1
T-25 Torx Bit	1

To rotate or replace a helical cutterhead insert:

1. DISCONNECT MACHINE FROM POWER!

2. Remove dust hood, top cover, and belt cover.

⚠CAUTION

The carbide inserts are very sharp and can quickly cut your hands. ALWAYS use caution when handling these parts to reduce the risk of personal injury.

3. Remove any sawdust or debris from head of insert, Torx screw, and surrounding area (see **Figure 31**).

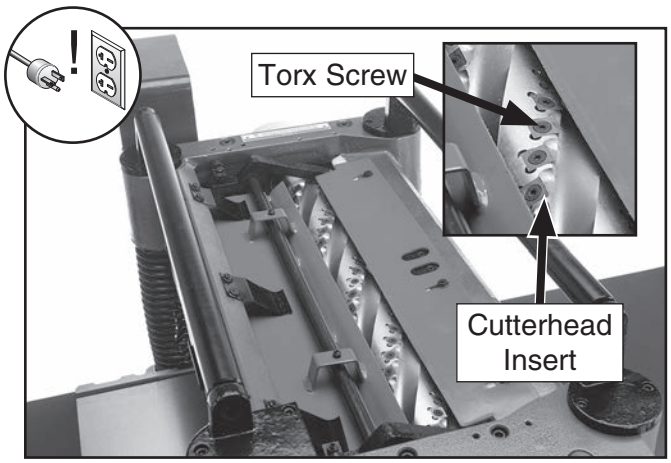

Figure 31. Example of cutterhead inserts and Torx screws.

4. Remove Torx screw and insert, then clean all dust and debris from both parts and cutterhead pocket.

Note: *Proper cleaning of insert, Torx screw, and cutterhead pocket is critical to achieving a smooth finish. Dirt or dust trapped between insert and cutterhead will raise insert, and make marks on your workpiece when planing.*

Tip: *Use low-pressure compressed air or a vacuum nozzle to clean out cutterhead pocket.*

5. Replace insert so that a fresh cutting edge faces outward.

— If all four insert cutting edges have been used, replace insert with a new one. Always position insert reference dot in same position when installing a new insert to aid in rotational sequencing.

6. Lubricate Torx screw threads with a very small amount of light machine oil, wipe excess off, and torque screw to 50–55 inch/pounds.

Note: *If too much oil is applied to the threads, excess oil will attempt to squeeze out of the threaded hole and raise insert during installation, bringing it out of height alignment.*

SECTION 5: ACCESSORIES

⚠WARNING

Installing unapproved accessories may cause machine to malfunction, resulting in serious personal injury or machine damage. To reduce this risk, only install accessories recommended for this machine by Grizzly.

NOTICE

Refer to our website or latest catalog for additional recommended accessories.

W1218A—Rotacator™ Precision Planer Tool
The Rotacator is a dial indicator on a magnetic base, designed for quickly and accurately setting the critical tolerances needed when making planer adjustments. Perfect for adjusting infeed/outfeed rollers, pressure bars, chip breakers, and bed rollers. Also a great setup tool for other machines! Accurate to 0.001". Indicator rotates 360°.

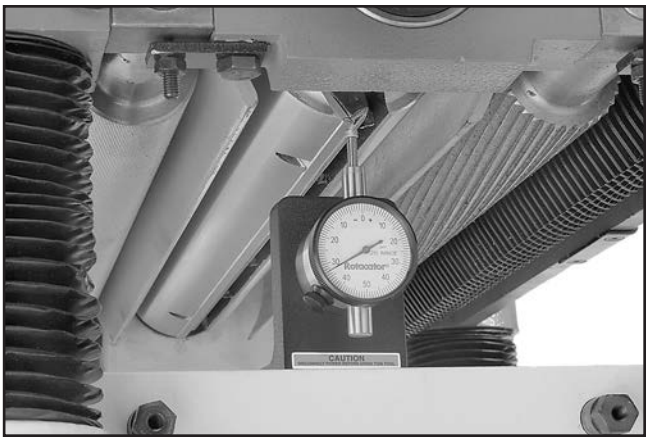

Figure 32. W1218A Rotacator™ Precision Planer Tool.

For G1033 & G1033Z:
H7769—20" Byrd® Shelix Cutterhead
Made in the U.S.A. by Byrd, this indexable carbide insert cutterhead is the best money can buy—period! The inserts are not only placed in a spiral pattern, they are also positioned at an angle so the shearing action leaves a glassy smooth cut on the toughest and most figured woods. Comes with 5 extra replacement inserts. Great upgrade!

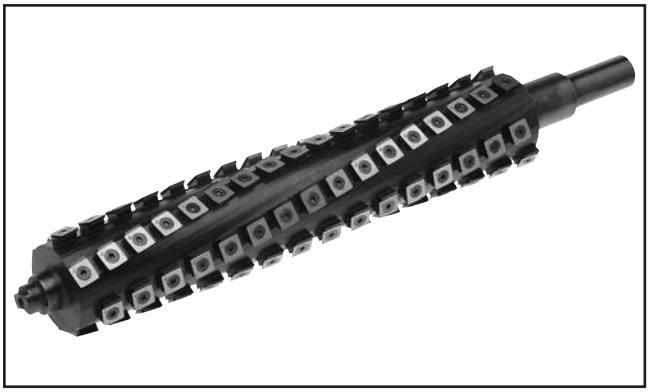

Figure 33. H7769 Byrd Shelix Cutterhead.

For G1033X:
H9893—Indexable Carbide Inserts, 10-Pack
These Indexable Carbide Inserts are designed for use in spiral or helical cutterhead systems and made to last up to 10 times longer than a set of HSS steel inserts. Made of solid carbide. Size: 15 x 15 x 2.5mm.

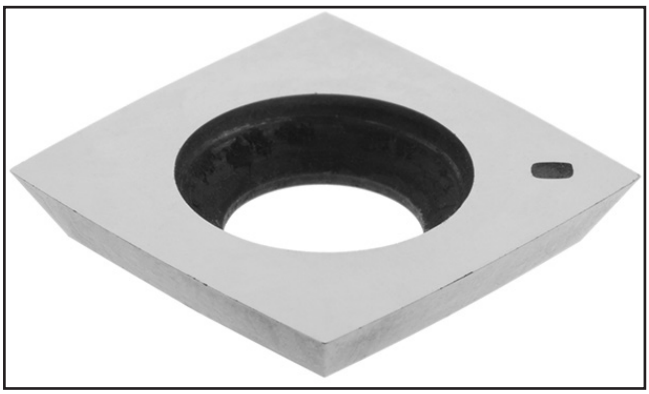

Figure 34. H9893 Indexable Carbide Inserts.

For G1033 & G1033Z:

T10153—20" Replacement Knives, Set of 4

These Japanese-made 20" x 1" x ⅛" planer knives will outlast any other steel knives on the market—period! Manufactured from a superior blend of quality steel and double-ground to a 42° + 45° edge angle, and including a higher percentage of Molybdenum for longer edge retention, these knives will not disappoint!

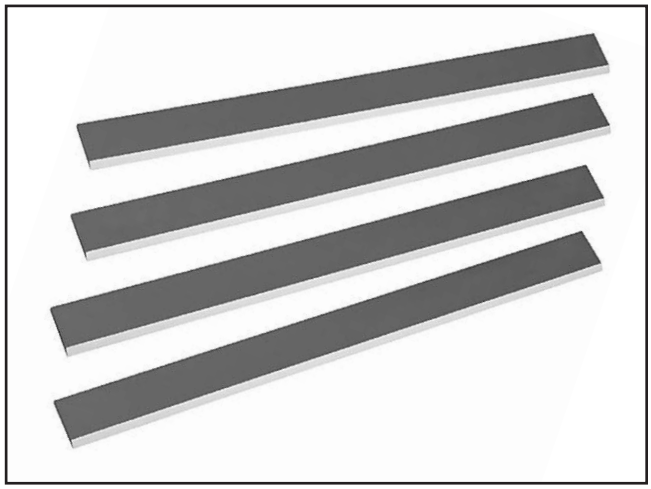

Figure 35. 20" Grizzly planer knives.

G5562—SLIPIT® 1 Qt. Gel
G5563—SLIPIT® 12 Oz. Spray
G2871—Boeshield® T-9 12 Oz. Spray
G2870—Boeshield® T-9 4 Oz. Spray
H3788—G96® Gun Treatment 12 Oz. Spray
H3789—G96® Gun Treatment 4.5 Oz. Spray

Figure 36. Recommended products for protecting unpainted cast iron/steel parts on machinery.

SB1365—South Bend Way Oil-ISO 68

Engineered for the high pressure exerted on horizontal or vertical ways and slides. Protects against rust and corrosion. Ensures stick-free, smooth motion which maximizes finishes and extends the life of your machine. Won't gum up! 12 oz. AMGA#2 (ISO 68 Equivalent).

Figure 37. SB1365 Way Oil.

T28042—Moly-D Industrial Gear Oil-ISO 320

This industrial gear oil from Primrose has been developed specifically for the high temperatures and pressures typical of modern industrial applications. 1-gallon size.

Figure 38. T28042 Gear Oil.

T26419—Syn-O-Gen Synthetic Grease

100% pure synthesized hydrocarbon basestocks compounded with special thickeners and additives make Syn-O-Gen non-melt, tacky, and water resistant. Extremely low pour point, high temperature oxidation, and thermal stability produce a grease unmatched in performance.

Figure 39. T26419 Synthetic Grease.

SECTION 6: MAINTENANCE

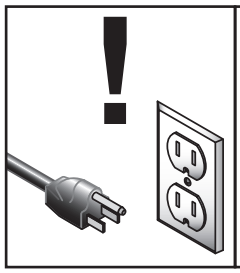

WARNING

To reduce risk of shock or accidental startup, always disconnect machine from power before adjustments, maintenance, or service.

Schedule

For optimum performance from your machine, follow this maintenance schedule and refer to any specific instructions given in this section.

Note: *This maintenance schedule is based on average daily usage. Adjust the maintenance schedule to match your usage, to keep your planer running smoothly, and to protect your investment.*

Ongoing:
- Clean machine and protect unpainted cast iron.
- Lubricate feed rollers bushings (**Page 33**).
- Tighten loose mounting bolts.
- Check/sharpen/replace damaged or worn knives/inserts (**Page 26**).
- Check/repair/replace worn or damaged wires.
- Resolve any other unsafe condition.

Every 40 Hours of Operation:
- Clean cutterhead and, for knife models, check knife height (**Page 26**).
- Lubricate table columns and leadscrews (**Page 33**).

Every 160 Hours of Operation:
- Check/tension/replace V-belts (**Page 38**).
- Clean/vacuum dust buildup from inside cabinet and off motor.
- Lubricate table height worm gear (**Page 33**).
- Lubricate table height chain and sprockets (**Page 33**).
- Lubricate drive chain and sprockets (**Page 34**).

Yearly:
- Change gearbox oil (**Page 34**).

Cleaning & Protecting

Vacuum excess wood chips and sawdust, and wipe off the remaining dust with a dry cloth. If any resin has built up, use a resin-dissolving cleaner to remove it.

Protect the unpainted cast-iron table by wiping it clean after every use—this ensures moisture from wood dust does not remain on bare metal surfaces. Keep the table rust-free with regular applications of products like G96® Gun Treatment, SLIPIT®, or Boeshield® T-9 (see **Page 31** for more details).

Lubrication

NOTICE

Failure to follow reasonable lubrication practices as instructed in this manual for your machine could lead to premature failure of components and void the warranty.

Your planer features bearings that are lubricated and sealed at the factory. These bearings do not require any further attention unless they need to be replaced. If a bearing fails, your planer will probably develop a noticeable rumble or vibration, which will increase when the machine is under a load. The bearings are standard sizes and can be replaced through Grizzly.

Follow the maintenance schedule on this page and the procedures beginning on **Page 33** to properly lubricate the other planer components, which are essential for long life and trouble-free operation of your planer.

Feed Roller Bushings

Oil Type ..... SB1365 or ISO 68 Equivalent
Oil Amount..... 2–3 Drops
Frequency..... Every 8 Hours of Operation

The infeed and outfeed rollers rotate inside bushing blocks on both ends of the rollers. Add 2–3 drops of ISO 68 machine oil to the center hole of the four feed roller tension adjustment bolts on top of the head casting, as shown in **Figure 40**.

Figure 40. Lubrication locations for feed roller bushings.

Columns & Leadscrews

Oil Type ..... SB1365 or ISO 68 Equivalent
Oil Amount.....Thin Coat
Grease Type ..... NLGI#2 Equivalent
Frequency..... Every 40 Hours of Operation

The table rides on the columns and is moved by the rotation of the leadscrews inside the columns. Loosen the dust sleeve to access the columns and leadscrews (see **Figure 41**). Apply a thin coat of ISO 68 machine oil to the outside surface of the columns and brush on a light application of multi-purpose grease to the leadscrew threads. Move the table up and down to distribute the lubricant.

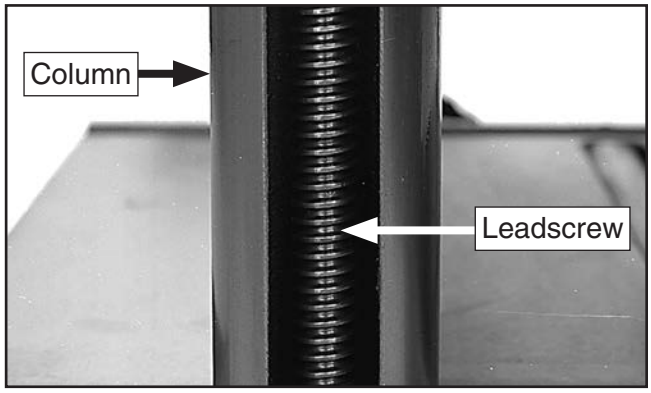

Figure 41. Dust sleeve removed to expose column and leadscrew for lubrication.

Table Height Worm Gear

Grease Type ..... T26419 or NLGI#2 Equivalent
Frequency..... Every 160 Hours of Operation

Remove the three cap screws that secure the worm gear housing (see **Figure 42**), then lift the housing and handwheel assembly off the machine. Clean away any debris from the housing and gears, then brush on a moderate amount of multi-purpose grease to the gear teeth.

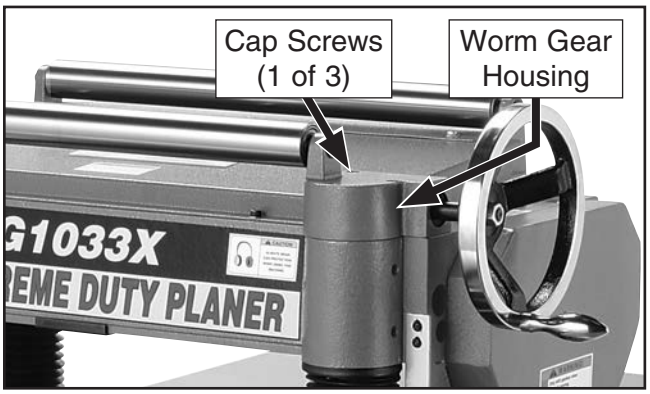

Figure 42. Location of table height worm gear housing.

Table Height Chain & Sprockets

Grease Type ..... T26419 or NLGI#2 Equivalent
Frequency..... Every 160 Hours of Operation

The table leadscrews are synchronized by the table height chain and sprockets located underneath the planer base (see **Figure 43**). Use shop rags and mineral spirits to clean away debris and grime, then brush a light coat of multi-purpose grease onto the chain and sprockets.

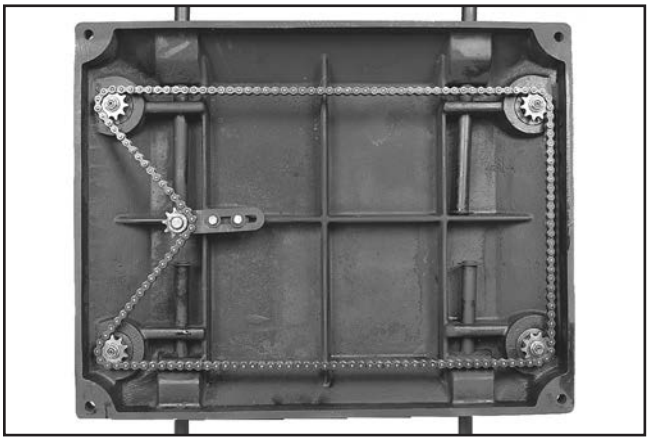

Figure 43. Table height chain and sprockets as viewed from underneath the base.

Drive Chain & Sprockets

Grease Type ..... T26419 or NLGI#2 Equivalent
Frequency..... Every 160 Hours of Operation

The infeed and outfeed rollers receive the transferred power from the cutterhead through the drive chain system on the right side of the machine, as shown in **Figure 44**.

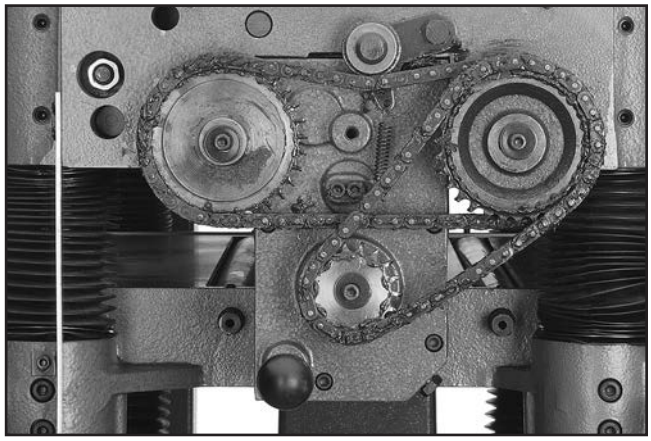

Figure 44. Gearbox cover removed to expose drive chains and sprockets for lubrication.

Remove the table height handwheel and the safety covers attached to the inside of the drive chain cover, then remove the cover to access these parts.

Use shop rags and mineral spirits to clean away any debris and grime, then brush a light coat of multi-purpose grease onto the chain and sprockets.

Gearbox Oil

Oil Type ..... T28042 or ISO 320 Equivalent
Oil Amount.....20 Oz.
Frequency..... After First 20 Hours, Then Yearly

Note: *SAE 140 Gear Oil or SAE 85W-140 multi-weight gear oil may also be used. DO NOT mix oil types!*

Note: *We recommend that you replace the gearbox oil after the first 20 hours of operation. This is a normal break-in procedure and will help maximize the service life of the machine by flushing away any particles from the break-in process.*

Although it is not necessary to remove the drive chain cover to access the fill and drain plugs, it is more convenient to do so (see **Figures 45–46**). Drain the old oil into a pan. Re-install the drain plug, then refill the gearbox with ISO 320 or equivalent oil until it just reaches the fill plug. Re-install the fill plug.

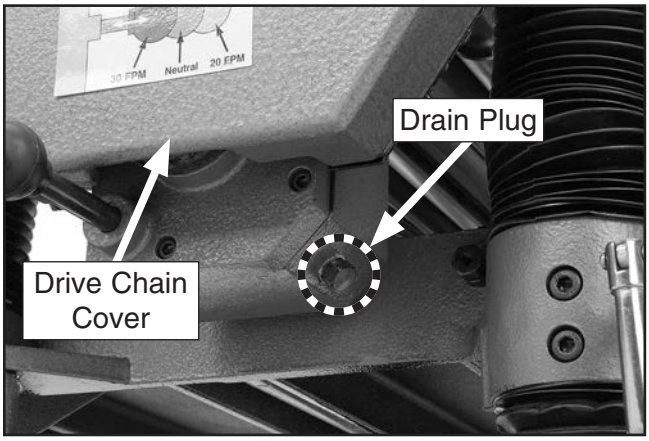

Figure 45. Location of gearbox oil drain plug.

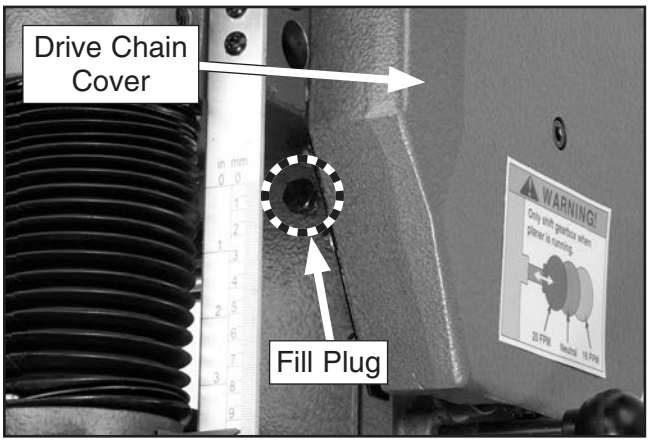

Figure 46. Location of gearbox oil fill plug.

SECTION 7: SERVICE

Review the troubleshooting procedures in this section if a problem develops with your machine. If you need replacement parts or additional help with a procedure, call our Technical Support. **Note:** *Please gather the serial number and manufacture date of your machine before calling.*

Troubleshooting

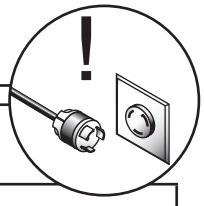

Motor & Electrical

Symptom	Possible Cause	Possible Solution
Machine does not start, or power-supply fuse/breaker trips immediately after startup.	1. STOP button depressed/at fault (G1033X). 2. Incorrect power supply voltage or circuit size. 3. Thermal overload relay has tripped. 4. Power supply circuit breaker tripped or fuse blown. 5. Wires loose, broken, or disconnected. 6. START button switch at fault (G1033X). 7. ON/OFF switch at fault (G1033, G1033Z). 8. Centrifugal switch/contact points at fault. 9. Start capacitor at fault. 10. Contactor not energized; has poor contacts. 11. Motor miswired or at fault.	1. Rotate button head to reset; replace if at fault (G1033X only). 2. Ensure correct power supply voltage and circuit size. 3. Reset; adjust trip load dial if necessary; replace. 4. Ensure circuit is sized correctly and free of shorts. Reset circuit breaker or replace fuse. 5. Check/fix broken, disconnected, or corroded wires. 6. Replace switch. 7. Replace switch. 8. Adjust/replace centrifugal switch/contact points if available. 9. Test/replace if at fault. 10. Test all legs for power/replace. 11. Test/repair/replace.
Machine stalls or is underpowered.	1. Machine undersized for task. 2. Workpiece not suitable for machine. 3. Motor overheated, causing thermal overload to trip. 4. Belt(s) slipping; oil/grease on belt(s). 5. Dull knives/inserts. 6. Dust collection problem causing internal components to clog up with shavings. 7. Centrifugal switch/contact points at fault. 8. Run capacitor at fault. 9. Pulley slipping on shaft. 10. Contactor not energized/has poor contacts. 11. Motor bearings at fault.	1. Reduce feed rate/depth of cut. 2. Only cut wood/ensure moisture is below 20%. 3. Allow motor to cool, reset overload if necessary, and reduce depth of cut. 4. Clean/tension/replace belt(s) (**Page 38**); align pulleys (**Page 45**). 5. Sharpen/replace knives (**Page 26**), or replace inserts (**Page 29**). 6. Clear blockages in dust chute/ducting, ensure dust collector is operating efficiently. 7. Adjust/replace centrifugal switch/contact points if available. 8. Test/repair/replace. 9. Tighten loose pulley; replace pulley/shaft if damaged. 10. Test all legs for power/replace. 11. Test/repair/replace.

Motor & Electrical (Cont.)

Symptom	Possible Cause	Possible Solution
Machine has vibration or noisy operation.	1. Knives dull or misaligned. 2. Motor or component loose. 3. V-belt(s) worn, loose, or slapping cover. 4. Pulley loose. 5. Bed rollers protruding unevenly. 6. Plastic chip deflector hitting knives. 7. Motor fan rubbing on fan cover. 8. Cutterhead bearings at fault. 9. Motor bearings at fault.	1. Sharpen/replace knives; set knife alignment/height correctly (**Page 26**). 2. Inspect/tighten loose bolts/nuts; replace damaged components. 3. Tension/replace belts as a matched set (**Page 38**). 4. Re-align/replace shaft, pulley set screw, and key. 5. Adjust bed rollers (**Page 25**). 6. Adjust chip deflector (**Page 43**); replace if necessary. 7. Fix/replace fan cover; replace loose/damaged fan. 8. Replace bearing(s). 9. Test by rotating shaft; rotational grinding/loose shaft requires bearing replacement.

Machine Operation

Symptom	Possible Cause	Possible Solution
Excessive snipe (gouge in end of board that is uneven with rest of cut). **Note:** A small amount of snipe is inevitable with all types of planers. The key is minimizing it as much as possible.	1. One or both of bed rollers are set too high. 2. Outfeed extension slopes down or is not level with main table. 3. Chip breaker set too low. 4. Workpiece is not supported as it leaves planer. 5. Some snipe is inevitable.	1. Lower bed rollers (**Page 25**). 2. Shim outfeed extension wing level with main table. 3. Raise height of chip breaker (**Page 39**). 4. Hold workpiece up slightly as it leaves outfeed end of planer. 5. Plane lumber longer than your intended workpiece length, then cut off excess after planing complete.
Workpiece stops/ slows in middle of cut.	1. Taking too heavy of a cut. 2. One or both of bed rollers are set too low or too high. 3. Chip breaker or pressure bar set too low. 4. Feed rollers set too low or too high. 5. Pitch and glue buildup on planer components.	1. Take a lighter cut. 2. Adjust bed rollers (**Page 25**). 3. Raise height of chip breaker or pressure bar (**Page 39**). 4. Adjust feed rollers (**Page 39**). 5. Clean internal cutterhead components with a pitch/ resin-dissolving solvent.
Chipping (consistent pattern).	1. Knots or conflicting grain direction in wood. 2. Taking too deep of a cut. 3. Feeding workpiece too fast. 4. Mis-adjusted chip breaker. 5. Nicked or chipped knife/insert.	1. Inspect workpiece for knots and grain direction; only use clean stock, and cut WITH the grain. 2. Take a smaller depth of cut. (Reduce cutting depth when planing hard woods.) 3. Slow down feed rate. 4. Adjust both sides of chip breaker to correct height. 5. Replace affected knife (**Page 26**), or have it sharpened; rotate/replace insert (**Page 29**).
Chipping/indentation in workpiece surface (inconsistent pattern).	1. Chips aren't being properly expelled from cutterhead. 2. Chip breaker not set correctly.	1. Use a proper dust-collection system. 2. Correctly adjust chip breaker (**Page 39**).

Machine Operation (Cont.)

Symptom	Possible Cause	Possible Solution
Fuzzy grain.	1. Wood may have high moisture content or surface wetness. 2. Dull knives/inserts.	1. Check moisture content is below 20% and allow to dry if moisture is too high. 2. Replace knives (**Page 26**) or have them professionally sharpened; rotate/replace inserts (**Page 29**).
Long lines or ridges that run along length of board.	1. Nicked or chipped knife/inserts.	1. Replace knives (**Page 26**) or have them professionally sharpened; rotate/replace inserts (**Page 29**).
Uneven cutting marks, wavy surface, or chatter marks across face of board.	1. Feeding workpiece too fast. 2. Chip breaker or pressure bar set unevenly or not low enough. 3. Knives not installed evenly/inserts not properly installed. 4. Worn cutterhead bearings.	1. Slow down feed rate. 2. Adjust height of chip breaker (**Page 39**). 3. Adjust knives with knife gauge (**Page 26**); remove inserts, properly clean mounting pocket and re-install (**Page 29**). 4. Replace cutterhead bearings.
Glossy surface.	1. Knives/inserts are dull. 2. Feeding workpiece too slow. 3. Cutting depth too shallow.	1. Replace knives (**Page 26**) or have them professionally sharpened; rotate/replace inserts (**Page 29**). 2. Increase feed rate. 3. Increase depth of cut.
Workpiece twists in machine.	1. Feed rollers not parallel with table.	1. Adjust feed rollers (**Page 39**).

Tensioning/ Replacing V-Belts

NOTICE

After approximately 16 hours of operation, V-belts will stretch and seat into pulley grooves and need to be properly tensioned to avoid severely reducing life of V-belts.

Three V-belts transfer power from the motor to the cutterhead, and then to the infeed and outfeed rollers with the use of the drive chain system. To ensure efficient transfer of power to these systems, make sure the V-belts are always properly tensioned and in good condition.

If the V-belts are worn, cracked, or damaged, replace them. Always replace all V-belts at the same time with a matched set of three, or belt tension may not be even among the belts, causing premature belt failure.

⚠CAUTION

V-belts and pulleys will be hot after operation. Allow them to cool before handling.

Items Needed	Qty
Phillips Screwdriver #2	1
Open-End Wrench 19mm	1

To tension/replace V-belts:

1. DISCONNECT MACHINE FROM POWER!

2. Remove V-belt cover from left side of machine to expose belts, as shown in **Figure 47**.

   Note: *A collection of black belt dust at the bottom of the belt cover is normal during the life of the belts.*

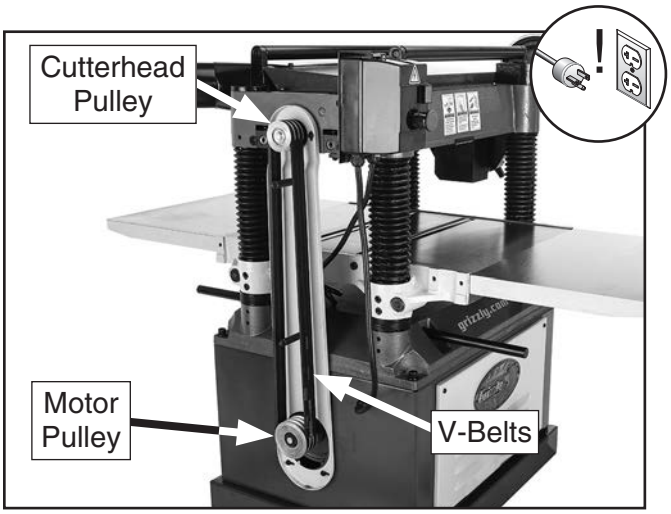

Figure 47. Example of belt cover removed to expose V-belts and pulleys.

3. Remove front cabinet cover to access motor mount hex nuts (see **Figure 48**).

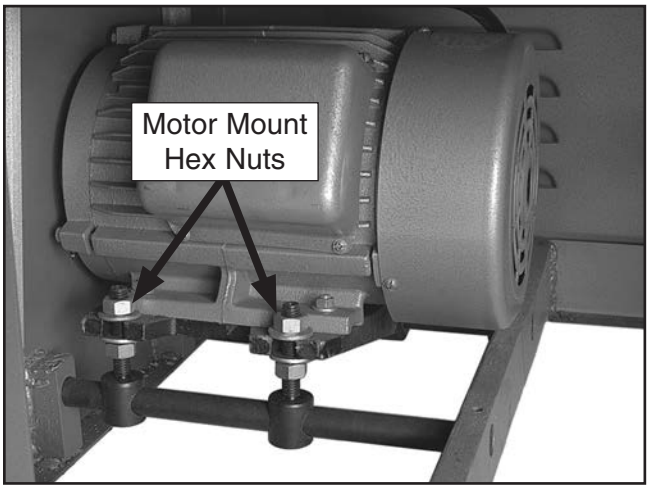

Figure 48. Front cabinet cover removed to access motor mount hex nuts.

4. If V-belts need to be replaced, raise motor to release belt tension (see next step for instructions), roll them off pulleys, then replace with a matched set of three.

5. To adjust V-belt tension, loosen both top motor mount hex nuts (see **Figure 48** on **Page 38**), then adjust bottom hex nuts to raise or lower motor.

   Note: *V-belts are correctly tensioned when there is approximately ¾" deflection when moderate pressure is applied to them midway between pulleys, as illustrated in* ***Figure 49****.*

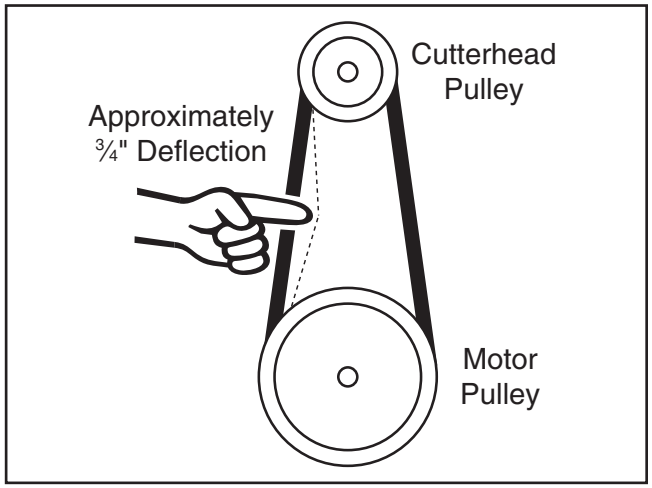

Figure 49. Belt deflection when V-belts are correctly tensioned.

6. After V-belts are correctly tensioned, tighten top motor mount hex nuts, then re-install cabinet cover and belt cover.

Setting Feed Roller, Chip Breaker & Pressure Bar Heights

It is essential that the feed rollers, chip breaker, and pressure bar are set at the correct distance below the cutterhead knives/inserts at BDC (bottom dead center) to ensure that the workpiece moves through the planer evenly and the correct distance from the cutterhead knives/inserts.

To ensure accurate results and make the adjustment process quicker and easier, we recommend using a Rotacator for these adjustments (refer to **Page 30**).

If a Rotacator is not available, a 6' 2x4 cut into two even-sized pieces and a feeler gauge set can be used, but care must be taken when jointing the wood to achieve accurate results.

Dist. Below Knife/Insert at BDC (Figure 50)

A. Infeed Roller ..... 0.040"
B. Chip Breaker..... 0.040"
C. Pressure Bar..... 0.008"
D. Outfeed Roller ..... 0.020"

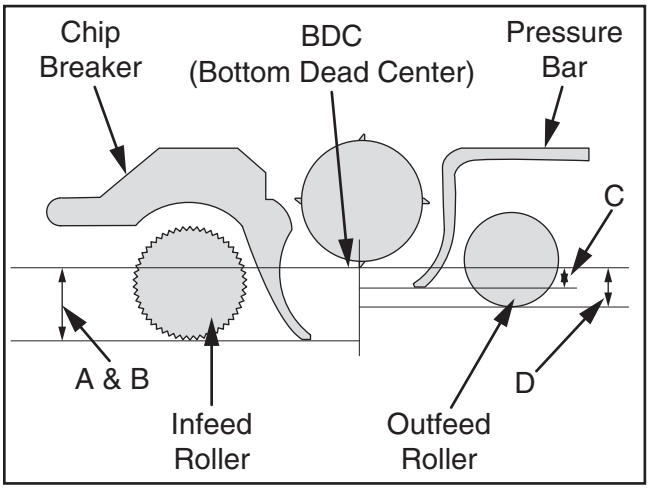

Figure 50. Planer component recommended clearances (illustration is not to scale).

Using a Rotacator

Items Needed	Qty
Phillips Screwdriver #2	1
Hex Wrenches 3mm, 5mm	1 Ea.
Wrench or Socket 10mm	1 Ea.
Rotacator (see **Page 30**)	1

To use a Rotacator to check/adjust heights:

1. DISCONNECT MACHINE FROM POWER!

2. Make sure knives are set to correct height (refer to **Adjusting/Replacing Knives** on **Page 26** for detailed instructions). If machine is helical cutterhead, make sure all inserts are properly installed (refer to **Rotating/ Replacing Cutterhead Inserts** on **Page 29** for detailed instructions).

3. Lower table at least 4" below head casting, then lock it in place.

4. Remove dust hood, top cover, belt cover, and drive chain cover.

5. Using your Rotacator, find bottom dead center (BDC) of any knife/insert edge by slowly rocking cutterhead pulley back and forth, then set Rotacator dial to "0" (see **Figure 51**).

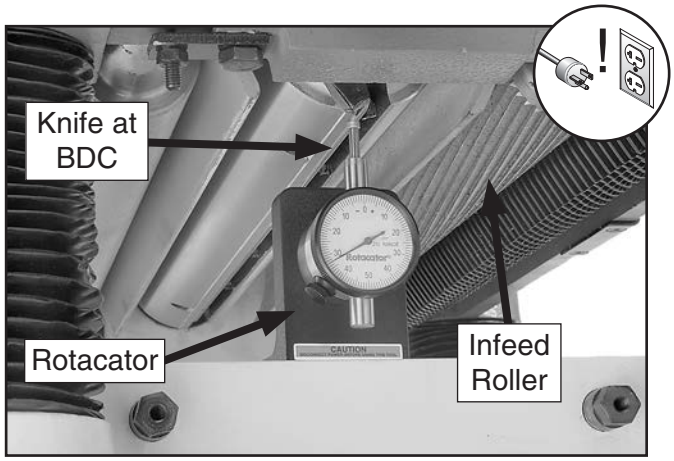

Figure 51. Example of using a Rotacator to find BDC (viewed from left side of machine).

6. Move feed rate control knob to neutral position to allow infeed roller to freely rotate.

7. Keeping Rotacator dial at "0", position it under right-hand side of infeed roller and find BDC of a serrated edge by rocking infeed roller back and forth.

8. Loosen jam nuts and use set screws on each side of feed roller as shown to adjust height of infeed roller bushing block until Rotacator dial shows 0.040", which is the recommended distance for infeed roller below cutterhead.

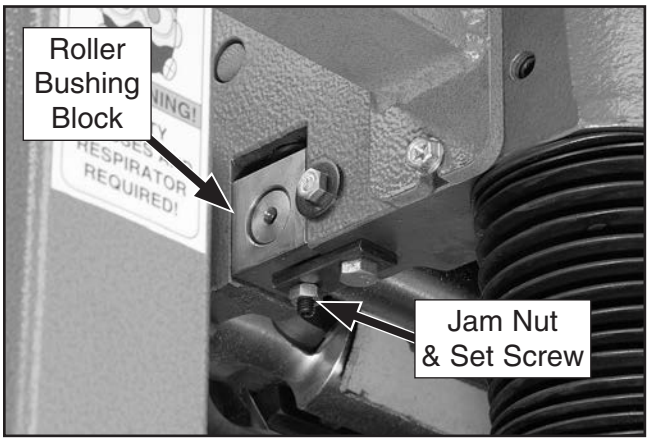

Figure 52. Location of infeed roller bushing block and height adjustment controls (left side shown).

9. Repeat **Steps 7–8** on left side of infeed roller.

10. Re-check both sides of infeed roller and, if necessary, make further adjustments until infeed roller height from side-to-side is 0.040" below BDC of cutterhead knife, then retighten both jam nuts.

11. Keeping same "0" reference on Rotacator dial from **Step 5**, repeat **Steps 7–10** for outfeed roller, but adjust it until it is 0.020" below BDC of cutterhead knife.

12. Using same "0" reference on Rotacator dial from **Step 5**, perform similar steps as described previously to adjust height of chip breaker to its recommended specification given at beginning of this subsection. The adjustment controls are shown below.

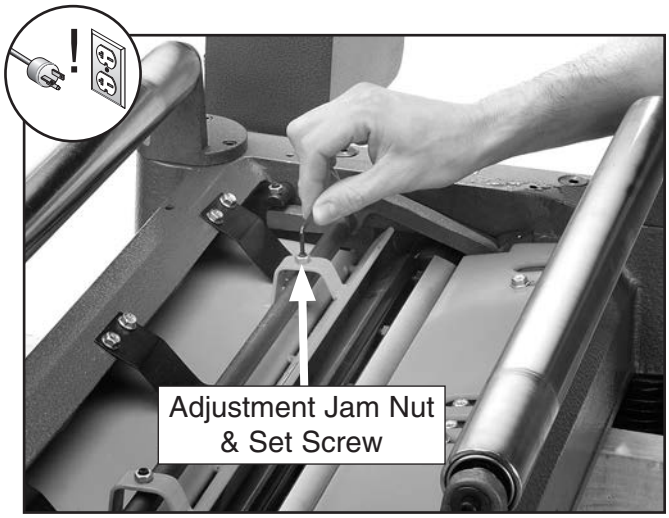

Figure 53. Adjusting chip breaker height.

13. Repeat **Step 12** for pressure bar height adjustment. The adjustment controls are shown below.

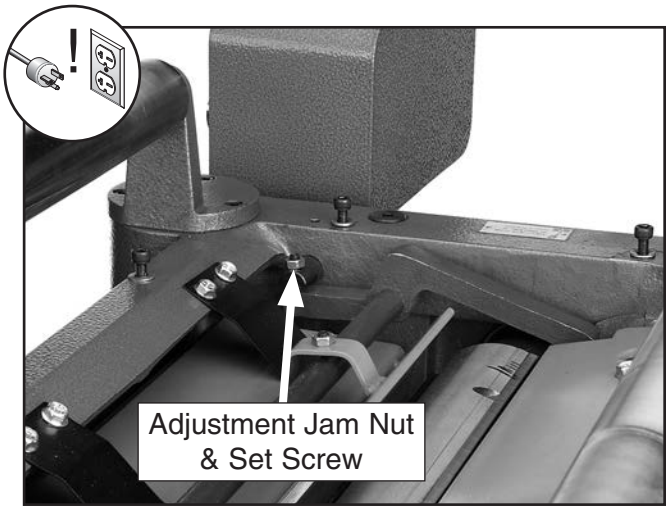

Figure 54. Location of pressure bar height adjustment jam nut and set screw.

14. Re-install belt cover, top cover, drive chain cover, and dust hood.

Using Wood Blocks

Items Needed	Qty
Phillips Screwdriver #2	1
Hex Wrench 3mm, 5mm	1
Wrench or Socket 10mm	1
2x4 6' Long	1
Feeler Gauge Set	1

To use wood blocks to check/adjust heights:

1. Build wood blocks by cutting a *straight* 6-foot-long 2x4 in half.

   Note: *Having the wood blocks at an even height is critical to the accuracy of your overall adjustments. For best results, make the 2x4 square with a jointer and table saw before cutting it in half.*

2. DISCONNECT MACHINE FROM POWER!

3. **G1033 & G1033Z Only:** Make sure knives are set to correct height (refer to **Adjusting/ Replacing Knives** on **Page 26** for detailed instructions).

4. Lower bed rollers below table surface (refer to **Bed Roller Height** on **Page 25** for detailed instructions).

5. Place wood blocks along sides of table, as illustrated in **Figure 55**.

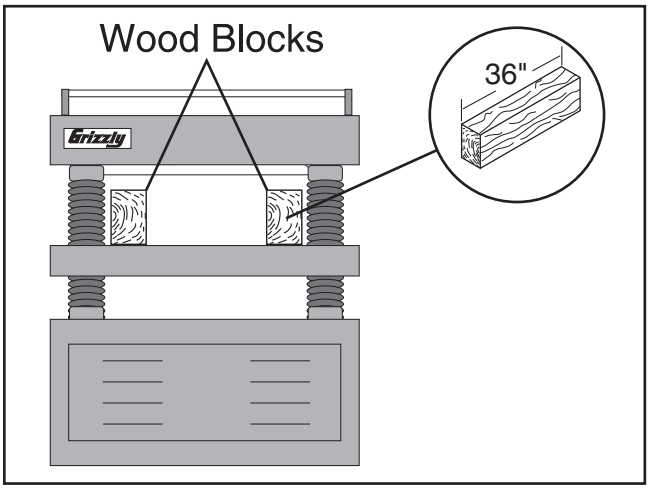

Figure 55. Wood blocks properly positioned on the planer table.

6. Remove dust hood, top cover, belt cover, and drive chain cover.

7. Raise table until wood blocks get close to cutterhead.

8. Use belt to rotate cutterhead and continue raising table until blocks just barely touch cutterhead knife/insert at its lowest point of rotation (BDC).

9. Lock table in place. Upward pressure of wood blocks will hold infeed and outfeed rollers, chip breaker, and pressure bar at same level as knife/insert at BDC.

10. Loosen jam nuts and set screws on each side of infeed roller (see **Figure 56**).

11. Using a feeler gauge, adjust set screw so it is 0.040" from roller bushing block (see **Figure 56**), then tighten jam nut. Repeat on other side of infeed roller.

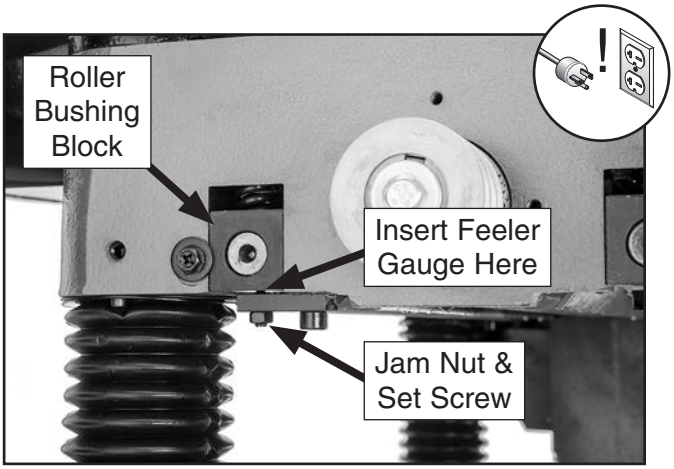

Figure 56. Example of feeler gauge location for adjusting infeed roller height when using wood blocks (one of two locations shown).

12. Repeat **Steps 10–11** with outfeed roller, only adjust the gaps to 0.020".

13. Loosen jam nuts and set screws on each side of chip breaker (see **Figure 57**).

14. Using a feeler gauge, adjust set screw so chip breaker is 0.040" from cross bar (see **Figure 57**), then tighten jam nut. Repeat on other side of chip breaker.

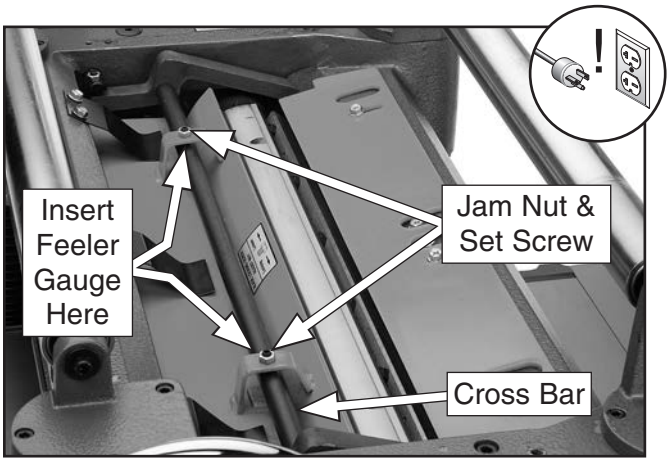

Figure 57. Feeler gauge locations for adjusting chip breaker height when using wood blocks.

15. Re-install belt cover, top cover, drive chain cover, and dust hood.

Adjusting Feed-Roller Spring Tension

The infeed and outfeed rollers keep the workpiece moving through the planer. Springs exert downward pressure on the feed rollers while allowing them to raise with an uneven workpiece surface. Proper spring tension is crucial to keep the workpiece moving through the planer during operation.

The ideal feed-roller spring tension varies depending upon the type of wood you plane. When adjusting spring tension, keep the following in mind:

- If you are planing milled lumber with a consistent surface, use less spring tension to reduce the risk of marring the workpiece.
- If you are planing rough lumber with inconsistent surfaces, use greater spring tension to keep the stock moving through the planer.
- If the workpiece consistently stops feeding during operation, the spring tension may need to be increased.

Items Needed **Qty**
Hex Wrench 5mm..... 1

To adjust feed-roller spring tension:

1. DISCONNECT MACHINE FROM POWER!
2. Rotate tension screws (shown below) clockwise to increase tension or counterclockwise to decrease tension.

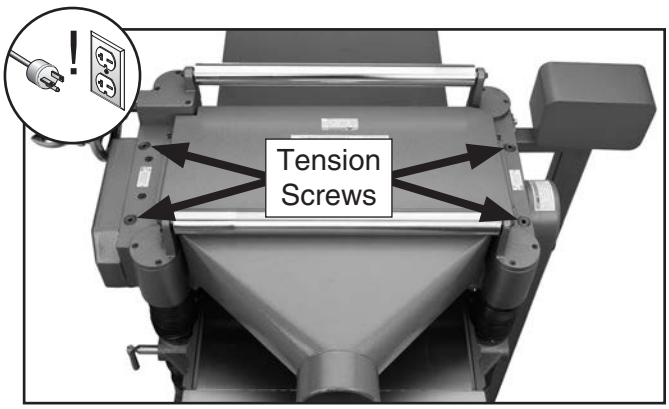

Figure 58. Example of feed-roller spring tension adjustment screws.

Positioning Chip Deflector

Chip Deflector Gap Setting
If Planer Used w/Dust Collector ..... ¼"
If Planer Used w/o Dust Collector ..... 1/16"

When properly distanced from the cutterhead, the chip deflector directs the chips into the dust hood, and keeps them from falling onto the outfeed roller and being pressed into the workpiece.

Items Needed: **Qty**
Wrench or Socket 10mm..... 1
Hex Wrench 5mm..... 1

To adjust chip deflector gap:

1. DISCONNECT MACHINE FROM POWER!
2. Remove dust hood, top cover, and belt cover.
3. Use cutterhead pulley to rotate cutterhead until a knife/insert reaches closest distance to chip deflector (see **Figure** below), then measure distance between knife/insert and chip deflector.

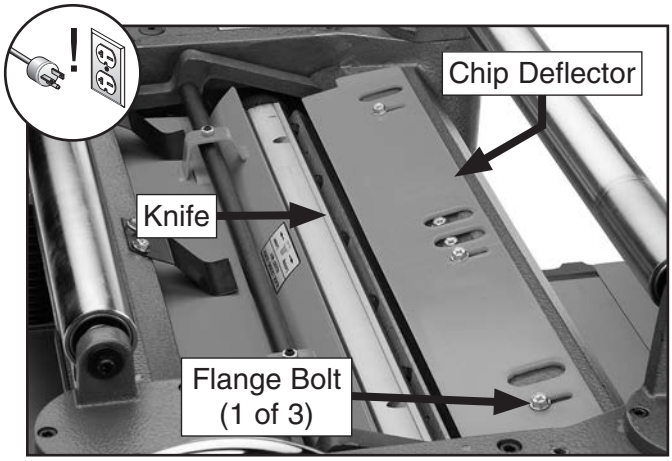

Figure 59. Location of chip deflector and mounting hardware.

4. If distance measured in **Step 3** is *not* equal to correct chip deflector gap setting, then loosen (3) flange bolts that secure chip deflector and adjust gap to correct setting.
5. Re-tighten flange bolts, then replace belt cover, top cover, and dust hood.

Calibrating Table Height Scale

Although correctly set at the factory, the table height scale can be adjusted for accuracy if it becomes necessary.

Items Needed	Qty
Phillips Screwdriver #2	1
Scrap Piece of Stock	1
Calipers	1

To calibrate scale:

1. Plane a scrap piece of stock until it is flat and of even thickness along its length.

   Note: *Turn board over between each pass.*

2. Use calipers to measure board thickness.

3. If there is a discrepancy between board thickness and reading on table height scale, loosen the screws shown in **Figure 60**, adjust scale as necessary to match measurement, then re-tighten screws.

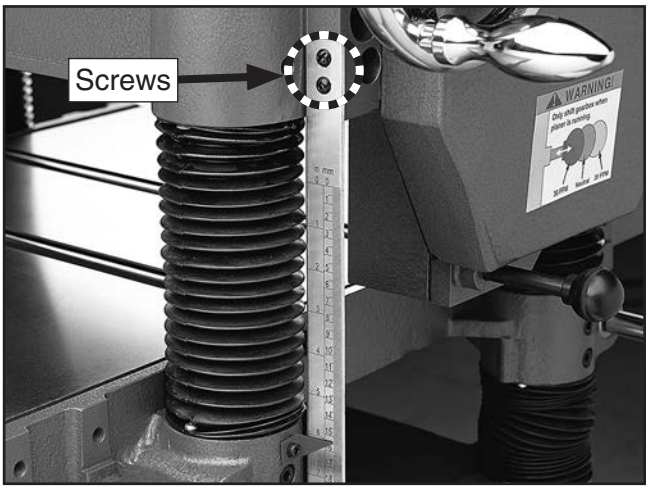

Figure 60. Location of adjustment screws for table height scale.

Checking Anti-Kickback Fingers

The anti-kickback fingers are an important safety feature of your planer. The fingers hang from a rod suspended across the head casting and in front of the infeed roller, as shown. This design allows the workpiece to easily enter the planer but reduces the risk of kickback by digging into the workpiece if it moves backward.

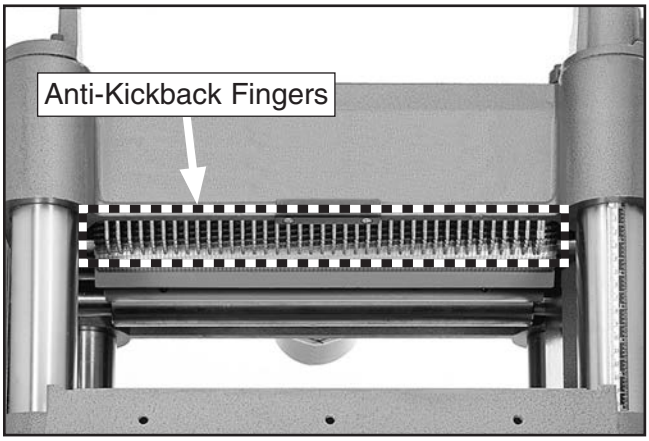

Figure 61. Example of anti-kickback fingers.

Check the anti-kickback fingers regularly to ensure they swing freely and easily. If the fingers do not swing freely and easily, first clean them with a wood-resin solvent, then inspect them for damage. If any of the fingers are damaged, the device must be replaced before using the machine.

Do not apply oil or other lubricants to the anti-kickback fingers that will attract dust and restrict free movement of the fingers.

⚠WARNING

Proper operation of anti-kickback fingers is critical for safe operation of this planer. DO NOT operate planer if anti-kickback fingers are not operating correctly. Failure to heed this warning could result in serious personal injury.

Checking Pulley Alignment

Proper pulley alignment prevents premature V-belt wear and unnecessary load on the motor. The pulleys are properly aligned when they are parallel and in the same plane as each other.

Items Needed	**Qty**
Straightedge 3'	1
Wrench or Socket 14mm, 17mm	2 Ea.

To check/re-align pulleys:

1. DISCONNECT MACHINE FROM POWER!

2. Remove belt cover, then use straightedge to check pulley alignment, as shown in **Figure 62**.

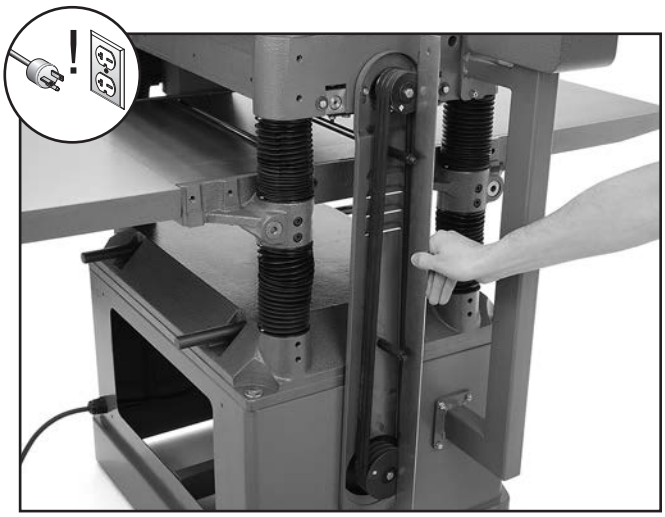

Figure 62. Checking pulley alignment.

— If pulleys are parallel and in the same plane, no adjustment is necessary. Re-install belt cover.

— If pulleys are not parallel or in the same plane, remove motor access panel, then proceed to **Step 3**.

3. Loosen (4) motor mount bolts, shift motor until pulleys are aligned, then re-tighten bolts.

4. Re-check pulleys and repeat **Step 3** as necessary until you are satisfied with pulley alignment, then re-tighten all fasteners, and replace belt cover and motor access panel.

Tensioning Table Height Chain

The table height chain is located under the table. It transfers movement from the handwheel to the columns that control table height. The chain drive can be adjusted to remove slack if the chain stretches over time or is loosened during table leveling procedures.

Items Needed	**Qty**
Phillips Screwdriver #2	1
Wrench or Socket 14mm	1

To tension table height chain:

1. DISCONNECT MACHINE FROM POWER!

2. Remove motor access panel to access table height chain (see **Figure 63**).

3. Loosen both chain-tension lock bolts (see **Figure 63**), then push idler sprocket against chain with moderate pressure to eliminate slack in chain. While maintaining pressure on idler sprocket, re-tighten lock bolts.

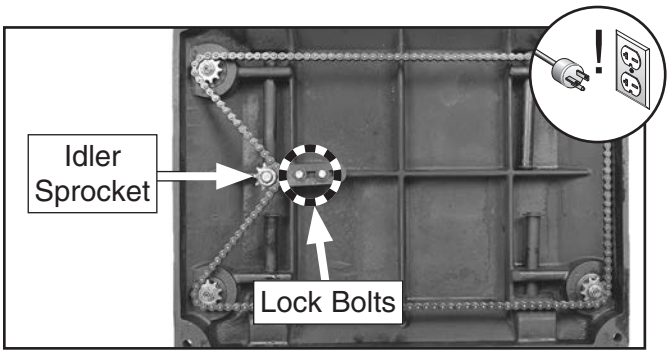

Figure 63. Table height chain on underside of table (stand removed for clarity).

4. Clean and lubricate chain and sprockets (refer to **Table Height Chain & Sprockets** on **Page 33** for detailed instructions), then re-install motor access panel.

NOTICE

DO NOT let chain fall off sprockets. It can be very difficult to return chain to its proper location on sprockets without changing table adjustments.

Adjusting Table Parallelism

Maximum Allowable Tolerances:
Cutterhead/Table Side-to-Side ..... 0.002"
Head Casting/Table Front/Back ..... 0.020"

Tools Needed:	**Qty**
Rotacator	1
Phillips Screwdriver #2	1
Wrench or Socket 14mm	1
Hex Wrench 6mm	1

Table parallelism is critical to the operation of the machine. As such, it is essential that the table is adjusted parallel with the cutterhead (within 0.002") from side-to-side, as illustrated in **Figure 64**.

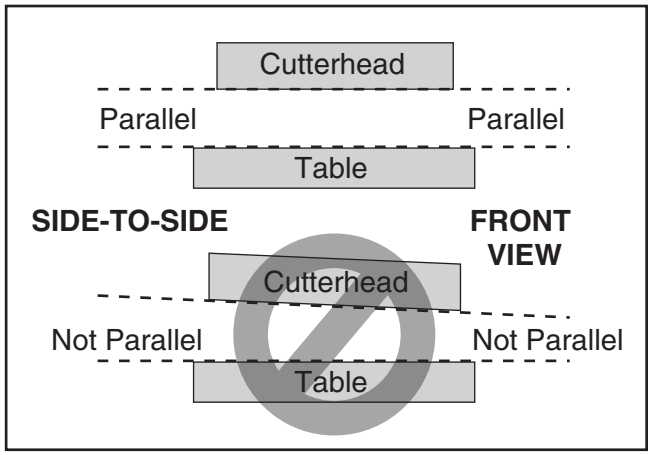

Figure 64. Side-to-side parallelism of table and cutterhead.

How the table sits in relation to the head casting from front-to-back is also important (see **Figure 65**). Because the feed rollers, pressure bar, and chip breaker are adjusted off the table position, the tolerances on the front-to-back positioning are not as critical as the cutterhead/table side-to-side positioning. Therefore, the maximum allowable tolerance for the front-to-back parallelism is within 0.020".

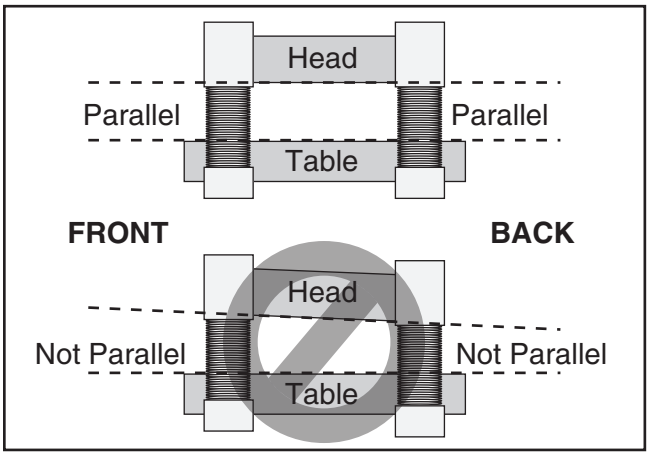

Figure 65. Front-to-back parallelism of table and cutterhead.

Table Parallelism Inspection

The easiest way to determine if your head casting has a parallelism problem is to plane a workpiece and measure the thickness in multiple locations. If the workpiece is tapered from left-to-right or from front-to-back, then parallelism may be a problem.

Use your Rotacator to further inspect the table parallelism. If you do not have a Rotacator, a wood block and feeler gauges may be used, but extra care must be taken to ensure accuracy. If the table is not within the maximum allowable tolerances, it must be adjusted.

Table Parallelism Adjustments

The table is adjusted by turning the chain sprockets underneath the table for movements over 0.016" or by adjusting how the table is mounted on the columns for movements under 0.016".

NOTICE

When making adjustments, tighten fasteners after each step to ensure the accuracy of your tests. When adjusting the chain sprockets, keep in mind that if the chain becomes too loose, it will fall off of all the sprockets, and returning it to its proper location can be extremely difficult.

To adjust table parallelism:

1. DISCONNECT MACHINE FROM POWER!

2. Remove motor access panel and locate chain on underside of table.

3. Loosen lock bolts and idler sprocket (see **Tensioning Table Height Chain** instructions on **Page 45**).

4. Move chain away from sprocket you want to adjust so only that sprocket can be rotated independent of chain.

   Note: *If the left side of the table is too high, the left two sprockets will need to be adjusted. Each tooth on the sprocket represents 0.016" of vertical movement as the cogs are turned. Make sure, as you turn the sprockets, to keep an accurate tooth count to ensure that the table is adjusted equally.*

5. Mark location of one tooth of sprocket that you are adjusting.

6. Carefully rotate sprocket (clockwise to lower table; counterclockwise to raise table) just enough to position next tooth at marked location, then fit chain around sprocket again.

7. Repeat **Steps 4–6** with each sprocket that needs to be adjusted until table-to-cutterhead clearance is within 0.016" from one side to the other.

8. Make sure chain is properly fitted on sprockets, then re-tighten idler sprocket and lock bolts.

9. If necessary, micro-adjust table position by loosening cap screws shown in **Figure 66** and raising or lowering table until it is properly aligned with cutterhead.

   Note: *This process may require adjusting the columns on both the left and right hand sides until you find the correct combination.*

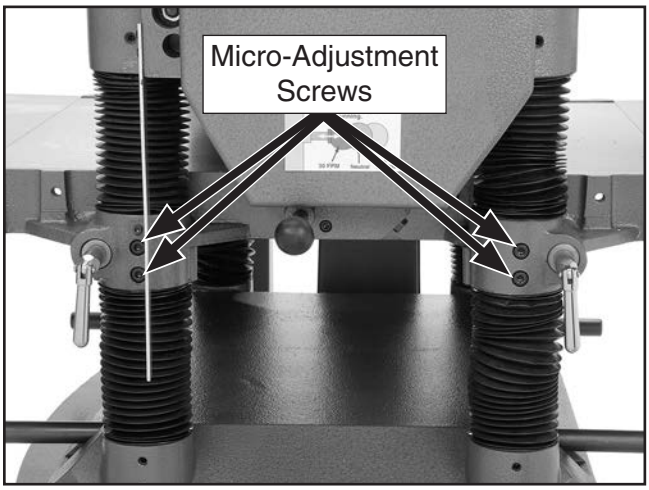

Figure 66. Location of table micro-adjustment screws (only one side shown).

SECTION 8: WIRING

These pages are current at the time of printing. However, in the spirit of improvement, we may make changes to the electrical systems of future machines. Compare the manufacture date of your machine to the one stated in this manual, and study this section carefully.

If there are differences between your machine and what is shown in this section, call Technical Support at (570) 546-9663 for assistance BEFORE making any changes to the wiring on your machine. An updated wiring diagram may be available. **Note:** *Please gather the serial number and manufacture date of your machine before calling. This information can be found on the main machine label.*

⚠WARNING
Wiring Safety Instructions

SHOCK HAZARD. Working on wiring that is connected to a power source is extremely dangerous. Touching electrified parts will result in personal injury including but not limited to severe burns, electrocution, or death. Disconnect the power from the machine before servicing electrical components!

MODIFICATIONS. Modifying the wiring beyond what is shown in the diagram may lead to unpredictable results, including serious injury or fire. This includes the installation of unapproved aftermarket parts.

WIRE CONNECTIONS. All connections must be tight to prevent wires from loosening during machine operation. Double-check all wires disconnected or connected during any wiring task to ensure tight connections.

CIRCUIT REQUIREMENTS. You MUST follow the requirements at the beginning of this manual when connecting your machine to a power source.

WIRE/COMPONENT DAMAGE. Damaged wires or components increase the risk of serious personal injury, fire, or machine damage. If you notice that any wires or components are damaged while performing a wiring task, replace those wires or components.

MOTOR WIRING. The motor wiring shown in these diagrams is current at the time of printing but may not match your machine. If you find this to be the case, use the wiring diagram inside the motor junction box.

CAPACITORS/INVERTERS. Some capacitors and power inverters store an electrical charge for up to 10 minutes after being disconnected from the power source. To reduce the risk of being shocked, wait at least this long before working on capacitors.

EXPERIENCING DIFFICULTIES. If you are experiencing difficulties understanding the information included in this section, contact our Technical Support at (570) 546-9663.

NOTICE

The photos and diagrams included in this section are best viewed in color. You can view these pages in color at www.grizzly.com.

COLOR KEY

BLACK	Bk	BLUE	Bl	YELLOW	Yl	LIGHT BLUE	Lb
WHITE	Wt	BROWN	Br	YELLOW GREEN	Yg	BLUE WHITE	Bw
GREEN	Gn	GRAY	Gy	PURPLE	Pu	TUR-QUOISE	Tu
RED	Rd	ORANGE	Or	PINK	Pk		

G1033 Wiring Diagram

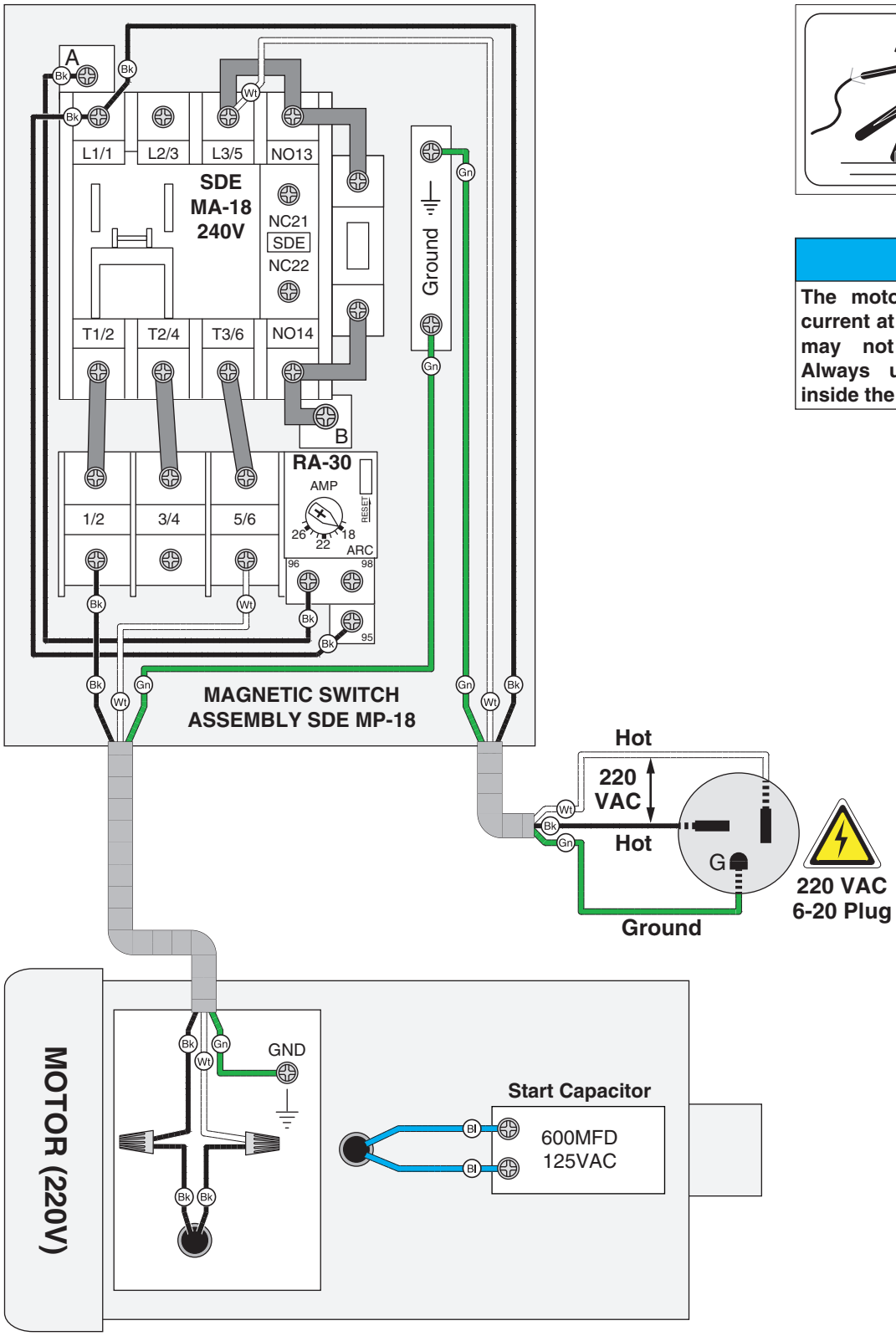

NOTICE

The motor wiring shown here is current at the time of printing, but it may not match your machine. Always use the wiring diagram inside the motor junction box.

G1033 Electrical Components

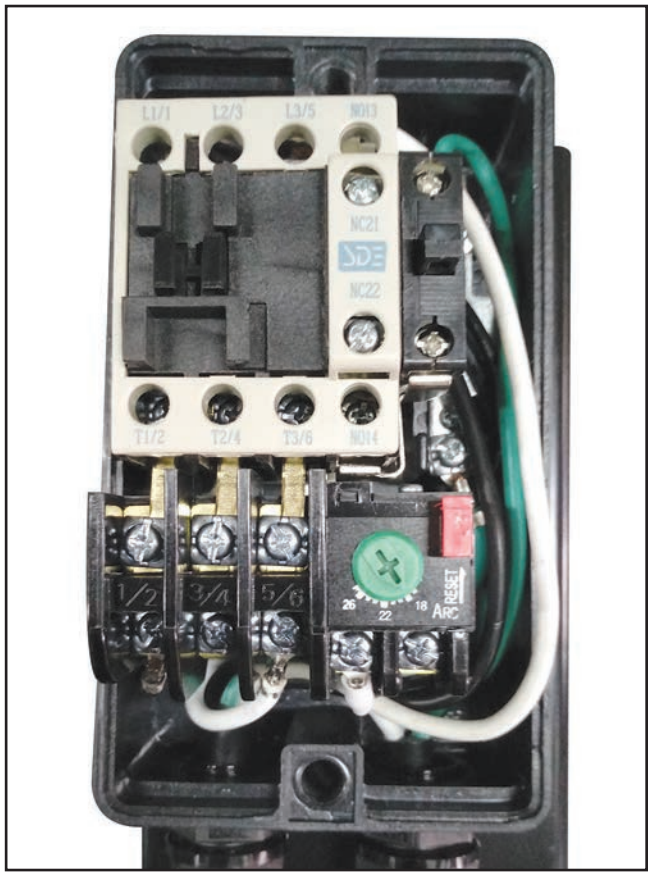

Figure 67. G1033 magnetic switch with cover removed.

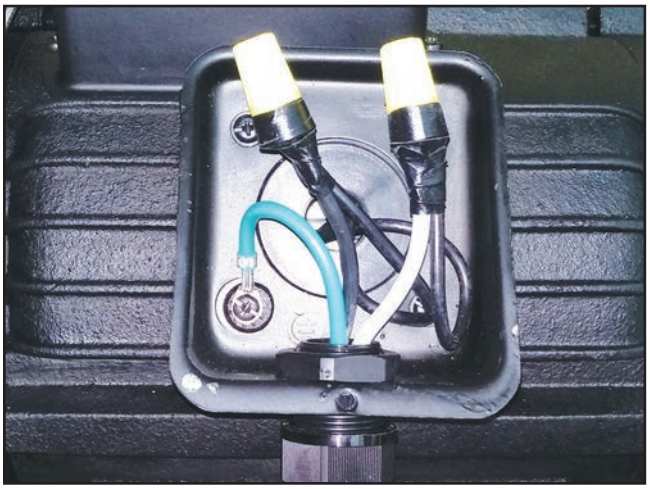

Figure 68. G1033 motor junction box.

Figure 69. G1033 start capacitor.

STOP *READ ELECTRICAL SAFETY ON PAGE 48!*

G1033X Wiring Diagram

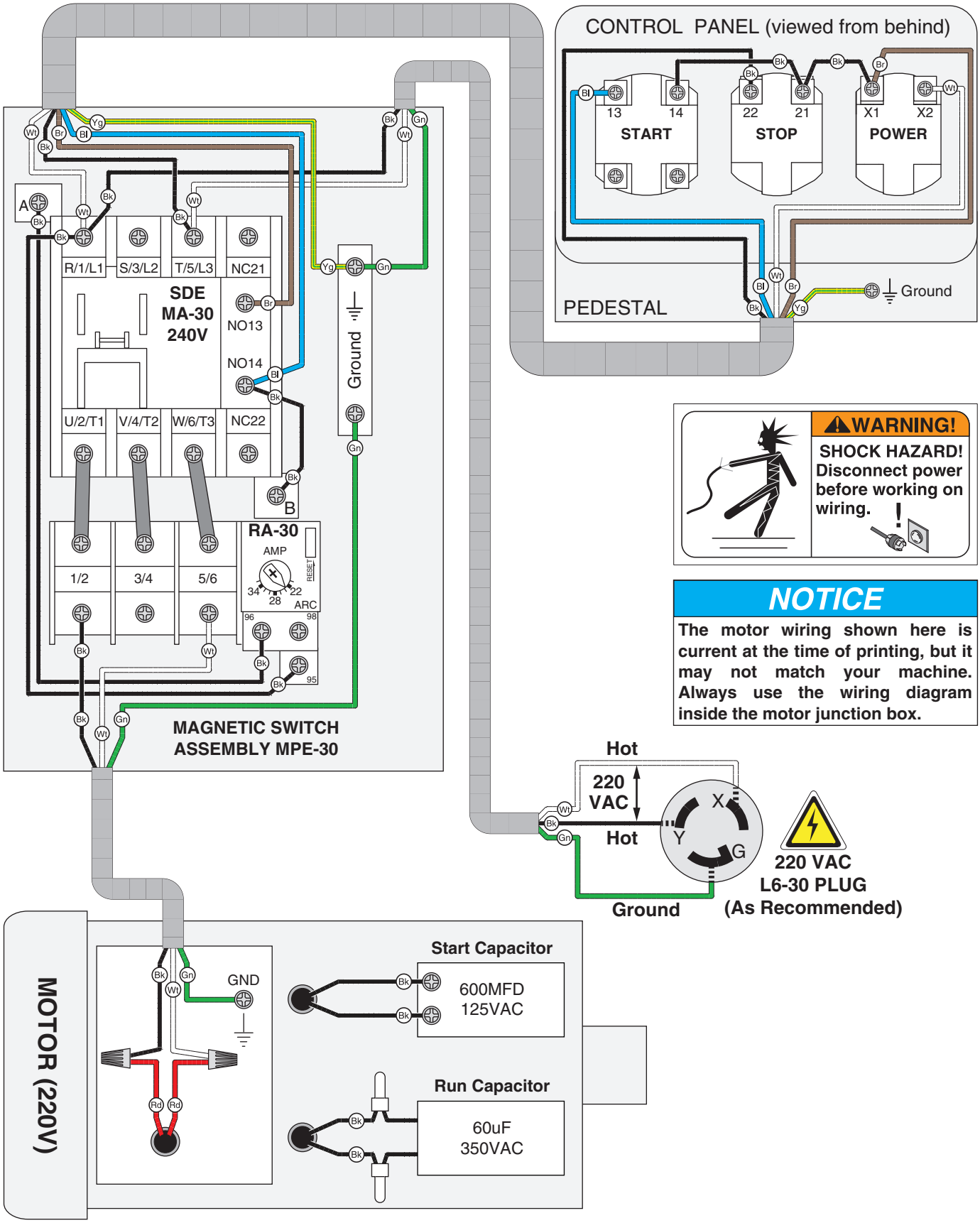

WARNING!

SHOCK HAZARD! Disconnect power before working on wiring.

NOTICE

The motor wiring shown here is current at the time of printing, but it may not match your machine. Always use the wiring diagram inside the motor junction box.

G1033X Electrical Components

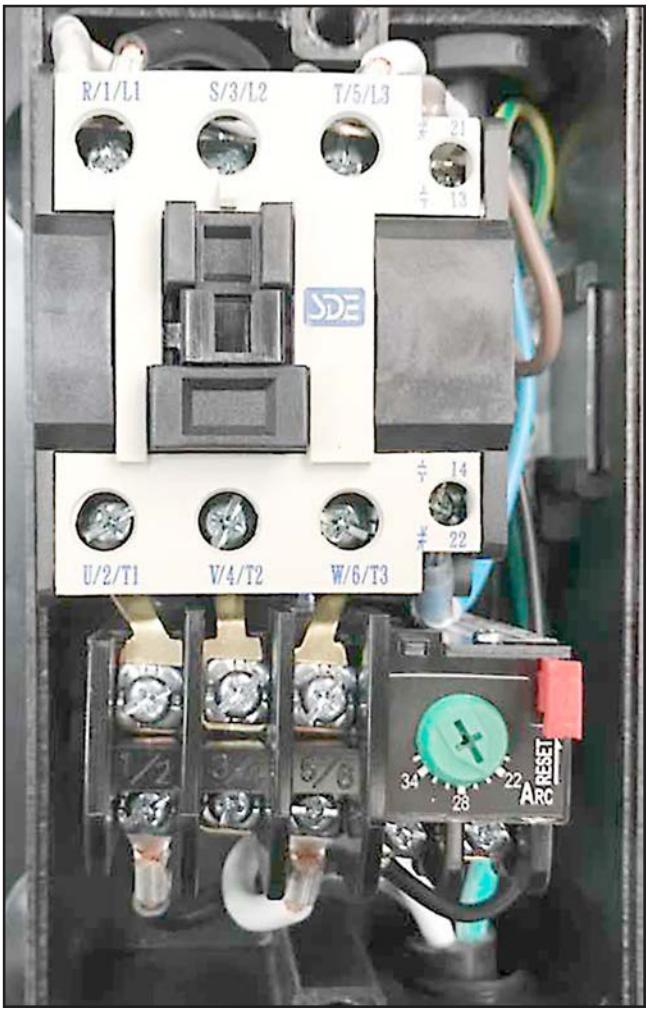

Figure 70. G1033X magnetic switch with cover removed.

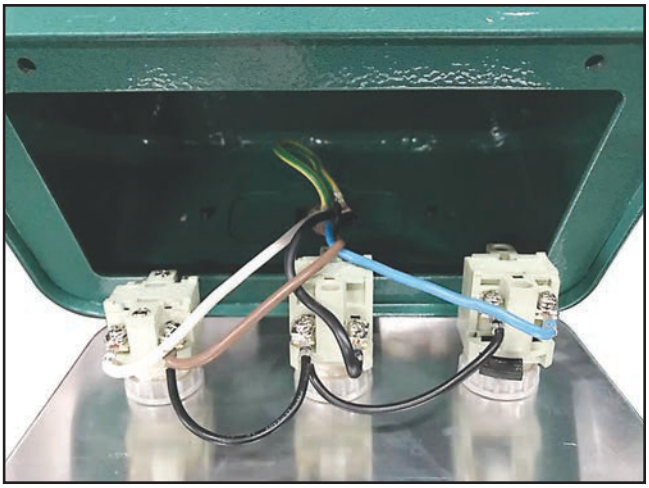

Figure 71. G1033X control panel wiring.

Figure 72. G1033X capacitors.

Figure 73. G1033X motor junction box.

READ ELECTRICAL SAFETY ON PAGE 48!

G1033Z Wiring Diagram

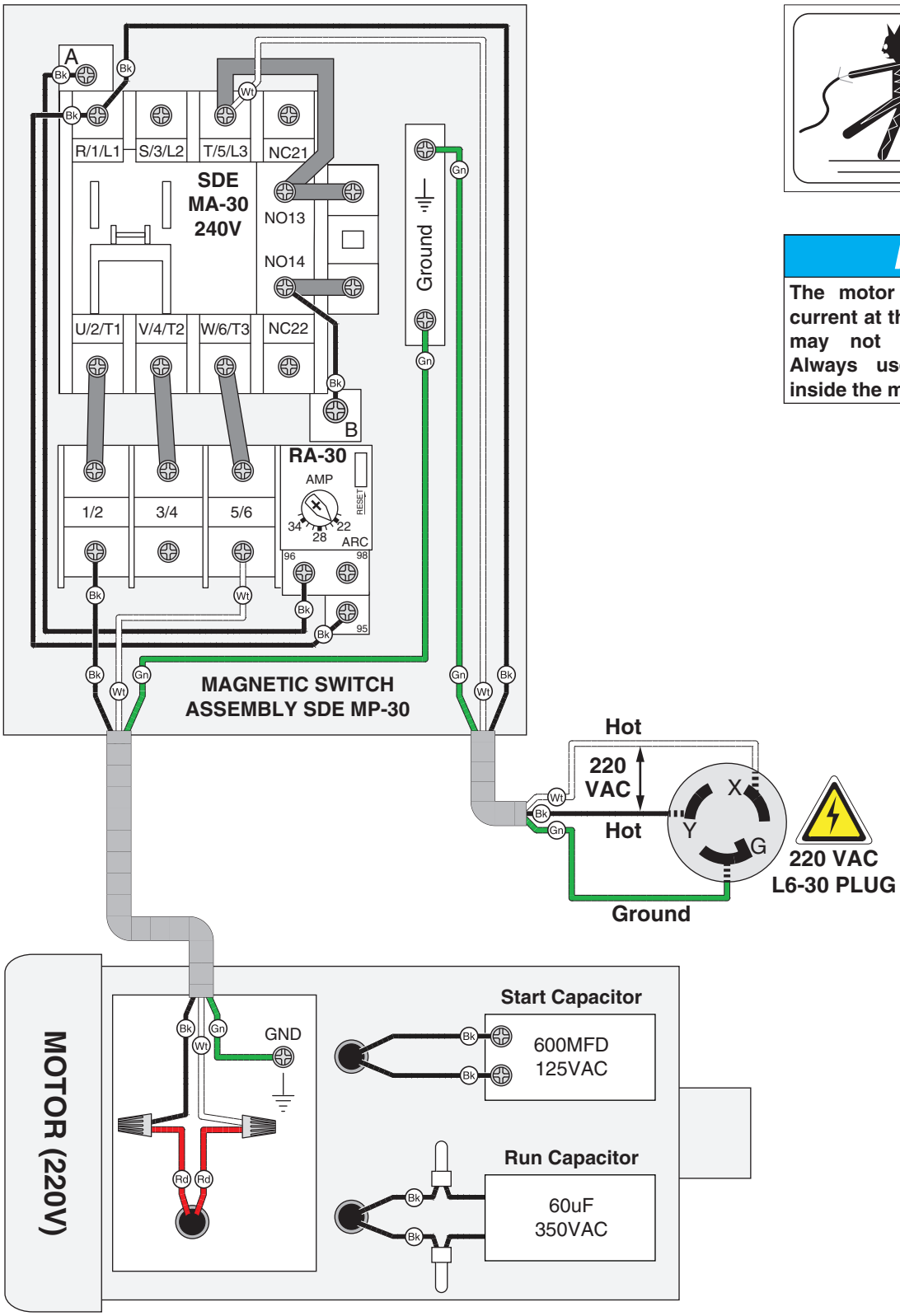

NOTICE

The motor wiring shown here is current at the time of printing, but it may not match your machine. Always use the wiring diagram inside the motor junction box.

G1033Z Electrical Components

Figure 74. G1033Z magnetic switch with cover removed.

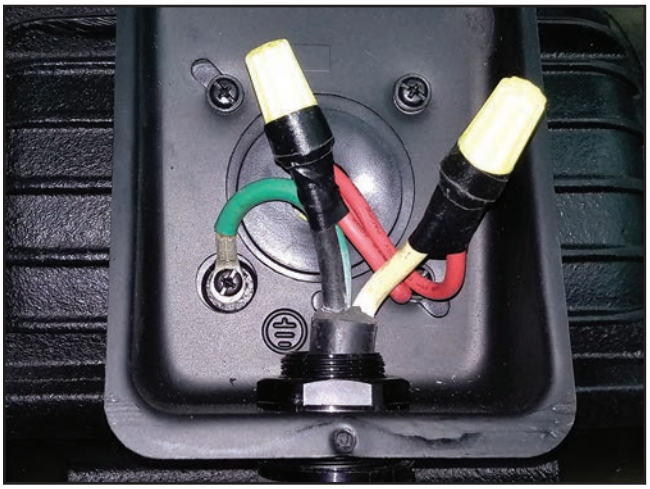

Figure 75. G1033Z motor junction box.

Figure 76. G1033Z capacitors.

STOP *READ ELECTRICAL SAFETY ON PAGE 48!*

SECTION 9: PARTS

We do our best to stock replacement parts when possible, but we cannot guarantee that all parts shown are available for purchase. Call **(800) 523-4777** or visit **www.grizzly.com/parts** to check for availability.

G1033/G1033Z Main

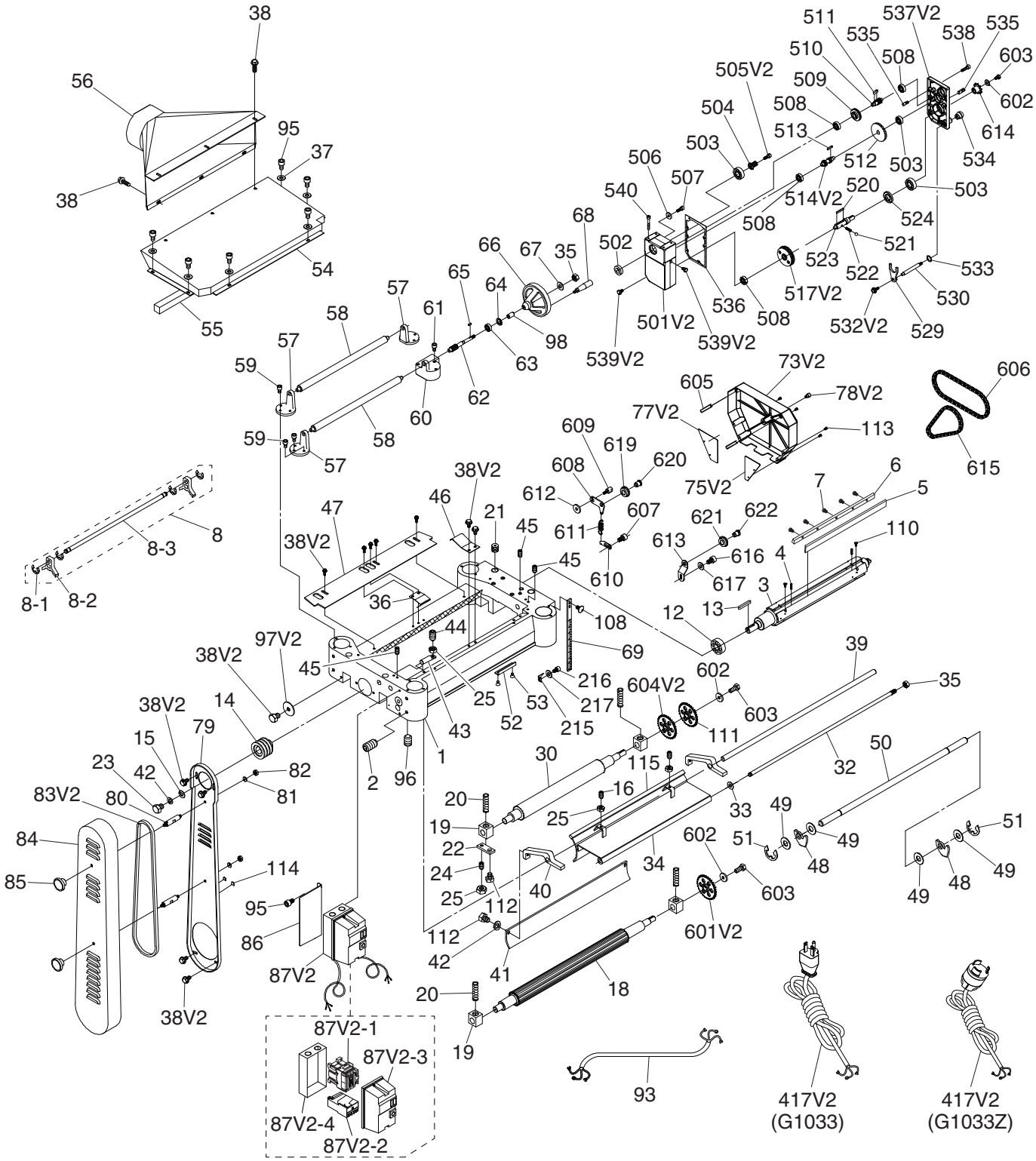

BUY PARTS ONLINE AT GRIZZLY.COM!
Scan QR code to visit our Parts Store.

G1033/G1033Z Main Parts List

REF	PART #	DESCRIPTION
1	P1033001	HEADSTOCK CASTING
2	P1033002	SET SCREW M10-1.5 X 12
3	P1033003	CUTTERHEAD 20" 4-KNIFE
4	P1033004	COMPRESSION SPRING 0.6 X 5.9 X 16
5	P1033005	20" PLANER KNIVES-SET OF 4
6	P1033006	CUTTERHEAD GIB
7	P1033007	HEX BOLT M8-1.25 X 10
8	P1033008	KNIFE-SETTING JIG ASSEMBLY
8-1	P1033008-1	E-CLIP 9MM
8-2	P1033008-2	KNIFE-SETTING JIG FOOT
8-3	P1033008-3	KNIFE-SETTING JIG SHAFT
12	P1033012	BALL BEARING 6206-2RS
13	P1033013	KEY 8 X 8 X 36
14	P1033014	CUTTERHEAD PULLEY
15	P1033015	FENDER WASHER 8 X 30 X 4MM
16	P1033016	SET SCREW M6-1 X 12
18	P1033018	INFEED ROLLER
19	P1033019	BUSHING BLOCK
20	P1033020	COMPRESSION SPRING 3.5 X 19.7 X 70
21	P1033021	TENSIONING SET SCREW M22-1.5 X 20
22	P1033022	BUSHING BLOCK PLATE
23	P1033023	HEX BOLT M8-1.25 X 30
24	P1033024	SET SCREW M6-1 X 16
25	P1033025	HEX NUT M6-1 THIN
30	P1033030	OUTFEED ROLLER
32	P1033032	CHIP BREAKER PIVOT ROD M12-1.75 X 25
33	P1033033	EXT RETAINING RING 12MM
34	P1033034	CHIP BREAKER
35	P1033035	HEX NUT M12-1.75
36	P1033036	V-ANGLED SPRING 70 X 46 X 0.6MM
37	P1033037	FLAT WASHER 6MM
38	P1033038	HEX BOLT M6-1 X 12
38V2	P1033038V2	FLANGE BOLT M6-1 X 12 V2.05.18
39	P1033039	CHIPBREAKER ADJUSTMENT ROD
40	P1033040	CHIPBREAKER ADJUSTMENT BRACKET
41	P1033041	PRESSURE BAR
42	P1033042	LOCK WASHER 8MM
43	P1033043	SHAFT
44	P1033044	SET SCREW M6-1 X 20
45	P1033045	SET SCREW M6-1 X 16
46	P1033046	FLAT SPRING 84 X 46 X 0.6MM
47	P1033047	CHIP DEFLECTOR
48	P1033048	ANTI-KICKBACK FINGER
49	P1033049	SPACER
50	P1033050	ANTI-KICKBACK SHAFT
51	P1033051	E-CLIP 15MM
52	P1033052	DEPTH LIMITER
53	P1033053	FLAT HD SCR M5-.8 X 12
54	P1033054	UPPER COVER
55	P1033055	UPPER COVER GASKET

REF	PART #	DESCRIPTION
56	P1033056	DUST PORT 5"
57	P1033057	RETURN ROLLER BRACKET
58	P1033058	RETURN ROLLER
59	P1033059	CAP SCREW M6-1 X 16
60	P1033060	WORM GEAR HOUSING
61	P1033061	CAP SCREW M6-1 X 50
62	P1033062	WORM SHAFT
63	P1033063	BALL BEARING 6201-2RS
64	P1033064	INT RETAINING RING 32MM
65	P1033065	KEY 4 X 4 X 10
66	P1033066	HANDWHEEL TYPE-2 200D X 12B-K X 3/8-16
67	P1033067	FLAT WASHER 12MM
68	P1033068	REVOLVING HANDLE 1 X 3-9/16, 3/8-16 X 1/2
69	P1033069	SCALE
73V2	P1033073V2	DRIVE CHAIN COVER V2.05.18
75V2	P1033075V2	GEARBOX COVER PLATE-A V2.05.18
77V2	P1033077V2	GEARBOX COVER PLATE-B V2.05.18
78V2	P1033078V2	CAP SCREW M8-1.25 X 10 V2.05.18
79	P1033079	PULLEY GUARD
80	P1033080	STANDOFF-HEX DE
81	P1033081	FLAT WASHER 5/16
82	P1033082	HEX NUT 5/16-18
83V2	P1033083V2	V-BELT M58 3L580 V2.05.18
84	P1033084	PULLEY COVER
85	P1033085	KNOB 5/16-18, D1-3/4, ROUND
86	P1033086	SWITCH BRACKET (G1033)
86	P1033Z086	SWITCH BRACKET (G1033Z)
87V2	P1033087V2	MAGNETIC SWITCH ASSY SDE MP-18 V2.05.18
87V2	P1033Z087V2	MAGNETIC SWITCH ASSY SDE MP-30 V2.05.18
87V2-1	P1033087V2-1	CONTACTOR SDE MA-18 220-240V (G1033)
87V2-1	P1033Z087V2-1	CONTACTOR SDE MA-30 220-240V (G1033Z)
87V2-2	P1033087V2-2	OL RELAY SDE RA-30 18-26A (G1033)
87V2-2	P1033Z087V2-2	OL RELAY SDE RA-30 22-34A (G1033Z)
87V2-3	P1033087V2-3	MAGNETIC SWITCH COVER (FRONT) (G1033)
87V2-3	P1033Z087V2-3	MAGNETIC SWITCH COVER (FRONT) (G1033Z)
87V2-4	P1033087V2-4	MAGNETIC SWITCH COVER (REAR) (G1033)
87V2-4	P1033Z087V2-4	MAGNETIC SWITCH COVER (REAR) (G1033Z)
93	P1033093	MOTOR CORD 12G 3W 57" (G1033)
93	P1033Z093	MOTOR CORD 10G 3W 57" (G1033Z)
95	P1033095	CAP SCREW M6-1 X 12
96	P1033096	SET SCREW M8-1.25 X 12
97V2	P1033097V2	FENDER WASHER 6 X 22 X 3MM V2.05.18
98	P1033098	SLEEVE 13.5 ID X 30 L
108	P1033108	PHLP HD SCR M6-1 X 12
110	P1033110	FLAT HD CAP SCR M5-.8 X 10
111	P1033111	SPROCKET 31T
112	P1033112	HEX BOLT M8-1.25 X 20
113	P1033113	PHLP HD SCR M4-.7 X 8
114	P1033114	PULLEY GUARD PLATE
115	P1033115	CHIP BREAKER GASKET

BUY PARTS ONLINE AT GRIZZLY.COM!
Scan QR code to visit our Parts Store.

G1033/G1033Z Main Parts List (Cont.)

REF	PART #	DESCRIPTION
215	P1033215	POINTER
216	P1033216	CAP SCREW M5-.8 X 10
217	P1033217	LOCK WASHER 5MM
417V2	P1033417V2	POWER CORD 12G 3W 138" 6-20P V2.05.18
417V2	P1033Z417V2	POWER CORD 12G 3W 138" L6-30P V2.05.18
501V2	P1033501V2	GEARBOX V2.05.18
502	P1033502	OIL SEAL 28 X 40 X 8
503	P1033503	BALL BEARING 6204ZZ
504	P1033504	GEAR 16T
505V2	P1033505V2	CAP SCREW M6-1 X 25 V2.05.18
506	P1033506	FLAT WASHER 6 X 20 X 3MM
507	P1033507	CAP SCREW M6-1 X 12
508	P1033508	BALL BEARING 6201ZZ
509	P1033509	GEAR 47T
510	P1033510	GEARED SHAFT 18T
511	P1033511	KEY 5 X 5 X 12
512	P1033512	GEAR 71T
513	P1033513	KEY 5 X 5 X 10
514	P1033514	GEARED SHAFT 22T/18T
517	P1033517	COMBO GEAR 92T/96T
520	P1033520	KEY 6 X 6 X 40
521	P1033521	STEEL BALL 6MM
522	P1033522	COMPRESSION SPRING 0.6 X 5.9 X 16
523	P1033523	GEAR SHAFT
524	P1033524	OIL SEAL 25 X 47 X 6
529	P1033529	SHIFTING FORK
530	P1033530	SHIFTING SHAFT
532V2	P1033532V2	FLANGE BOLT M6-1 X 12 V2.05.18
533	P1033533	O-RING 12 X 1.5 S12.5

REF	PART #	DESCRIPTION
534	P1033534	KNOB 3/8-16, D1-1/4, BALL
535	P1033535	LOCATING PIN 8 X 7.55 X 7.95
536	P1033536	GEARBOX COVER GASKET
537V2	P1033537V2	GEARBOX COVER V2.05.18
538	P1033538	CAP SCREW M6-1 X 25
539V2	P1033539V2	OIL PLUG 1/4 NPT X 3/4" V2.05.18
540	P1033540	CAP SCREW M8-1.25 X 50
601V2	P1033601V2	SPROCKET 31T V2.05.18
602	P1033602	FENDER WASHER 6 X 20 X 3MM
603	P1033603	HEX BOLT M6-1 X 16
604V2	P1033604V2	SPROCKET 31T V2.05.18
605	P1033605	ROLL PIN 6 X 20
606	P1033606	CHAIN 06B-1 X 67 33 LINKS
607	P1033607	CAP SCREW M6-1 X 10
608	P1033608	CHAIN TENSIONER
609	P1033609	SHOULDER BOLT M8-1.25 X 14, 12 X 4
610	P1033610	SPRING BRACKET
611	P1033611	EXTENSION SPRING 1 X 8.5 X 33
612	P1033612	SPACER 8.2 X 22 X 3MM
613	P1033613	OUTER CHAIN TENSIONER
614	P1033614	SPROCKET 12T W/KEY
615	P1033615	CHAIN 06B-1 25 LINKS
616	P1033616	CAP SCREW M6-1 X 35
617	P1033617	FLAT WASHER 6MM
619	P1033619	CHAIN TENSIONER IDLER WHEEL
620	P1033620	CHAIN TENSIONER IDLER SHAFT
621	P1033621	OUTER CHAIN TENSIONER IDLER WHEEL
622	P1033622	OUTER CHAIN TENSIONER IDLER SHAFT

BUY PARTS ONLINE AT GRIZZLY.COM!
Scan QR code to visit our Parts Store.

G1033/G1033Z Stand & Motor

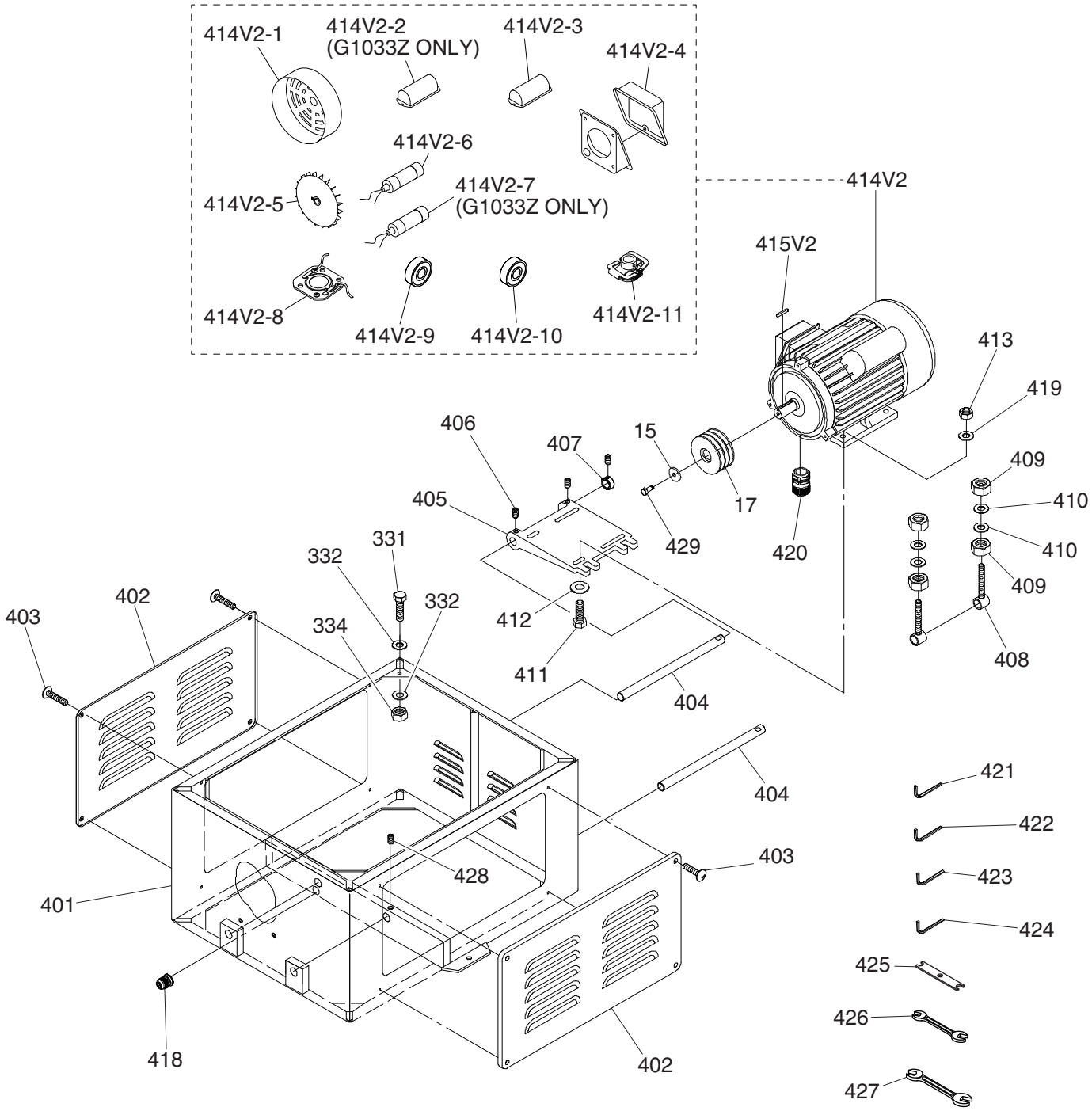

BUY PARTS ONLINE AT GRIZZLY.COM!
Scan QR code to visit our Parts Store.

G1033/G1033Z Stand & Motor Parts List

REF	PART #	DESCRIPTION
15	P1033015	FENDER WASHER 8 X 30 X 4MM
17	P1033017	MOTOR PULLEY (G1033)
17	P1033Z017	MOTOR PULLEY (G1033Z)
331	P1033331	HEX BOLT M12-1.75 X 50
332	P1033332	FLAT WASHER 12MM
334	P1033334	HEX NUT M12-1.75
401	P1033401	STAND
402	P1033402	MOTOR ACCESS PANEL
403	P1033403	FLAT HD SCR M6-1 X 20
404	P1033404	PLATE CONNECTING ROD
405	P1033405	MOTOR MOUNT PLATE (G1033)
405	P1033Z405	MOTOR MOUNT PLATE (G1033Z)
406	P1033406	SET SCREW M8-1.25 X 12
407	P1033407	COLLAR
408	P1033408	ROD END BOLT M12-1.75 X 105, ID 20MM
409	P1033409	HEX NUT M12-1.75
410	P1033410	FLAT WASHER 12MM
411	P1033411	HEX BOLT M8-1.25 X 40
412	P1033412	FENDER WASHER 8 X 22 X 3MM
413	P1033413	HEX NUT M8-1.25
414V2	P1033414V2	MOTOR 3HP 230V 1-PH V2.05.18 (G1033)
414V2	P1033Z414V2	MOTOR 5HP 230V 1-PH V2.05.18 (G1033Z)
414V2-1	P1033414V2-1	MOTOR FAN COVER (G1033)
414V2-1	P1033Z414V2-1	MOTOR FAN COVER (G1033Z)
414V2-2	P1033Z414V2-2	CAPACITOR COVER (RUN) (G1033Z)
414V2-3	P1033414V2-3	CAPACITOR COVER (START) (G1033)
414V2-3	P1033Z414V2-3	CAPACITOR COVER (START) (G1033Z)
414V2-4	P1033414V2-4	MOTOR JUNCTION BOX (G1033)
414V2-4	P1033Z414V2-4	MOTOR JUNCTION BOX (G1033Z)
414V2-5	P1033414V2-5	MOTOR FAN (G1033)
414V2-5	P1033Z414V2-5	MOTOR FAN (G1033Z)
414V2-6	P1033Z414V2-6	R CAPACITOR 60M 350V 1-3/4 X 4-5/16 (G1033Z)
414V2-7	P1033414V2-7	S CAPACITOR 600M 125V 1-3/4 X 3-5/16 (G1033)
414V2-7	P1033Z414V2-7	S CAPACITOR 600M 125V 1-3/4 X 3-5/16 (G1033Z)
414V2-8	P1033414V2-8	CONTACT PLATE (G1033)
414V2-8	P1033Z414V2-8	CONTACT PLATE (G1033Z)
414V2-9	P1033414V2-9	BALL BEARING 6205ZZ (FRONT) (G1033)
414V2-9	P1033Z414V2-9	BALL BEARING 6205ZZ (FRONT) (G1033Z)
414V2-10	P1033414V2-10	BALL BEARING 6203ZZ (REAR) (G1033)
414V2-10	P1033Z414V2-10	BALL BEARING 6203ZZ (REAR) (G1033Z)
414V2-11	P1033414V2-11	CENTRIFUGAL SWITCH (G1033)
414V2-11	P1033Z414V2-11	CENTRIFUGAL SWITCH (G1033Z)
415V2	P1033415V2	KEY 5 X 5 X 30 V2.05.18
418	P1033418	STRAIN RELIEF TYPE-3 M25-1.5
419	P1033419	FLAT WASHER 8MM
420	P1033420	STRAIN RELIEF TYPE-3 M25-1.5
421	P1033421	HEX WRENCH 3MM
422	P1033422	HEX WRENCH 4MM
423	P1033423	HEX WRENCH 5MM
424	P1033424	HEX WRENCH 6MM
425	P1033425	FLAT WRENCH 10 X 13MM OPEN-ENDS
426	P1033426	WRENCH 12 X 14MM OPEN-ENDS
427	P1033427	WRENCH 17 X 19MM OPEN-ENDS
428	P1033428	SET SCREW M8-1.25 X 16
429	P1033429	HEX BOLT M8-1.25 X 30

BUY PARTS ONLINE AT GRIZZLY.COM!
Scan QR code to visit our Parts Store.

G1033/G1033Z Table & Base

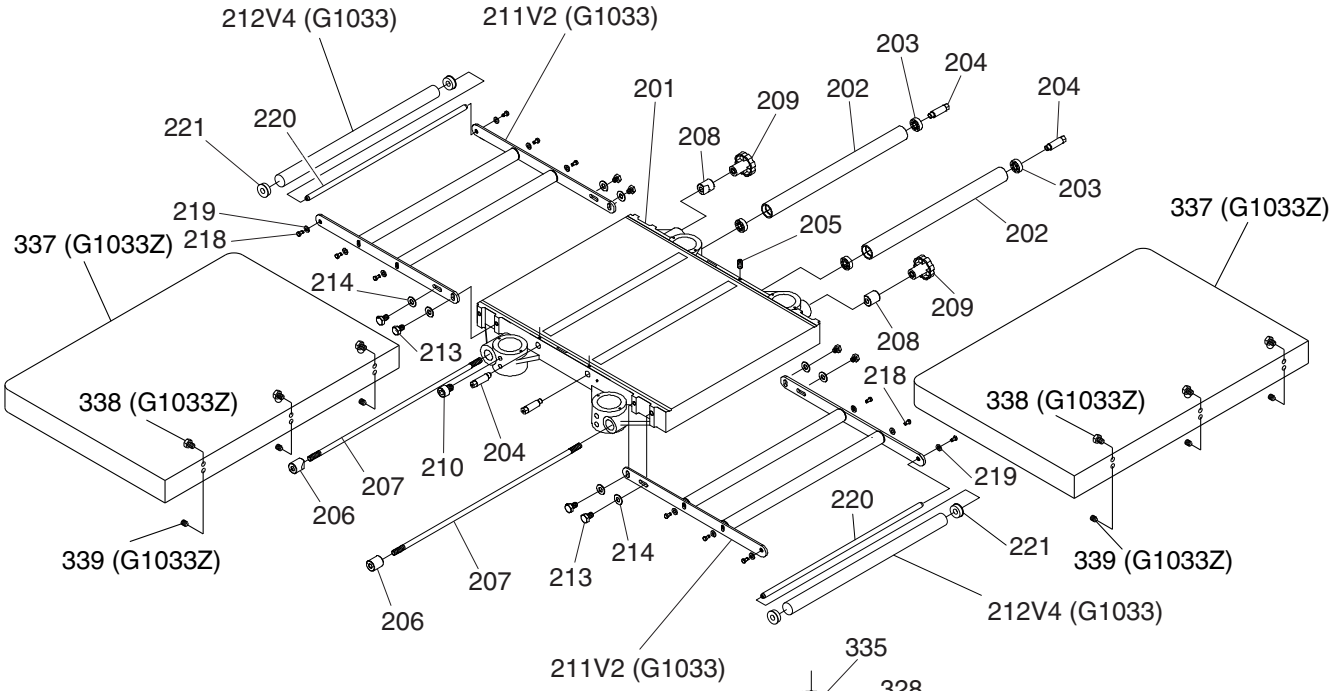

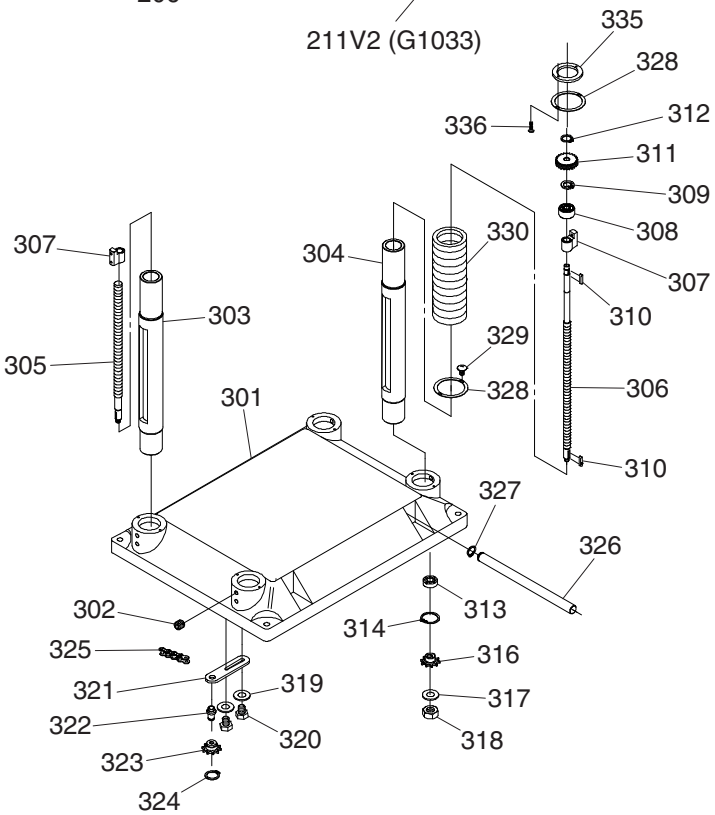

BUY PARTS ONLINE AT GRIZZLY.COM!
Scan QR code to visit our Parts Store.

G1033/G1033Z Table & Base Parts List

REF	PART #	DESCRIPTION
201	P1033201	MAIN TABLE
202	P1033202	MAIN TABLE ROLLER
203	P1033203	BALL BEARING 6201-2RS
204	P1033204	ECCENTRIC SHAFT
205	P1033205	SET SCREW M6-1 X 12
206	P1033206	THREADED GIB
207	P1033207	LOCKING ROD
208	P1033208	GIB
209	P1033209	KNOB 6-LOBE M12-1.75, D53
210	P1033210	CAP SCREW M8-1.25 X 16
211V2	P1033211V2	EXT ROLLER BRACKET V2.03.05 (G1033)
212V4	P1033212V4	EXTENSION TABLE ROLLER V4.05.18 (G1033)
213	P1033213	HEX BOLT M10-1.5 X 25
214	P1033214	FENDER WASHER 13MM
218	P1033218	HEX BOLT M6-1 X 12
219	P1033219	FLAT WASHER 8MM
220	P1033220	EXTENSION ROLLER AXLE
221	P1033221	EXTENSION ROLLER BUSHING, PLASTIC
301	P1033301	BASE
302	P1033302	SET SCREW M10-1.5 X 12
303	P1033303	COLUMN, SECONDARY
304	P1033304	COLUMN, PRIMARY
305	P1033305	LEADSCREW 19.05-4 X 321, SECONDARY
306	P1033306	LEADSCREW 19.05-4 X 335, PRIMARY
307	P1033307	LEADSCREW NUT 19.05-4
308	P1033308	SPACER

REF	PART #	DESCRIPTION
309	P1033309	INT RETAINING RING 38MM
310	P1033310	KEY 4 X 4 X 10
311	P1033311	GEAR 24T
312	P1033312	EXT RETAINING RING 12MM
313	P1033313	BALL BEARING 6202-2RS
314	P1033314	INT RETAINING RING 35MM
316	P1033316	SPROCKET 10T
317	P1033317	FLAT WASHER 10MM
318	P1033318	HEX NUT M10-1.25
319	P1033319	SPACER 8.2 X 22 X 3MM
320	P1033320	HEX BOLT M8-1.25 X 25
321	P1033321	IDLER BRACKET
322	P1033322	IDLER SHAFT
323	P1033323	SPROCKET 10T
324	P1033324	EXT RETAINING RING 15MM
325	P1033325	CHAIN #40 X 166
326	P1033326	LIFTING BAR
327	P1033327	EXT RETAINING RING 17MM
328	P1033328	DUST BOOT FLANGE
329	P1033329	TAP SCREW M5 X 10
330	P1033330	DUST BOOT
335	P1033335	DUST BOOT FLANGE RING
336	P1033336	TAP SCREW M5 X 16
337	P1033Z337	EXTENSION WING (G1033Z)
338	P1033Z338	HEX BOLT M8-1.25 X 25 (G1033Z)
339	P1033Z339	SET SCREW M8-1.25 X 12 (G1033Z)

BUY PARTS ONLINE AT GRIZZLY.COM!
Scan QR code to visit our Parts Store.

G1033/G1033Z Labels & Cosmetics

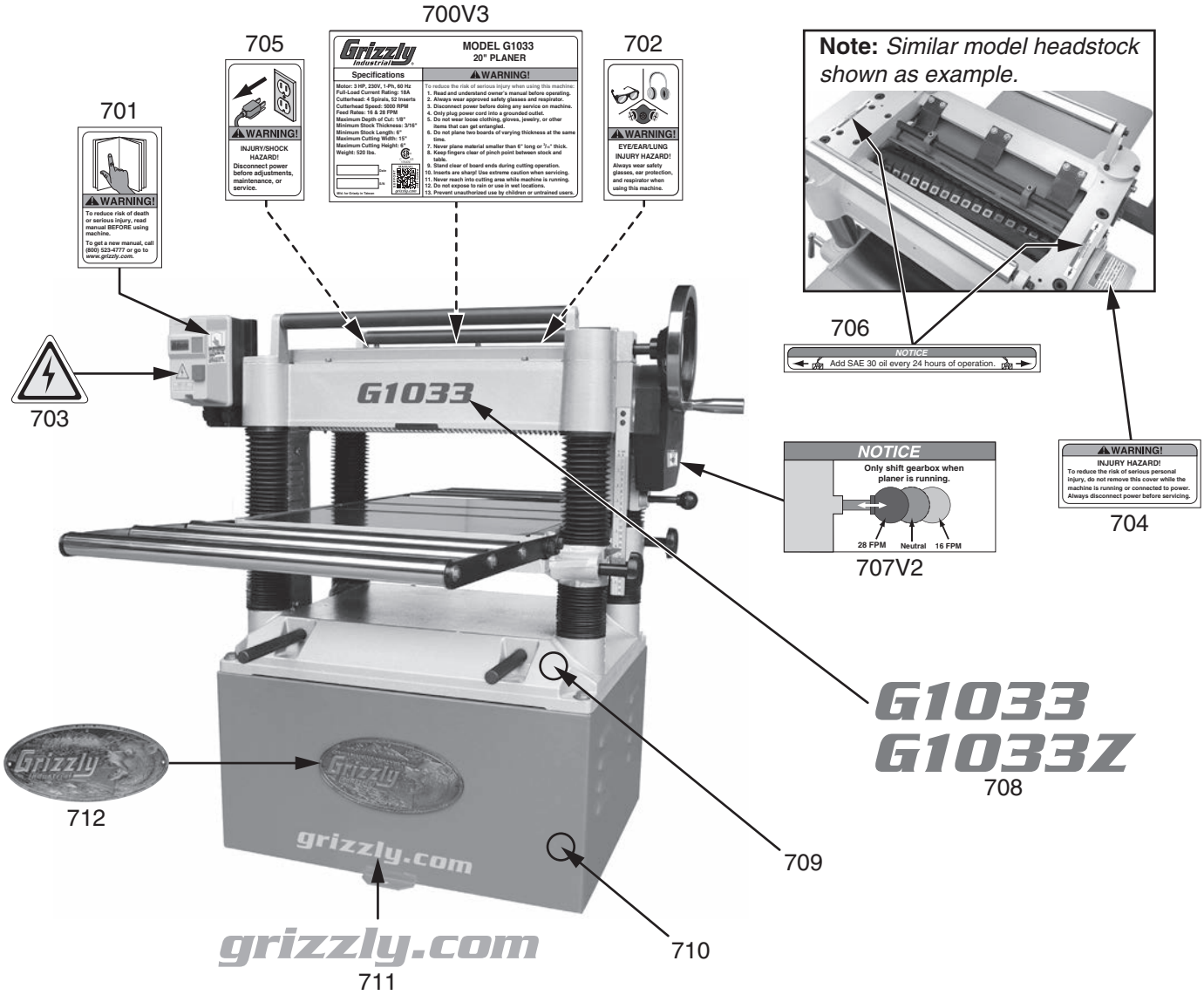

REF	PART #	DESCRIPTION
700V2	P1033700V2	MACHINE ID LABEL V2.08.18 (G1033)
700V2	P1033Z700V2	MACHINE ID LABEL V2.08.18 (G1033Z)
701	P1033701	READ MANUAL LABEL
702	P1033702	EYE/EAR/LUNG INJURY LABEL
703	P1033703	ELECTRICITY LABEL
704	P1033704	BELT COVER WARNING LABEL
705	P1033705	DISCONNECT POWER LABEL
706	P1033706	ADD OIL NOTICE

REF	PART #	DESCRIPTION
707	P1033707	SHIFT GEARBOX NOTICE
708	P1033708	MODEL NUMBER LABEL (G1033)
708	P1033Z708	MODEL NUMBER LABEL (G1033Z)
709	P1033709	TOUCH-UP PAINT, GRIZZLY PUTTY
710	P1033710	TOUCH-UP PAINT, GRIZZLY GREEN
711	P1033711	GRIZZLY.COM LABEL
712	P1033712	GRIZZLY NAMEPLATE-LARGE

⚠WARNING

Safety labels help reduce the risk of serious injury caused by machine hazards. If any label comes off or becomes unreadable, the owner of this machine MUST replace it in the original location before resuming operations. For replacements, contact (800) 523-4777 or www.grizzly.com.

BUY PARTS ONLINE AT GRIZZLY.COM!
Scan QR code to visit our Parts Store.

G1033X Main

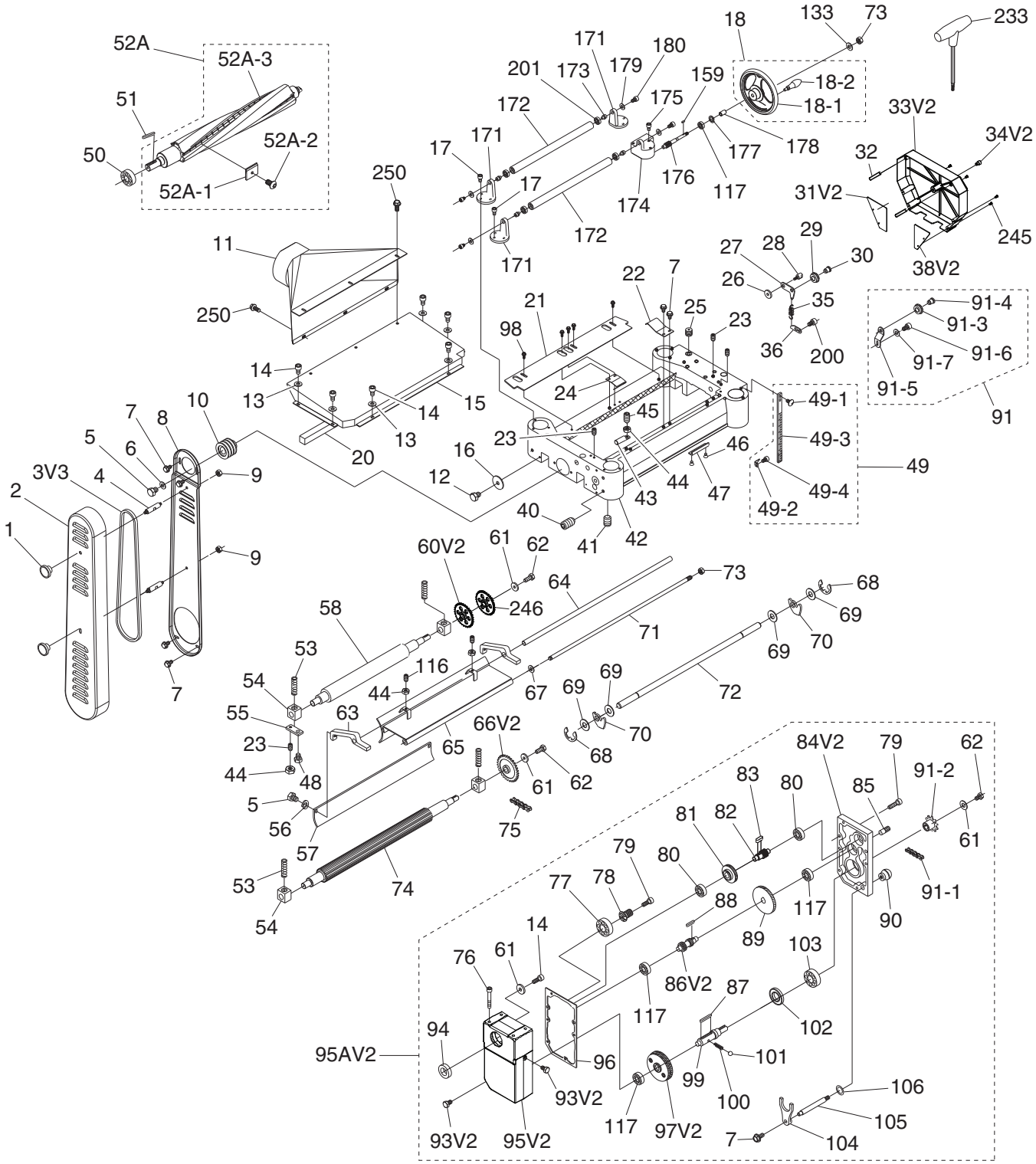

BUY PARTS ONLINE AT GRIZZLY.COM!
Scan QR code to visit our Parts Store.

G1033X Main Parts List

REF	PART #	DESCRIPTION
1	P1033X001	KNOB 5/16-18, D1-3/4, ROUND
2	P1033X002	V-BELT COVER
3V3	P1033X003V3	V-BELT M58 3L580 V3.04.19
4	P1033X004	STANDOFF-HEX MM 5/16-18 X 1/2, 2-5/16
5	P1033X005	HEX BOLT M8-1.25 X 20
6	P1033X006	FENDER WASHER 8MM
7	P1033X007	FLANGE SCREW M6-1 X 12
8	P1033X008	PULLEY GUARD
9	P1033X009	HEX NUT 5/16-18
10	P1033X010	CUTTERHEAD PULLEY
11	P1033X011	DUST HOOD 5"
12	P1033X012	HEX BOLT M6-1 X 12
13	P1033X013	FLAT WASHER 6MM
14	P1033X014	CAP SCREW M6-1 X 12
15	P1033X015	UPPER COVER
16	P1033X016	FLAT WASHER 6MM
17	P1033X017	CAP SCREW M6-1 X 16
18	P1033X018	HANDWHEEL ASSEMBLY
18-1	P1033X018-1	HANDWHEEL TYPE-2 200D X 12B-K X 3/8-16
18-2	P1033X018-2	REVOLVING HANDLE 1 X 3-3/8, 3/8-16 X 1/2
20	P1033X020	GASKET
21	P1033X021	CHIP DEFLECTOR
22	P1033X022	SPRING PLATE
23	P1033X023	SET SCREW M6-1 X 16
24	P1033X024	SPRING PLATE
25	P1033X025	OILER SCREW M22-1.5
26	P1033X026	FLAT WASHER 8MM
27	P1033X027	CHAIN TENSIONER
28	P1033X028	SHAFT M22-.5 X 20
29	P1033X029	IDLER WHEEL
30	P1033X030	IDLER SHAFT 19.05 X 21MM
31V2	P1033X031V2	GEARBOX COVER PLATE-B V2.11.18
32	P1033X032	ROLL PIN 6 X 20
33V2	P1033X033V2	DRIVE CHAIN COVER V2.11.18
34V2	P1033X034V2	CAP SCREW M8-1.25 X 10 V2.11.18
35	P1033X035	EXTENSION SPRING 8.5 X 14
36	P1033X036	SPRING BRACKET
38V2	P1033X038V2	GEARBOX COVER PLATE-A V2.11.18
40	P1033X040	SET SCREW M10-1.5 X 12
41	P1033X041	SET SCREW M8-1.25 X 12
42	P1033X042	HEAD CASTING
43	P1033X043	SHAFT 15.875 X 60
44	P1033X044	HEX NUT M6-1
45	P1033X045	SET SCREW M6-1 X 20
46	P1033X046	FLAT HD SCR M5-.8 X 8
47	P1033X047	DEPTH LIMITER
48	P1033X048	HEX BOLT M8-1.25 X 20
49	P1033X049	SCALE ASSEMBLY
49-1	P1033X049-1	PHLP HD SCR M6-1 X 12
49-2	P1033X049-2	POINTER
49-3	P1033X049-3	SCALE
49-4	P1033X049-4	CAP SCREW M5-.8 X 10
50	P1033X050	BALL BEARING 6206ZZ
51	P1033X051	KEY 8 X 8 X 35

REF	PART #	DESCRIPTION
52A	P1033X052A	HELICAL CUTTERHEAD ASSY V2.07.07
52A-1	P1033X052A-1	INSERTS 15 X 15 X 2.5-10 PK
52A-2	P1033X052A-2	FLAT HEAD TORX 10-32 X 1/2
52A-3	P1033X052A-3	HELICAL CUTTERHEAD BODY V2.07.07
53	P1033X053	COMPRESSION SPRING 19.7 X 12
54	P1033X054	BUSHING BLOCK
55	P1033X055	BUSHING BLOCK PLATE
56	P1033X056	LOCK WASHER 8MM
57	P1033X057	PRESSURE BAR
58	P1033X058	OUTFEED ROLLER
60V2	P1033X060V2	SPROCKET 31T V2.05.18
61	P1033X061	FLAT WASHER 6MM
62	P1033X062	HEX BOLT M6-1 X 16
63	P1033X063	BRACKET
64	P1033X064	SHAFT 15.875 X 710
65	P1033X065	CHIP BREAKER
66V2	P1033X066V2	SPROCKET 31T V2.05.18
67	P1033X067	EXT RETAINING RING 12MM
68	P1033X068	E-CLIP 15MM
69	P1033X069	SPACER
70	P1033X070	ANTI-KICKBACK FINGER
71	P1033X071	LOCK ROD
72	P1033X072	SHAFT 19.95 X 680
73	P1033X073	HEX NUT M12-1.75
74	P1033X074	INFEED ROLLER
75	P1033X075	CHAIN
76	P1033X076	CAP SCREW M8-1.25 X 50
77	P1033X077	BALL BEARING 6204ZZ
78	P1033X078	GEAR 16T
79	P1033X079	CAP SCREW M6-1 X 25
80	P1033X080	BALL BEARING 6201ZZ
81	P1033X081	GEAR 47T
82	P1033X082	GEARED SHAFT 18T
83	P1033X083	KEY 5 X 5 X 12
84V2	P1033X084V2	GEARBOX COVER V2.11.18
85	P1033X085	LOCATING PIN 8 X 7.55 X 7.95
86V2	P1033X086V2	GEAR 28T/18T 2-SPEED V2.02.19
87	P1033X087	KEY 6 X 6 X 40
88	P1033X088	KEY 5 X 5 X 10
89	P1033X089	GEAR 71T
90	P1033X090	KNOB 3/8-16, D1-5/16, BALL
91	P1033X091	SPROCKET & CHAIN ASSY
91-1	P1033X091-1	CHAIN
91-2	P1033X091-2	SPROCKET
91-3	P1033X091-3	OUTER CHAIN TENSIONER
91-4	P1033X091-4	SHAFT 19.05 X 21
91-5	P1033X091-5	BRACKET
91-6	P1033X091-6	CAP SCREW M6-1 x 35
91-7	P1033X091-7	FLAT WASHER 6MM
93V2	P1033X093V2	OIL PLUG 1/4 NPT X 3/4" V2.11.18
94	P1033X094	OIL SEAL 28 X 40 X 8
95V2	P1033X095V2	GEARBOX V2.11.18
95AV2	P1033X095AV2	GEARBOX ASSY V2.11.18
96	P1033X096	GASKET

BUY PARTS ONLINE AT GRIZZLY.COM!
Scan QR code to visit our Parts Store.

G1033X Main Parts List (Cont.)

REF	PART #	DESCRIPTION
97V2	P1033X097V2	COMBO GEAR 86T/96T V2.02.19
98	P1033X098	FLANGE SCREW M6-1 X 16
99	P1033X099	SHAFT 20 X 106
100	P1033X100	COMPRESSION SPRING 5.9 X 9
101	P1033X101	STEEL BALL 6MM
102	P1033X102	OIL SEAL 25 X 47 X 6
103	P1033X103	BALL BEARING 6204ZZ
104	P1033X104	SHIFTER
105	P1033X105	SHIFTING SHAFT
106	P1033X106	O-RING 12 X 2.4
116	P1033X116	SET SCREW M6-1 X 12
117	P1033X117	BALL BEARING 6201ZZ
133	P1033X133	FLAT WASHER 12MM
159	P1033X159	KEY 4 X 4 X 10
171	P1033X171	RETURN ROLLER BRACKET

REF	PART #	DESCRIPTION
172	P1033X172	RETURN ROLLER
173	P1033X173	BEARING SHAFT
174	P1033X174	WORM GEAR HOUSING
175	P1033X175	CAP SCREW M6-1 X 50
176	P1033X176	WORM SHAFT
177	P1033X177	INT RETAINING RING 32MM
178	P1033X178	COLLAR
179	P1033X179	FLAT WASHER 6MM
180	P1033X180	CAP SCREW M6-1 X 10
200	P1033X200	CAP SCREW M6-1 X 10
201	P1033X201	BALL BEARING 6202ZZ
233	P1033X233	T-HANDLE T-25 TORX DRIVER
245	P1033X245	PHLP HD SCR M4-.7 X 8
246	P1033X246	SPROCKET 31T
250	P1033X250	FLANGE BOLT M6-1 X 12

BUY PARTS ONLINE AT GRIZZLY.COM!
Scan QR code to visit our Parts Store.

G1033X Stand & Motor

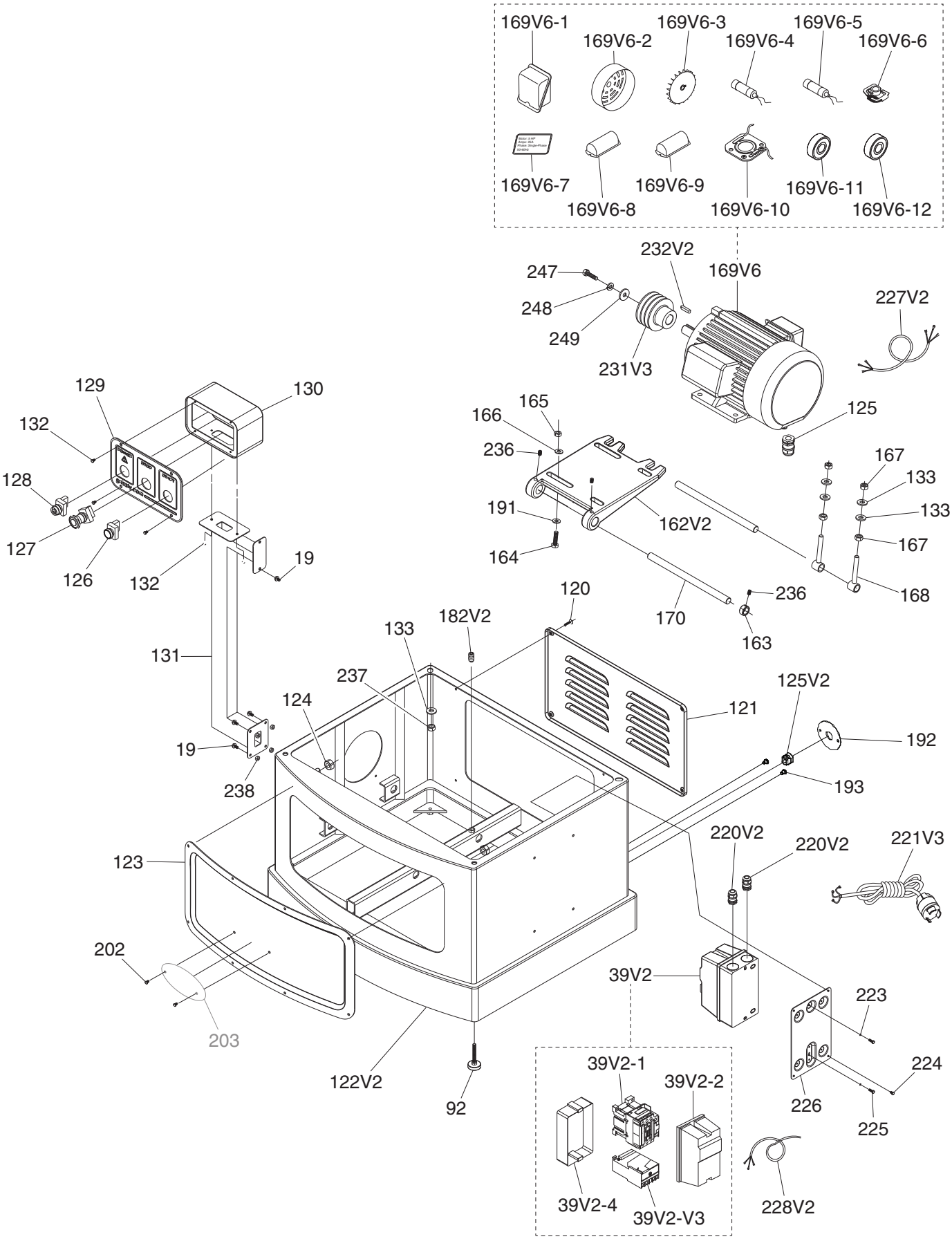

BUY PARTS ONLINE AT GRIZZLY.COM!
Scan QR code to visit our Parts Store.

G1033X Stand & Motor Parts List

REF	PART #	DESCRIPTION
19	P1033X019	FLANGE SCREW M6-1 X 12
39V2	P1033X039V2	MAGNETIC SWITCH SDE MPE-30 V2.04.19
39V2-1	P1033X039V2-1	CONTACTOR SDE MA-30 220-240V
39V2-2	P1033X039V2-2	MAGNETIC SWITCH COVER (FRONT)
39V2-3	P1033X039V2-3	OL RELAY SDE RA-30 22-34A
39V2-4	P1033X039V2-4	MAGNETIC SWITCH COVER (REAR)
92	P1033X092	FOOT
120	P1033X120	FLAT HD SCR M6-1 X 20
121	P1033X121	MOTOR ACCESS PANEL
122V2	P1033X122V2	CABINET STAND V2.04.19
123	P1033X123	CABINET STAND FRONT COVER
124	P1033X124	HEX NUT M5-.8
125	P1033X125	STRAIN RELIEF TYPE-3 M25-1.5
125V2	P1033X125V2	STRAIN RELIEF TYPE-1 3/4 V2.04.19
126	P1033X126	START SWITCH
127	P1033X127	E-STOP BUTTON RENY R9C01VN
128	P1033X128	POWER INDICATOR LIGHT 220V 22MM RED
129	P1033X129	SWITCH PANEL
130	P1033X130	SWITCH BOX
131	P1033X131	SWITCH PEDESTAL
132	P1033X132	PHLP HD SCR M5-.8 X 10
133	P1033X133	FLAT WASHER 12MM
162V2	P1033X162V2	MOTOR MOUNT PLATE V2.04.19
163	P1033X163	COLLAR
164	P1033X164	HEX BOLT M8-1.25 X 40
165	P1033X165	HEX NUT M8-1.25
166	P1033X166	FLAT WASHER 8MM
167	P1033X167	HEX NUT M12-1.75
168	P1033X168	ROD END BOLT M12-1.75 X 120, 25.4
169V6	P1033X169V6	MOTOR 5HP 230V 1-PH V6.04.19
169V6-1	P1033X169V6-1	MOTOR JUNCTION BOX
169V6-2	P1033X169V6-2	MOTOR FAN COVER

REF	PART #	DESCRIPTION
169V6-3	P1033X169V6-3	MOTOR FAN
169V6-4	P1033X169V6-4	S CAPACITOR 600M 125V 1-3/4 X 3-5/16
169V6-5	P1033X169V6-5	R CAPACITOR 60M 350V 1-3/4 X 4-5/16
169V6-6	P1033X169V6-6	CENTRIFUGAL SWTICH
169V6-7	P1033X169V6-7	MOTOR LABEL
169V6-8	P1033X169V6-8	CAPACITOR COVER (START)
169V6-9	P1033X169V6-9	CAPACITOR COVER (RUN)
169V6-10	P1033X169V6-10	CONTACT PLATE
169V6-11	P1033X169V6-11	BALL BEARING 6203ZZ (REAR)
169V6-12	P1033X169V6-12	BALL BEARING 6205ZZ (FRONT)
170	P1033X170	PLATE CONNECTING ROD
182V2	P1033X182V2	SET SCREW M8-1.25 X 16 (NYLOCK) V2.04.19
191	P1033X191	FLAT WASHER 8MM
192	P1033X192	STRAIN RELIEF MOUNTING PLATE
193	P1033X193	PHLP HD SCR M6-1 X 8
202	P1033X202	PHLP HD SCR M4-.7 X 10
220V2	P1033X220V2	STRAIN RELIEF TYPE-3 M25-1.5 V2.04.19
221V3	P1033X221V3	POWER CORD 12G 3W 145" L6-30P V3.04.19
223	P1033X223	EXT TOOTH WASHER 5MM
224	P1033X224	PHLP HD SCR M5-.8 X 10
225	P1033X225	PHLP HD SCR M5-.8 X 15
226	P1033X226	SWITCH PANEL
227V2	P1033X227V2	MOTOR CORD 12G 3W 37" V2.04.19
228V2	P1033X228V2	SWITCH CORD 18G 5W 72" V2.04.19
231V3	P1033X231V3	MOTOR PULLEY V3.04.19
232V2	P1033X232V2	KEY 5 X 5 X 30 V2.04.19
236	P1033X236	SET SCREW M8-1.25 X 12
237	P1033X237	HEX NUT M12-1.75
238	P1033X238	HEX NUT M6-1
247	P1033X247	HEX BOLT M8-1.25 X 20
248	P1033X248	LOCK WASHER 8MM
249	P1033X249	FENDER WASHER 8MM

BUY PARTS ONLINE AT GRIZZLY.COM!
Scan QR code to visit our Parts Store.

G1033X Table & Base

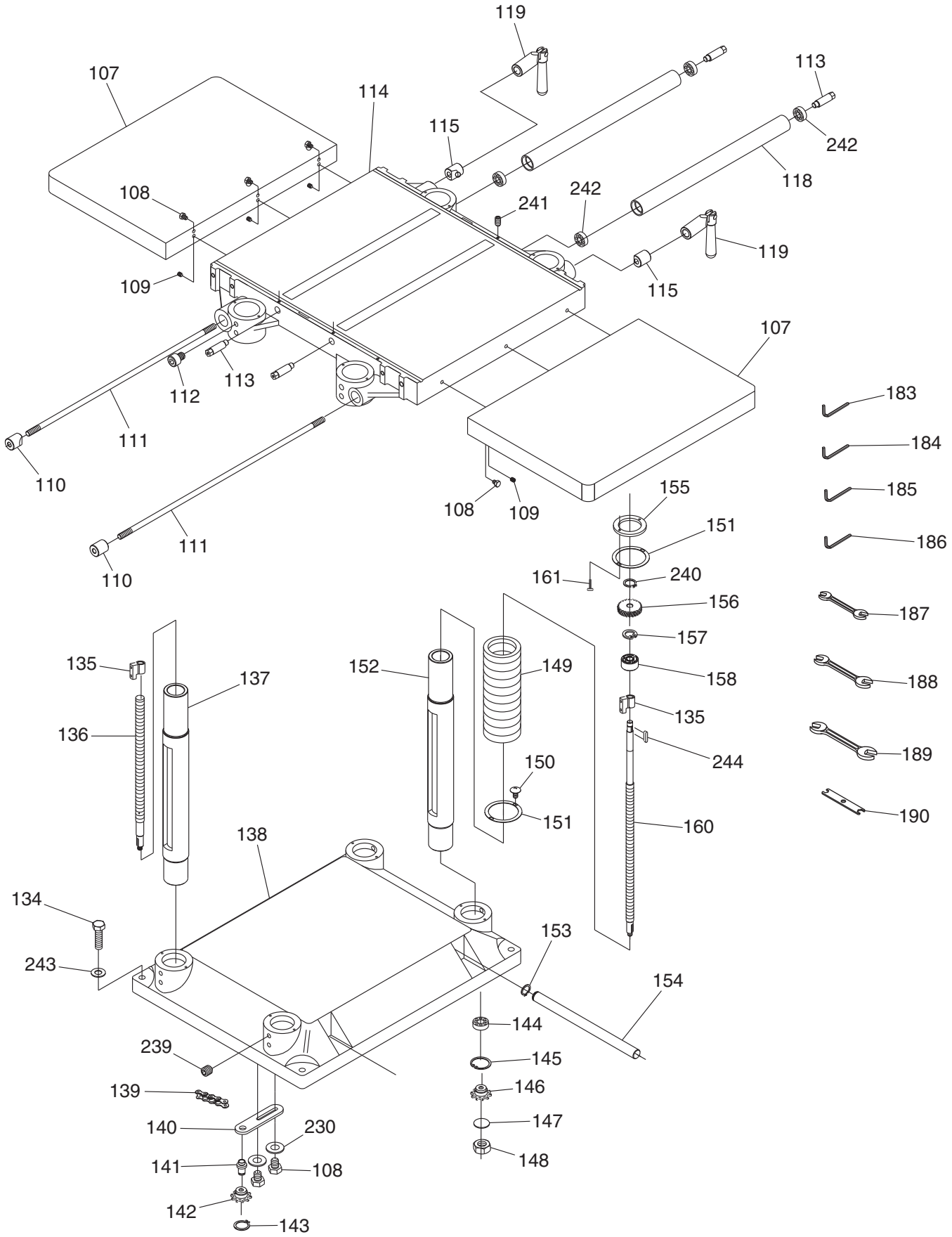

BUY PARTS ONLINE AT GRIZZLY.COM!
Scan QR code to visit our Parts Store.

G1033X Table & Base Parts List

REF	PART #	DESCRIPTION
107	P1033X107	EXTENSION WING
108	P1033X108	HEX BOLT M8-1.25 X 25
109	P1033X109	SET SCREW M8-1.25 X 12
110	P1033X110	THREADED GIB
111	P1033X111	LOCK ROD
112	P1033X112	CAP SCREW M8-1.25 X 16
113	P1033X113	ECCENTRIC SHAFT
114	P1033X114	MIDDLE TABLE
115	P1033X115	GIB
118	P1033X118	TABLE ROLLER
119	P1033X119	LOCK HANDLE M12-1.75
134	P1033X134	HEX BOLT M12-1.75 X 50
135	P1033X135	LEADSCREW NUT 15.5 X 41.5
136	P1033X136	LEADSCREW M10 X 1.25 X 400, SECONDARY
137	P1033X137	COLUMN, SECONDARY
138	P1033X138	BASE
139	P1033X139	CHAIN
140	P1033X140	IDLER BRACKET
141	P1033X141	IDLER SHAFT 15 X 34MM
142	P1033X142	SPROCKET
143	P1033X143	EXT RETAINING RING 15MM
144	P1033X144	BALL BEARING 6202ZZ
145	P1033X145	INT RETAINING RING 35MM
146	P1033X146	SPROCKET
147	P1033X147	FLAT WASHER 10MM
148	P1033X148	HEX NUT M10-1.25
149	P1033X149	DUST BOOT

REF	PART #	DESCRIPTION
150	P1033X150	PHLP HD SCR M5-.8 X 10
151	P1033X151	DUST BOOT FLANGE
152	P1033X152	COLUMN, PRIMARY
153	P1033X153	EXT RETAINING RING 17MM
154	P1033X154	LIFTING BAR
155	P1033X155	DUST BOOT FLANGE RING
156	P1033X156	WORM GEAR
157	P1033X157	INT RETAINING RING 38MM
158	P1033X158	BUSHING 14 X 20
160	P1033X160	LEADSCREW M10 X 1.25 X 582, PRIMARY
161	P1033X161	PHLP HD SCR M5-.8 X 8
183	P1033X183	HEX WRENCH 3MM
184	P1033X184	HEX WRENCH 4MM
185	P1033X185	HEX WRENCH 5MM
186	P1033X186	HEX WRENCH 6MM
187	P1033X187	WRENCH 8 X 10MM OPEN-ENDS
188	P1033X188	WRENCH 12 X 14MM OPEN-ENDS
189	P1033X189	WRENCH 17 X 19MM OPEN-ENDS
190	P1033X190	FLAT WRENCH 10 X 13MM OPEN-ENDS
230	P1033X230	FLAT WASHER 8MM
239	P1033X239	SET SCREW M10-1.5 X 12
240	P1033X240	EXT RETAINING RING 12MM
241	P1033X241	SET SCREW M6-1 X 12
242	P1033X242	BALL BEARING 6201ZZ
243	P1033X243	FLAT WASHER 12MM
244	P1033X244	KEY 4 X 4 X 10

BUY PARTS ONLINE AT GRIZZLY.COM!
Scan QR code to visit our Parts Store.

G1033X Labels & Cosmetics

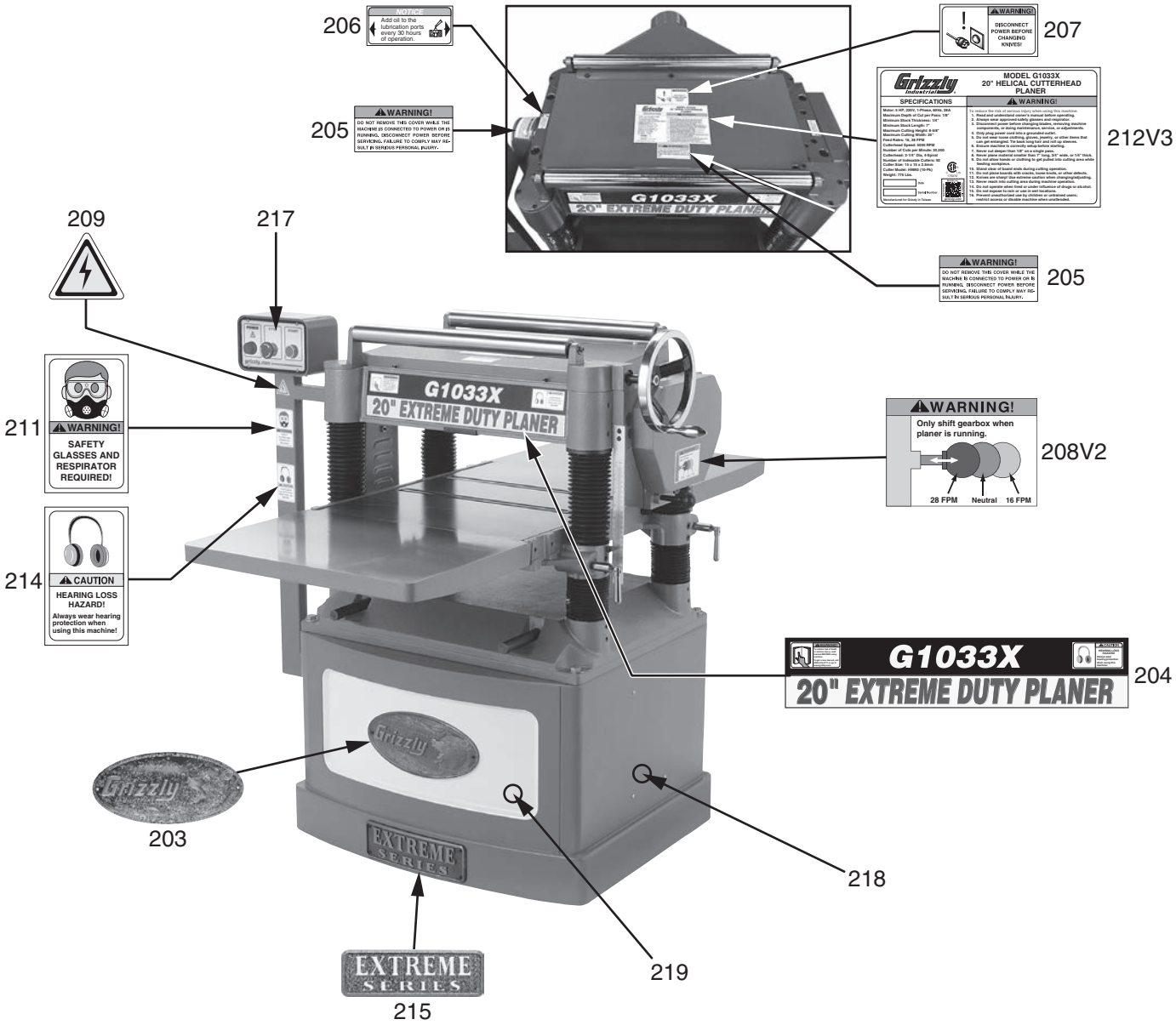

REF	PART #	DESCRIPTION
203	P1033X203	GRIZZLY NAMEPLATE
204	P1033X204	MODEL NUMBER LABEL
205	P1033X205	WARNING LABEL-DO NOT REMOVE COVER
206	P1033X206	LUBRICATION NOTICE
207	P1033X207	DISCONNECT POWER LABEL
208V2	P1033X208V2	GEARBOX SHIFT WARNING V2.02.19
209	P1033X209	ELECTRICITY LABEL

REF	PART #	DESCRIPTION
211	P1033X211	RESPIRATOR/GLASSES WARNING
212V3	P1033X212V3	MACHINE ID LABEL V3.04.19
214	P1033X214	EAR PROTECTION WARNING
215	P1033X215	EXTREME SERIES PLATE
217	P1033X217	CONTROL PANEL LABEL
218	P1033X218	TOUCH-UP PAINT, GRIZZLY GREEN
219	P1033X219	TOUCH-UP PAINT, GRIZZLY PUTTY

⚠WARNING

Safety labels help reduce the risk of serious injury caused by machine hazards. If any label comes off or becomes unreadable, the owner of this machine MUST replace it in the original location before resuming operations. For replacements, contact (800) 523-4777 or www.grizzly.com.

BUY PARTS ONLINE AT GRIZZLY.COM!
Scan QR code to visit our Parts Store.

WARRANTY CARD

Name _____

Street _____

City _____ State _____ Zip _____

Phone # _____ Email _____

Model # _____ Order # _____ Serial # _____

The following information is given on a voluntary basis. It will be used for marketing purposes to help us develop better products and services. ***Of course, all information is strictly confidential.***

1. How did you learn about us?

____ Advertisement ____ Friend ____ Catalog
____ Card Deck ____ Website ____ Other:

2. Which of the following magazines do you subscribe to?

____ Cabinetmaker & FDM
____ Family Handyman
____ Hand Loader
____ Handy
____ Home Shop Machinist
____ Journal of Light Cont.
____ Live Steam
____ Model Airplane News
____ Old House Journal
____ Popular Mechanics
____ Popular Science
____ Popular Woodworking
____ Precision Shooter
____ Projects in Metal
____ RC Modeler
____ Rifle
____ Shop Notes
____ Shotgun News
____ Today's Homeowner
____ Wood
____ Wooden Boat
____ Woodshop News
____ Woodsmith
____ Woodwork
____ Woodworker West
____ Woodworker's Journal
____ Other:

3. What is your annual household income?

____ $20,000-$29,000 ____ $30,000-$39,000 ____ $40,000-$49,000
____ $50,000-$59,000 ____ $60,000-$69,000 ____ $70,000+

4. What is your age group?

____ 20-29 ____ 30-39 ____ 40-49
____ 50-59 ____ 60-69 ____ 70+

5. How long have you been a woodworker/metalworker?

____ 0-2 Years ____ 2-8 Years ____ 8-20 Years ____ 20+ Years

6. How many of your machines or tools are Grizzly?

____ 0-2 ____ 3-5 ____ 6-9 ____ 10+

7. Do you think your machine represents a good value? _____Yes _____No

8. Would you recommend Grizzly Industrial to a friend? _____Yes _____No

9. Would you allow us to use your name as a reference for Grizzly customers in your area?
Note: *We never use names more than 3 times.* _____Yes _____No

10. Comments: _____

_____

_____

_____

CUT ALONG DOTTED LINE

FOLD ALONG DOTTED LINE

Place
Stamp
Here

GRIZZLY INDUSTRIAL, INC.
P.O. BOX 2069
BELLINGHAM, WA 98227-2069

FOLD ALONG DOTTED LINE

Send a Grizzly Catalog to a friend:

Name_____

Street_____

City_____State_____Zip_____

TAPE ALONG EDGES--PLEASE DO NOT STAPLE

WARRANTY & RETURNS

Grizzly Industrial, Inc. warrants every product it sells for a period of **1 year** to the original purchaser from the date of purchase. This warranty does not apply to defects due directly or indirectly to misuse, abuse, negligence, accidents, repairs or alterations or lack of maintenance. This is Grizzly's sole written warranty and any and all warranties that may be implied by law, including any merchantability or fitness, for any particular purpose, are hereby limited to the duration of this written warranty. We do not warrant or represent that the merchandise complies with the provisions of any law or acts unless the manufacturer so warrants. In no event shall Grizzly's liability under this warranty exceed the purchase price paid for the product and any legal actions brought against Grizzly shall be tried in the State of Washington, County of Whatcom.

We shall in no event be liable for death, injuries to persons or property or for incidental, contingent, special, or consequential damages arising from the use of our products.

To take advantage of this warranty, contact us by mail or phone and give us all the details. We will then issue you a "Return Number,'' which must be clearly posted on the outside as well as the inside of the carton. We will not accept any item back without this number. Proof of purchase must accompany the merchandise.

The manufacturers reserve the right to change specifications at any time because they constantly strive to achieve better quality equipment. We make every effort to ensure that our products meet high quality and durability standards and we hope you never need to use this warranty.

Please feel free to write or call us if you have any questions about the machine or the manual.

Thank you again for your business and continued support. We hope to serve you again soon.

grizzly.com®
TOOL WEBSITE

Buy Direct and Save with Grizzly® – Trusted, Proven and a Great Value!

~Since 1983~

Visit Our Website Today For Current Specials!

ORDER

24 HOURS A DAY!

1-800-523-4777

VISA MasterCard DISCOVER NOVUS AMERICAN EXPRESS