READ THIS FIRST

Models G9740, G9740Z, G9741, G9961

******IMPORTANT UPDATE******

For Machines Mfd. Since 10/13 and Owner's Manual Revised 11/03

For questions or help with this product contact Tech Support at (570) 546-9663 or techsupport@grizzly.com

The following change was made since the owner's manual was printed:

- Cutterheads changed from tapered shaft to straight shaft with a machine key.

Aside from this information, all other content in the owner's manual applies and MUST be read and understood for your own safety. **IMPORTANT: Keep this update with the owner's manual for future reference.**

For questions or help, contact our Tech Support at (570) 546-9663 or techsupport@grizzly.com.

Revised G9740/G9741 Parts

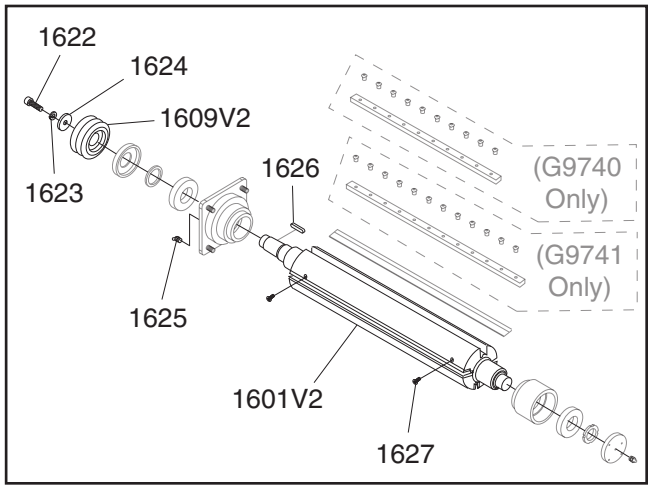

REF	PART #	DESCRIPTION
1601V2	P97401601V2	CUTTERHEAD 20" 4-KNIFE V2.10.13 (G9740)
1601V2	P97411601V2	CUTTERHEAD 24" 4-KNIFE V2.10.13 (G9741)
1609V2	P97401609V2	CUTTERHEAD PULLEY V2.10.13
1622	P97401622	CAP SCREW M10-1.5 X 30
1623	P97401623	LOCK WASHER 10MM
1624	P97401624	FENDER WASHER 10MM
1625	P97401625	GREASE FITTING 1/8" PT 45-DEG
1626	P97401626	KEY 10 X 8 X 45
1627	P97401627	FLAT HD SCR M6-1 X 16

Revised G9740Z/G9961 Parts

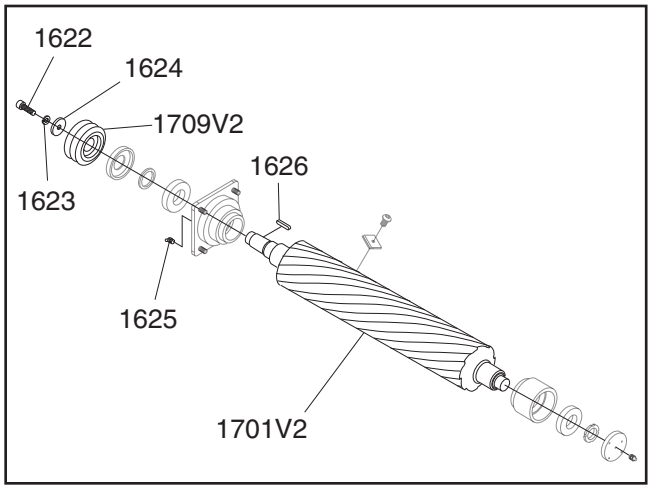

REF	PART #	DESCRIPTION
1622	P9740Z1622	CAP SCREW M10-1.5 X 30
1623	P9740Z1623	LOCK WASHER 10MM
1624	P9740Z1624	FENDER WASHER 10MM
1625	P9740Z1625	GREASE FITTING 1/8" PT 45-DEG
1626	P9740Z1626	KEY 10 X 8 X 45
1701V2	P9740Z1701V2	CUTTERHEAD 20" SPIRAL V2.10.13 (G9740Z)
1701V2	P99611701V2	CUTTERHEAD 24" SPIRAL V2.10.13 (G9961)
1709V2	P9740Z1709V2	CUTTERHEAD PULLEY V2.10.13

COPYRIGHT © JUNE, 2021 BY GRIZZLY INDUSTRIAL, INC.
WARNING: NO PORTION OF THIS MANUAL MAY BE REPRODUCED IN ANY SHAPE OR FORM WITHOUT THE WRITTEN APPROVAL OF GRIZZLY INDUSTRIAL, INC.
#CS20569 PRINTED IN TAIWAN

READ THIS FIRST

Models G9740, G9740Z, G9741, G9961

******IMPORTANT UPDATE******

For Machines Mfd. Since 06/12 and Owner's Manual Revised 11/03

For questions or help with this product contact Tech Support at (570) 546-9663 or techsupport@grizzly.com

The following change was made since the owner's manual was printed:

- Revised Test Run instructions.

Aside from this information, all other content in the owner's manual applies and MUST be read and understood for your own safety. **IMPORTANT: Keep this update with the owner's manual for future reference.**

For questions or help, contact our Tech Support at (570) 546-9663 or techsupport@grizzly.com.

NOTICE

After connection to power supply, DO NOT operate cutterhead until you verify correct phase polarity. Verify correct phase polarity by ensuring table moves in correct direction per TEST RUN instructions on the following page. Not following this advice could result in serious machine damage!

COPYRIGHT © NOVEMBER, 2017 BY GRIZZLY INDUSTRIAL, INC.
WARNING: NO PORTION OF THIS MANUAL MAY BE REPRODUCED IN ANY SHAPE OR FORM WITHOUT THE WRITTEN APPROVAL OF GRIZZLY INDUSTRIAL, INC.
#BL19358 PRINTED IN TAIWAN

Test Run

Once assembly is complete, test run the machine to ensure it is properly connected to power and safety components are functioning correctly.

If you find an unusual problem during the test run, immediately stop the machine, disconnect it from power, and fix the problem BEFORE operating the machine again. The **Troubleshooting** table in the **SERVICE** section of this manual can help.

The test run consists of verifying the following: 1) Power supply phase polarity is correct (i.e., the table moves the correct direction), 2) the safety feature of the Emergency Stop button works correctly, 3) and table limit switches work correctly.

The factory inspected all motors before the machine was shipped. However, you MUST still verify phase polarity is correct by checking table movement before running the cutterhead. If you do not, the machine could be seriously damaged! Checking table movement is the safest, most visual method of verifying phase polarity. Generally, if one motor is out of phase, all the motors will be out of phase.

⚠WARNING

Serious injury or death can result from using this machine BEFORE understanding its controls and related safety information. DO NOT operate, or allow others to operate, machine until the information is understood.

⚠WARNING

DO NOT start machine until all preceding setup instructions have been performed. Operating an improperly set up machine may result in malfunction or unexpected results that can lead to serious injury, death, or machine/property damage.

To test run machine:

1. Clear all setup tools and loose objects away from machine.

2. Connect machine to power supply.

3. Push Emergency Stop button (see **Figure 2**) in, then twist it clockwise so it pops out (see **Figure 3**). Power lamp will illuminate. When STOP button pops out, switch is reset, and machine is ready for operation.

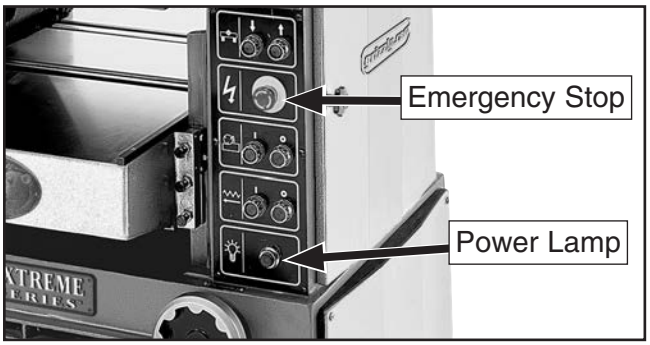

Figure 2. Location of power lamp.

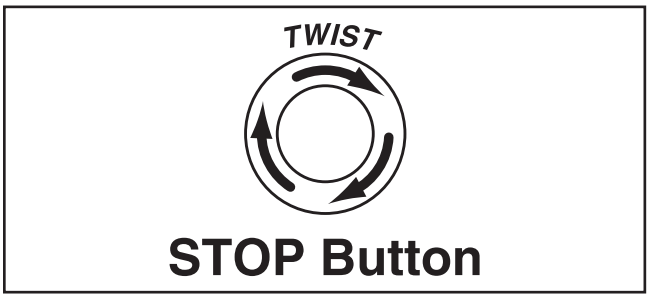

Figure 3. Resetting Emergency Stop Button.

4. Verify proper phase polarity by checking that table moves *down* when you push table height down button ↓ (see **Figure 4**). If it does, proceed to **Step 5**.

Figure 4. Location of table height down button.

—If table moves *up*, DISCONNECT MACHINE FROM POWER! Phase of incoming power supply is reversed. Open rear electrical panel door, swap wires at "R" and "T" terminals (see **Figure 5** on next page), then close door and reconnect machine to power.

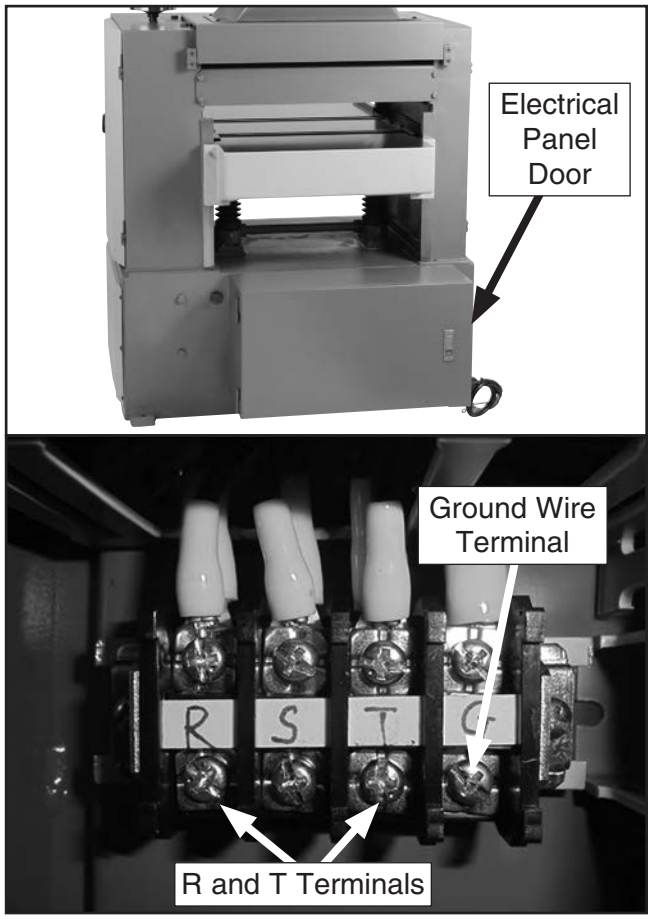

Figure 5. Up-close view of power supply terminals inside electrical panel.

⚠WARNING

DO NOT swap "R" or "T" wires with ground wire. Doing so will electrify machine frame, which could cause electrocution. Make sure incoming ground wire is only connected to right-most terminal post so machine is properly grounded.

5. Use table height down button ↓ to move table down several inches to ensure adequate clearance between table and cutterhead.

6. Press Emergency Stop button to turn machine ***OFF***.

7. WITHOUT resetting Emergency Stop button, press cutterhead ON button (see **Figure 6**). Cutterhead should *not* start.

Figure 6. Location of cutterhead ON button.

—If cutterhead *does* start (with Emergency Stop button pushed in), immediately disconnect power to machine. Emergency Stop button safety feature is not working correctly. This safety feature must work properly before proceeding with regular operations. Call Tech Support for help.

8. Reset Emergency Stop button.

9. Using table up button ↑, move table as far up as possible. When it reaches top most position you should *hear* the limit switch click. You should *not* be able to move the table up any further.

10. Reset Emergency Stop button.

11. Using table down button ↓, move table down as far as possible. When it reaches bottom most position you should hear the limit switch click. You should *not* be able to move table down any further.

Congratulations. **Test Run** is complete!

READ THIS FIRST

Models G9740, G9740Z, G9741, G9961

IMPORTANT UPDATE

Applies to Owner's Manual
Revised November, 2003

The following changes were recently made to these machines, making some parts of the owner's manual no longer applicable:

Applies to models manufactured since June, 2007:

- Pressure bar assembly changed (see **Page 8**).

Applies to models manufactured since June, 2012:

- Electrical cabinet components for 220V and 440V operation changed (see **Page 2**).
- Instructions for converting to 440V operation changed (see **Page 3**).
- Electrical cabinet, motor, control panel, and limit switch wiring changed to the Star-Delta start configuration (see Pages **4–7**).

This document provides the relevant updates to the owner's manual—aside from this information, all other content in the owner's manual applies and MUST be read and understood for your own safety. **IMPORTANT: Keep this update with the owner's manual for future reference.**

For questions or help, contact our Tech Support at (570) 546-9663 or techsupport@grizzly.com.

COPYRIGHT © JANUARY, 2014 BY GRIZZLY INDUSTRIAL, INC. REVISED MARCH, 2017 (TR)
WARNING: NO PORTION OF THIS MANUAL MAY BE REPRODUCED IN ANY SHAPE OR FORM WITHOUT THE WRITTEN APPROVAL OF GRIZZLY INDUSTRIAL, INC.
#TS16228 PRINTED IN TAIWAN

Electrical Cabinet Components

Applies to Models Manufactured Since June, 2012

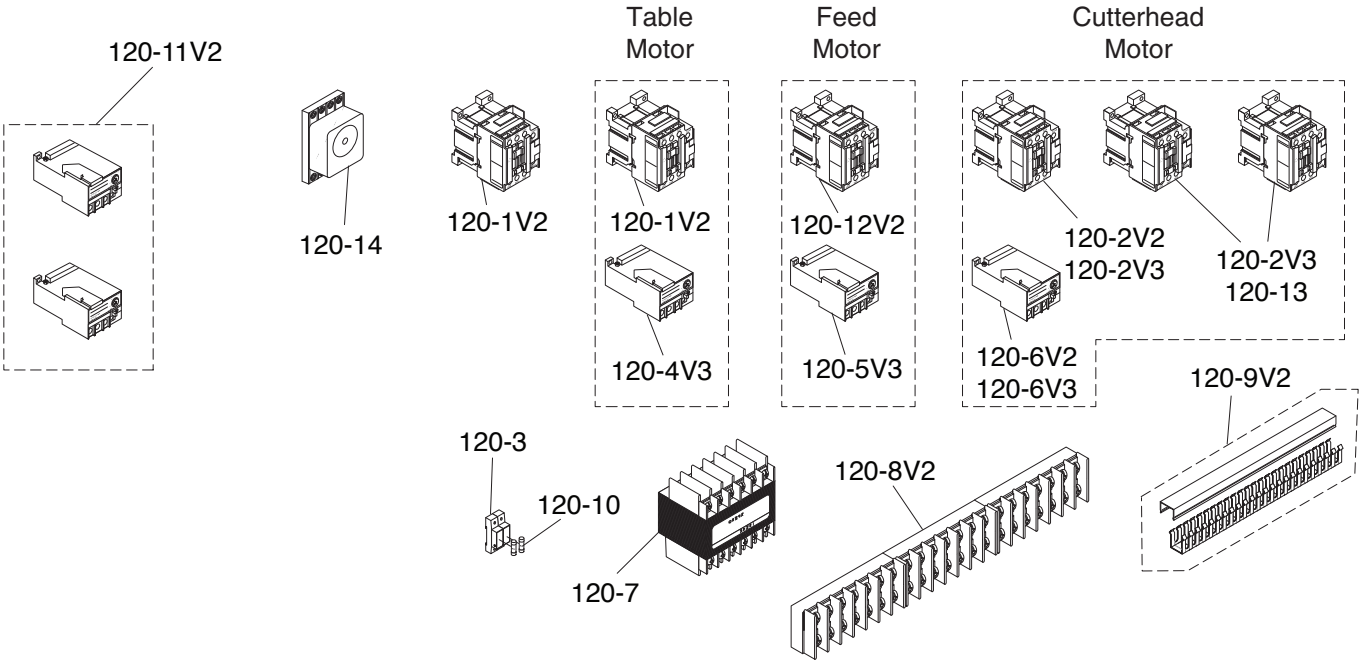

REF	PART #	DESCRIPTION	APPLICABLE TO
120-1V2	P97400120-1V2	CONTACTOR TECO CU-11 3A1B V2.05.08	ALL MODELS
120-2V2	P97400120-2V2	CONTACTOR TECO CU-16 3A1A V2.07.12	G9740, G9740Z
120-2V3	P97410120-2V3	CONTACTOR TECO CU-18 V3.07.12	G9741, G9961
120-3	P97400120-3	FUSE HOLDER	ALL MODELS
120-4V3	P97400120-4V3	OL RELAY TECO RHU-10 1.8-2.5A V3.01.11	ALL MODELS
120-5V3	P97400120-5V3	OL RELAY TECU RHU-10 2.9-4.0A V3.01.11	ALL MODELS
120-6V2	P97400120-6V2	OL RELAY TECO RHU-10 11.3-16A V2.07.12	G9740, G9740Z
120-6V3	P97410120-6V3	OL RELAY TECO RHU-10 15-20A V3.07.12	G9741, G9961
120-7	P97400120-7	TRANSFORMER	ALL MODELS
120-8V2	P97400120-8V2	TERMINAL BAR 29-POST V2.07.12	ALL MODELS
120-9V2	P97400120-9V2	WIRING DUCT W/COVER V2.07.12	ALL MODELS
120-10	P97400120-10	FUSE 3A	ALL MODELS
120-11V2	P97400120-11V2	440V CONVERSION KIT	G9740, G9740Z
120-11V2	P97410120-11V2	440V CONVERSION KIT	G9741, G9961
120-12V2	P97400120-12V2	CONTACTOR TECO CU-11 3A1A V2.05.08	ALL MODELS
120-13	P97400120-13	CONTACTOR TECO CU-16 3A1B	G9740, G9740Z
120-14	P97400120-14	STAR-DELTA TIMER TRD-N	ALL MODELS

Converting to 440V Operation

The Model G9740/G9740Z/G9741/G9961 can be converted to 440V operation. This job consists of: 1) disconnecting the planer from the power source, 2) changing the connections on the voltage transformer, 3) changing the motor overload relays, and 4) rewiring all of the motors for 440V operation.

Call Grizzly customer service at (800) 523-4777 to purchase the appropriate 440V Conversion Kit listed below.

Model	**Part Number**
G9740 or G9740Z	P97400120-11V2
G9741 or G9961	P97410120-11V2

This procedure takes moderate electrical skill and the conversion job must be inspected by an electrician or qualified service personnel before the planer is connected to power.

To convert the planer for 440V operation:

1. DISCONNECT PLANER FROM POWER!

2. Open electrical panel and locate voltage transformer.

3. On transformer, remove wire that is connected to 220V terminal and connect that wire to 440 terminal (refer to the **Electrical Cabinet Wiring** diagram on **Page 4** for a detailed illustration).

4. Remove *table* motor overload relay and replace it with following relay that is included in 440V Conversion Kit:

—TECO RHU-10 0.9–1.3A
Set overload relay dial to 1A.

5. Replace *feed* motor overload relay with the one removed in **Step 4**.

—TECO RHU-10 1.8–2.5A
Set overload relay dial to 2A.

6. Remove *cutterhead* motor overload relay and replace it with appropriate relay listed below that is included in 440V Conversion Kit:

—*Model G9740 or G9740Z*
TECO RHU-10 5.5–7.5A
Set overload relay dial to 7A.

—*Model G9741 or G9961*
TECO RHU-10 7.2–10A
Set overload relay dial to 9A.

7. Change wiring on all three motors to match diagrams inside of motor terminal block covers.

Note: *Refer to **Motor Wiring** diagrams on **Page 5** for additional information.*

Electrical Cabinet Wiring

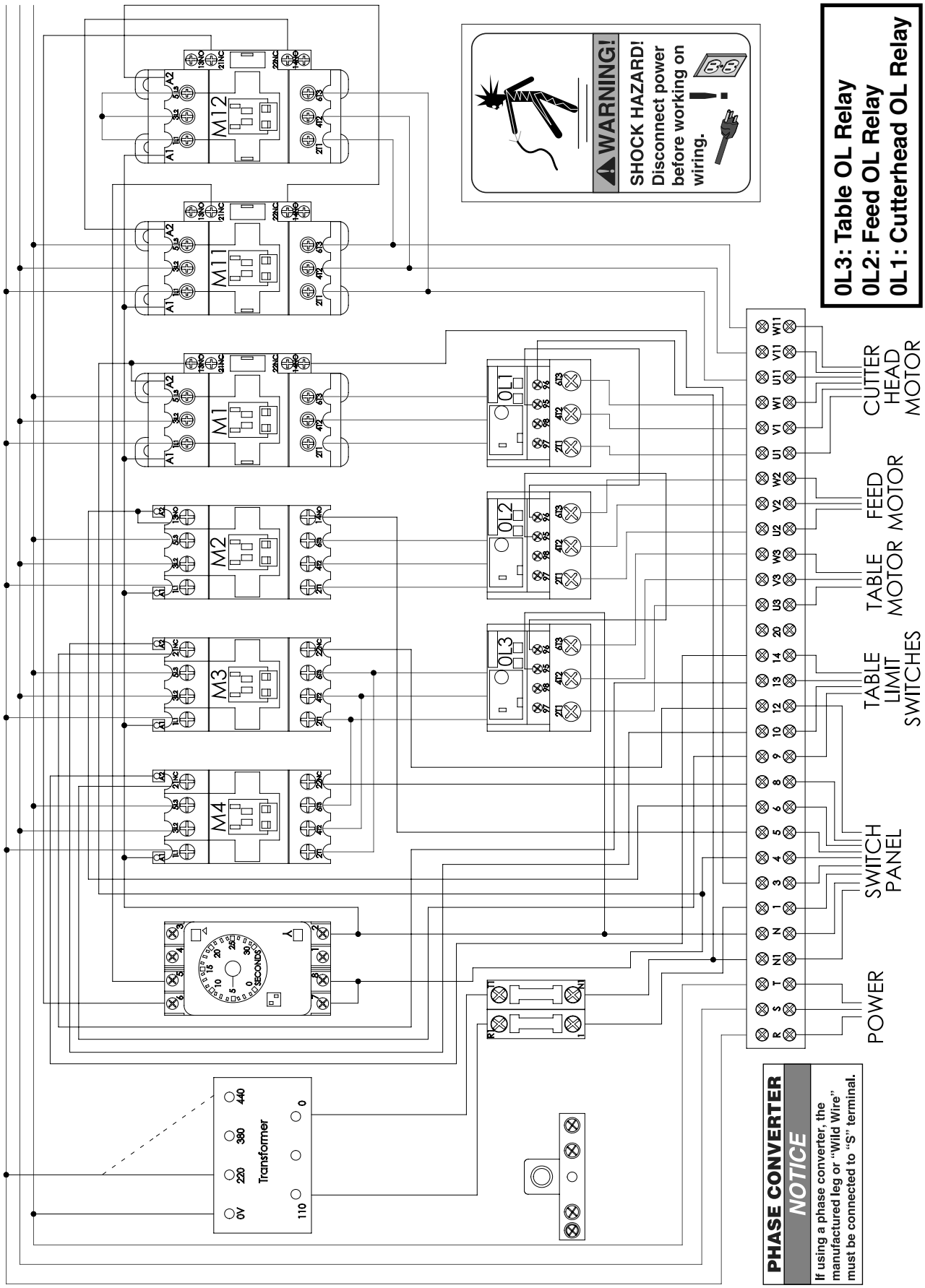

Table & Feed Motor Wiring

NOTICE

There are multiple tasks that need to be completed to convert this machine to 440V operation. If converting to 440V, refer to *Page 3* for detailed instructions.

Table Motor

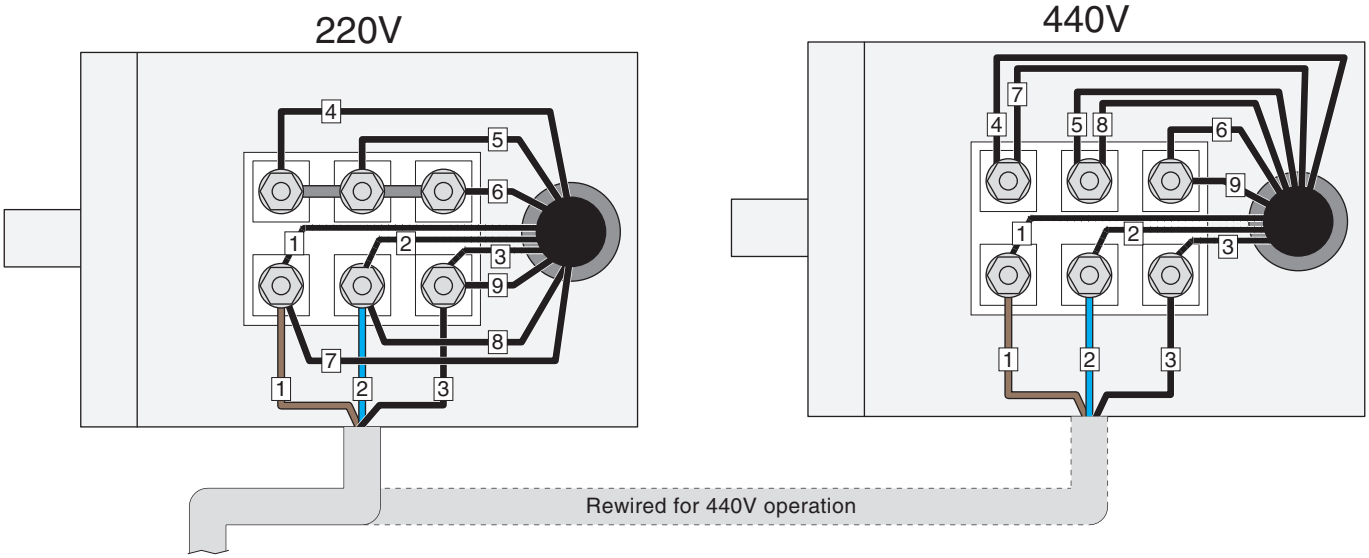

NOTICE

These motor wiring diagrams are current at the time of printing; however, always use the diagram on the inside of the junction box cover when rewiring your motor!

Feed Motor

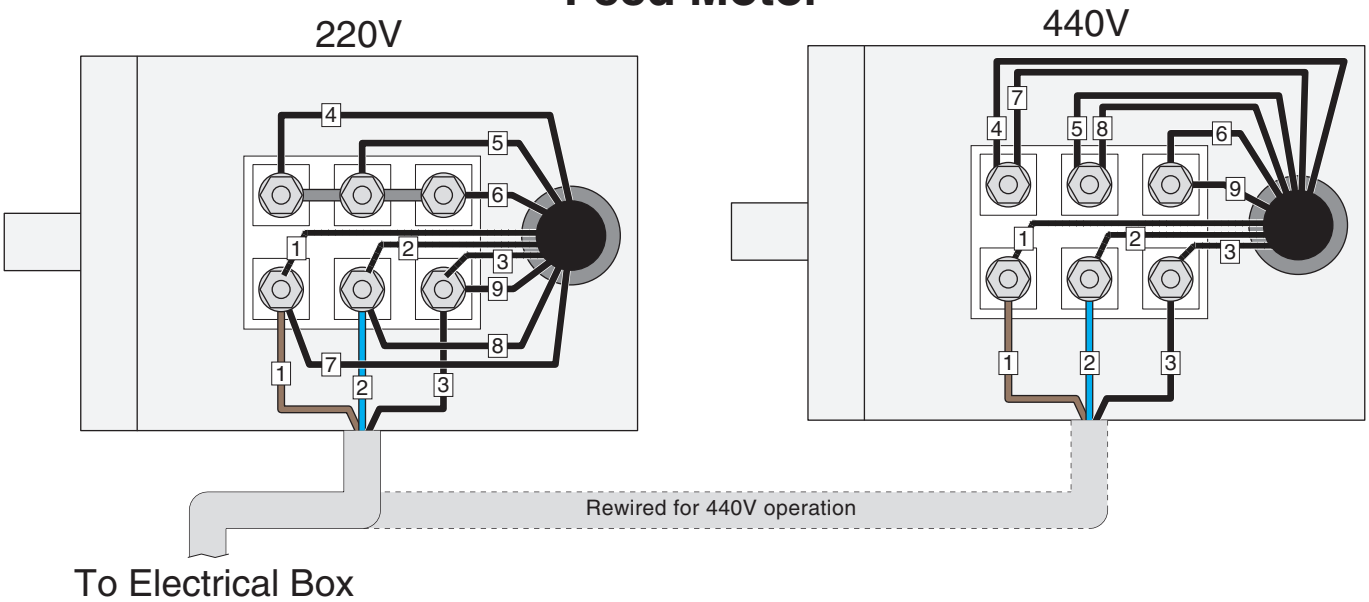

Cutterhead Motor Wiring

NOTICE

There are multiple tasks that need to be completed to convert this machine to 440V operation. If converting to 440V, refer to *Page 3* for detailed instructions.

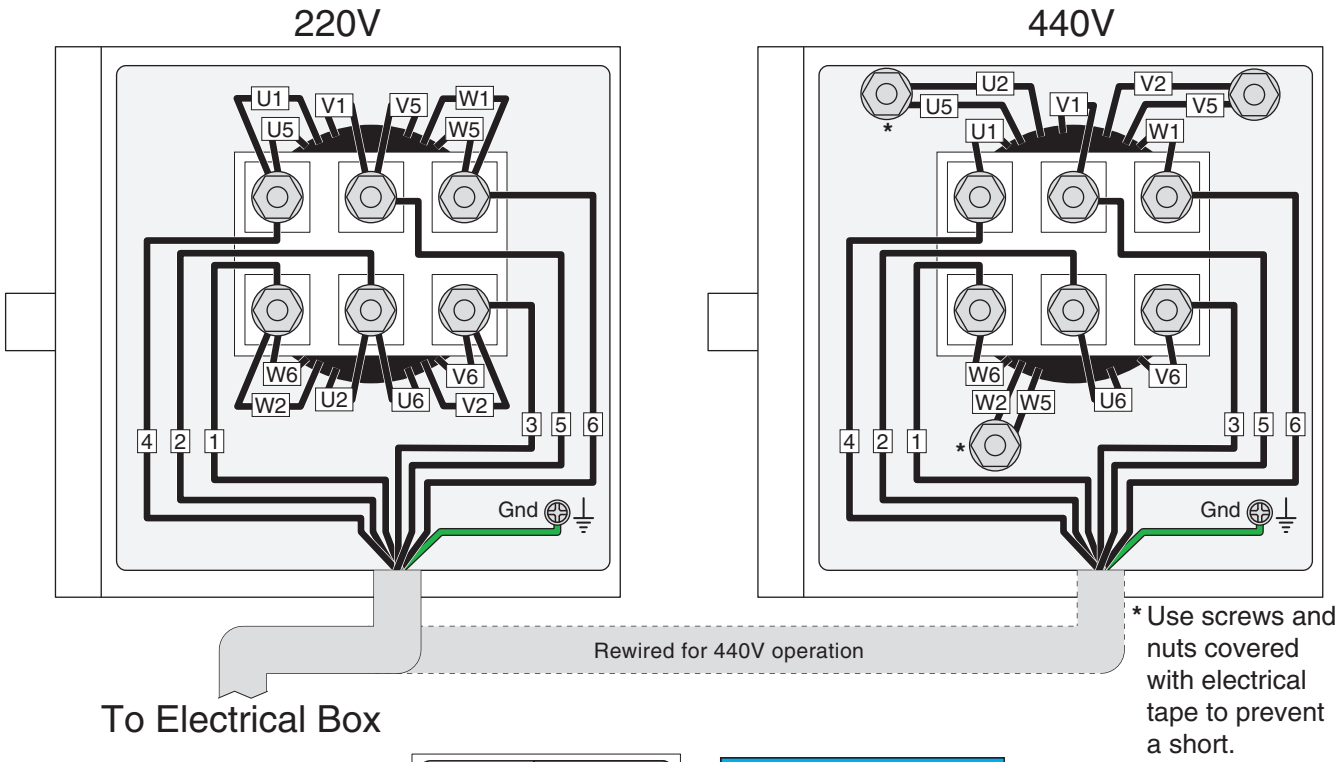

NOTICE

These motor wiring diagrams are current at the time of printing; however, always use the diagram on the inside of the junction box cover when rewiring your motor!

Control Panel & Limit Switch Wiring

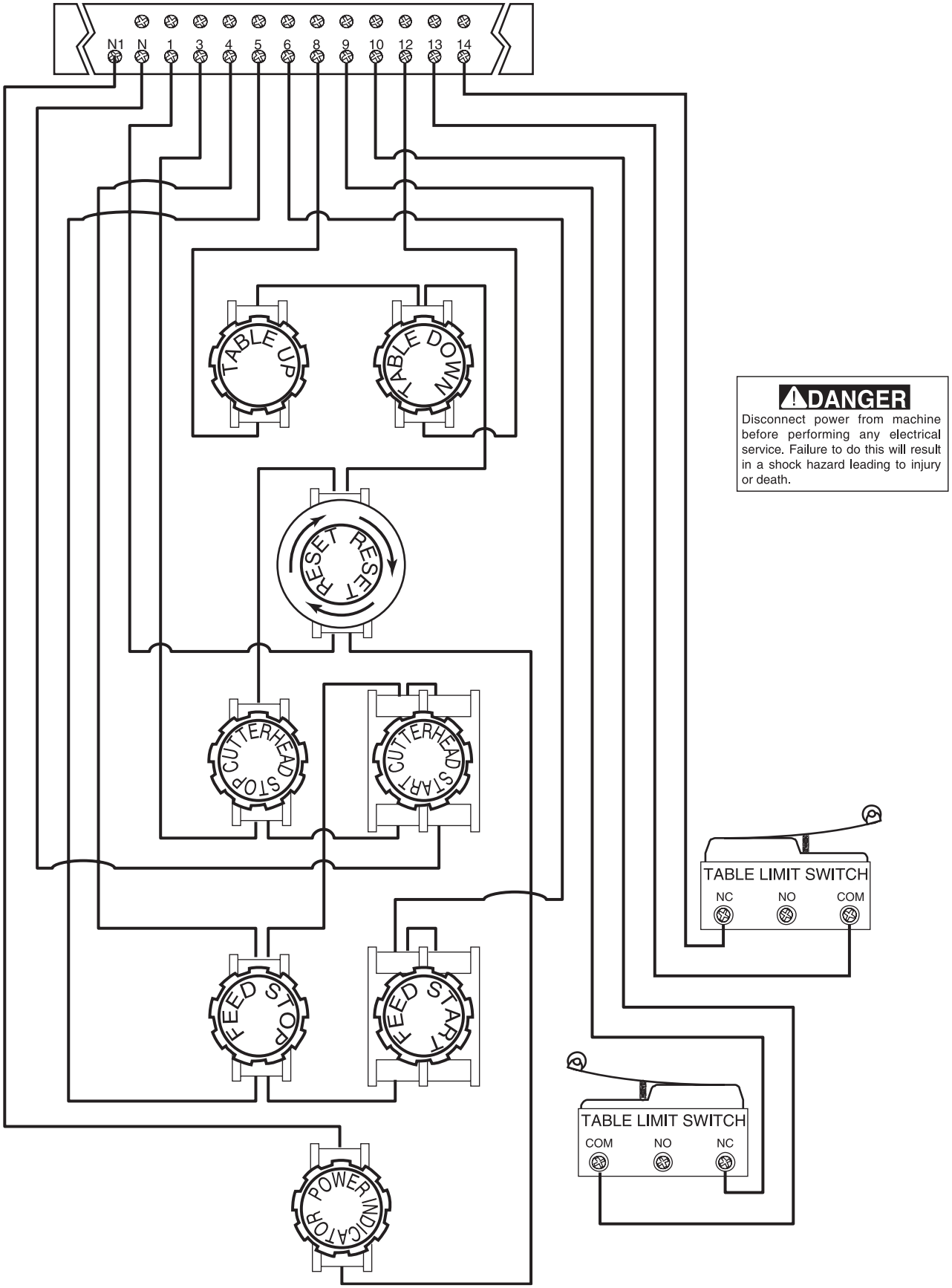

⚠DANGER

Disconnect power from machine before performing any electrical service. Failure to do this will result in a shock hazard leading to injury or death.

Pressure Bar Assembly

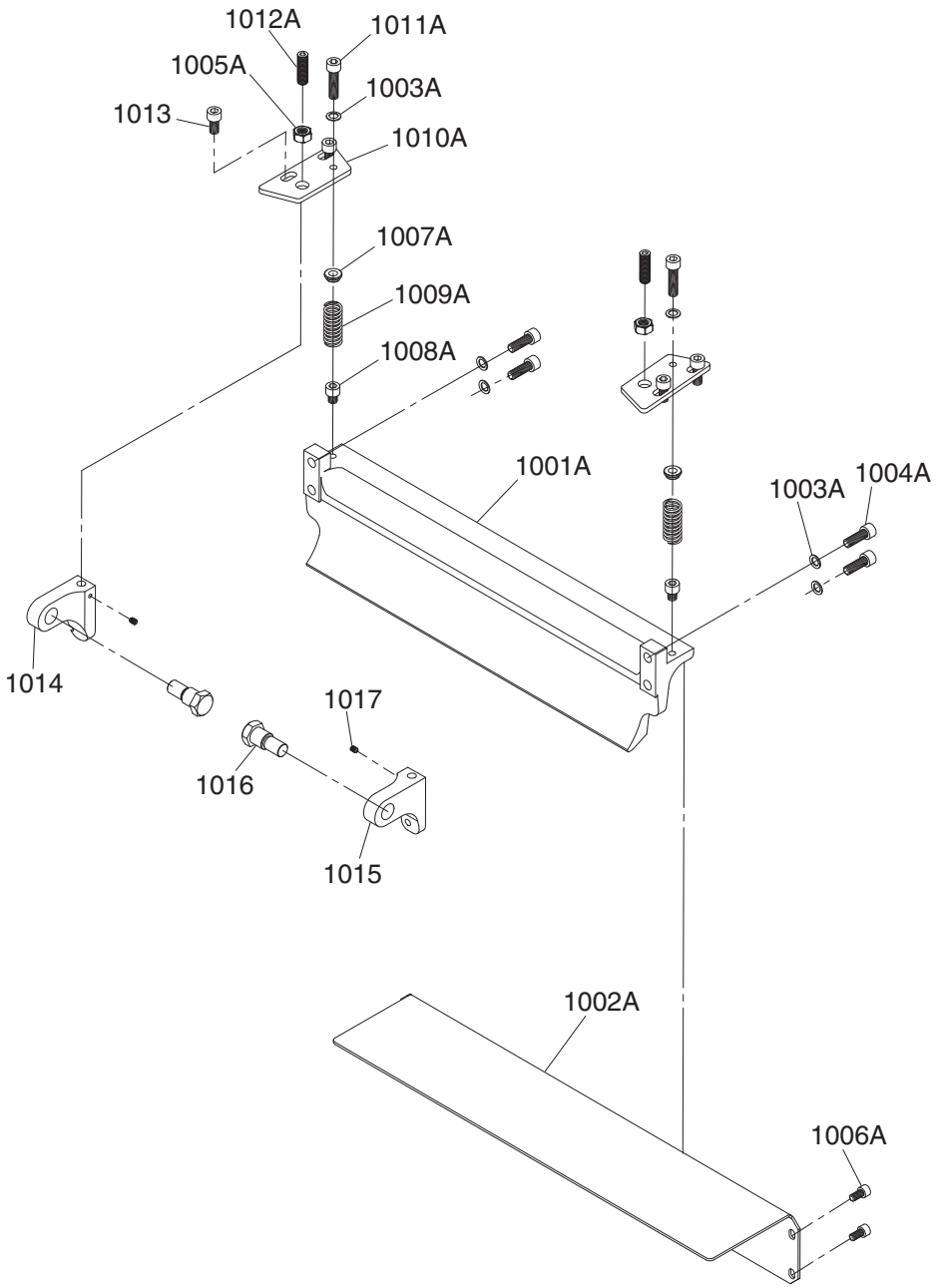

REF	PART #	DESCRIPTION
1001A	P97401001A	PRESSURE BAR (20")
1001A	P97411001A	PRESSURE BAR (24")
1002A	P97401002A	PROTECTION PLATE (20")
1002A	P97411002A	PROTECTION PLATE (24")
1003A	P97401003A	FLAT WASHER 10MM
1004A	P97401004A	CAP SCREW M10-1.5 X 30
1005A	P97401005A	HEX NUT M12-1.75
1006A	P97401006A	CAP SCREW M8-1.25 X 12
1007A	P97401007A	SPRING CAP
1008A	P97401008A	CAP SCREW M10-1.5 X 12

REF	PART #	DESCRIPTION
1009A	P97401009A	COMPRESSION SPRING 51MM
1010A	P97401010A	PRESSURE BAR BRACKET
1011A	P97401011A	CAP SCREW M10-1.5 X 40
1012A	P97401012A	SET SCREW M12-1.75 X 40
1013	P97401013A	CAP SCREW M10-1.5 X 25
1014	P97401014	RIGHT TRUNNION
1015	P97401015	LEFT TRUNNION
1016	P97401016	AXLE BOLT
1017	P97401017	SET SCREW M6-1 X 8

EXTREME-DUTY PLANERS

MODELS G9740/G9740Z/G9741/G9961/G9967/G9967Z

INSTRUCTION MANUAL

Model G9740 Shown

COPYRIGHT © SEPTEMBER, 2003 BY GRIZZLY INDUSTRIAL, INC. REVISED NOVEMBER, 2003.
WARNING: NO PORTION OF THIS MANUAL MAY BE REPRODUCED IN ANY SHAPE OR FORM WITHOUT THE WRITTEN APPROVAL OF GRIZZLY INDUSTRIAL, INC.
#3978 PRINTED IN TAIWAN

WARNING

Some dust created by power sanding, sawing, grinding, drilling, and other construction activities contains chemicals known to the State of California to cause cancer, birth defects or other reproductive harm. Some examples of these chemicals are:

- Lead from lead-based paints.
- Crystalline silica from bricks, cement, and other masonry products.
- Arsenic and chromium from chemically treated lumber.

Your risk from these exposures varies, depending on how often you do this type of work. To reduce your exposure to these chemicals: work in a well ventilated area, and work with approved safety equipment, such as those dust masks that are specially designed to filter out microscopic particles.

Table Of Contents

SECTION 1: SAFETY 2
Safety Instructions For Power Tools 2
Additional Safety Instructions For Planers 4
SECTION 2: GENERAL INFORMATION 5
SECTION 3: CIRCUIT REQUIREMENTS 6
G9967/G9967Z 6
G9740/G9740Z 6
G9741/G9961 7
Extension Cords 7
Grounding 7
Rewire to 440V 8
SECTION 4: MACHINE FEATURES 9
About this Section 9
SECTION 5: SET UP 10
About this Section 10
Unpacking 10
Piece Inventory 11
Hardware Recognition Chart 12
Clean Up 13
Site Considerations 13
SECTION 6: ASSEMBLY 14
Beginning Assembly 14
Dust Hood 14
Table Rollers 15
Test Run 16
SECTION 7: OPERATIONS 17
Operational Tips 17
Wood Characteristics 18
SECTION 8: MAINTENANCE 19
General 19
Cleaning 19
Table 19
Lubrication 19
V-Belt 20
Maintenance Log 21
SECTION 9: SERVICE ADJUSTMENTS 22
About Service 22
Adjustment Controls 22
Cutterhead Knives 23
Carbide Cutters 24
Table 26
Feed Rollers & Pressure Bar 29
Feed Roller Tension 31
Chip Deflector 31
SECTION 10: CLOSURE 32
G9740/G9740Z Machine Data Sheet 33
G9967/G9967Z Machine Data Sheet 34
G9741/G9961 Machine Data Sheet 35
G9740/G9740Z/G9967/G9967Z Parts Diagrams and List 36
G9967/G9967Z Wiring Diagrams 61
G9740/G9740Z Wiring Diagrams 64
G9741/G9961 Wiring Diagrams 67
Warranty and Returns 70

SECTION 1: SAFETY

⚠WARNING

For Your Own Safety Read Instruction Manual Before Operating This Equipment

The purpose of safety symbols is to attract your attention to possible hazardous conditions. This manual uses a series of symbols and signal words which are intended to convey the level of importance of the safety messages. The progression of symbols is described below. Remember that safety messages by themselves do not eliminate danger and are not a substitute for proper accident prevention measures.

⚠DANGER **Indicates an imminently hazardous situation which, if not avoided, WILL result in death or serious injury.**

⚠WARNING **Indicates a potentially hazardous situation which, if not avoided, COULD result in death or serious injury.**

⚠CAUTION **Indicates a potentially hazardous situation which, if not avoided, MAY result in minor or moderate injury. It may also be used to alert against unsafe practices.**

NOTICE **This symbol is used to alert the user to useful information about proper operation of the equipment.**

⚠WARNING

Safety Instructions For Power Tools

1. **KEEP GUARDS IN PLACE** and in working order.
2. **REMOVE ADJUSTING KEYS AND WRENCHES**. Form habit of checking to see that keys and adjusting wrenches are removed from tool before turning on.
3. **KEEP WORK AREA CLEAN**. Cluttered areas and benches invite accidents.
4. **NEVER USE IN DANGEROUS ENVIRONMENT**. Do not use power tools in damp or wet locations, or where any flammable or noxious fumes may exist. Keep work area well lighted.
5. **KEEP CHILDREN AND VISITORS AWAY**. All children and visitors should be kept at a safe distance from work area.
6. **MAKE WORKSHOP CHILD PROOF** with padlocks, master switches, or by removing starter keys.
7. **NEVER FORCE TOOL**. It will do the job better and safer at the rate for which it was designed.
8. **USE RIGHT TOOL.** Do not force tool or attachment to do a job for which it was not designed.

⚠WARNING
Safety Instructions For Power Tools

9. **USE PROPER EXTENSION CORD**. Make sure your extension cord is in good condition. Conductor size should be in accordance with the chart below. The amperage rating should be listed on the motor or tool nameplate. An undersized cord will cause a drop in line voltage resulting in loss of power and overheating. Your extension cord must also contain a ground wire and plug pin. Always repair or replace extension cords if they become damaged.

Minimum Gauge for Extension Cords

AMP RATING	LENGTH		
	25ft	50ft	100ft
0-6	16	16	16
7-10	16	16	14
11-12	16	16	14
13-16	14	12	12
17-20	12	12	10
21-30	10	10	No

10. **WEAR PROPER APPAREL.** Do not wear loose clothing, gloves, neckties, rings, bracelets, or other jewelry which may get caught in moving parts. Non-slip footwear is recommended. Wear protective hair covering to contain long hair.

11. **ALWAYS USE SAFETY GLASSES.** Also use face or dust mask if cutting operation is dusty. Everyday eyeglasses only have impact resistant lenses, they are NOT safety glasses.

12. **SECURE WORK.** Use clamps or a vise to hold work when practical. It is safer than using your hand and frees both hands to operate tool.

13. **NEVER OVERREACH.** Keep proper footing and balance at all times.

14. **MAINTAIN TOOLS WITH CARE.** Keep tools sharp and clean for best and safest performance. Follow instructions for lubricating and changing accessories.

15. **DISCONNECT TOOLS** before servicing and changing accessories, such as blades, bits, cutters, and the like.

16. **REDUCE THE RISK OF UNINTENTIONAL STARTING.** Make sure switch is in *OFF* position before plugging in.

17. **USE RECOMMENDED ACCESSORIES.** Consult the owner's manual for recommended accessories. The use of improper accessories may cause risk of injury.

18. **CHECK DAMAGED PARTS.** Before further use of the tool, a guard or other part that is damaged should be carefully checked to determine that it will operate properly and perform its intended function. Check for alignment of moving parts, binding of moving parts, breakage of parts, mounting, and any other conditions that may affect its operation. A guard or other part that is damaged should be properly repaired or replaced.

19. **NEVER LEAVE TOOL RUNNING UNATTENDED. TURN POWER *OFF*.** Do not leave tool until it comes to a complete stop.

20. **NEVER USE UNDER THE INFLUENCE** of alcohol or drugs, or when tired.

21. **NEVER ALLOW UNSUPERVISED OR UNTRAINED PERSONNEL TO OPERATE THE MACHINE.** Make sure any instructions you give in regards to the operation of the machine are approved, correct, safe, and clearly understood.

⚠WARNING
Additional Safety Instructions For Planers

1. **READ THIS ENTIRE MANUAL BEFORE TURNING THE PLANER ON.**

2. **ENSURE THAT THE MACHINE IS *ON* FLAT, STABLE GROUND BEFORE USE.** Any "wobbles" must be corrected by shimming or blocking before operation.

3. **NEVER PLANE MATERIAL OTHER THAN WOOD WITH THIS MACHINE.**

4. **NEVER POSITION FINGERS OR THUMBS NEAR THE INFEED ROLLER.**

5. **ENSURE THAT THE PLANER IS PROPERLY ADJUSTED AND THAT THERE ARE NO LOOSE PARTS BEFORE OPERATING.**

6. **PLANE IN THE SAME DIRECTION AS THE GRAIN OF THE WOOD STOCK.**

7. **ALWAYS STAND TO THE SIDE OF THE PLANER WHILE FEEDING THE WORKPIECE.**

8. **DO NOT LOOK INTO THE MOUTH OF THE PLANER DURING OPERATION!**

9. **ALWAYS PROVIDE ADEQUATE INFEED AND OUTFEED SPACE WHEN OPERATING THE PLANER.** Always support long pieces of stock on both sides of the planer.

10. **DO NOT REMOVE MORE THAN ¼" FROM THE SURFACE OF THE WOOD STOCK IN A SINGLE PASS.**

11. **INSPECT YOUR STOCK BEFORE PLANING.** Never plane stock with nails, staples or other foreign objects which may be embedded in the surface. Always properly prepare workpieces before running them through the planer. Do not plane lumber with loose knots or knots that may become loose during planing.

12. **DO NOT ATTEMPT TO REMOVE JAMS UNTIL POWER IS DISCONNECTED** and all moving parts have come to a complete stop.

13. **DO NOT PLANE WORKPIECES LESS THAN 12" LONG AND ¼" THICK.**

14. **DO NOT OPERATE PLANER WITH DULL OR DAMAGED KNIVES.**

15. **ALWAYS UNPLUG THE PLANER WHENEVER MAKING ANY ADJUSTMENTS** that would bring your hands near the cutterhead.

16. **IF AT ANY TIME YOU ARE EXPERIENCING DIFFICULTIES PERFORMING THE INTENDED OPERATION, STOP USING THE PLANER!** Then contact our service department or ask a qualified expert how the operation should be performed.

⚠WARNING

Like all power tools, there is danger associated with planers. Accidents are frequently caused by lack of familiarity or failure to pay attention. Use this tool with respect and caution to lessen the possibility of operator injury. If normal safety precautions are overlooked or ignored, serious personal injury may occur.

⚠CAUTION

No list of safety guidelines can be complete. Every shop environment is different. Always consider safety first, as it applies to your individual working conditions. Use this and other machinery with caution and respect. Failure to do so could result in serious personal injury, damage to equipment or poor work results.

SECTION 2: GENERAL INFORMATION

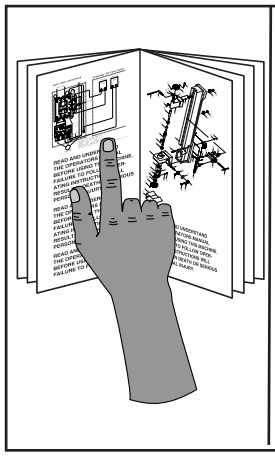

⚠WARNING

Read the manual before assembly and operation. Become familiar with the machine and its operation before beginning any work. Serious personal injury may result if safety or operational information is not understood or followed.

Grizzly Industrial, Inc. is proud to offer the Extreme Duty Planers. These planers are part of Grizzly's growing family of fine woodworking machinery. When used according to the guidelines stated in this manual, you can expect years of trouble-free, enjoyable operation.

The Extreme Duty Planers are the same machine with the exception of the motor size, electrical phase and cutterhead differences. Please refer to the chart below to distinguish planer differences.

These planers are intended for heavy-duty professional use and are capable of operating at 5000 RPM with a 20-40 FPM feed rate.

We are pleased to provide this manual with the Extreme Duty Planers. It was written to guide you through assembly, review safety considerations, and cover general operating procedures. It represents our latest effort to produce the best documentation possible.

If you have any criticisms that you feel we should address in our next printing, please write to us at the address below:

Grizzly Industrial, Inc.
% Technical Documentation
P.O. Box 2069
Bellingham, WA 98227

Most important, we stand behind our machines. We have an excellent Service Department at your disposal should the need arise. If you have any service questions or parts requests, please call or write to us at the location listed below.

Grizzly Industrial, Inc.
1203 Lycoming Mall Circle
Muncy, PA 17756
Phone:(570) 546-9663
Fax:(800) 438-5901
E-Mail: techsupport@grizzly.com
Web Site: http://www.grizzly.com

The specifications, drawings, and photographs illustrated in this manual represent the machine as supplied when the manual was prepared. However, owing to Grizzly's policy of continuous improvement, changes may be made at any time with no obligation on the part of Grizzly. For your convenience, we always keep current Grizzly manuals available on our website at www.grizzly.com. Any updates to your machine will be reflected in these manuals as soon as they are complete.

Description	G9967	G9967Z	G9740	G9740Z	G9741	G9961
Motor	5 HP	5 HP	7½ HP	7½ HP	10 HP	10 HP
Phase	1-Phase	1-Phase	3-Phase	3-Phase	3-Phase	3-Phase
Cutterhead	4 Knife	Spiral	4 Knife	Spiral	4 Knife	Spiral

SECTION 3: CIRCUIT REQUIREMENTS

G9967/G9967Z

The Model G9967/G9967Z Planer is prewired with a 5 HP 220V single-phase motor. Please use the following specs when preparing your shop for the machine, and always have the wiring inspected by a licensed electrician before operating your machine.

Total Amperage Draw ..... 39 amp
Recommended Circuit Breaker..... 40 amp
Recommended Plug and Receptacle 6-50
Cord 2-pole, 3-wire

The planer must be connected to a dedicated circuit. It should not share a circuit with any other machine. If frequent circuit failure occurs when using the planer, contact our Service Department.

In addition, you may also "hard-wire" the planer directly to your panel, provided you place a disconnect near the machine. Check the electrical codes in your area for specifics on wiring requirements.

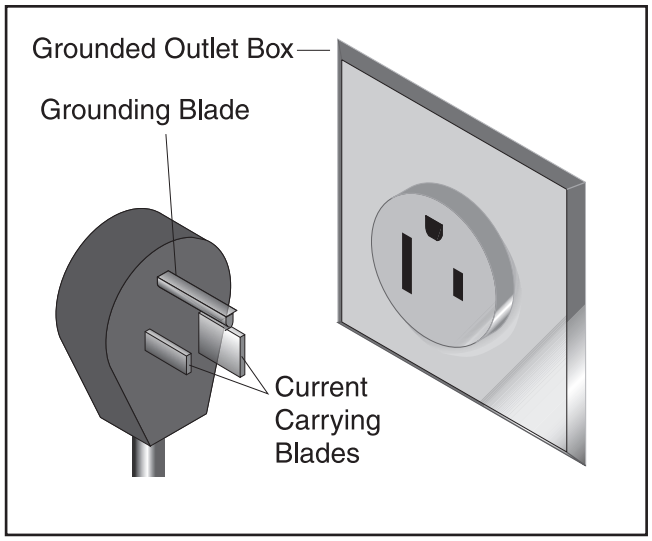

Figure 1. Typical 6-50 plug and receptacle.

G9740/G9740Z

The Model G9740/G9740Z is prewired with a 7½ HP 220V 3-phase motor, which may be rewired to 440V. Please use the following specs preparing your shop for the machine, and always have the wiring inspected by licensed electrician before operating your machine.

Total Amperage Draw at 220V..... 26 amp
Circuit Breaker at 220V..... 30 amp
Plug and Receptacle at 220V L15-30
Total Amperage Draw at 440V..... 13 amp
Circuit Breaker at 440V..... 15 amp
Plug and Receptacle at 440V L16-20
Cord 3-pole, 4-wire

The planer must be connected to a dedicated circuit. It should not share a circuit with any other machine. If frequent circuit failure occurs when using the planer, contact our Service Department.

In addition, you may also "hard-wire" the planer directly to your panel, provided you place a disconnect near the machine. Check the electrical codes in your area for specifics on wiring requirements.

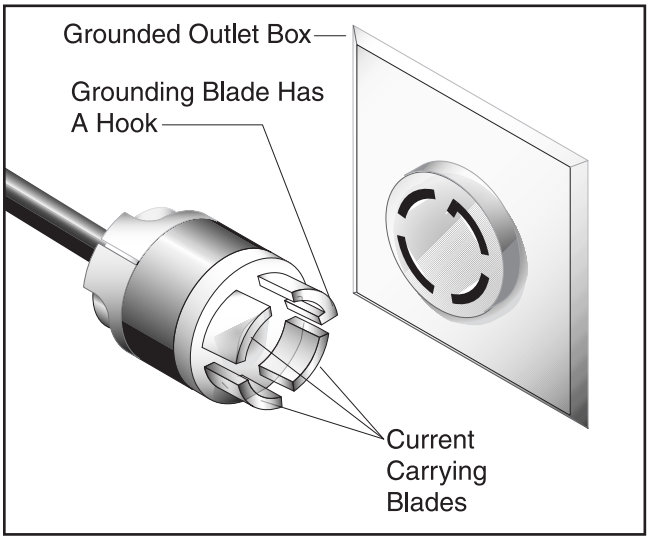

Figure 2. Typical L15-30 plug and receptacle.

G9741/G9961

The Model G9740/G9740Z Planer is prewired with a 10 HP 3-phase motor, which may be rewired to 440V. Please use the following specs preparing your shop for the machine, and always have the wiring inspected by licensed electrician before operating your machine.

Total Amperage Draw at 220V..... 32 amp
Circuit Breaker at 220V..... 35 amp
Plug and Receptacle at 220V 15-50
Total Amperage Draw at 440V..... 15 amp
Circuit Breaker at 440V..... 20 amp
Plug and Receptacle at 440V L16-20
Cord 3-pole, 4-wire

The planer must be connected to a dedicated circuit. It should not share a circuit with any other machine. If frequent circuit failure occurs when using the planer, contact our service department.

In addition, you may also “hard-wire” the planer directly to your panel, provided you place a locking power disconnect near the machine. Check the electrical codes in your area for specifics on wiring requirements.

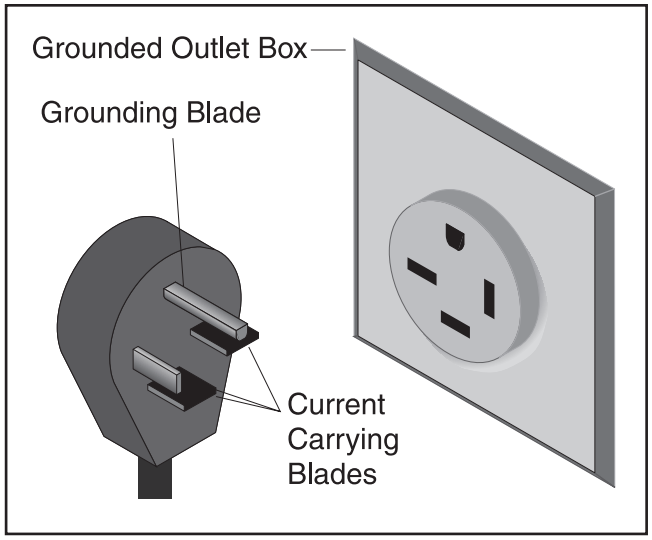

Figure 3. Typical 15-50 plug and receptacle.

Grounding

In the event of an electrical short, grounding reduces the risk of electric shock by providing a path of least resistance to disperse electric current. This tool is equipped with an electric cord that has an equipment-grounding conductor which must be properly connected to a grounding plug. The plug must be plugged into a matching outlet that is properly installed and grounded in accordance with all local codes and ordinances. Improper connections of the electrical-grounding conductor can result in the risk of electric shock.

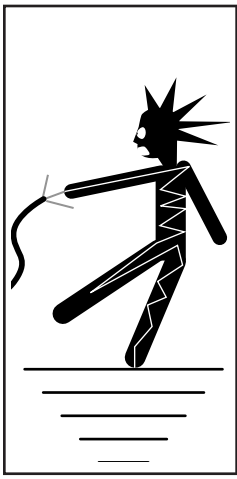

WARNING

This equipment must be grounded. Verify that any existing electrical outlet and circuit you intend to plug into is actually grounded. Under no circumstances should the grounding pin from any three-pronged plug be removed. Serious injury may occur.

Extension Cords

We do not recommend the use of extension cords on 220V equipment. It is much better to arrange the placement of your equipment and the installed wiring to eliminate the need for extension cords.

Rewire to 440V

The Model G9740/G9740Z/G9741/G9961 can be rewired from 220V to 440V. Before rewiring, purchase the Grizzly 440V conversion kit (#P97400120-11).

Please Note—*The Model G9967/G9967Z cannot be rewired to 440V.*

The 440V wiring conversion procedure requires rewiring the transformer, installing new overload relays for the feed and elevation motors, setting all the overload relay dials to the correct position, and rewiring the motors.

To rewire the planer:

1. Open the control panel so that you have access to the electronic components inside.

2. On the transformer, move the wire that is connected to the “220” terminal to the “440” terminal.

3. Remove the old feed motor relay and install the RHN-18 (1.7-2.5A) relay in its place.

4. Set the dial on the new relay to 2A.

5. Remove the old elevation motor relay and install the RHN-18 (1-1.7A) relay in its place.

6. Set the dial to 1A.

7. At the main motor overload relay (5-60A), set dial to the following amperage, depending on your machine:
   - G9740/G9740Z 10A
   - G9741/G9961 ..... 13A

8. Change the wiring on all three motor terminal boxes to match the diagram on the inside of the terminal box cap (use the wiring diagram pages in the “Reference Info” section at the back of this manual if the diagram is missing from the inside of the cap).

SECTION 4: MACHINE FEATURES

About this Section

Familiarize yourself with the planer controls before turning the machine on. **Figures 18** and **19** point out these controls.

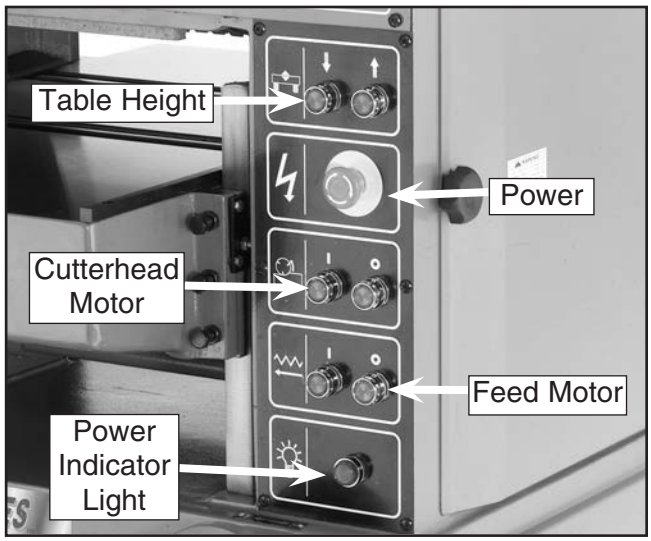

Figure 18. Control panel.

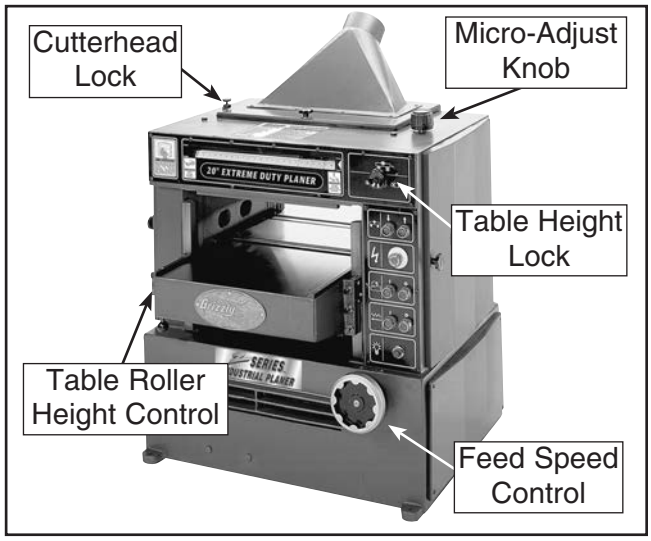

Figure 19. Adjustment controls.

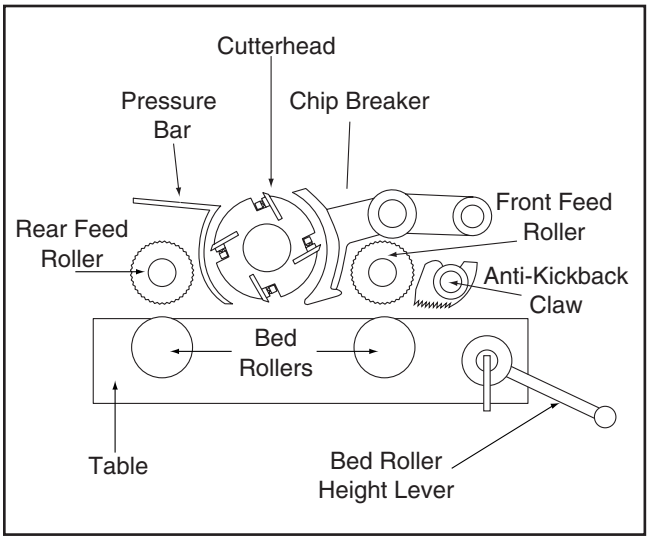

Figure 6. Planer components.

SECTION 5: SET UP

About this Section

The purpose of this section is to guide you through the required steps to get your machine out of its crate and into operating condition.

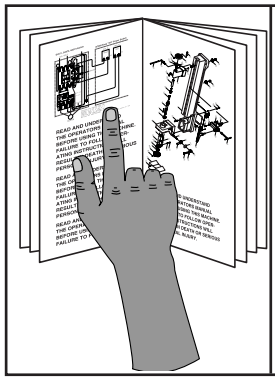

⚠WARNING

This machine presents serious injury hazards to untrained users. Read through this entire manual to become familiar with the controls and operations before starting the machine!

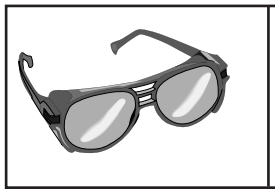

⚠WARNING

Wear safety glasses during the entire set up process!

Unpacking

Your machine was carefully packed when it left our warehouse. If you discover the machine is damaged after you have signed for delivery, *please immediately call our Customer Service at (570) 546-9663 for advice.*

Save the containers and all packing materials for possible inspection by the carrier or its agent. Without the packing materials, filing a freight claim can be difficult. *If you need assistance determining whether you need to file a freight claim, or with the procedure to file one, please contact our Customer Service at (570) 546-9663.*

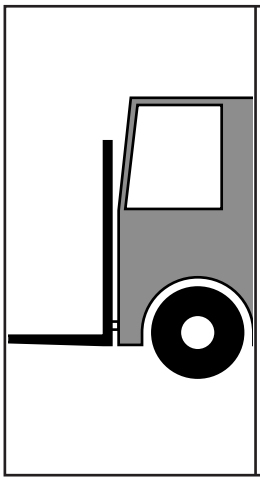

⚠WARNING

These Planers are heavy machines, up to 1853 lbs. shipping weight. DO NOT over-exert yourself while unpacking or moving your machine—use power equipment to move the machine. Serious personal injury may occur if safe moving methods are not followed.

When you are completely satisfied with the condition of your shipment, you should inventory its parts.

Piece Inventory

After all the parts have been removed from the carton, you should have:

G9740/G9741/G9967 (4-Knife Cutterheads)

Part	Qty
• Planer Unit	1
• Dust Hood	1
• Combo Wrench 11x13	1
• Combo Wrench 12x14	1
• Combo Wrench 17x19	1
• Hex Wrench 5mm	1
• Knife Setting Jig	1

G9740Z/G9961/G9967Z (Spiral Cutterheads)

Part	Qty
• Planer Unit	1
• Dust Hood	1
• T-20 Torx® Driver	1
• Misc. Bag of T-20 Driver Bits	1
• Misc. Bag of T-20 Flat Screws	1
• Pressure Gauge	1
• Reducing Valve	1
• Bracket	1
• Steel Rod (Handle)	1
• Reversible Air Screwdriver	1
• Phillips Bits	2
• Air Coupler	1
• Replacement Carbide Inserts	10

In the event that any nonproprietary parts are missing (e.g. a nut or a washer), we would be glad to replace them, or for the sake of expediency, replacements can be obtained at your local hardware store.

Hardware Recognition Chart

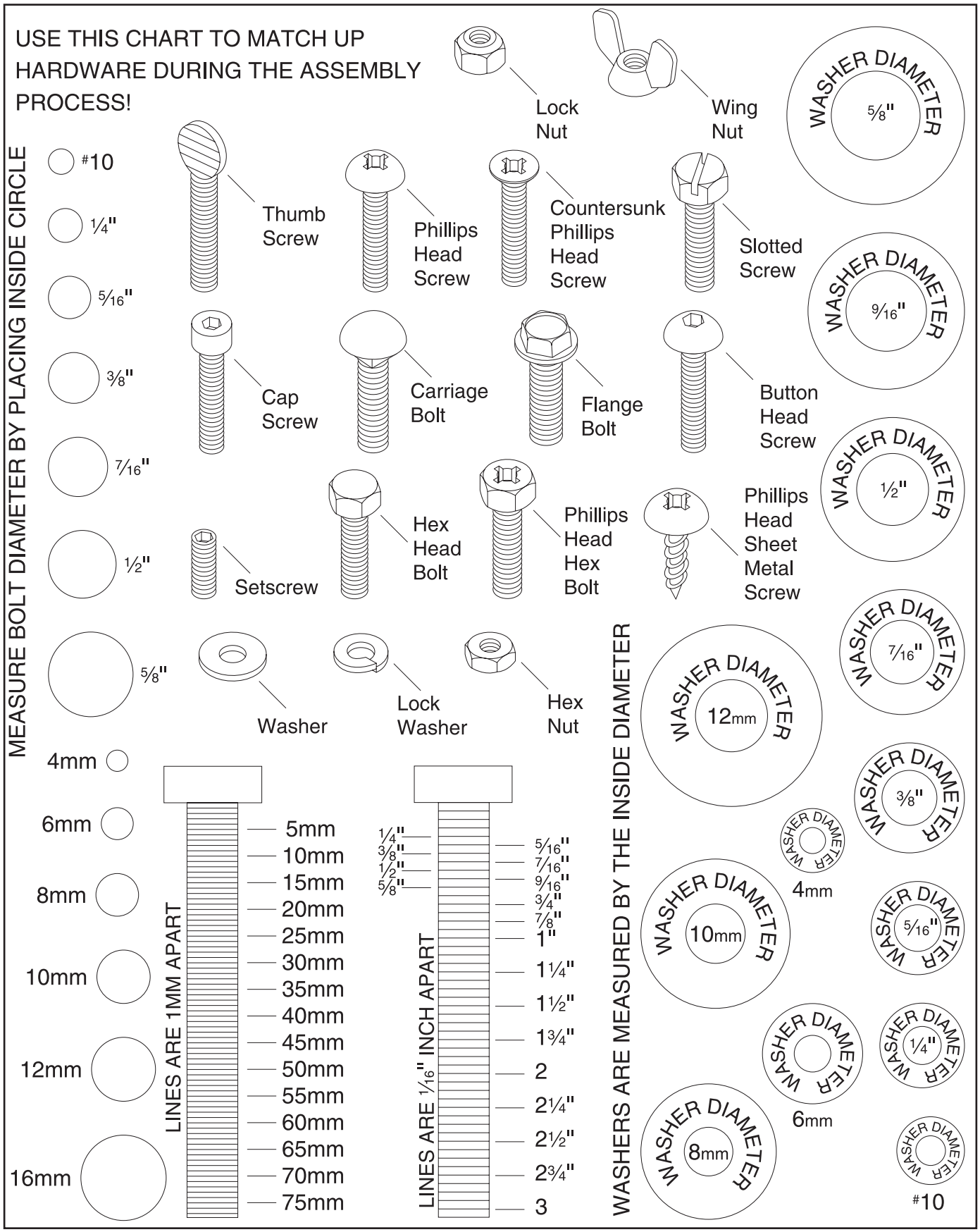

Clean Up

The unpainted surfaces are coated with a waxy oil to protect them from corrosion during shipment. Remove this protective coating with a solvent cleaner or citrus-based degreaser such as Grizzly's G7895 Degreaser. To clean thoroughly, some parts may need to be removed. **For optimum performance from your machine, make sure you clean all moving parts or sliding contact surfaces that are coated.** Avoid chlorine-based solvents as they may damage painted surfaces should they come in contact. Always follow the manufacturer's instructions when using any type of cleaning product.

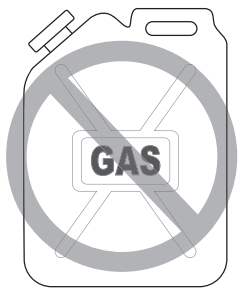

WARNING

Do not use gasoline or other petroleum-based solvents to clean with. They have low flash points which make them extremely flammable. A risk of explosion and burning exists if these products are used.

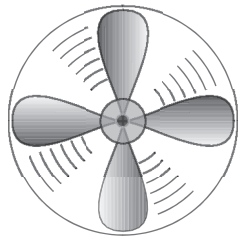

CAUTION

Many of the solvents commonly used to clean machinery can be toxic when inhaled or ingested. Always work in well-ventilated areas far from potential ignition sources when dealing with solvents. Use care when disposing of waste rags and towels to be sure they do not create fire or environmental hazards.

Site Considerations

FLOOR LOAD

Your Extreme Duty Planer represents a very large weight load in a moderate sized footprint. Most commercial shop floors will be adequate for the weight of the planer. Some floors may require additional support. Contact an architect or structural engineer if you have any question about the ability of your floor to handle the weight.

WORKING CLEARANCES

Working clearances can be thought of as the distances between machines and obstacles that allow safe operation of every machine without limitation. Consider existing and anticipated machine needs, size of material to be processed through each machine, and space for auxiliary stands and/or work tables. Also consider the relative position of each machine to one another for efficient material handling. Be sure to allow yourself sufficient room to safely run your machines in any foreseeable operation.

LIGHTING AND OUTLETS

Lighting should be bright enough to eliminate shadow and prevent eye strain. Electrical circuits should be dedicated or large enough to handle combined motor amp loads. Outlets should be located near each machine so power or extension cords are not obstructing high-traffic areas. Be sure to observe local electrical codes for proper installation of new lighting, outlets or circuits.

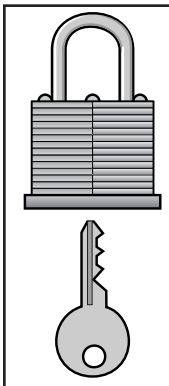

CAUTION

Make your shop "child safe." Ensure that your workplace is inaccessible to children by closing and locking all entrances when you are away. Never allow visitors in your shop when assembling, adjusting or operating equipment.

SECTION 6: ASSEMBLY

Beginning Assembly

Most of your Extreme Duty Planer has been assembled at the factory, but some parts must be assembled or installed after delivery. We have organized the assembly process into steps. Please follow along in the order presented in this section.

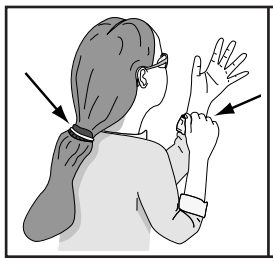

⚠WARNING

Keep loose clothing out of the way of machinery and keep hair pulled back.

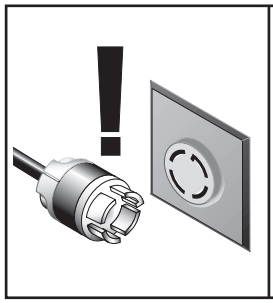

⚠WARNING

Disconnect power to the machine when performing any maintenance or assembly. Failure to do this may result in serious personal injury.

⚠WARNING

Wear safety glasses during the entire assembly process. Failure to comply may result in serious personal injury.

⚠CAUTION

Planer knives are dangerously sharp! Use extreme caution when working near cutting surfaces. Failure to exercise care while working near knives could result in severe injury.

Dust Hood

A dust hood with a 6" dust port comes with the planer for dust collection purposes. Install the dust hood with M6-1.0 x 10 screws. The dust hood should look like **Figure 4** when installed.

Figure 4. Dust hood installed.

Table Rollers

The height of the table rollers will vary, depending on the type of material you intend to plane. When planing rough stock, you will need to set the rollers high to keep the lumber from dragging along the table. Milled lumber should be planed with the rollers set lower.

To adjust the table rollers correctly:

1. Loosen the lock on the adjustment lever shown in **Figure 17**. Pull the lever up to raise the table rollers.

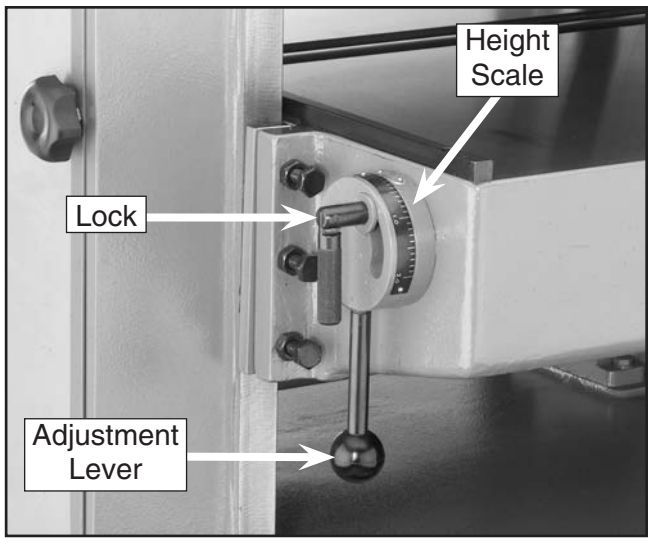

Figure 17. Roller height adjustment controls.

2. Determine the appropriate height for the type of stock you are using.

   The scale at the base of the adjustment lever is numbered “0”, “1” and “2”. These numbers represent how many millimeters the top of the rollers are above the surface of the table.

   Since 1mm = .03937", figure that each notch on the scale is approximately .004". The ideal tolerance for the height of the table rollers is between .002"-.016".

   Note—If the table rollers are too high, snipe or chipping may occur at the ends of the workpiece. Only use the higher settings for rough cut lumber. If you are unsure about which height to use, experiment on scrap lumber by using the trial and error method. Always start at the smaller tolerances and work up.

3. Pull the adjustment lever up to the appropriate scale marks. Secure the adjustment lever by tightening the lock.

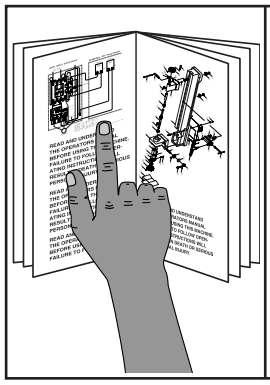

⚠WARNING

Read the entire manual before making any cuts with your planer. Serious personal injury may result if safety or operational information is not understood or followed.

Test Run

Once assembly is complete and adjustments are done to your satisfaction, you are ready to start the machine.

Turn on the power supply at the main panel. Press the *START* button. Make sure your finger is poised on the *STOP* button, just in case there is a problem. The planer should run smoothly with little or no vibration or rubbing noises. Strange or unnatural noises should be investigated and corrected before operating the machine further.

Run the planer for a short time to ensure that the moving parts are working properly with no excessive vibration. If any problem develops, correct it before attempting to use the machine.

If you cannot locate the source of unusual noises or cannot fix any problems that arise, immediately contact our Service Department at (570) 546-9663 for help.

SECTION 7: OPERATIONS

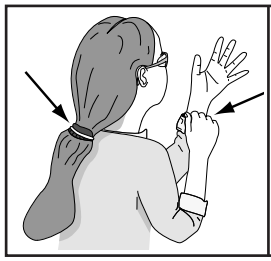

⚠WARNING

Keep loose clothing out of the way of machinery and keep hair pulled back.

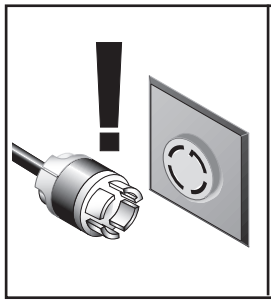

⚠WARNING

Disconnect power to the machine when performing any adjustments or maintenance. Failure to do this may result in serious personal injury.

⚠WARNING

Wear safety glasses during all operations on the planer. Failure to comply may result in serious personal injury.

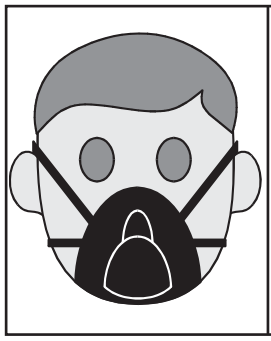

⚠CAUTION

Always wear a dust mask when operating the planer. Using this machine produces sawdust which may cause allergic reactions or respiratory problems.

NOTICE

If you are not familiar with how to properly use a planer. WE STRONGLY RECOMMEND that you read books, trade magazines, or get formal training.

Operational Tips

- Inspect lumber for defects, warping, cupping, twisting, and foreign objects (nails, staples, imbedded gravel, etc.). If you have any question about the quality of your lumber, do not use it. Remember, wood stacked on a concrete floor can have small pieces of stone or concrete pressed into its surface.
- Use the full width of the planer, Alternate between the left, the right and the middle when feeding lumber into the planer. Your knives will remain sharp much longer.
- Scrape all glue off of joined boards before planing.
- Plane ONLY natural wood fiber (i.e. DO NOT plane wood composites).
- Surface wood with the grain. NEVER feed end-cut or end-grained lumber into your planer.
- DO NOT use boards with knots, splits, cross-grain or other obvious blemishes or defects. They can damage the machine and pose the possibility of operator injury.
- Keep your work area clear.
- Avoid planing wood with a high water content. Wood with more than 20% moisture content or wood exposed to rain or snow will plane poorly and cause excessive wear to the knives and the motor. Excess moisture can also hasten rust and corrosion.
- During operation, always use the table height lock knob for consistent and accurate results.
- Always true any cupped or warped stock on a jointer before planing.

Wood Characteristics

The species of wood, as well as condition, will affect planing ability—the harder the wood, the more difficult it will be to plane. We have included a list of wood characteristics you may encounter when planing, The following descriptions of defects will give you some possible answers to problems that may arise.

Chipped Grain (Tear Out) — Usually a result of cutting against the grain, or planing wood with knots or excessive amount of cross grain. Chipped grain can also be caused by dull knives or misaligned chip breaker. Often, chipped grain can be avoided by slowing down the feed rate and by taking shallow cuts, If those options do not work, inspect your lumber and determine if its grain pattern is causing the problem. If the wood does not show substantial crossgrain, inspect your knives for sharpness and inspect the chip breaker for proper alignment.

Fuzzy Grain (Raised Grain) — Usually caused by surfacing lumber with too high of a moisture content. Sometimes fuzzy grain is a characteristic of wood such as basswood. Fuzzy grain can also be caused by dull knives or an incorrect grinding bevel. Check with a moisture meter. If moisture is greater than 20%, sticker the wood and allow it to dry. Otherwise, inspect the knife condition.

Glossy Surface — Usually caused by dull knives taking shallow cuts at a slow feed speed. Surface gloss will usually be accompanied by overheating. Lumber will often be scorched and eventually damage to the knives will occur. If the knives are sharp on inspection, increase feed speed or cutting depth.

Snipe — Occurs when board ends have more material removed them the rest of the board. Usually caused when one or both of the table rollers are set too high. Can also be caused by the chip breaker or pressure bar being set too high. However, a small amount of snipe is inevitable.
Snipe can be minimized by proper adjustment of the planer components, but complete removal of snipe is unlikely. More likely, you will be able to reduce it to a tolerance of .002". If snipe under that level is a problem, consider cutting lumber longer that your intended work length and cut off the excess after planing is completed.

Uneven Knife Marks — Uneven knife marks can occur when the chip breaker is set too high. Inspect cutterhead bearings if re-adjustment of the chip breaker fails to remedy the situation.

Chatter Marks — Usually caused by incorrect chip breaker and pressure bar setting heights. Chatter marks can also be caused by running a narrow wood piece through the planer at either the right or left end of the cutterhead. Chatter, like uneven knife marks, will show in the form of a “washboard” look. Chatter marks are more likely to be inconsistent in appearance than uneven knife marks.

Wavy Surface — Caused by poor knife height adjustment, wavy surface appears when one knife is taking deeper cuts than the rest of the knives. Remedy by resetting the knives to a tolerance of approximately .001" from one end to the other.

Pitch & Glue Build-Up — Glue and resin build-up on the rollers and the cutterhead will cause overheating by decreasing cutting sharpness while increasing drag in the feed mechanism. The result can include scorched lumber as well as uneven knife marks and chatter.

Chip Marks — Occur when chips are not properly expelled from the cutterhead. The knives catch the chips and drag them across the lumber being planed. Chips tend to be random and non-uniform (compared to chipped grain). This problem can be caused by exhaust blockage or too much room between the cutterhead and the chip deflector. Using a dust collection system in combination with the planer can help reduce chip marks. Inspect the chip deflector and re-adjust spring tension.

SECTION 8: MAINTENANCE

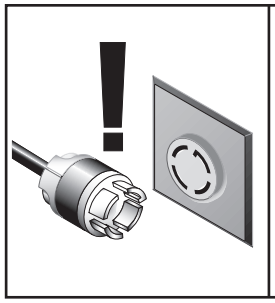

⚠WARNING

Disconnect power to the machine when performing any adjustments or maintenance. Failure to do this may result in serious personal injury.

General

Periodic maintenance on your 20" Extreme Duty Planer Planer ensures its optimum performance. Make a habit of inspecting your planer each time you use it.

Check for the following conditions and repair or replace when necessary.

- Loose mounting bolts.
- Worn switch.
- Worn or damaged cords and plugs.
- Damaged V-belt.
- Any other condition that could hamper the safe operation of this machine.

Cleaning

Regularly blow out cabinet, feed rollers, chip breakers and cutterhead with compressed air (always wear safety glasses and a dust mask when doing this) and keep the dust port clear.

Table

The table and other non-painted surfaces on the Extreme Duty Planer should be protected against rust and pitting. Wiping the table clean after every use ensures that wood dust isn't allowed to trap moisture against bare metal surfaces.

Tables can be kept rust-free with regular applications of products like Boeshield® T-9. For long term storage you may want to consider products like Kleen Bore's Rust Guardit™.

Lubrication

The Extreme Duty Planers have four lubrication points that need to be lubricated according to planer usage. Always lubricate more often under dusty/dirty conditions. As a general rule, lubricate as follows:

1. **Micro-Adjustment Knob** — Once a week for heavy use; once a month for moderate use. See **Figure 20** for grease fitting location.

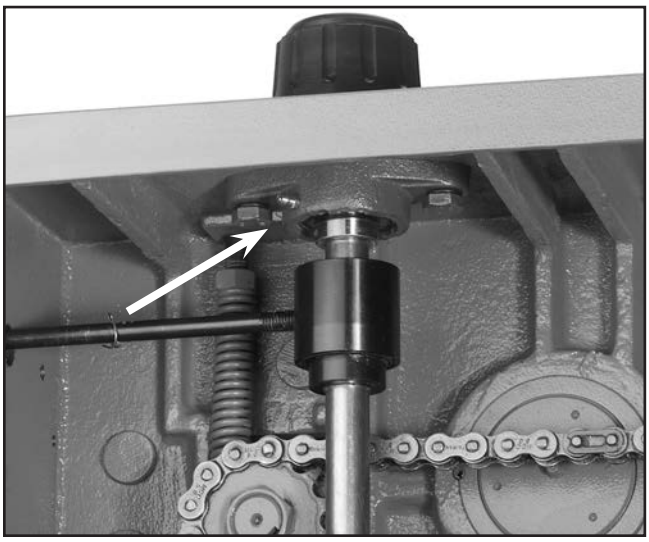

Figure 20. Micro-adjust grease fitting.

2. **Transmission Box** — Lubricate after every 12 hours of continuous use. See **Figure 21** for location.

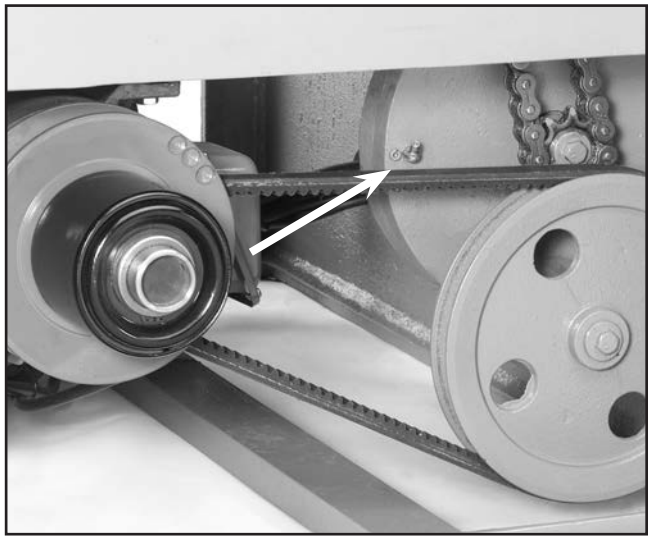

Figure 21. Transmission box grease fitting.

3. **Table Lifting Gears** — Once a week for heavy use; once a month for moderate use. See **Figure 22** for locations.

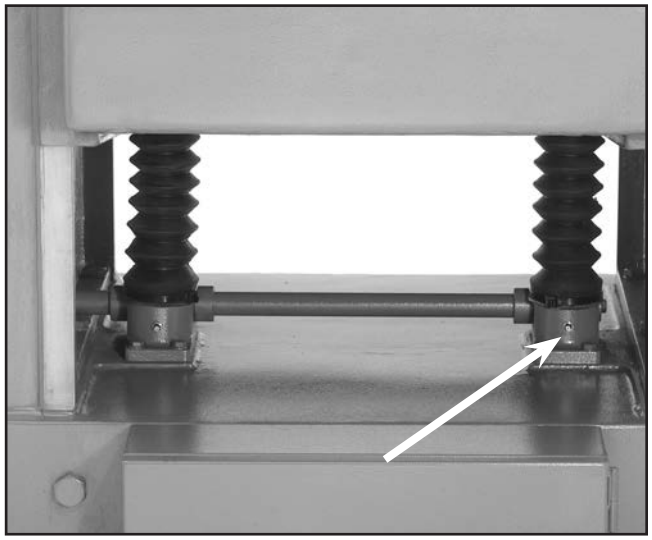

Figure 22. Table lifting gear grease fittings.

4. **Chain** — Clean and regrease as determined by visible inspection for dust or grime in the chain grease.

Always wipe off excess grease from all locations after lubricating!

V-Belt

Avoid getting grease or oil on the V-belts or pulleys. Check the V-belts, as part of a monthly inspection for proper tension and belt condition. Cracking and glazing could result in belt failure. Replace the belt if such conditions appear.

To loosen/tighten belt tension:

1. Thread in the motor mount adjustment bolts (**Figure 23**) to loosen the V-belt. Unthread the adjustment bolts to tighten the V-belt.

Figure 23. Motor mount adjustment bolts.

Maintenance Log

Date	Approximate Hours Of Use	Maintenance Performed

SECTION 9: SERVICE ADJUSTMENTS

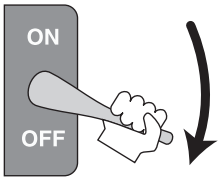

WARNING

Always disconnect power to the machine before performing service adjustments. Failure to do this may result in serious personal injury.

CAUTION

Planer knives are dangerously sharp! Use extreme caution when working near cutting surfaces. Failure to exercise care while working near knives could result in severe injury.

About Service

This section is designed to help the operator with adjustments that were made at the factory and that might also need to be made during the life of the machine.

This section is provided for your convenience—it is not a substitute for the Grizzly Service Department. If any adjustments arise that are not described in this manual, then feel free to call the Grizzly Service Department at (570) 546-9663.

Similarly, if you are unsure of how to perform any procedure in this section, the Grizzly Service Department will be happy to guide you through the procedures or help in any other way.

Adjustment Controls

Figures 5 and 6 point out the primary controls and components that will be used during the adjustment process. Take a few minutes to familiarize yourself with these.

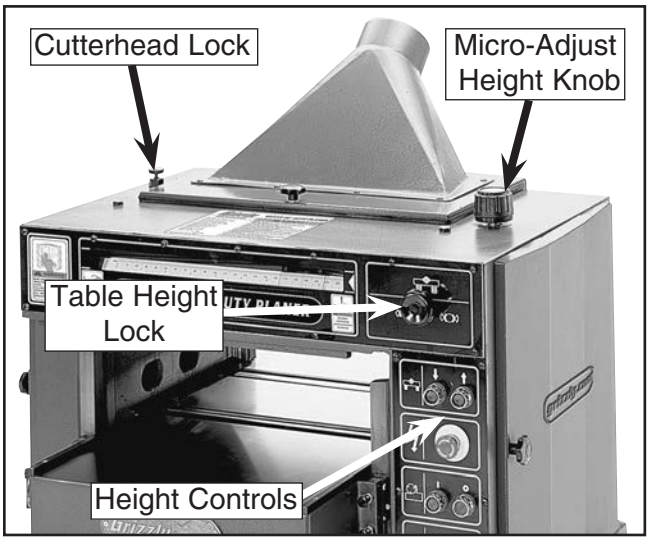

Figure 5. Planer controls.

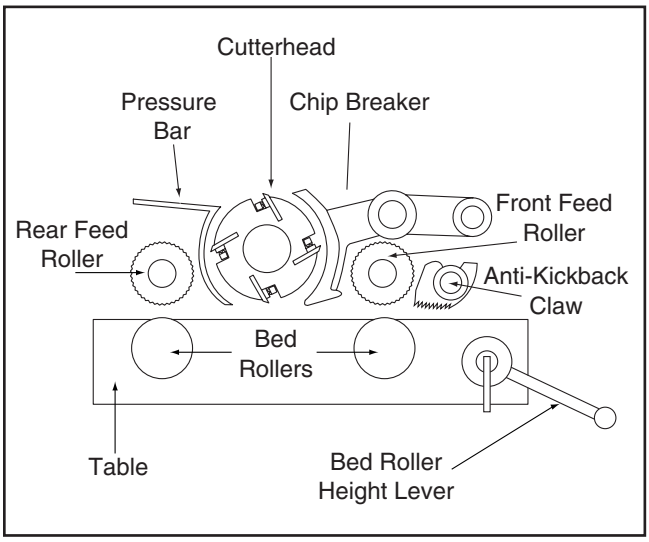

Figure 6. Planer components.

Cutterhead Knives

The **Model G9740/G9741/G9967** features a 4-knife cutterhead. The knives are factory set to .071". Unless you are having problems related to the knives or are removing them for sharpening/replacement, assume that your knives are adjusted correctly. To be safe, always test the planer with a scrap piece of wood before using expensive stock.

When adjusting, make adjustments accurate to within ±.001" from one side to the other. Improperly adjusted knives can unbalance the cutterhead and shorten the bearing life, as well as produce substandard planing results.

⚠CAUTION

Planer knives are dangerously sharp! Use extreme caution when working near cutting surfaces. Failure to exercise care while working near knives could result in severe injury.

To inspect the knife set:

1. **Make sure the planer is disconnected from the power source!**

2. Open the top cover to gain access to the cutterhead. Lock the cutterhead in place with the cutterhead lock as shown in **Figure 7**.

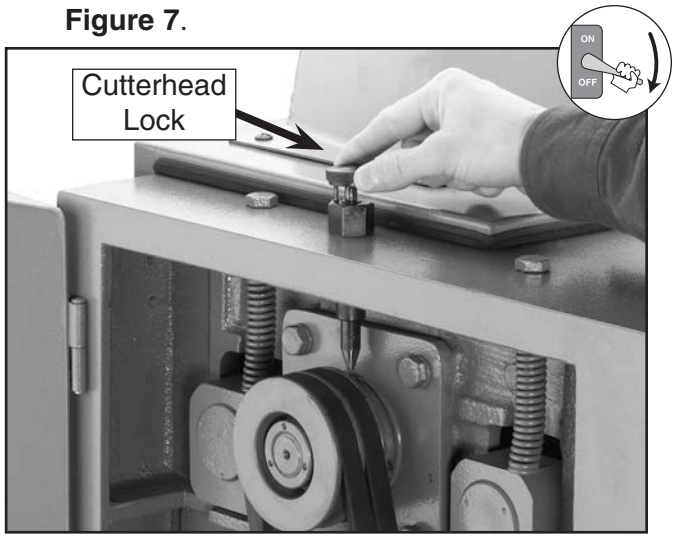

Figure 7. Engaging cutterhead lock.

3. Remove the hex nuts and springs from the tension studs shown in **Figure 8**. This will allow the pressure bar to rotate up and over the cutterhead.

4. Remove the four bolts that attach the pressure bar to the eccentric ring.

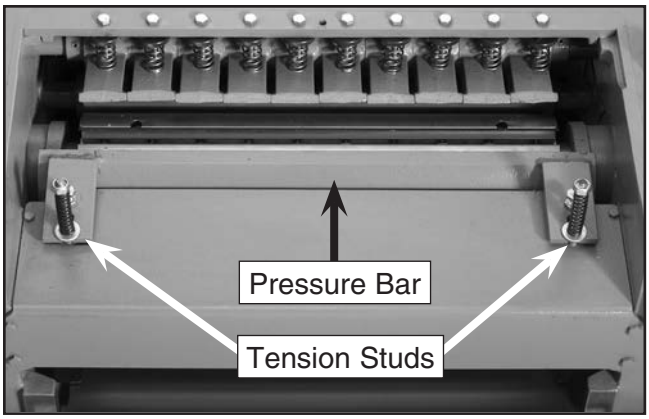

Figure 8. Pressure bar and tension studs.

5. Without bumping the knife edge, carefully take the pressure bar out of the planer. You can now access the cutterhead with the knife setting jig.

6. To prepare the knife setting jig, back all four of the screws out of the feet. Adjusting one screw at a time, set the screw even with the surface of the jig foot. Turn the screw exactly 2½" turns (this is approximately .071"), or measure this distance with a caliper. Tighten the check nut, making sure that the screw does not move. Adjust the other three screws by using this same procedure.

7. Place the jig on the cutterhead. If the knife is adjusted right, the feet should touch the cutterhead body on both sides of the knife, and the knife should barely touch the jig.

8. Repeat this inspection for the other two knives.

To adjust the knife set:

1. Before beginning, make sure you have followed **steps 1-6** from the knife inspection instructions above!

2. **Make sure the planer is disconnected from the power source!**

3. Wear heavy leather gloves or place a rag over the exposed knife to protect your hands if the wrench slips while loosening the gib bolts. Loosen all the gib bolts on one knife.

4. Insert a 4mm hex wrench into the jack screws (accessible from holes in the cutterhead) as shown in **Figure 9**. Turn these screws to lower the knife enough to clear the jig when it is placed on the cutterhead body.

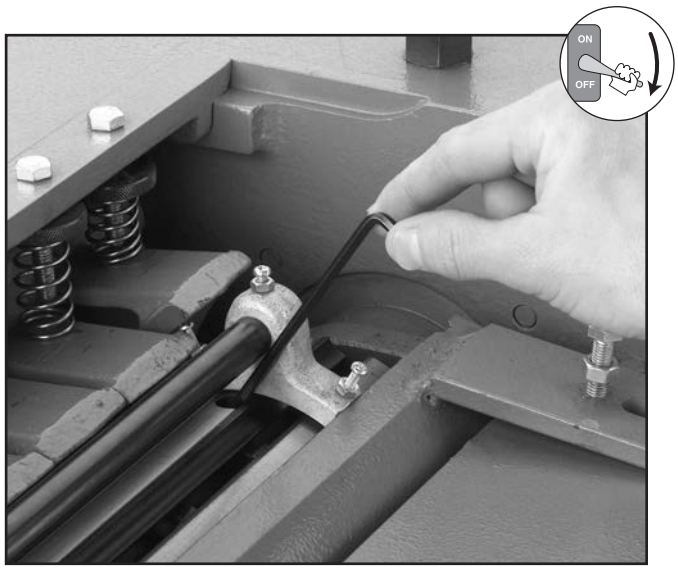

Figure 9. Adjusting knife jack screws.

5. Turn the jack screws with the hex wrench to raise the knife so it barely touches the jig. Perform this adjustment on both ends.

6. Tighten the gib bolts on each side just enough to keep the knife from moving—DO NOT fully tighten at this time.

7. Repeat **steps 2-6** on the other three knives, then move on to **step 8**.

8. Tighten the gib bolts, with medium pressure, in this order: (1) The two center bolts on each of the four knives, (2) the next two bolts outward from the center of each knife, and (3) the rest of the gib bolts in this manner until all bolts on all four knives have been tightened with medium pressure.

9. Now final tighten each of the bolts in the same manner as **step 8**.Tightening the gib bolts two at a time, each knife at a time, will prevent distortion of the cutterhead from over-torquing the gib bolts.

10. Replace all of the removed planer parts and adjust the pressure bar (**pages 17-18**) before operating the planer.

Aftermarket Knife Setting Jigs

To ease the knife adjustment process, consider using a Planer Pal® available in the current Grizzly catalog. Using magnets, a pair of these devices will automatically hold the knife blades within .001" of each other, thereby allowing you to quickly and accurately lock the knife in place.

Carbide Cutters

The **Models G9740Z/G9967Z/G9961** feature spiral cutterheads. These spiral cutterheads cut with indexable carbide inserts which have four cutting edges. Although only one edge can cut at a time, the inserts can be easily rotated when they get dull, essentially providing four factory sharp edges before requiring replacement. Indexable inserts never need to be adjusted for height, only rotated and securely fastened to the cutterhead.

When rotating cutters, the dot on each cutter is used as a reference point when determining which cutter edges are used, or dull, and which are sharp. Be sure to always rotate the cutters in the same direction (see **Figure 10**). Otherwise, the dot will not be an effective reference for determining which cutting surfaces are sharp.

When replacing the carbide cutters, the dimensions are 14mm x 14mm x 2mm, with a 6.5mm bore and 30° relief angles (Model H2334 in the current Grizzly Catalog).

In addition, the spiral cutterhead planers are supplied with an air wrench for loosening and tightening the carbide cutter Torx® screws. This tool is very valuable if you have to rotate or change many of the cutters at one time. T-20 Torx® bits are also included.

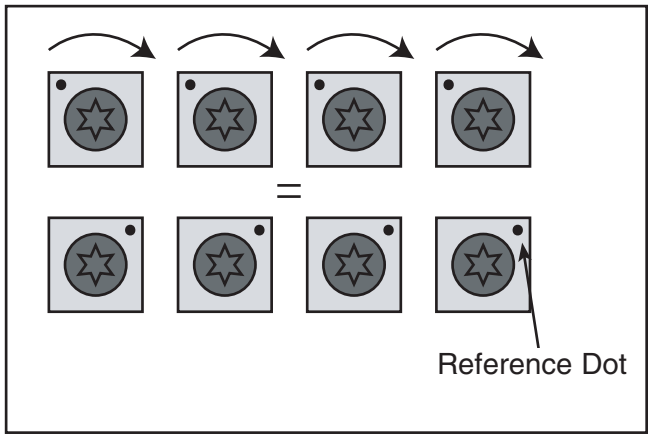

Figure 10. Always rotate carbide cutters in the same direction to keep track of the dull or damaged edges.

To install/adjust the carbide cutters:

1. Disconnect the planer from the power source!

2. Open the top cover door to gain access to the cutterhead, and open the left-hand service door to gain access to the cutterhead pulley, so you can safely rotate the cutterhead.

3. Prepare the air wrench (included with your planer) by installing a T-20 Torx® bit, connecting it to an air compressor regulated to 30 PSI, and setting the air wrench dial to the "2" setting.

   Note—*This low pressure (torque) setting will reduce the chance of cross threading the Torx® screw threads as well as correctly pre-torque the screws before final tightening.*

4. Clean out sawdust from the heads of the Torx® screws that you will loosen.

NOTICE

Remove sawdust from the heads of the Torx® screws before attempting to remove them from the cutterhead. The head of the Torx® screws could become stripped if this is not done.

5. Paying attention to the location of the reference dot, remove and replace/rotate one cutter at a time, sparingly oil the threads of the Torx® screw with a light machine oil, and tighten the screw with the air wrench.

   Note—*Torx® screws that are difficult to remove with the air wrench can be removed with the supplied T-handle. Carefully insert a Torx® bit into the hole on the side of the "cheater bar." This should allow you enough leverage to loosen the Torx® screws.*

NOTICE

Always rotate each insert in the same direction. When an insert returns to the original position, it is time for replacement.

6. After all the carbide cutters that you adjusted have been rotated/replaced, adjust the air compressor air pressure to 82 PSI and make sure the air wrench is still at the "2" setting on the dial (**this final torque setting will be the equivalent of 48-50 INCH pounds**).

7. Now final tighten the Torx® screws.

Table

The table movement is critical to the operation of the Extreme Duty Planers. For the feed rollers to work correctly, the table must be parallel with the cutterhead.

We strongly suggest using a Rotacator® for making adjustments to your planer. This tool is well worth the money, because it provides accuracy within .001". Check with the current Grizzly catalog for details.

As an alternative to using a Rotacator®, construct a block of scrap wood to aid in checking the table. The wood block should be rectangular and should have one side that sits flat on the table. Make the block tall enough to leave adequate working room between the table and the cutterhead, but thin enough to fit between the chip deflector and pressure bar.

To check the table with a Rotacator®:

1. **Make sure the planer is unplugged!**

2. Models G9740Z and G9967Z skip this step. For Models G9740/G9967/G9741/G9961, open the left side service door. Locate the cutterhead lock shown in **Figure 11**. Rotate the pulley and drop (pull up and twist) the cutterhead lock into the THREADED HOLE in the pulley (this should position the cutterhead so the knives are out of the way for table adjustments).

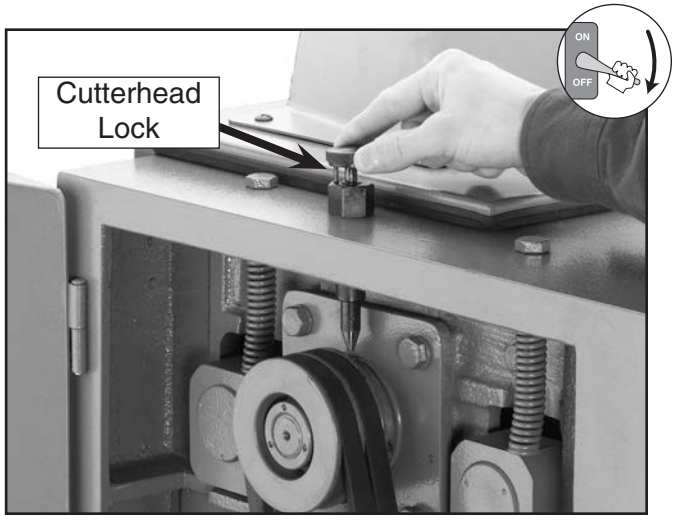

Figure 11. Engaging cutterhead lock.

3. Set the Rotacator® dial to .000". Place the Rotacator® under the cutterhead on one end. Turn the cutterhead so the plunger on the Rotacator® will contact the cutterhead body as shown in **Figure 12**. Raise the table up enough for the cutterhead to get a reading on the dial.

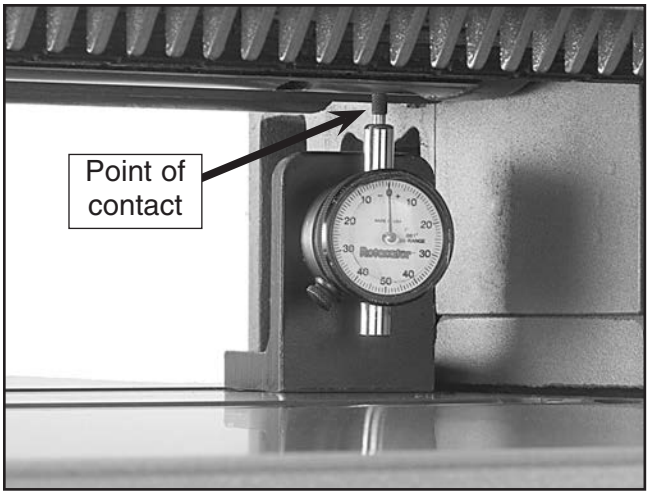

Figure 12. Rotacator measuring cutterhead/ table for being parallel to each other.

4. Move the Rotacator® back and forth to find bottom dead center on the cutterhead. (You will reach bottom dead center when you have the highest reading on the Rotacator® .)

5. Now raise the table up so the Rotacator® reads exactly .050", and set the dial to .000".

6. Move the Rotacator® to the other side of the cutterhead and find bottom dead center. If the difference in either direction of the dial is more than .004", then the table should be adjusted.

To check the table with the block of wood:

1. **Make sure the planer is disconnected from the power source!**

2. Models G9740Z and G9967Z skip this step. For Models G9740 and G9967, open the left side service door. Locate the cutterhead lock shown in **Figure 11**. Pull up and twist so the end of the lock will drop. Rotate the pulley to line up the cutterhead lock with the THREADED HOLE in the pulley (this should position the cutterhead so the knives are out of the way for table adjustments).

3. Place the block of wood on the table, underneath the cutterhead. Position the block on the left side (point "A" in **Figure 13**) of the cutterhead.

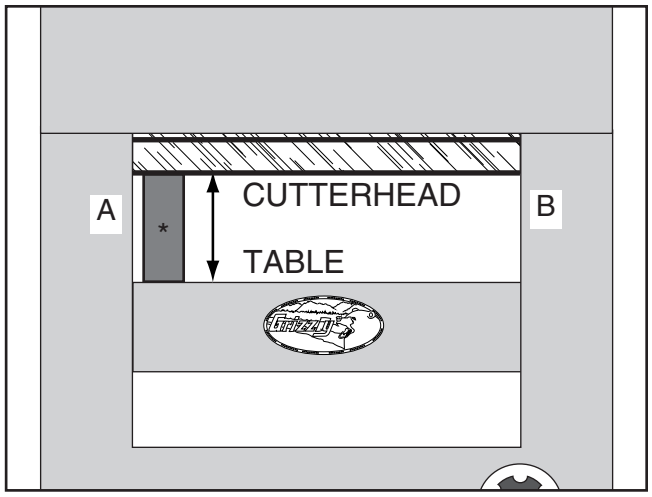

Figure 13. Measure table-to-cutterhead at both points "A" and "B."

4. Raise the table up until the top of the block lightly contacts the bottom of the knife or indexable insert, depending on your model.

5. Without moving the table position, slide the block over to the other side (point "B" in **Figure 13**).

6. If the block will not fit under the cutterhead or if the gap between the block and the cutterhead exceeds .004" (use a feeler gauge to measure this), the table must be adjusted.

To adjust the table with the Rotacator®:

1. **Make sure the planer is disconnected from the power source!**

2. Set the Rotacator® dial to .000". Place the Rotacator® under the cutterhead on the right-hand side (facing front).

3. Turn the cutterhead so the plunger on the Rotacator® contacts the cutterhead body. Raise the table up enough for the cutterhead to get a reading on the dial.

4. Move the Rotacator® back and forth to find bottom dead center on the cutterhead. (You will reach bottom dead center when you have the highest reading on the Rotacator®.)

5. Adjust the table height to make the dial on the Rotacator® read .050", then set the dial to .000". Move the Rotacator® over to the far left end of the cutterhead and find bottom dead center.

6. Locate the two columns underneath the table. These are covered in flexible rubber sleeves. Underneath the sleeves are adjustment flanges that allow you to disengage the table columns from the lifting gears.

   To adjust the table, you need to disengage the opposite side from that which needs to be adjusted.

7. Pull the rubber sleeve down on the determined column to expose the table adjustment flange shown in **Figure 14**. You may need to cut the plastic cable tie in order to remove the sleeve.

Figure 14. Column adjustment flange underneath table.

8. Loosen the two nuts that secure the table adjustment flange; this will allow the opposite side of the table to be moved up or down.

9. Turn the fine adjustment knob to raise the side of the table with the Rotacator® to make the dial read .050" on the Rotacator dial. Double check the table-to-cutterhead measurement on the right end to make sure it did not move. Adjust as necessary. The Rotacator® will allow you to easily get each end within ±.001" of each other.

10. When each end is adjusted properly, tighten all of the nuts at the table mount and clamp. Double check the table-to-cutterhead measurement to make sure the table did not move.

To adjust the table with the wood block:

1. **Make sure the planer is disconnected from the power source!**

2. Place the wood block on the side of the table where the tightest gap exists between the table and the cutterhead.

3. Raise the table so the cutterhead barely touches the wood block. Slide the wood block to the other side of the table, under the other end of the cutterhead.

4. Locate the two columns underneath the table. These are covered in flexible rubber sleeves. Underneath the sleeves are adjustment flanges that allow you to disengage the table columns from the lifting gears.

   To adjust the table, you need to disengage the opposite side that needs to be adjusted.

5. Pull the rubber sleeve down on the determined column to expose the table adjustment flange shown in **Figure 14**. You may need to cut the plastic cable tie in order to remove the sleeve.

6. Loosen the two nuts that secure the table adjustment flange; this will allow the opposite side of the table to be moved up or down.

7. Turn the fine adjustment knob to raise the side of the table with the wood block, so the wood block barely touches the cutterhead.

8. Slide the wood block over to the other side to check for consistency. Adjust the table as necessary until each side is even with each other. Use a feeler gauge to check the tolerances.

9. Tighten the two nuts that secure the table adjustment flange. Double check the table-to-cutterhead measurement to make sure the table did not move.

10. Pull the rubber sleeve back up to its original position. Be sure to secure it with a new plastic cable tie if you cut the old one. The rubber sleeves must cover the lifting column to keep fine sawdust from building up in the gear grease.

11. Set the table rollers as necessary.

Feed Rollers & Pressure Bar

The feed rollers are factory set at .040" below the knife edge at bottom dead center. Adjusting them can be a difficult process and is not recommended when the machine is new, unless the adjustments are necessary for a specific application. If you are not getting satisfactory performance from the feed rollers, adjustments are necessary.

Although not required, we recommend using a Rotacator® for the following setup. Check with the current Grizzly catalog for details.

To set the feed rollers and pressure bar with hardwood blocks:

1. **Make sure the machine is disconnected from power and the knives have been adjusted properly!**

2. Obtain a milled piece of hardwood that is within .002" from one side to another. Rip this piece down the middle. (Two separate boards may also be used if they are within .002" of each other in thickness.)

3. Lower the table rollers below the surface of the table and lock the cutterhead in place.

4. Place the boards on each side of the table as shown in **Figure 15**, so each board spans from the front of the table to the back.

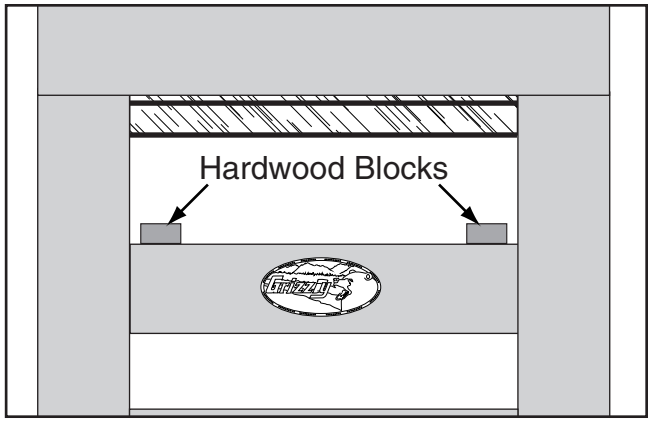

Figure 15. Board position on table.

5. Open the cover. Remove the nut and spring on the tension stud. Rotate the pressure bar up so it covers the cutterhead.

6. Open the left cabinet door. Loosen the check nuts shown in **Figure 16**, and turn the adjustment bolts to raise each block up approximately ½" (enough to be above the horizontal plane of bottom dead center of the cutterhead knife/insert).

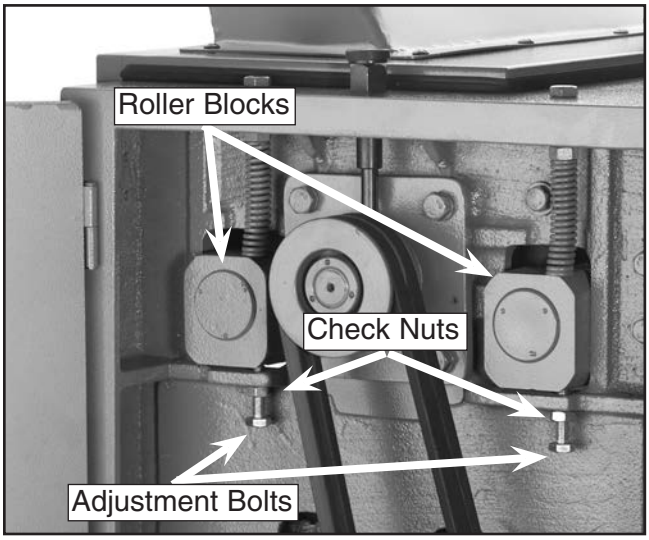

Figure 16. Left side roller controls.

7. Open the right cabinet door. Loosen the check nuts shown in **Figure 17**, and turn the adjustment bolt and setscrew to raise each block the same amount as those from the previous step.

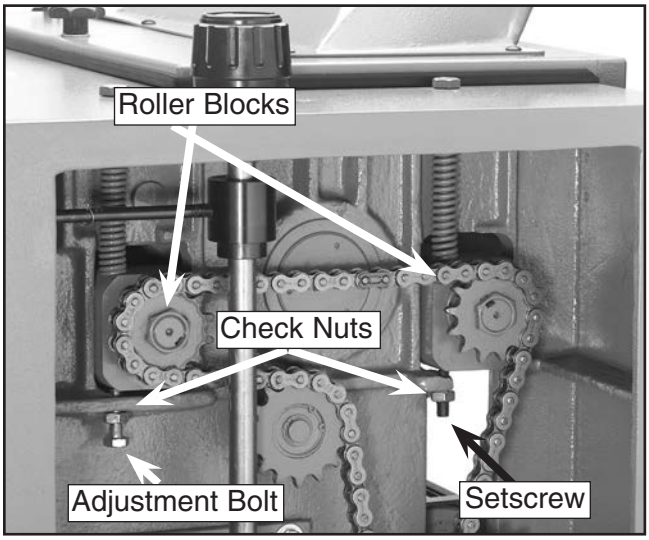

Figure 17. Right side roller controls.

8. Working from the back of the planer is easiest because the anti-kickback pawls hang down in the front. Place a piece of newspaper on each wood block so it is both under the cutterhead and accessible from the back of the planer. The newspaper will act as a feeler gauge to help you know when the table is high enough. (Newspaper is about .003" thick and is long enough for adequate access.)

9. Raise the table close to the knife/insert edge. Continue raising the table with the micro adjust knob while constantly checking for resistance on the newspaper. When you get a medium drag on the paper, stop raising the table and remove the newspaper.

   This table position will now be your reference point from which to make the other adjustments.

10. Lower the feed rollers so they rest on the wood blocks. Back the adjustment bolts out another ⅛" (approximately).

11. Notice where the hairline indicator reads on the table height scale. With the micro-adjustment knob, lower the table approximately 1mm on the scale (1mm = .039").

12. On the right and left sides, raise the adjustment bolts up to the roller blocks and tighten the check nuts. Make sure the adjustment bolts do not move while tightening the check nuts.

13. Rotate the pressure bar down to its original position. On the pressure bar, back the stop bolts out enough so that the pressure bar rests on the wood blocks below.

14. Set the stop bolts so they barely touch the planer body and tighten the check nuts to keep them in place.

15. Replace the springs and nuts. Tighten the nuts down on the tension stud so that the top of the nut is approximately ¼" from the top of the tension stud.

To set the feed rollers and pressure bar with a Rotacator®:

1. **Make sure the planer is disconnected from power and the knives are adjusted properly.**

2. Read the previous instructions about setting the feed rollers and pressure bar with wood blocks—this will familiarize you with how to access and adjust the feed rollers and pressure bar.

3. Engage the cutterhead lock.

4. Place the Rotacator® on the table, underneath the cutterhead. Line up the Rotacator® plunger on the edge of the knife. Set the dial to .000" and lock in place.

5. Move the Rotacator® directly under the one side of the feed roller and set the plunger on a bottom dead center edge. Adjust the feed roller until the Rotacator® reads .040".

6. Repeat **step 4** on each end of each feed roller. Double check for accuracy, then lock the check nuts in place.

7. Adjust the pressure bar using the same procedure as with the feed rollers.

Feed Roller Tension

The feed roller spring tension is factory set and should require no initial adjustments, unless needed for a special type of stock. If a situation develops where the workpiece does not feed straight, adjustments to one roller may be necessary. Usually if the board is moving to one side, that side needs more pressure.

Open the left cabinet door and locate the spring above the feed block (directly above the adjustment bolt from the previous instructions). Turn the nut counter-clockwise to increase the spring tension.

In general, rough stock or deeper cuts require more feed rate pressure (more spring tension). Shallow cuts need less feed rate pressure. Too much pressure increases snipe. Find a balance that is right for your application.

Chip Deflector

The segmented chip breaker is factory set for height, so the only adjustment that can be performed is to the spring pressure.

To adjust the pressure on the chip breaker segments:

1. **Make sure the planer is disconnected from the power source!**

2. Rotate the knurled adjustment rings shown in **Figure 18** either left or right to increase or decrease the spring tension.

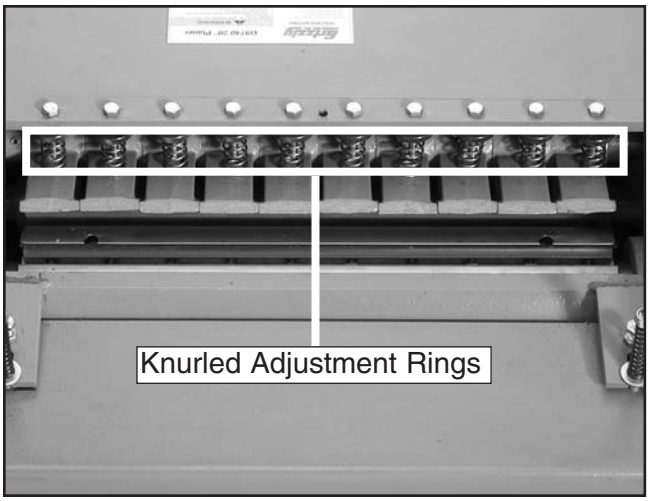

Figure 18. Chip deflector spring pressure controls.

SECTION 10: CLOSURE

The following pages contain general machine data, parts diagrams/lists, troubleshooting guide and Warranty/Return information for your Extreme Duty Planer.

If you need parts or help in assembling your machine, or if you need operational information, we encourage you to call our Service Department. Our trained service technicians will be glad to help you.

If you have comments dealing specifically with this manual, please write to our Bellingham, Washington location using the address in the **General Information** section. The specifications, drawings, and photographs illustrated in this manual represent the Extreme Duty Planer as supplied when the manual was prepared. However, due to Grizzly's policy of continuous improvement, changes may be made at any time with no obligation on the part of Grizzly. Whenever possible, though, we send manual updates to all owners of a particular tool or machine. Should you receive one, add the new information to this manual and keep it for reference.

We have included some important safety measures that are essential to this machine's operation. While most safety measures are generally universal, Grizzly reminds you that each workshop is different and safety rules should be considered as they apply to your specific situation.

⚠WARNING

The Extreme Duty Planer was specifically designed for wood shaping operations only. DO NOT MODIFY AND/OR USE THIS MACHINE FOR ANY OTHER PURPOSE. Modifications or improper use of this tool will void the warranty. If you are confused about any aspect of this machine, DO NOT use it until all your questions have been answered, or serious personal injury may occur.

We recommend you keep a copy of our current catalog for complete information regarding Grizzly's warranty and return policy. If you need additional technical information relating to this machine, or if you need general assistance or replacement parts, please contact the Service Department listed in the **Introduction** section.

Additional information sources are necessary to realize the full potential of this machine. Trade journals, woodworking magazines and your local library are good places to start.

⚠WARNING

Operating this equipment has the potential for flying debris to cause eye injury. Always wear safety glasses or goggles when operating equipment. Everyday glasses or reading glasses only have impact resistant lenses, they are not safety glasses. Be certain the safety glasses you wear meet the appropriate standards of the American National Standards Institute (ANSI).

⚠WARNING

Like all power tools, there is danger associated with the Extreme Duty Planer. Accidents are frequently caused by lack of familiarity or failure to pay attention. Use this tool with respect and caution to lessen the possibility of operator injury. If normal safety precautions are overlooked or ignored, serious personal injury may occur.

MACHINE DATA SHEET

Customer Service #: (570) 546-9663 • To Order Call: (800) 523-4777 • Fax #: (800) 438-5901

MODEL G9740/G9740Z
20" EXTREME-DUTY PLANER

Design Type ..... Floor Model

Overall Dimensions:

Table Size ..... 24" x 35½"
Overall Depth ..... 36"
Overall Width ..... 42⅜"
Shipping Weight ..... 1788 lbs
Net Weight ..... 1600 lbs
Crate Size ..... 46⅝" L x 40" W x 45½" H
Footprint ..... 40½" W x 30" D

Capacities:

Maximum Depth of Cut ..... 5/16"
Maximum Width of Cut ..... 20"
Maximum Cutting Height ..... 9"
Minimum Stock Thickness ..... ¼"
Minimum Stock Length ..... 10"
Cutterhead Diameter ..... 4⅝"
Cutterhead Speed ..... 5000 RPM
Cuts per Minute 20,000
Feed Rate ..... 20 - 40 FPM
Cuts Per Inch ..... 41.6 - 83.3

Construction:

Table ..... Precision-Ground Cast Iron
Power Feed Rollers ..... Steel, Segmented Infeed, Polished Outfeed
Cutterhead (G9740) ..... 4 Knife, High Speed Steel, 20" x 1⅛" x ⅛"
Cutterhead (G9740Z) ..... Spiral w/Indexable Carbide Inserts

Motors:

Cutterhead Motor ..... 7½ HP, Three-Phase / 220/440V
Amps 20/10
Feed Motor ..... 1 HP
Amps 3.7/1.9
Table Lift Motor ..... ½ HP
Amps 1.8/0.9
Cutterhead Power Transfer ..... Belt Drive
Motor Bearings ..... Shielded & Lubricated Ball Bearings

Features:

..... Table Height Scale
..... Micro Adjustment of Table Height
..... Segmented Chip Breaker
..... Variable Feed Rate
..... 6" Dust Port
..... Convenient Control Panel

Specifications, while deemed accurate, are not guaranteed.

MACHINE DATA SHEET

Customer Service #: (570) 546-9663 • To Order Call: (800) 523-4777 • Fax #: (800) 438-5901

MODEL G9967/G9967Z
20" EXTREME DUTY PLANER

Design Type	Floor Model
Overall Dimensions:	
Table Size	24" x 35½"
Overall Depth	36"
Overall Width	42⅜"
Shipping Weight	1807 lbs
Net Weight	1600 lbs
Crate Size	46⅝" L x 40" W x 45½" H
Footprint	40½" W x 30" D
Capacities:	
Maximum Depth of Cut	5/16"
Maximum Width of Cut	20"
Maximum Cutting Height	9"
Minimum Stock Thickness	¼"
Minimum Stock Length	10"
Cutterhead Diameter	4⅝"
Cutterhead Speed	5000 RPM
Cuts per Minute	20,000
Feed Rate	20 - 40 FPM
Cuts Per Inch	41.6 - 83.3
Construction:	
Table	Precision-Ground Cast Iron
Power Feed Rollers	Steel, Segmented Infeed, Polished Outfeed
Cutterhead (G9967)	4 Knife, High Speed Steel, 20" x 1⅛" x ⅛"
Cutterhead (G9967Z)	Spiral w/Indexable Carbide Inserts
Motors:	
Cutterhead Motor	5 HP, Single-Phase/220V
Amps	28
Feed Motor	1 HP
Amps	7
Table Lift Motor	½ HP
Amps	3.7
Cutterhead Power Transfer	Belt Drive
Motor Bearings	Shielded & Lubricated Ball Bearings
Features:	
	Table Height Scale
	Micro Adjustment of Table Height
	Segmented Chip Breaker
	Variable Feed Rate
	6" Dust Port
	Convenient Control Panel

Specifications, while deemed accurate, are not guaranteed.

MACHINE DATA SHEET

Grizzly Industrial, Inc.®

Customer Service #: (570) 546-9663 • To Order Call: (800) 523-4777 • Fax #: (800) 438-5901

MODEL G9741/G9961
24" EXTREME DUTY PLANER

Design Type ..... Floor Model

Overall Dimensions:

Table Size	28" x 35½"
Overall Depth	36"
Overall Width	46⅜"
Shipping Weight	1943 lbs
Net Weight	1760 lbs
Crate Size	46⅝" L x 44" W x 45½" H
Footprint	44½" W x 30" D

Capacities:

Maximum Depth of Cut	5/16"
Maximum Width of Cut	24"
Maximum Cutting Height	9"
Minimum Stock Thickness	¼"
Minimum Stock Length	10"
Cutterhead Diameter	4⅝"
Cutterhead Speed	5000 RPM
Cuts per Minute	20,000
Feed Rate	20 - 40 FPM
Cuts Per Inch	41.6 - 83.3

Construction:

Table	Precision-Ground Cast Iron
Power Feed Rollers	Steel, Segmented Infeed, Polished Outfeed
Cutterhead (G9741)	4 Knife, High Speed Steel, 24 x 1⅛ x ⅛"
Cutterhead (G9961)	Spiral w/Indexable Carbide Inserts

Motors:

Cutterhead Motor	10 HP, Three-Phase / 220/440V
Amps	26/13
Feed Motor	1 HP
Amps	3.7/1.9
Table Lift Motor	½ HP
Amps	1.8/0.9
Cutterhead Power Transfer	Belt Drive
Motor Bearings	Shielded & Lubricated Ball Bearings

Features:

- Table Height Scale
- Micro Adjustment of Table Height
- Segmented Chip Breaker
- Variable Feed Rate
- 6" Dust Port
- Convenient Control Panel

Specifications, while deemed accurate, are not guaranteed.

G9740/G9740Z/G9967/G9967Z/G9741/G9961

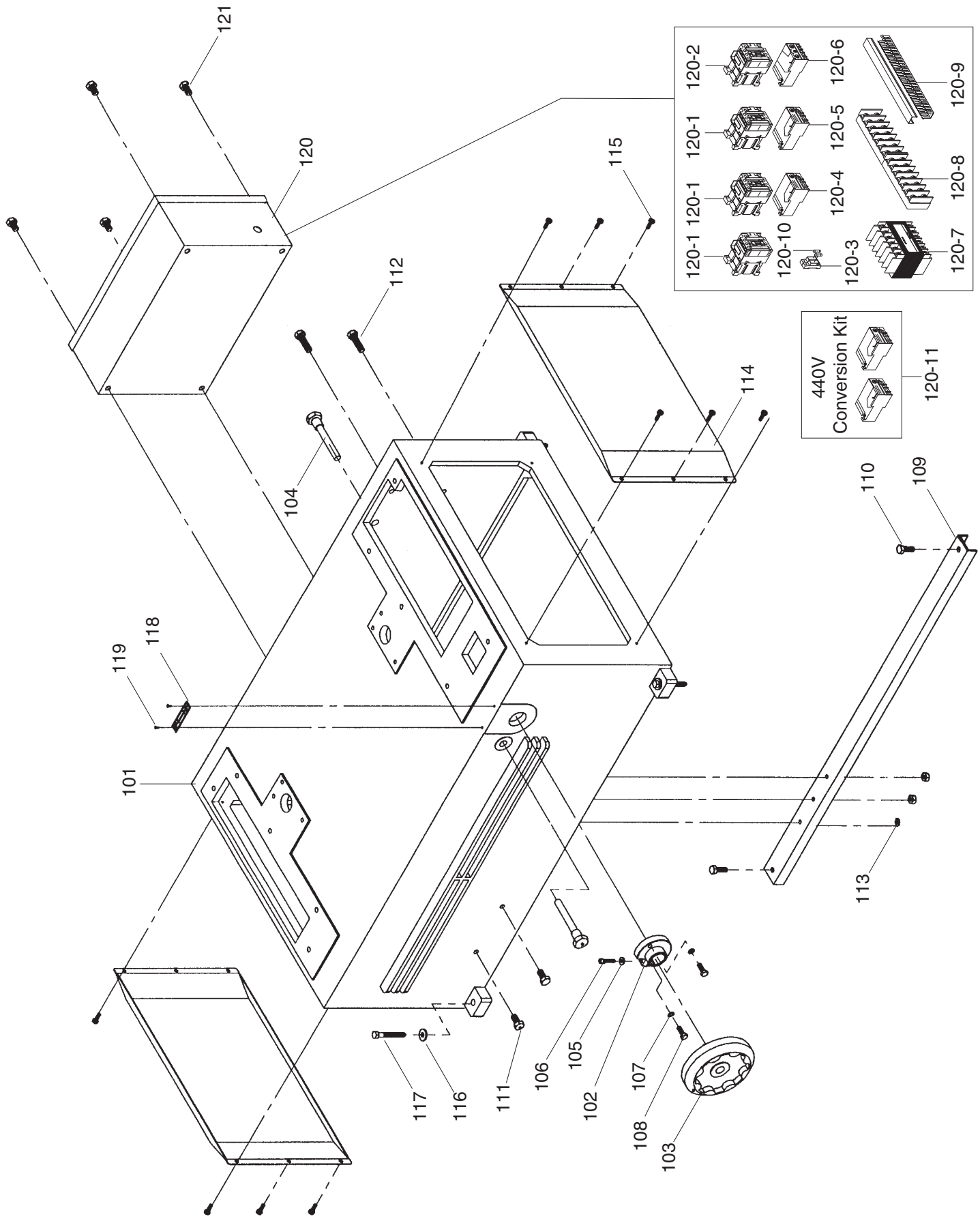

G9740/G9740Z/G9967/G9967Z/G9741/G9961

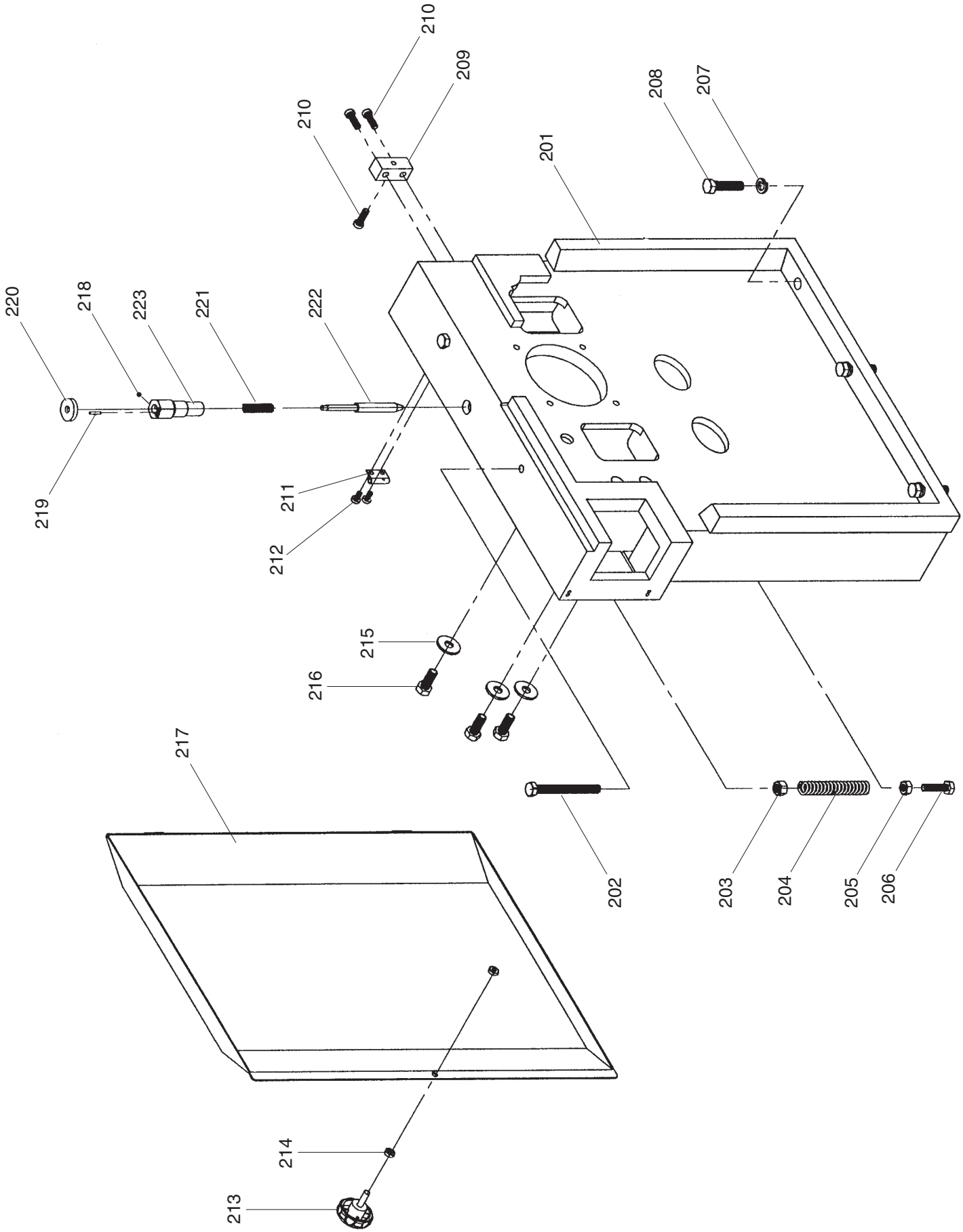

G9740/G9740Z/G9967/G9967Z/G9741/G9961

REF	PART #	DESCRIPTION
101	P97400101	CABINET (20")
101	P97410101	CABINET (24")
102	P97400102	SPEED CHANGE NUT
103	P97400103	HANDWHEEL
104	P97400104	SLIP BOLT
105	PW06	FLAT WASHER 1⁄4
106	PSB62	CAP SCREW 1⁄4-20 X 1 1⁄2
107	PLW04M	LOCK WASHER 8MM
108	PB07M	HEX BOLT M8-1.25 X 25
109	P97400109	MOTOR MOUNT (20")
109	P97410109	MOTOR MOUNT (24")
110	PB01M	HEX BOLT M10-1.5 X 30
111	PB25M	HEX BOLT M12-1.75 X 25
112	PB24M	HEX BOLT M12-1.75 X 45
113	PN02M	HEX NUT M10-1.5
114	P97400114	CABINET DOOR
115	PS26M	PHLP HD SCR M6-1 X 20
116	PW02	FLAT WASHER 3⁄8
117	PB60	HEX BOLT 3⁄8-16 X 3
118	P97400118	SPEED CHANGE LABEL
119	P97400119	RIVET
120	P97400120	ELECTRIC BOX
120-1	P97400120-1	CN-11 CONTACTOR
120-2	P97400120-2	CN-18 CONTACTOR (7.5HP)
120-2	P99670120-2	CN-25 CONTACTOR (5/10HP)
120-3	P97400120-3	FUSE BOX
120-4	P97400120-4	RHN-18/2.5A RELAY (ELV 3Ø)
120-4	P99670120-4	RHN-18/4A RELAY (ELV 1Ø)
120-5	P97400120-5	RHN-18/6A RELAY (FEED 3Ø)
120-5	P99670120-5	RHN-18/9A RELAY (FEED 1Ø)
120-6	P97400120-6	EOCR-SP RELAY (7.5HP)

REF	PART #	DESCRIPTION
120-6	P99670120-6	EOCR-SS RELAY (5/10HP)
120-7	P97400120-7	TRANSFORMER
120-8	P97400120-8	TERMINAL STRIP 26 CIRCUIT
120-9	P97400120-9	WIRING DUCT W/COVER
120-10	P97400120-10	FUSE 3 AMP
120-11	P97400120-11	440V CONVERSION KIT
		(RELAYS RH-18 1.7-2.5/1-1.7)
121	PB49M	HEX BOLT M12-1.75 X 20
201	P97400201	LEFT WALL
202	PB76M	HEX BOLT M12-1.75 X 110
203	PN09M	HEX NUT M12-1.75
204	P97400204	HELICAL ROLLER SPRING
205	PN02M	HEX NUT M10-1.5
206	PB31M	HEX BOLT M10-1.5 X 40
207	PLW05M	LOCK WASHER 12MM
208	PB33M	HEX BOLT M12-1.75 X 50
209	P97400209	COVER SUPPORT
210	PSB31M	CAP SCREW M8-1.25 X 25
211	P97400211	CATCH PLATE
212	PS65M	PHLP HD SCR M6-1 X 10
213	P97400213	KNOB BOLT M10-1.5 X 20
214	PN03M	HEX NUT M8-1.25
215	PW06M	FLAT WASHER 12MM
216	PB27M	HEX BOLT M12-1.75 X 30
217	P97400217	LEFT WALL DOOR
218	PSS02M	SET SCREW M6-1 X 6
219	PRP64M	ROLL PIN 3 X 18
220	P97400220	HANDLE
221	P97400221	HELICAL PULLEY SPRING
222	P97400222	BRAKE ROD
223	P97400223	BRAKE CASING

G9740/G9740Z/G9967/G9967Z/G9741/G9961

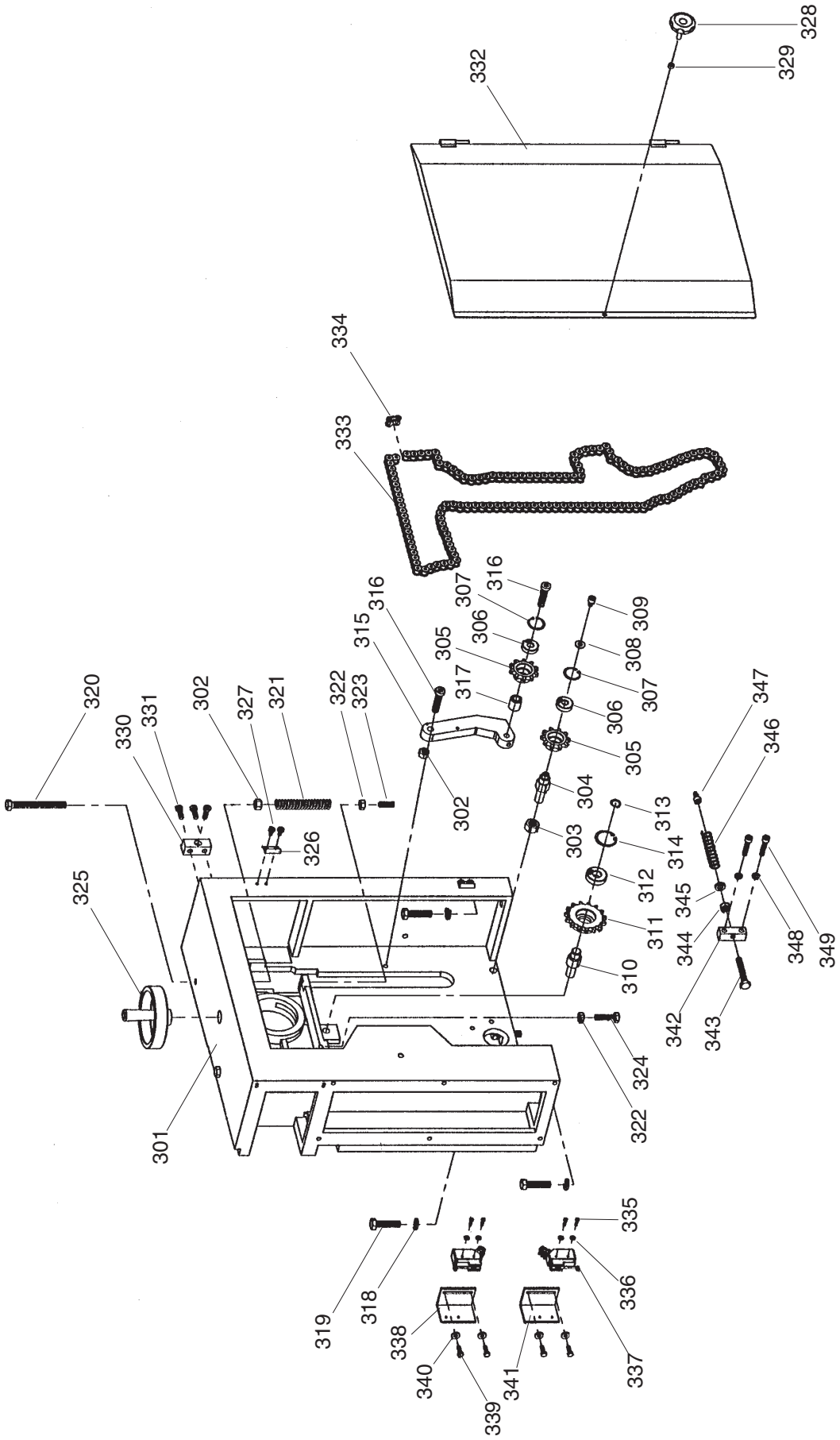

G9740/G9740Z/G9967/G9967Z/G9741/G9961

REF	PART #	DESCRIPTION
301	P97400301	RIGHT WALL
302	PN09M	HEX NUT M12-1.75
303	PN04	HEX NUT 5⁄8-11
304	P97400304	SPROCKET SHAFT
305	P97400305	SPROCKET
306	P6201	BALL BEARING 6201
307	PR29M	INT RETAINING RING 32MM
308	P97400308	SPECIAL WASHER 8MM
309	PSB52M	CAP SCREW M8-1.25 X 10
310	P97400310	SPROCKET SHAFT
311	P97400311	SPROCKET
312	P6203	BALL BEARING 6203
313	P97400313	EXT RETAINING RING 17MM
314	PR23M	INT RETAINING RING 40MM
315	P97400315	SPROCKET PLATE
316	PSB73M	CAP SCREW M12-1.75 X 50
317	P97400317	BEARING WASHER
318	PLW07	LOCK WASHER 1⁄2
319	PB33M	HEX BOLT M12-1.75 X 50
320	PB76M	HEX BOLT M12-1.75 X 110
321	P97400321	HELICAL ROLLER SPRING
322	PN02M	HEX NUT M10-1.5
323	PSS73M	SET SCREW M10-1.5 X 30
324	PB31M	HEX BOLT M10-1.5 X 40
325	P97400325	HANDWHEEL

REF	PART #	DESCRIPTION
326	P97400326	CATCH PLATE
327	PS65M	PHLP HD SCR M6-1 X 10
328	P97400328	KNOB BOLT M10-1.5 X 20
329	PN02M	HEX NUT M8-1.25
330	P97400330	COVER SUPPORT
331	PSB31M	CAP SCREW M8-1.25 X 25
332	P97400332	RIGHT WALL DOOR
333	P97400333	CHAIN 5⁄8
334	P97400334	CHAIN CONNECTOR LINK 5⁄8
335	PS17M	PHLP HD SCR M4-.7 X 6
336	PW05M	FLAT WASHER 4MM
337	P97400337	LIMIT SWITCH
338	P97400338	UPPER LIMIT SWITCH PLATE
339	PB08M	HEX BOLT M6-1 X 20
340	PW06	FLAT WASHER 1⁄4
341	P97400341	LOWER LIMIT SWITCH PLATE
342	P97400342	SEAT
343	PB31M	HEX BOLT M10-1.5 X 40
344	PN02M	HEX NUT M10-1.5
345	PW04M	FLAT WASHER 10MM
346	P97400346	HELICAL SPRING
347	P97400347	CAP SCREW M8-1.25 X 6
348	PLW04M	LOCK WASHER 8MM
349	PSB12M	CAP SCREW M8-1.25 X 40

G9740/G9740Z/G9967/G9967Z/G9741/G9961

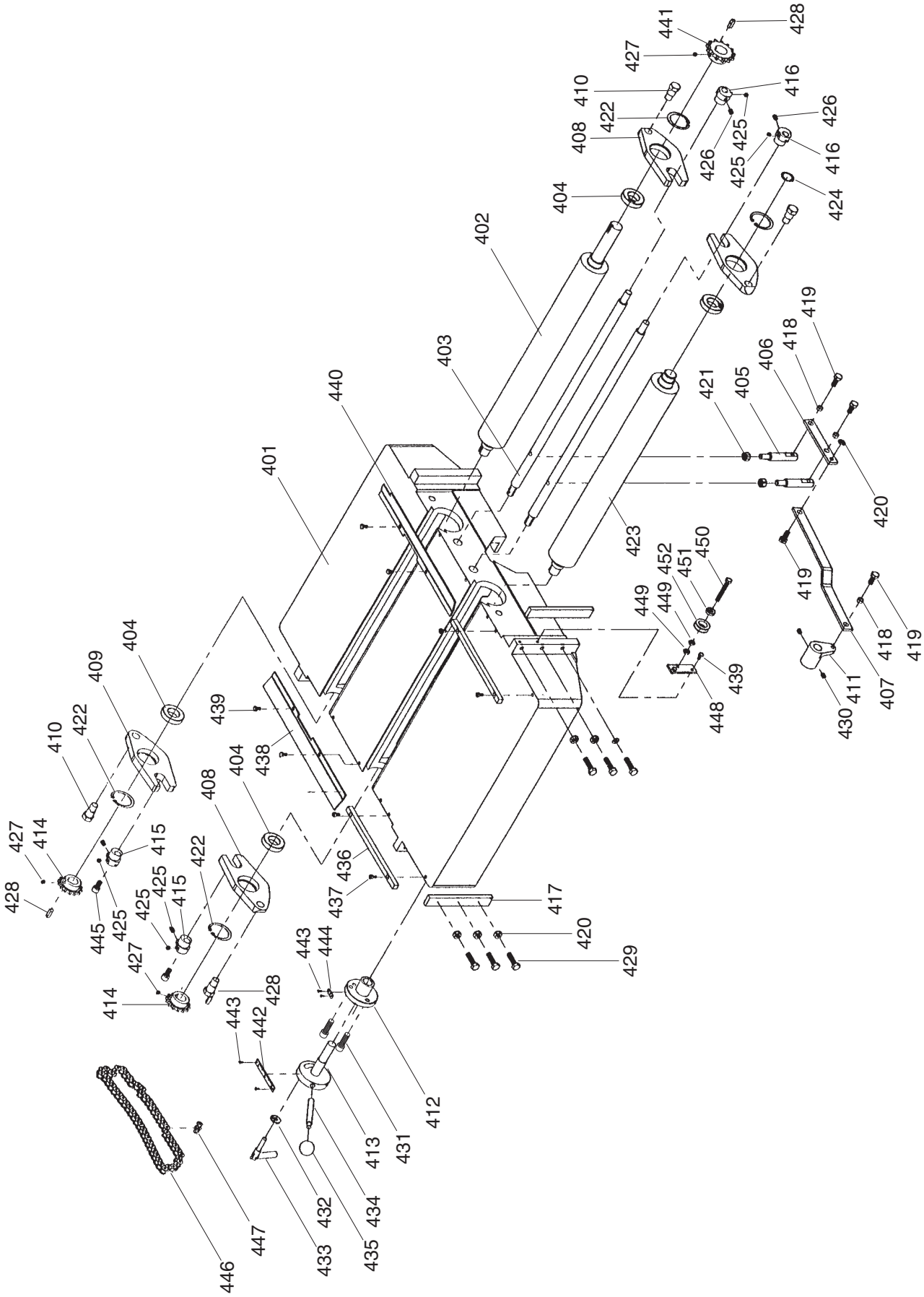

G9740/G9740Z/G9967/G9967Z/G9741/G9961

REF	PART #	DESCRIPTION
401	P97400401	TABLE (20")
401	P97410401	TABLE (24")
402	P97400402	TABLE ROLLER (20")
402	P97410402	TABLE ROLLER (24")
403	P97400403	ECCENTRIC SHAFT (20")
403	P97410403	ECCENTRIC SHAFT (24")
404	P6006	BALL BEARING 6006
405	P97400405	ECCENTRIC PULL ROD
406	P97400406	SHORT ROLLER ADJ BAR
407	P97400407	LONG ROLLER ADJ BAR
408	P97400408	ROLR BEARING HOUSING (R)
409	P97400409	ROLR BEARING HOUSING (L)
410	P97400410	HOUSING PIVOT BOLT
411	P97400411	ACCOLADE SEAT
412	P97400412	ADAMANT SEAT
413	P97400413	ADJUSTMENT SEAT
414	P97400414	CLOSED SPROCKET 14T
415	P97400415	ROLLER ECCENTRIC (L)
416	P97400416	ROLLER ECCENTRIC (R)
417	P97400417	GIB (20")
417	P97410417	GIB (24")
418	P97400418	SPACER RING
419	PB32M	HEX BOLT M10-1.5 X 25
420	PN02M	HEX NUT M10-1.5
421	PN09M	HEX NUT M12-1.75
422	PR51M	INT RETAINING RING 55MM
423	P97400423	SHORT ROLLER (20")
423	P97410423	SHORT ROLLER (24")
424	PR15M	EXT RETAINING RING 30MM

REF	PART #	DESCRIPTION
425	PSB69	CAP SCREW 5⁄16-18 X 1⁄4
426	PSS08	SET SCREW 5⁄16-18 X 1⁄2
427	PSS17M	SET SCREW M8-1.25 X 6
428	PK27M	KEY 7 X 7 X 25
429	PB31M	HEX BOLT M10-1.5 X 40
430	PSB52M	CAP SCREW M8-1.25 X 10
431	PSB11M	CAP SCREW M8-1.25 X 16
432	PW02	FLAT WASHER 3⁄8
433	P97400433	MOVABLE BOLT 3⁄8
434	P97400434	ADJUSTMENT HANDLE STUD
435	P97400435	ROUND KNOB (FEMALE) 3⁄8
436	P97400436	DOUBLE-SIDED IRON BAR
437	PSB26M	CAP SCREW M6-1 X 12
438	P97400438	LEFT PROTECTION PLATE
439	PB02M	HEX BOLT M6-1 X 12
440	P97400440	RIGHT PROTECTION PLATE
441	P97400441	TABLE ROLLER SPROCKET
442	P97400442	HANDLE SCALE MARK
443	P97400443	RIVET
444	P97400444	GRADUATED SCALE
445	PSB61M	CAP SCREW M10-1.5 X 20
446	P97400446	CHAIN 1⁄2
447	P97400447	CHAIN 1⁄2 MASTER LINK
448	P97400448	TABLE PULLEY PLATE
449	PN03M	HEX NUT M8-1.25
450	PSB66M	CAP SCREW M8-1.25 X 65
451	P608ZZ	BALL BEARING 608ZZ
452	P97400452	PULLEY L

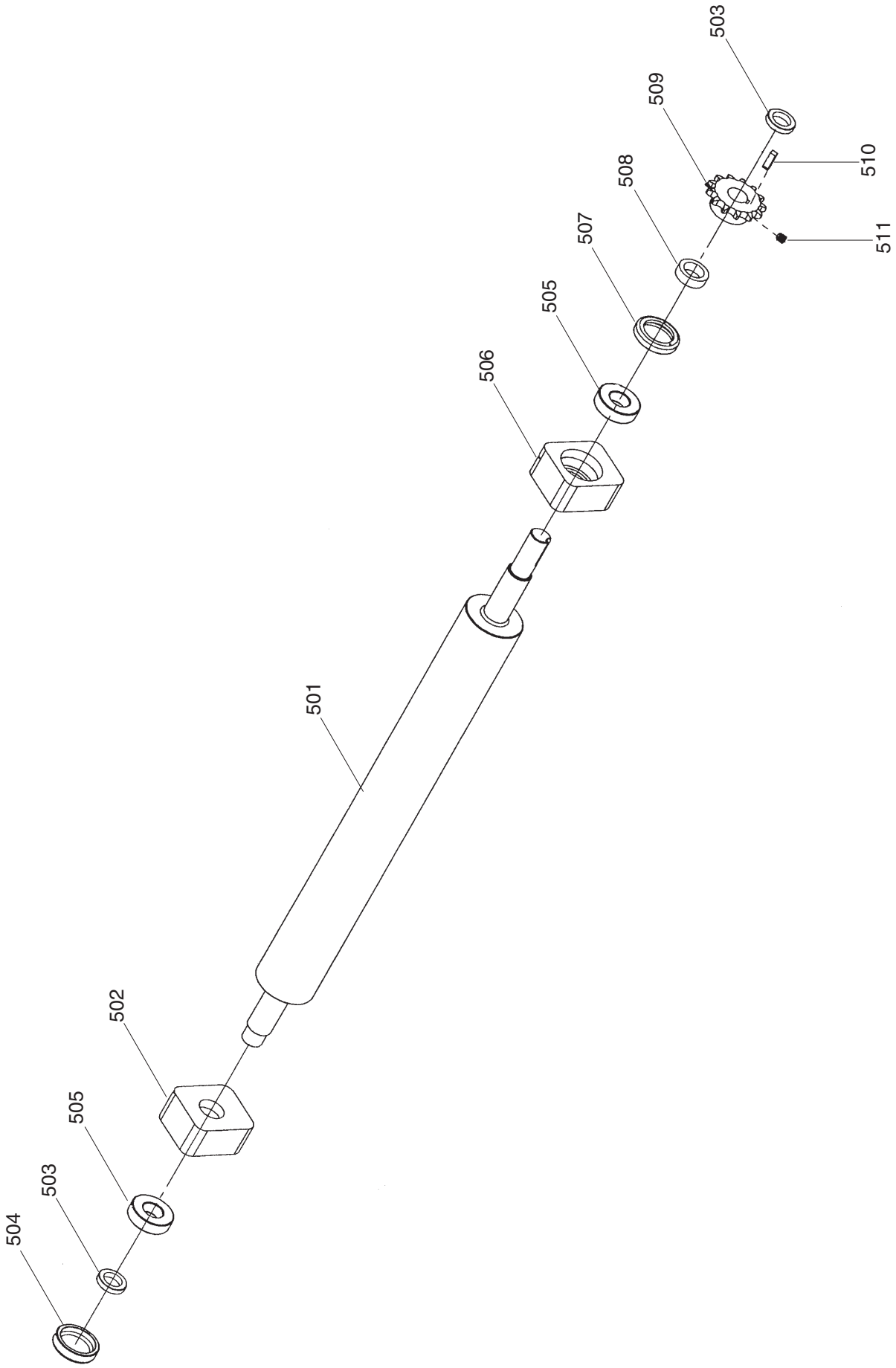
504
503
505
502
501
506
505
507
508
509
503
510
511

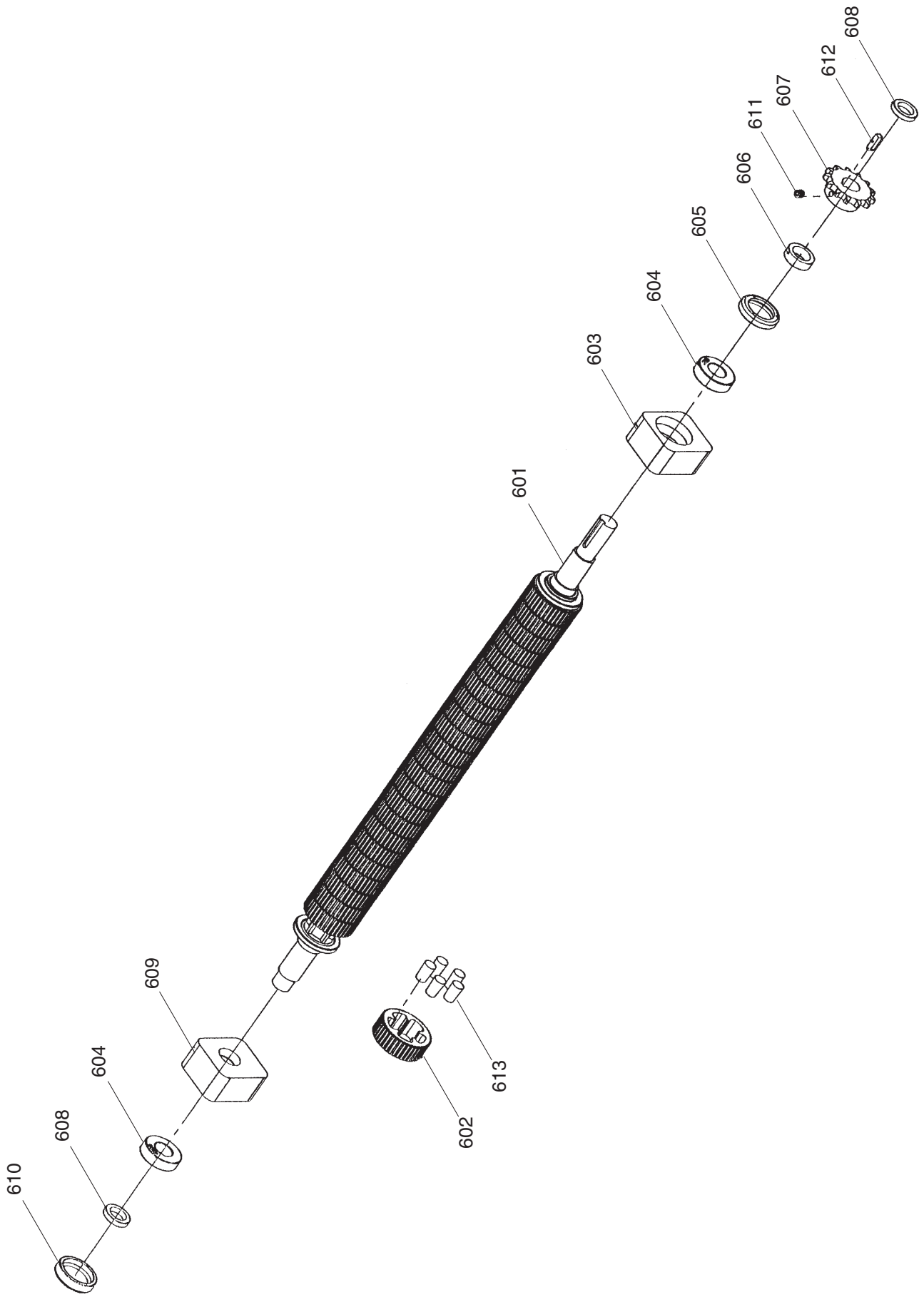
608
612
607
611
606
605
604
603
601
609
604
608
610
602
613

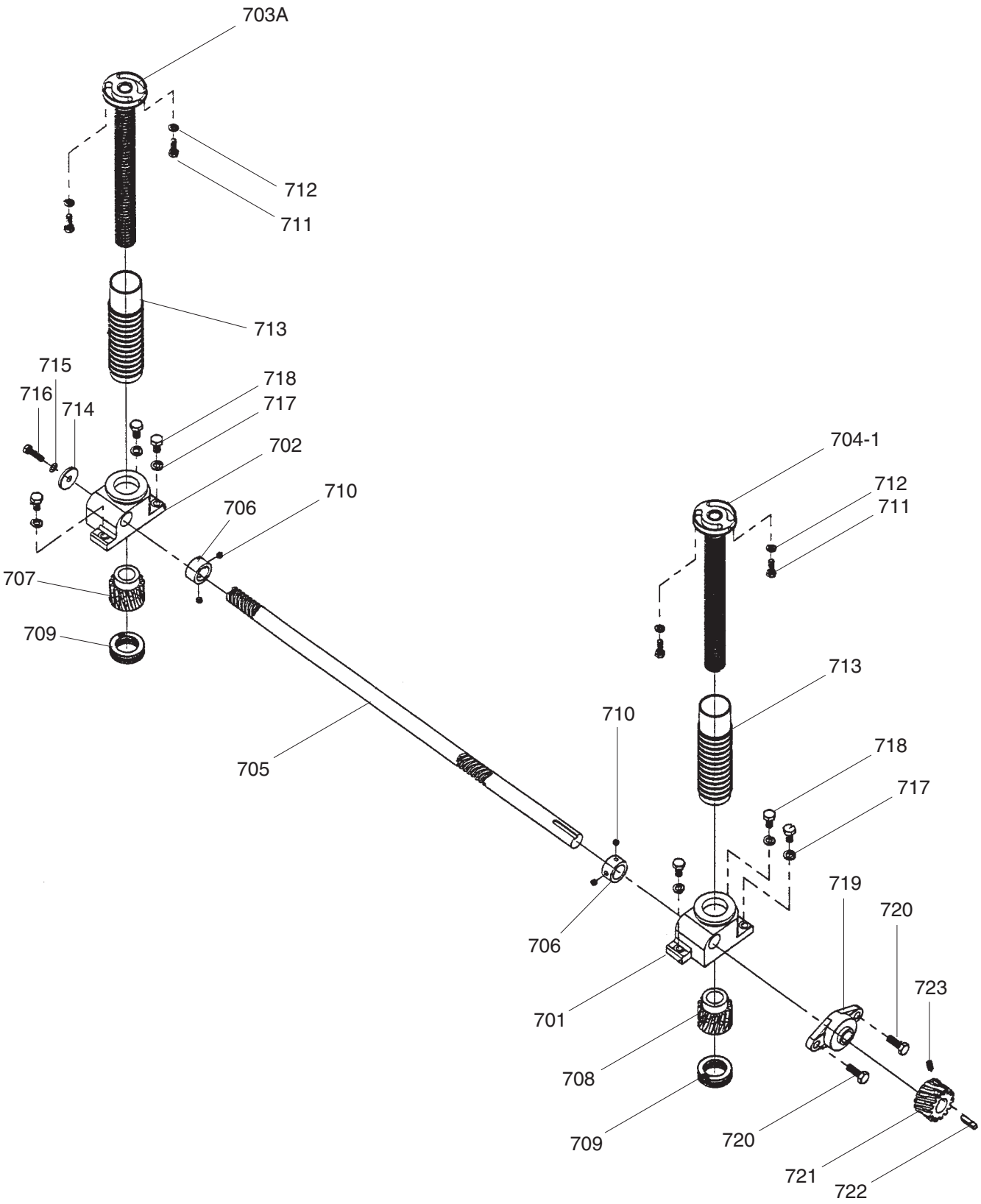
703A
712
711
713
715
716
714
718
717
702
710
706
707
709
705
704-1
712
711
713
710
718
717
706
719
720
701
723
708
709
720
721
722

G9740/G9740Z/G9967/G9967Z/G9741/G9961

REF	PART #	DESCRIPTION
501	P97400501	OUTFEED ROLLER (20")
501	P97410501	OUTFEED ROLLER (24")
502	P97400502	LEFT BEARING BLOCK (RT)
503	P97400503	FIXED BEARING NUT
504	P97400504	LEFT CASE COVER
505	P6205	BALL BEARING 6205
506	P97400506	RIGHT BEARING BLOCK (LT)
507	P97400507	RIGHT CASE COVER
508	P97400508	SPROCKET WASHER
509	P97400509	FEED ROLLER SPROCKET
510	PK27M	KEY 7 X 7 X 25
511	PSS15	SET SCREW 3⁄8-16 X 3⁄8
601	P97400601	INFEED ROLLER (20")
601	P97410601	INFEED ROLLER (24")
602	P97400602	COLLAR
603	P97400603	RIGHT ROLLER CASE (LT)
604	P6205	BALL BEARING 6205
605	P97400605	RIGHT CASE COVER
606	P97400606	SPROCKET WASHER
607	P97400607	FEED ROLLER SPROCKET
608	P97400608	BEARING FIXED NUT
609	P97400609	LEFT ROLLER CASE (RT)
610	P97400610	LEFT CASE COVER
611	PSS15	SET SCREW 3⁄8-16 X 3⁄8
612	PK27M	KEY 7 X 7 X 25

REF	PART #	DESCRIPTION
613	P97400613	CIRCULAR RUBBER
701	P97400701	LIFTING GEAR SEAT (R)
702	P97400702	LIFTING GEAR SEAT (L)
703A	P97400703	LIFTING GEAR ASSY LEFT
704-1	P97400704	RIGHT LIFT SCR 1-1/404 X 400 W/GEAR
705	P97400705	WORM GEAR (20")
705	P97410705	WORM GEAR (24")
706	P97400706	FIXED STOP COLLAR
707	P97400707	LEFT LIFTING GEAR
708	P97400708	RIGHT LIFTING GEAR
709	P2907	BALL BEARING 2907
710	PSS05	SET SCREW 5/6-18 X 1⁄4
711	PB07M	HEX BOLT M8-1.25 X 25
712	PLW01	LOCK WASHER 5⁄16
713	P97400713	RUBBER SLEEVE
714	P97400714	FENDER WASHER 3/8
715	PLW04M	LOCK WASHER 8MM
716	PB26M	HEX BOLT M8-1.25 X 30
717	PLW06M	LOCK WASHER 10MM
718	PB74M	HEX BOLT M10-1.5 X 20
719	P6205	BALL BEARING 6205
720	PB01M	HEX BOLT M10-1.5 X 30
721	P97400721	WORM WHEEL
722	PK61M	KEY 7 X 7 X 30
723	PSS06M	SET SCREW M8-1.25 X 16

G9740/G9740Z/G9967/G9967Z/G9741/G9961

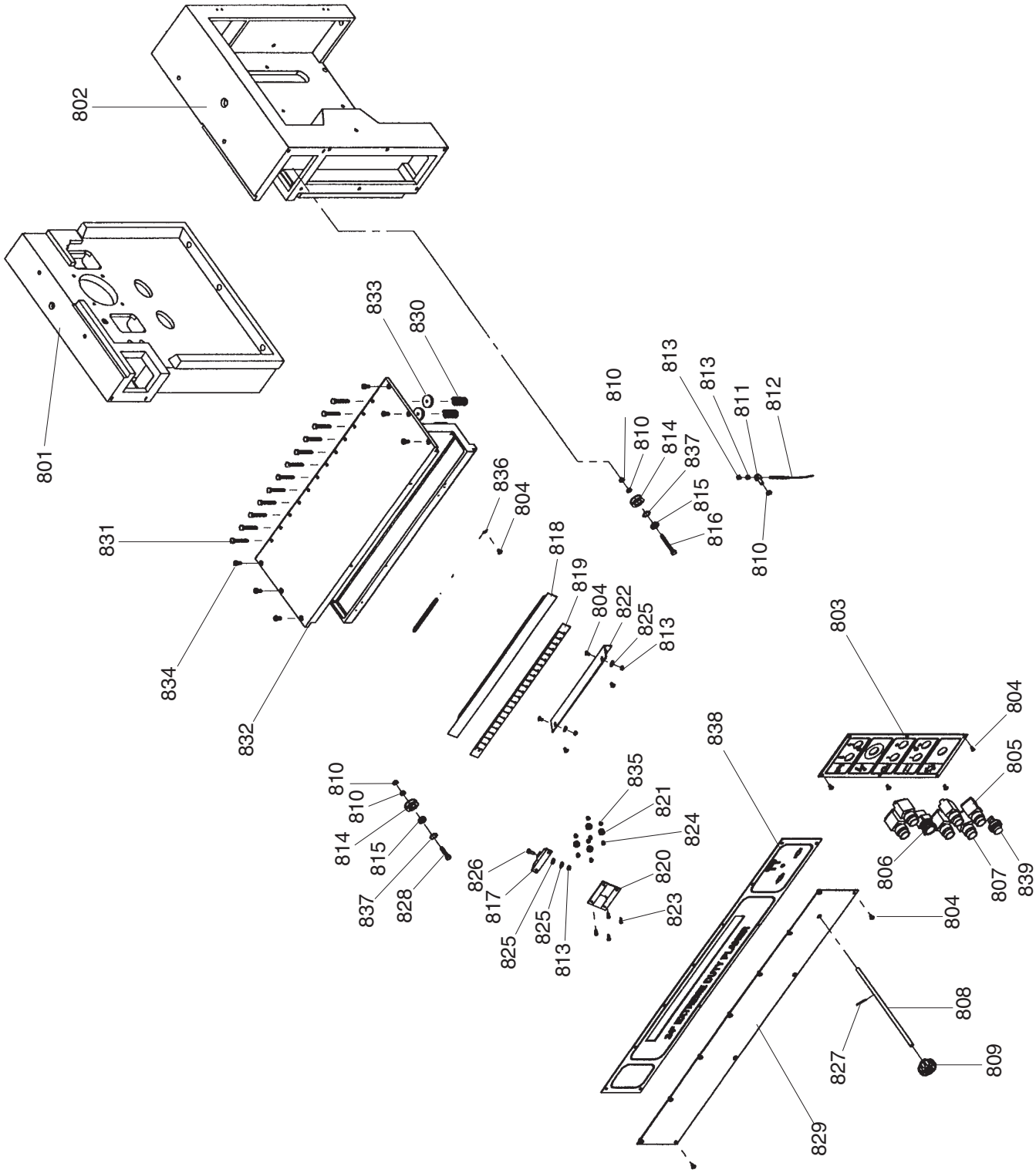

G9740/G9740Z/G9967/G9967Z/G9741/G9961

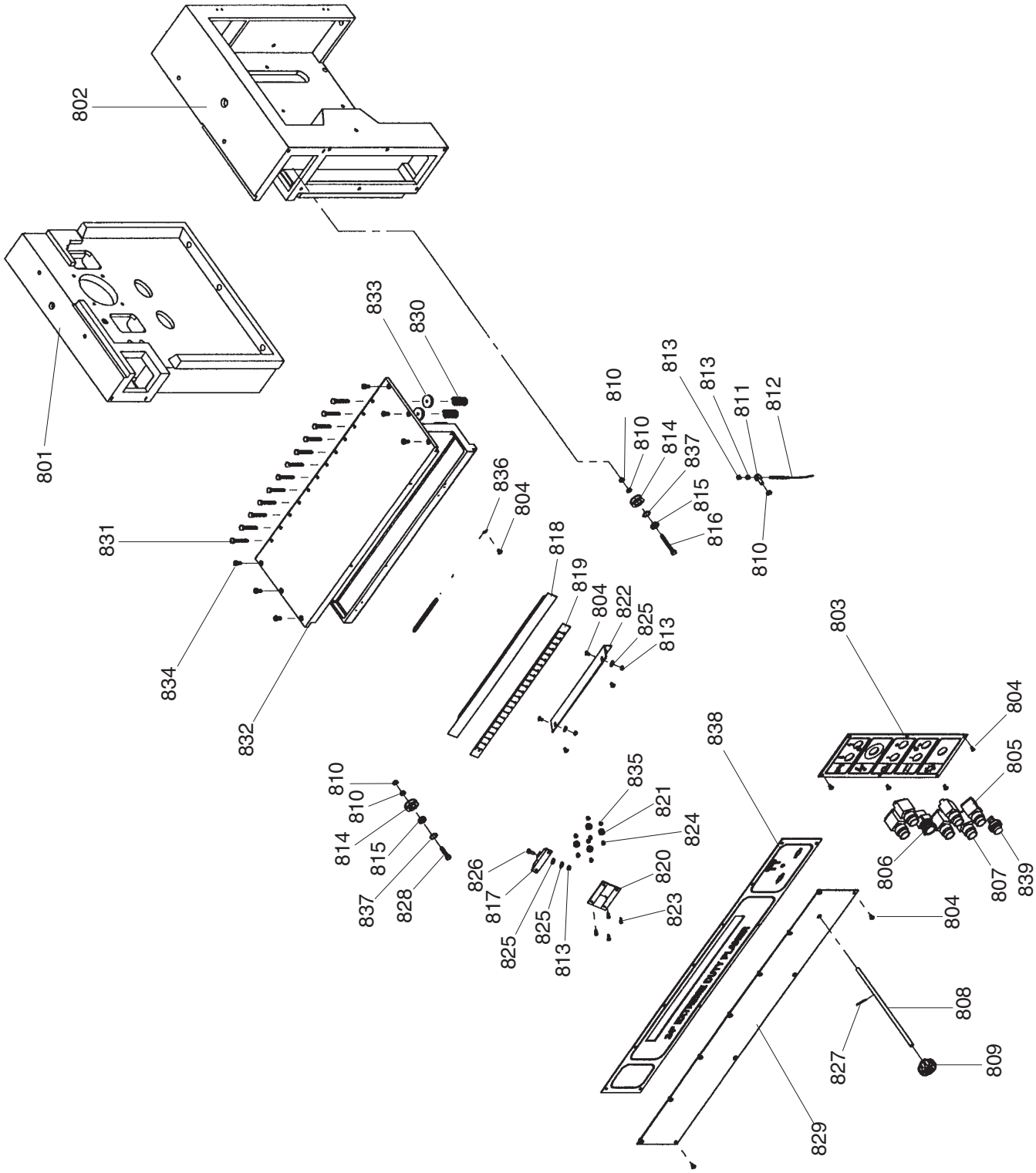

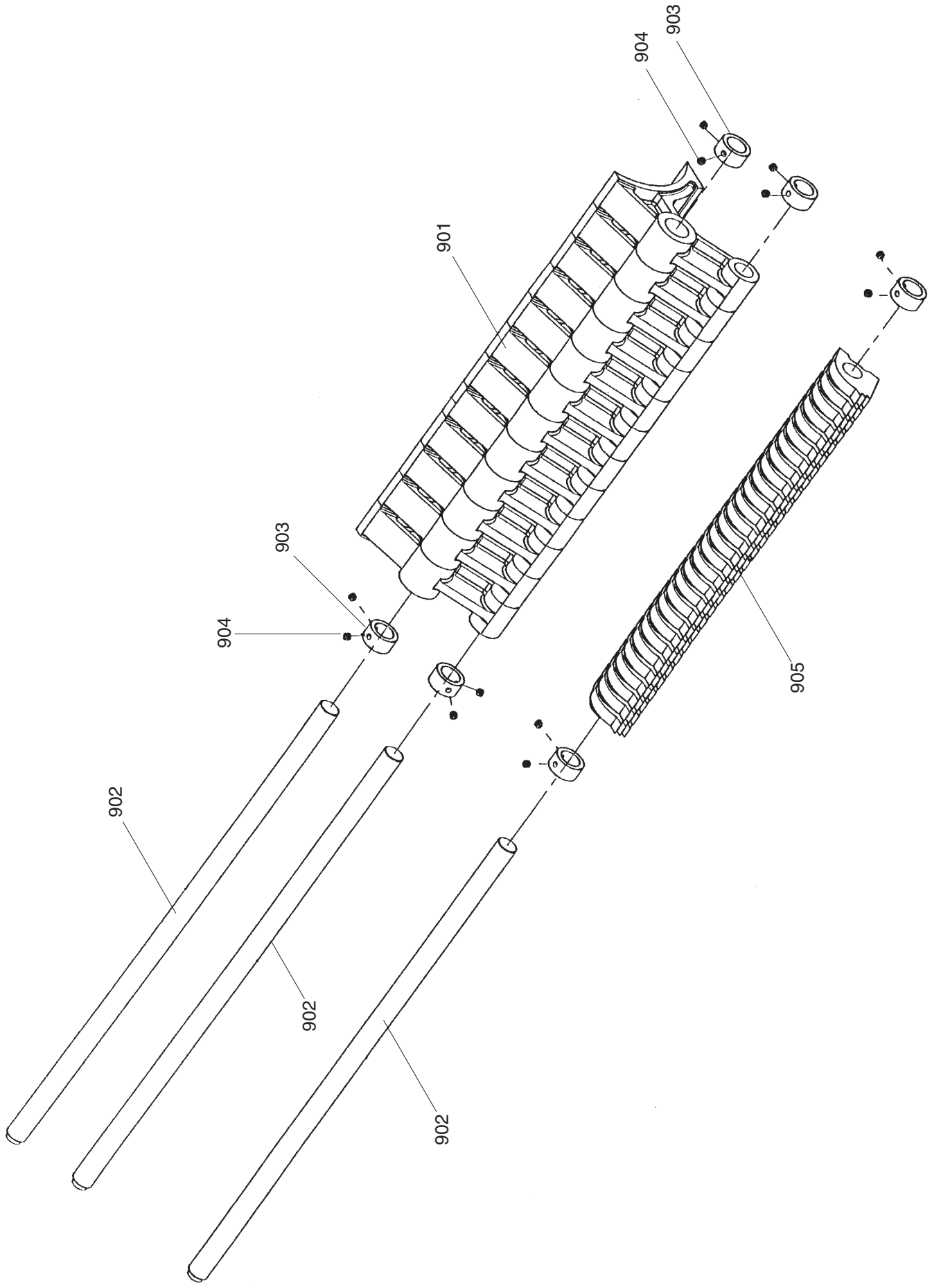
903
904
901
903
904
905
902
902
902

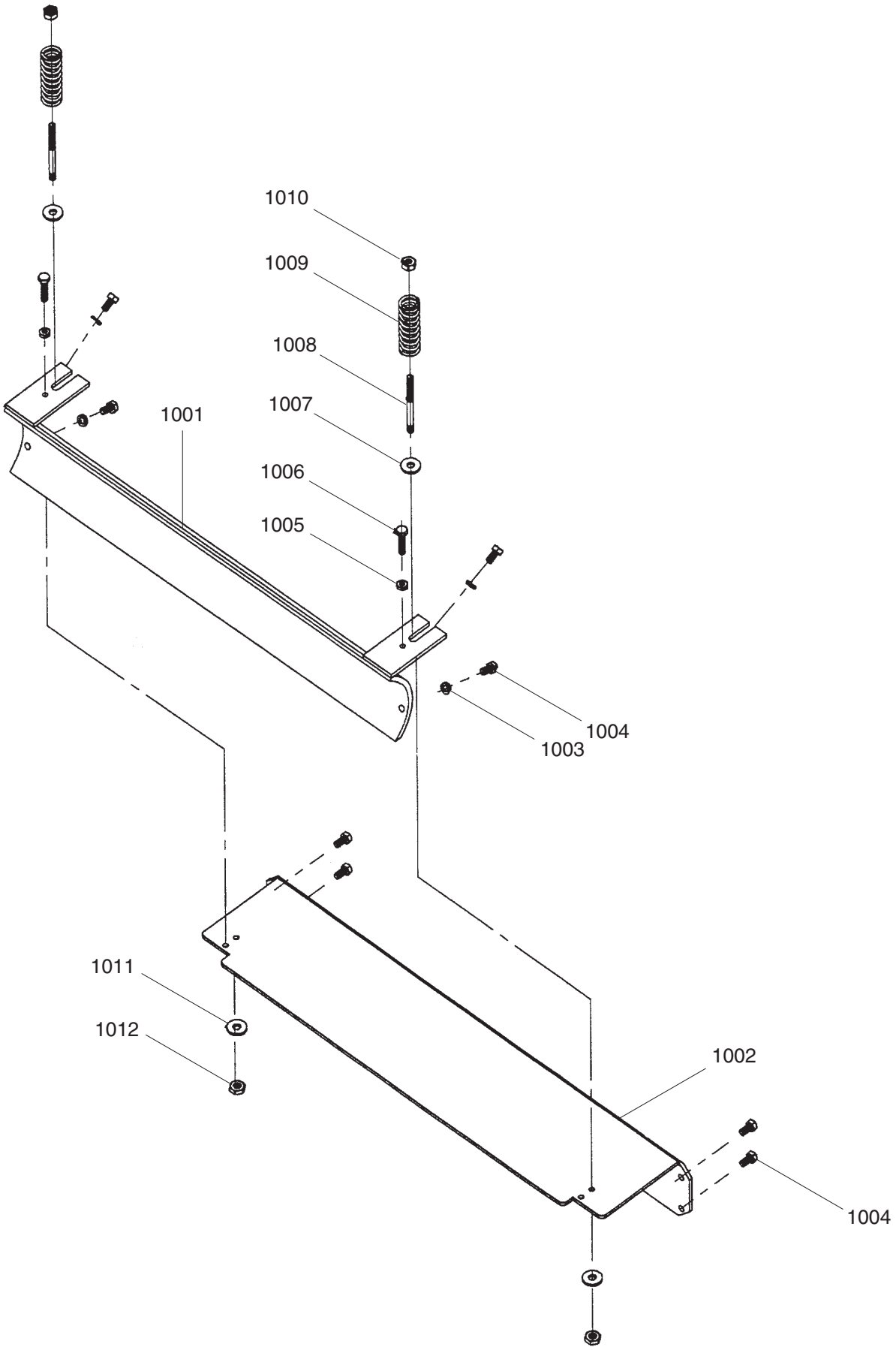
1010
1009
1008
1007
1001
1006
1005
1004
1003
1011
1012
1002
1004

REF	PART #	DESCRIPTION
801	P97400801	LEFT WALL THIN SHORT
802	P97400802	RIGHT WALL THICK SHORT
803	P97400803	SWITCH PLATE
804	PS65M	PHLP HD SCR M6-1 X 10
805	P97400805	PUSH-BUTTON SWITCH T1
806	P97400806	SWITCH RED
807	P97400807	PUSH-BUTTON SWITCH T2
808	P97400808	ELEVATION LOCK STUD
809	P97400809	KNOB M10 (FEMALE)
810	PN03M	HEX NUT M8-1.25
811	P97400811	GRADUATION STRUT
812	P97400812	SCALE ROPE
813	PN01M	HEX NUT M6-1
814	P97400814	PULLEY (L)
815	P608ZZ	BALL BEARING 608
816	PSB66M	CAP SCREW M8-1.25 X 65
817	P97400817	SCALE PLATE SUPPORT
818	P97400818	SCALE SUPPORT (20")
818	P97410818	SCALE SUPPORT (24")
819	P97400819	GRADUATED SCALE (20")
819	P97410819	GRADUATED SCALE (24")
820	P97400820	MOVABLE SCALE PLATE
821	P97400821	PULLEY (S)
822	P97400822	SCALE SUPPORT (20")
822	P97410822	SCALE SUPPORT (24")
823	PS30	PHLP HD SCR 5/32 X 1
824	P97400824	PULLEY FERRULE (S)
825	PW06	FLAT WASHER 1/4
826	P97400826	SCALE PLATE BOLT
827	P97400827	COTTER PIN 1/16 X 1
828	PB20M	HEX BOLT M8-1.25 X 35
829	P97400829	PROTECTION PLATE (20")
829	P97410829	PROTECTION PLATE (24")

REF	PART #	DESCRIPTION
830	P97400830	COMPRESS PAWL SPRING
831	PSB60M	CAP SCREW M8-1.25 X 55
832	P97400832	FRONT SEAT (20")
832	P97410832	FRONT SEAT (24")
833	P97400833	CLAW SPRING NUT
834	PSB11M	CAP SCREW M8-1.25 X 16
835	PN06M	HEX NUT M5-.8
836	P97400836	SCALE SPRING
837	PW01M	FLAT WASHER 8MM
838	P97400838	SCALE PLATE (20")
838	P97410838	SCALE PLATE (24")
839	P97400839	POWER LIGHT
901	P97400901	PAWL
902	P97400902	STOP PAWL SHAFT (20")
902	P97410902	STOP PAWL SHAFT (24")
903	P97400903	STOP PAWL FIXED RING
904	PSS17M	SET SCREW M8-1.25 X 6
905	P97400905	STOP PAWL
1001	P97401001	PRESSURE BAR (20")
1001	P97411001	PRESSURE BAR (24")
1002	P97401002	PROTECTION PLATE (20")
1002	P97411002	PROTECTION PLATE (24")
1003	PLW01	LOCK WASHER 5/16
1004	PB03M	HEX BOLT M8-1.25 X 16
1005	PN03M	HEX NUT M8-1.25
1006	PB20M	HEX BOLT M8-1.25 X 35
1007	PW02	FLAT WASHER 3/8
1008	P97401008	PISTON BOLT
1009	P97401009	HELICAL SPRING 80MM L
1010	PN08	HEX NUT 3/8-16
1011	PW02	FLAT WASHER 3/8
1012	PN08	HEX NUT 3/8-16

G9740/G9740Z/G9967/G9967Z/G9741/G9961

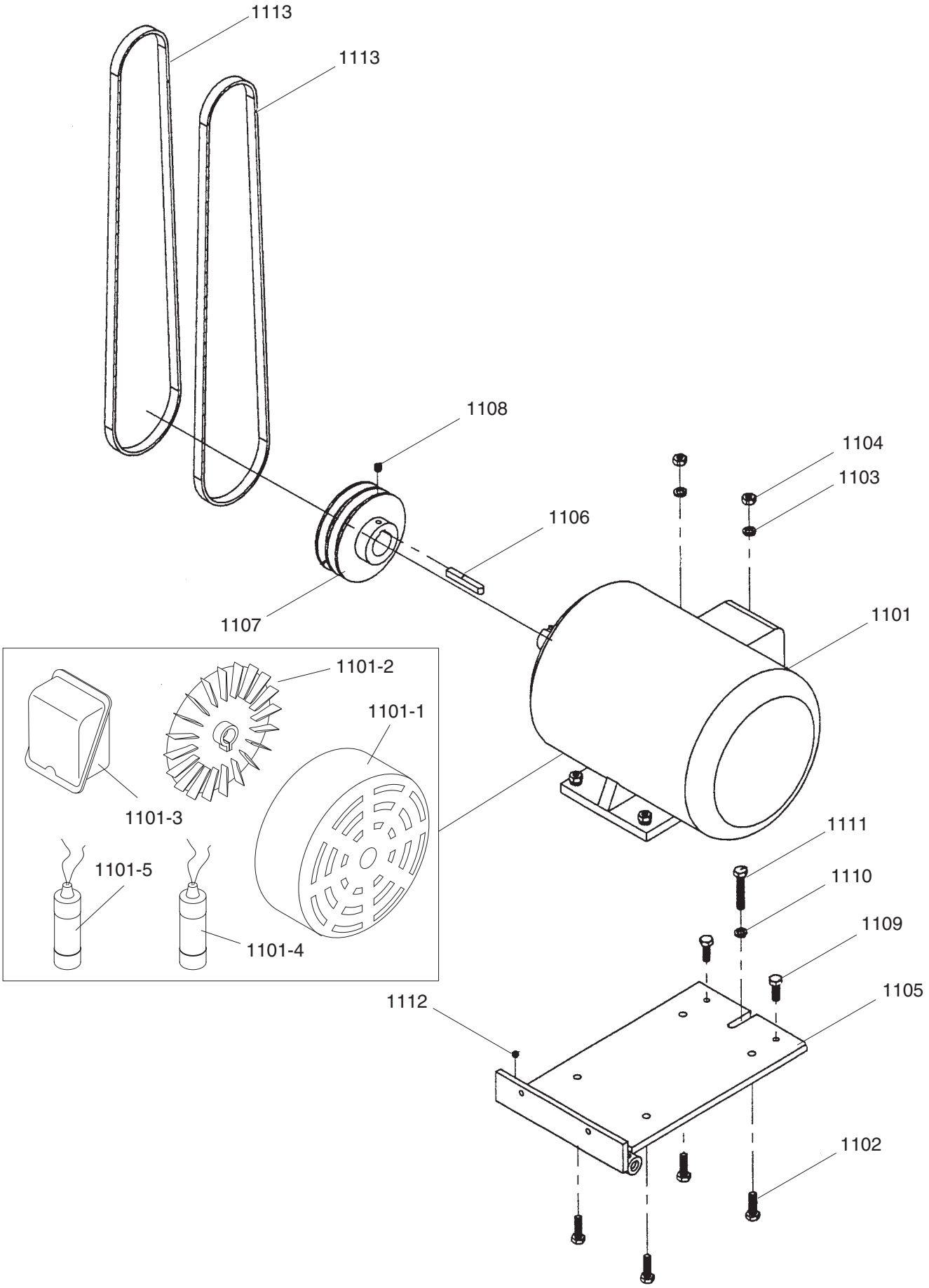

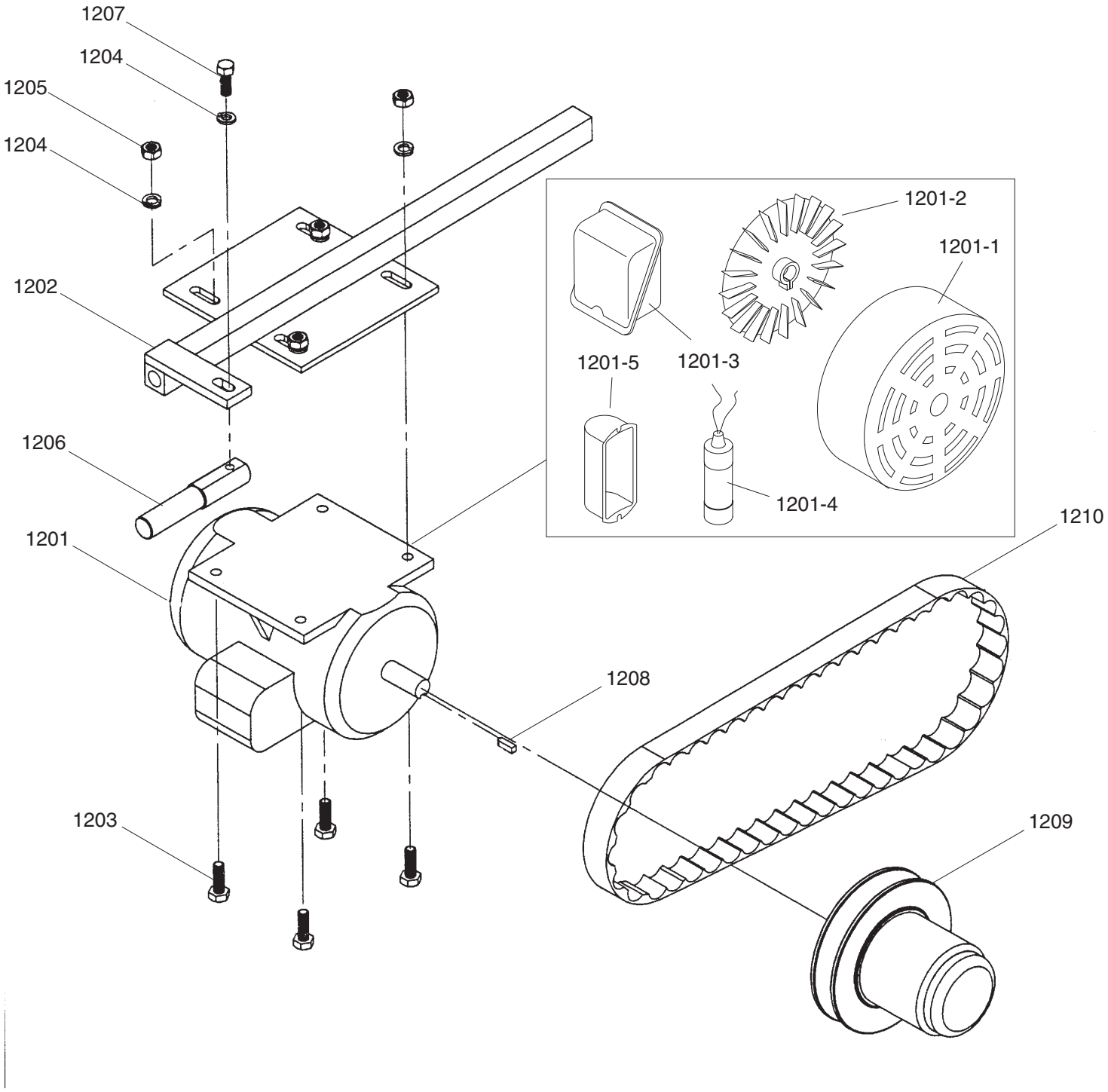
1207
1204
1205
1204
1202
1206
1201
1203
1201-2
1201-1
1201-5
1201-3
1201-4
1210
1208
1209

G9740/G9740Z/G9967/G9967Z/G9741/G9961

1101	P97401101	G9740/Z MOTOR 7.5HP,3Ø
1101	P99671101	G9967/Z MOTOR 5HP, 1Ø
1101	P97411101	G9741/61 MOTOR 10HP, 3Ø
1101-1	P97401101-1	G9740/Z MOTOR COVER
1101-1	P99671101-1	G9967/Z MOTOR COVER
1101-1	P97411101-1	G9741/61 MOTOR COVER
1101-2	P97401101-2	G9740/Z MOTOR FAN
1101-2	P99671101-2	G9967/Z MOTOR FAN
1101-2	P97411101-2	G9741/61 MOTOR FAN
1101-3	P97401101-3	G9740/Z WIRING BOX
1101-3	P99671101-3	G9967/Z WIRING BOX
1101-3	P97411101-3	G9741/61 WIRING BOX
1101-4	P99671101-4	G9967/Z START CAPACITOR
		250VAC, 800MFD
1101-5	P99671101-5	G9967/Z RUN CAPACITOR
		350VAC, 30MFD
1102	PB14M	HEX BOLT M10-1.5 X 35
1103	PLW06M	LOCK WASHER 10MM
1104	PN02M	HEX NUT M10-1.5
1105	P97401105	MOTOR PLATE
1106	PK78M	KEY 10 X 10 X 70
1107	P97401107	MOTOR PULLEY (2P, SMALL)
1108	PSS15	SET SCREW 3⁄8-16 X 3⁄8
1109	PB01M	HEX BOLT M10-1.5 X 30
1110	PLW04	LOCK WASHER 3⁄8

1111	P97401111	HEX BOLT M10-1.5 X 60
1112	PSS17M	SET SCREW M8-1.25 X 6
1113	PVB71	V-BELT B71
1201	P97401201	FEED MOTOR 1HP, 3Ø
1201	P99671201	FEED MOTOR 1HP, 1Ø
1201-1	P97401201-1	FEED MOTOR COVER, 3Ø
1201-1	P99671201-1	FEED MOTOR COVER, 1Ø
1201-2	P97401201-2	FEED MOTOR FAN, 3Ø
1201-2	P99671201-2	FEED MOTOR FAN, 1Ø
1201-3	P97401201-3	FD MTR WIRING BOX, 3Ø
1201-3	P99671201-3	FD MTR WIRING BOX, 1Ø
1201-4	P99671201-4	FEED MOTOR CAPACITOR
		250VAC, 25MFD
1201-5	P99671201-5	FD MTR CAPACITOR COVER
1202	P97401202	MOTOR SLIP SQUARE (20")
1202	P97411202	MOTOR SLIP SQUARE (24")
1203	PB01M	HEX BOLT M10-1.5 X 30
1204	PLW06M	LOCK WASHER 10MM
1205	PN02M	HEX NUT M10-1.5
1206	P97401206	SPEED CHANGE ROD
1207	PB18	HEX BOLT 3⁄8-16 X 1
1208	PK07M	KEY 6 X 6 X 20
1209	P97401209	SPEED CHANGE PULLEY
1210	P97401210	V-BELT 20X10X1085MM (3Ø)
1210	P99671210	V-BELT 14X22X420MM (1Ø)

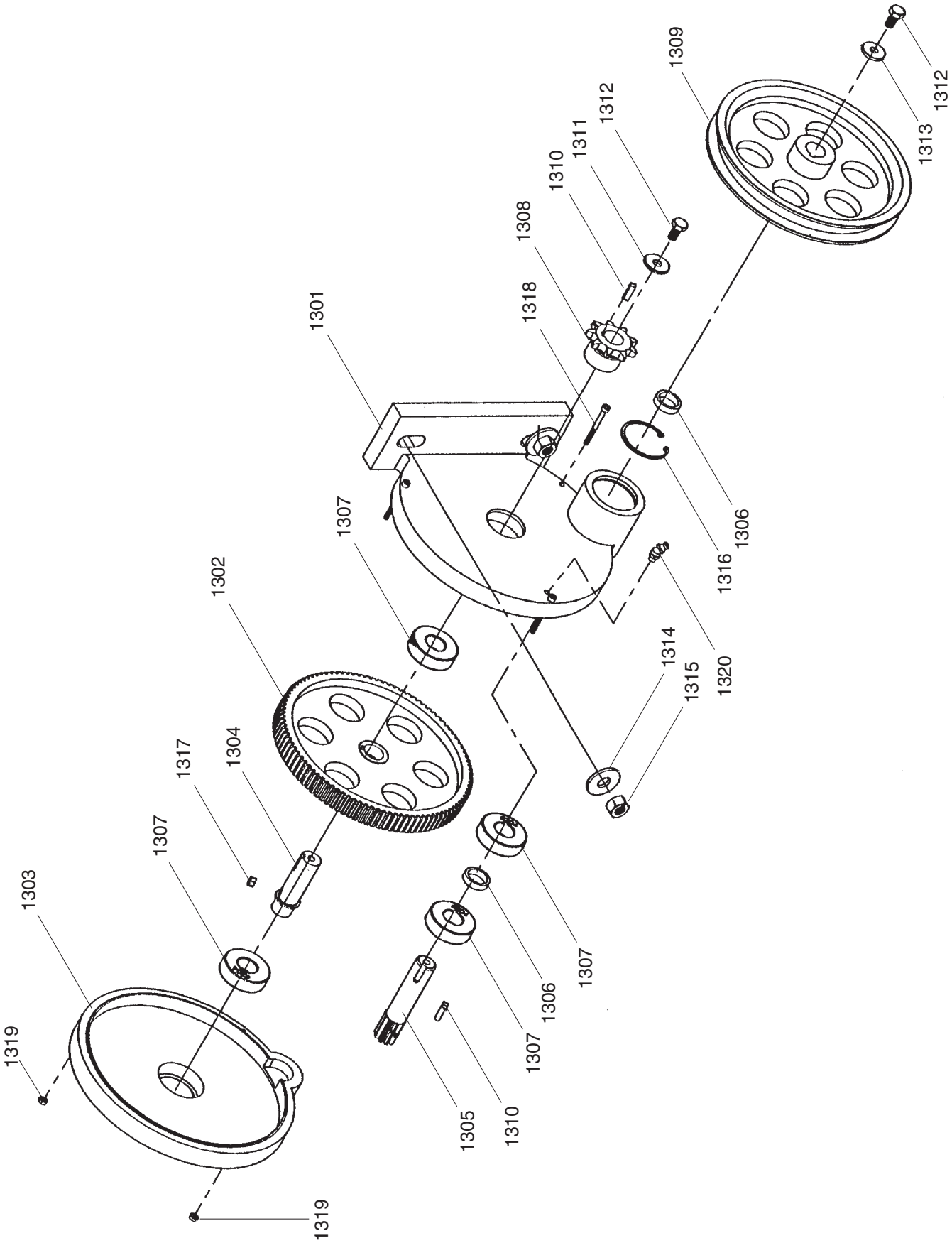
1309
1312
1313
1312
1311
1310
1308
1318
1301
1306
1316
1320
1314
1315
1307
1302
1304
1317
1307
1303
1319
1319
1307
1306
1307
1310
1305

G9740/G9740Z/G9967/G9967Z/G9741/G9961

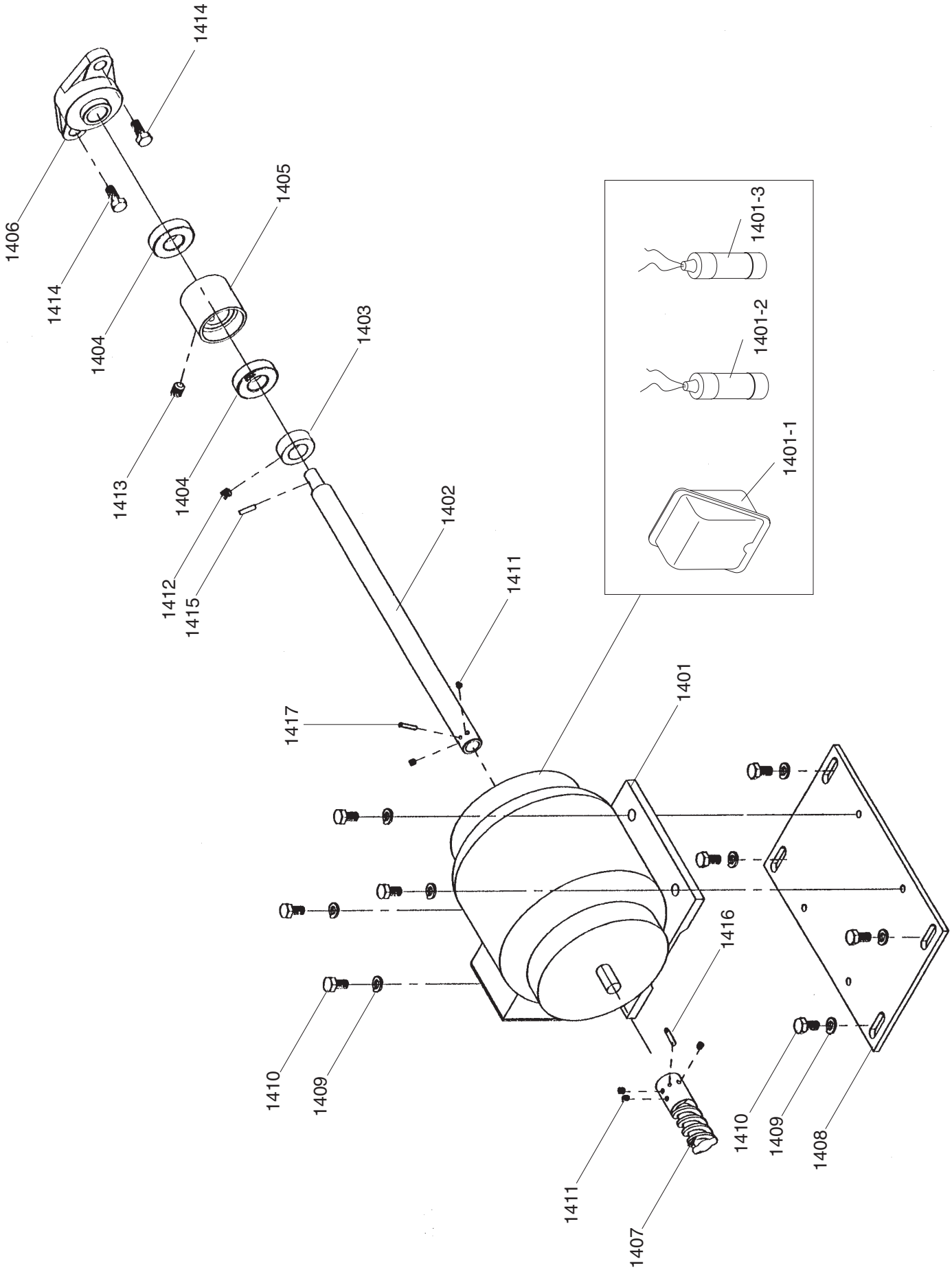

1301	P97401301	TRANSMISSION BOX
1302	P97401302	TRANSMISSION BOX GEAR
1303	P97401303	TRANSMISSION BOX CAP
1304	P97401304	TRANSMISSION SHAFT
1305	P97401305	GEAR SHAFT
1306	P97401306	BEARING SPACER
1307	P6204	BALL BEARING 6204
1308	P97401308	TRANSMISSION SPROCKET
1309	P97401309	TRANNY PULLEY 8” (3Ø)
1309	P99671309	TRANNY PULLEY 10” (1Ø)
1310	PK34M	KEY 5 X 5 X 20
1311	PW02	FLAT WASHER 3⁄8
1312	PB03M	HEX BOLT M8-1.25 X 16
1313	PW07	FLAT WASHER 5⁄16
1314	PW01	FLAT WASHER 1⁄2
1315	PN09M	HEX NUT M12-1.75
1316	PR25M	INT RETAINING RING 47MM
1317	PK06M	KEY 5 X 5 X 10
1318	PB77M	HEX BOLT M4-.7 X 45
1319	PN04M	HEX NUT M4-.7
1320	PZERK3	GREASE FITTING 1⁄8
1401	P97401401	ELEV MOTOR 1⁄2HP, 3Ø
1401	P99671401	ELEV MOTOR 1⁄2HP, 1Ø

1401-1	P97401401-1	EL MTR WIRING BOX, 3Ø
1401-1	P99671401-1	EL MTR WIRING BOX, 1Ø
1401-2	P99671401-2	ELEV START CAPACITOR
		125VAC, 200MFD
1401-3	P99671401-3	ELEV RUN CAPACITOR
		250VAC, 20MFD
1402	P97401402	SHORT ELEVATION ROD
1403	P97401403	ELEVATION COLLAR
1404	P6004	BALL BEARING 6004
1405	P97401405	BEARING HOUSING
1406	P97401406	BEARING UCFL 204-20
1407	P97401407	LIFTING MOTOR WORM
1408	P97401408	LIFTING MOTOR PLATE
1409	PLW01	LOCK WASHER 5⁄16
1410	PB03M	HEX BOLT M8-1.25 X 16
1411	PSS13M	SET SCREW M10-1.5 X 12
1412	PSS20M	SET SCREW M8-1.25 X 8
1413	PSS13M	SET SCREW M10-1.5 X 12
1414	PB09M	HEX BOLT M8-1.25 X 20
1415	PRP60M	ROLL PIN 4 X 15
1416	PRP56M	ROLL PIN 4 X 25
1417	PRP39M	ROLL PIN 4 X 20

G9740/G9740Z/G9967/G9967Z/G9741/G9961

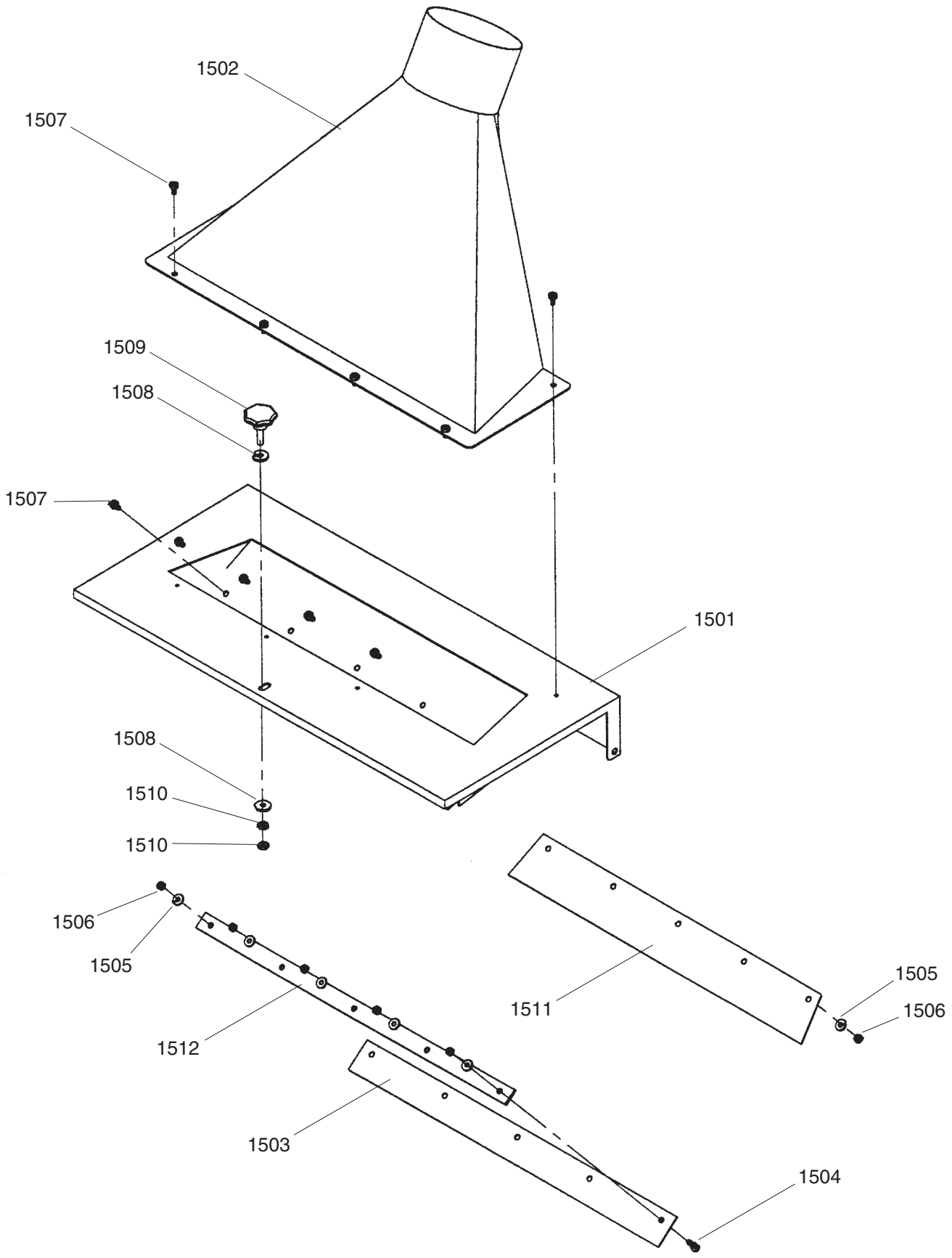

G9740/G9967/G9741 4-Knife Cutterhead

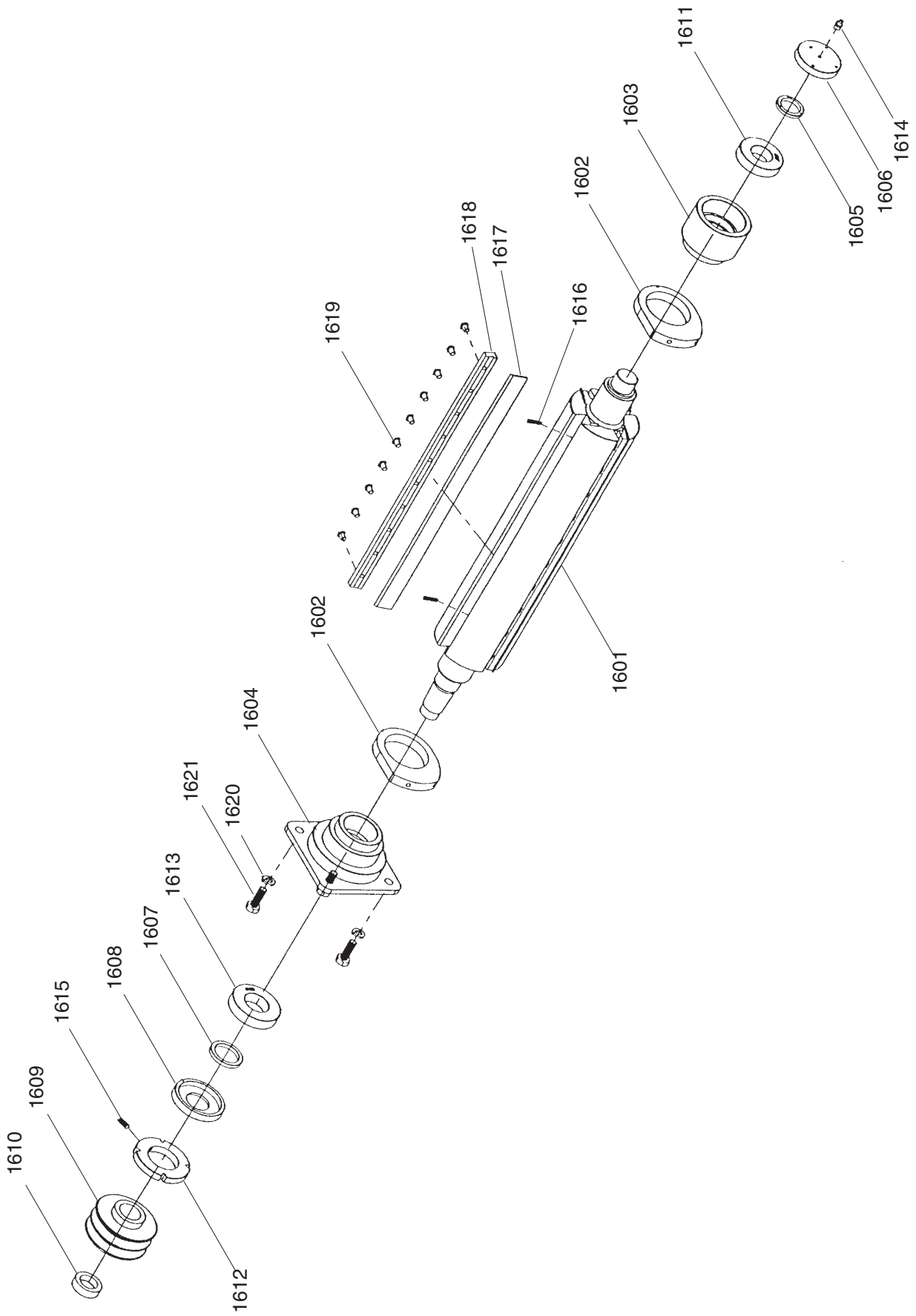

G9740Z/G9967Z/G9961 Spiral Cutterhead

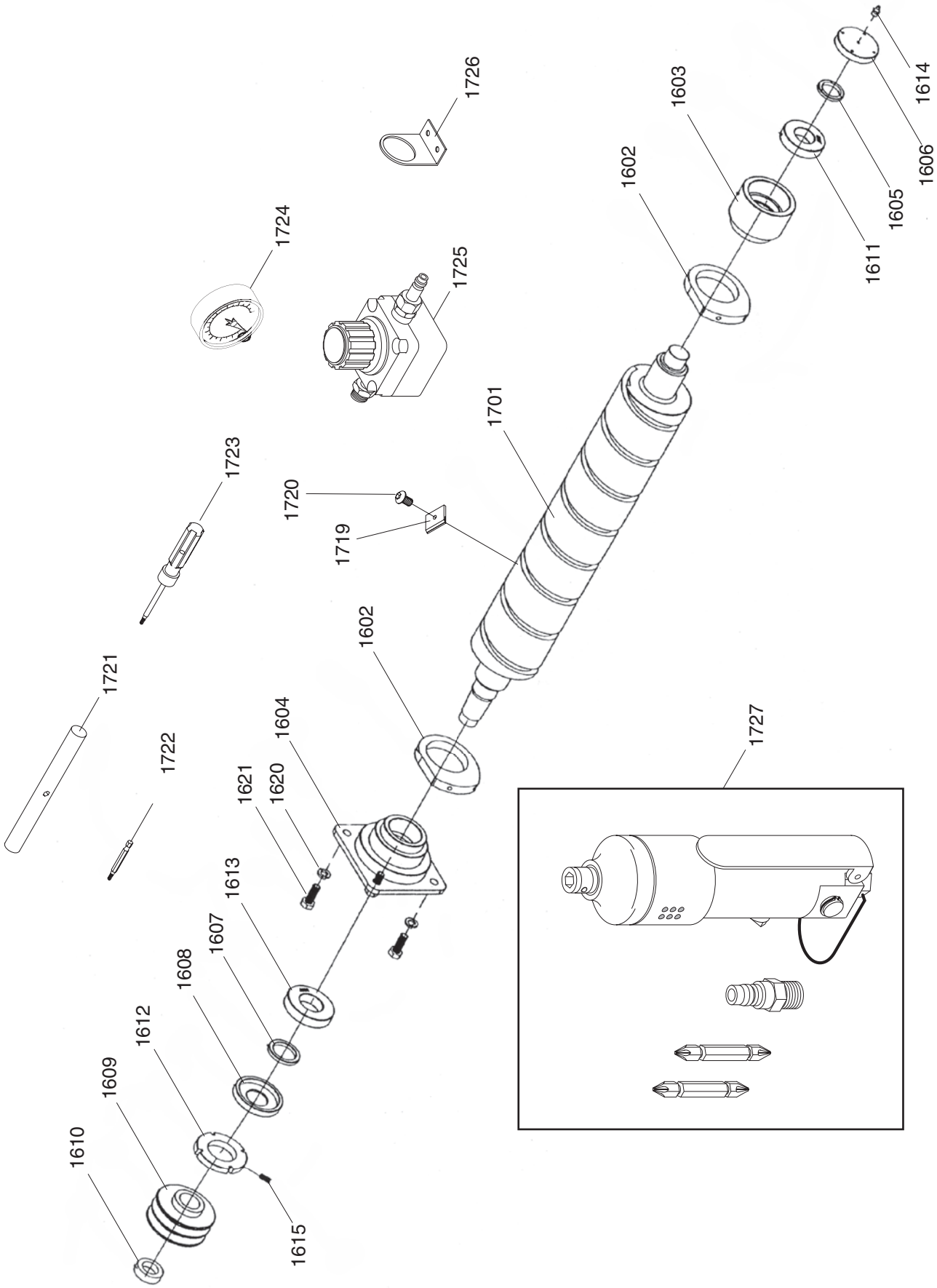

REF	PART #	DESCRIPTION
1501	P97401501	DISCHARGE COVER (20")
1501	P97411501	DISCHARGE COVER (24")
1502	P97401502	DUST PORT (20")
1502	P97411502	DUST PORT (24")
1503	P97401503	RUBBER SEAL (20")
1503	P97411503	RUBBER SEAL (24")
1504	PS26M	PHLP HD SCR M6-1 X 20
1505	PW06	FLAT WASHER 1⁄4
1506	PN01M	HEX NUT M6-1
1507	PS65M	PHLP HD SCR M6-1 X 10
1508	PW07	FLAT WASHER 5⁄16
1509	P97401509	KNOB BOLT M8-1.25 X 30
1510	PN03M	HEX NUT M8-1.25
1511	P97401511	MUFFLE PLATE (20")
1511	P97411511	MUFFLE PLATE (24")
1512	P97401512	RUBBER SEAL PLATE (20")
1512	P97411512	RUBBER SEAL PLATE (24")
1601	P97401601	CUTTERHEAD (20")
1601	P97411601	CUTTERHEAD (24")
1602	P97401602	PISTON RING
1603	P97401603	SMALL CUTTERHEAD CASE
1604	P97401604	LARGE CUTTERHEAD CASE
1605	P97401605	SMALL BEARING RING
1606	P97401606	SMALL CASE COVER
1607	P97401607	LARGE CASE
1608	P97401608	LARGE CASE COVER

REF	PART #	DESCRIPTION
1609	P97401609	CUTTERHEAD PULLEY
1610	P97401610	CUTTERHEAD PULLY NUT
1611	P6207	BALL BEARING 6207
1612	P97401612	CUTTERHEAD STOP PLATE
1613	P6208	BALL BEARING 6208
1614	PZERK3	GREASE FITTING 1⁄8
1615	PSS18	SET SCREW 5⁄16-18 X 3⁄4
1616	P97401616	COMPRESSION SPRING
1617	H2340	KNIFE SET OF 4 (20")
1617	H2342	KNIFE SET OF 4 (24")
1618	P97401618	GIB (20")
1618	P97411618	GIB (24")
1619	P97401619	GIB BOLTS
1620	PLW05M	LOCK WASHER 12MM
1621	PB75M	HEX BOLT M12-1.75 X 35
1701	P9740Z1701	SPIRAL FLAT CUTTERHEAD
1701	P99611701	SPIRAL FLAT CUTTERHEAD
1719	H2334	INDEXABLE CUTTERS
1720	PFH35M	FLAT HD TORX T-20 M6 X 15
1721	P9740Z1721	CHEATER BAR FOR T-20 BIT
1722	P9740Z1722	T-20 TORX BIT
1723	P9740Z1723	T-20 TORX DRIVER
1724	P9740Z1724	PRESSURE GAUGE FOR KIT
1725	P9740Z1725	REDUCING VALVE FOR KIT
1726	P9740Z1726	L-BRACKET
1727	P9740Z1727	AIR SCREWDRIVER KIT

Motors
Voltage Diagram
220 Volt Single Phase

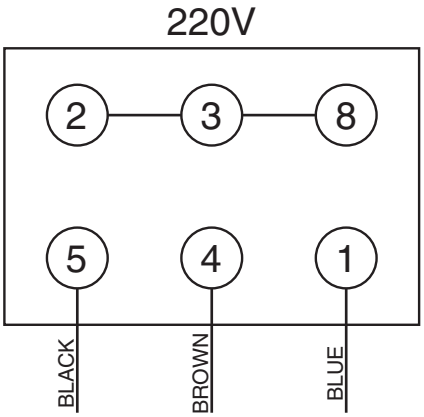

TABLE MOTOR

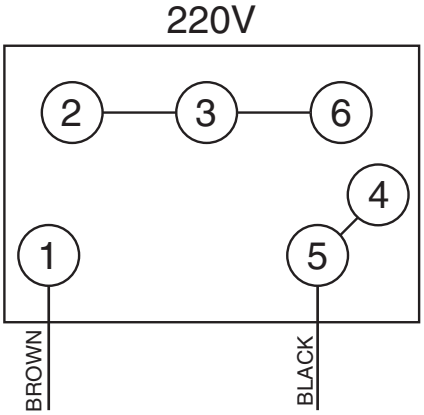

FEED ROLLER MOTOR

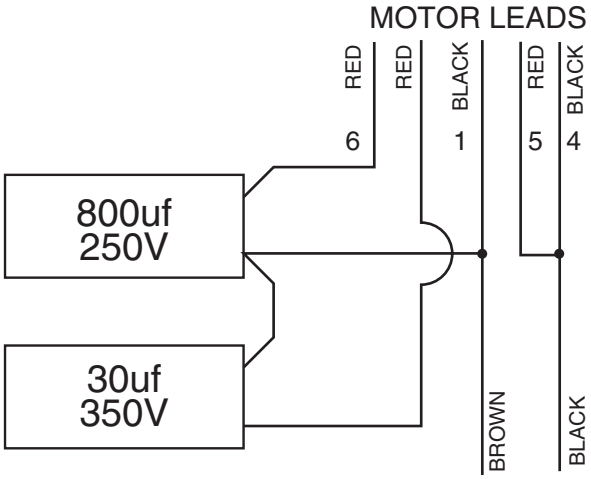

CUTTER HEAD MOTOR

DANGER

Disconnect machine from power before performing any electrical service. Failure to do this will result in a shock hazard leading to injury or death.

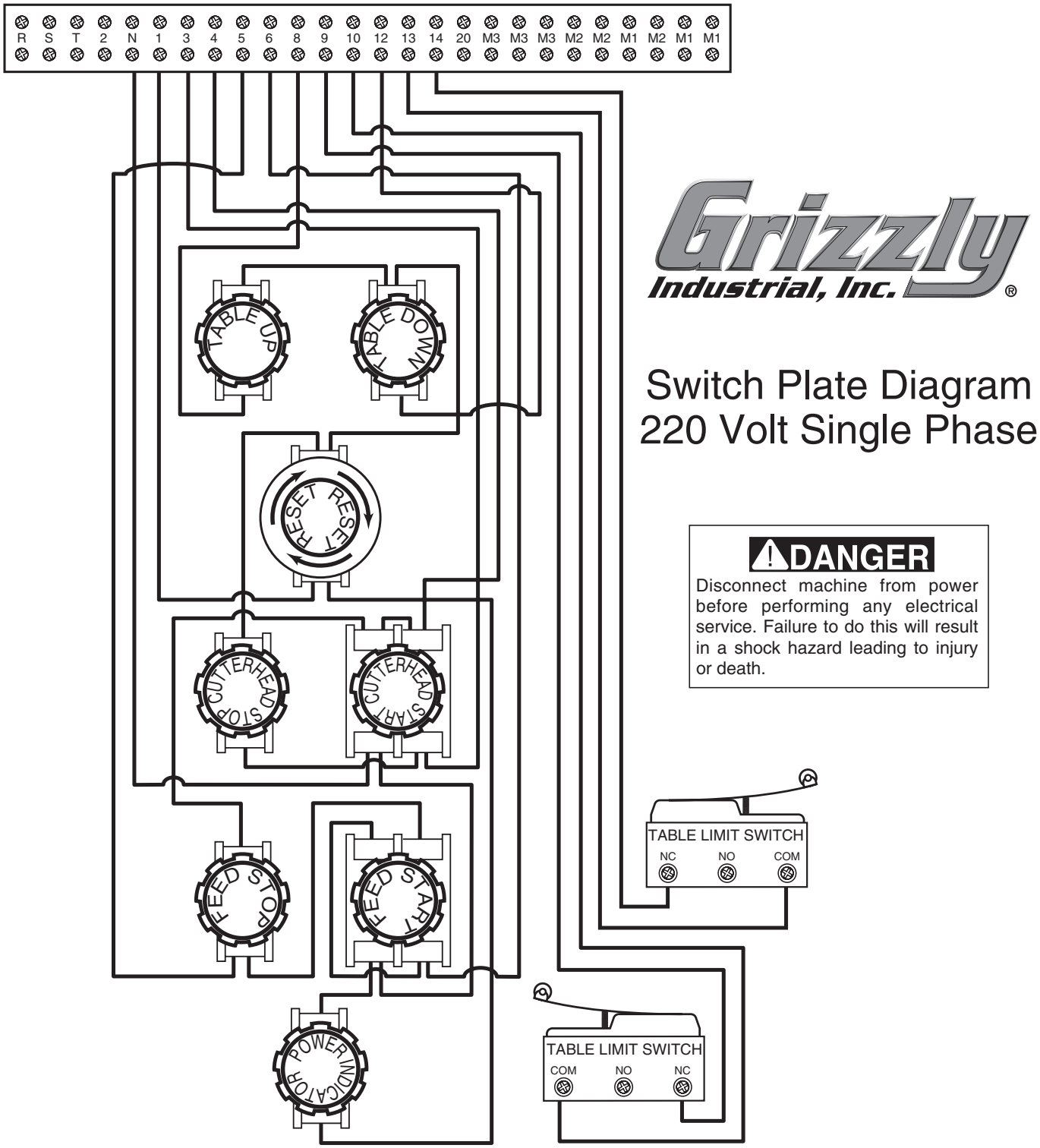

Grizzly Industrial, Inc.®

Switch Plate Diagram
220 Volt Single Phase

⚠DANGER

Disconnect machine from power before performing any electrical service. Failure to do this will result in a shock hazard leading to injury or death.

Main Hook Up Panel
220 Volt Single Phase

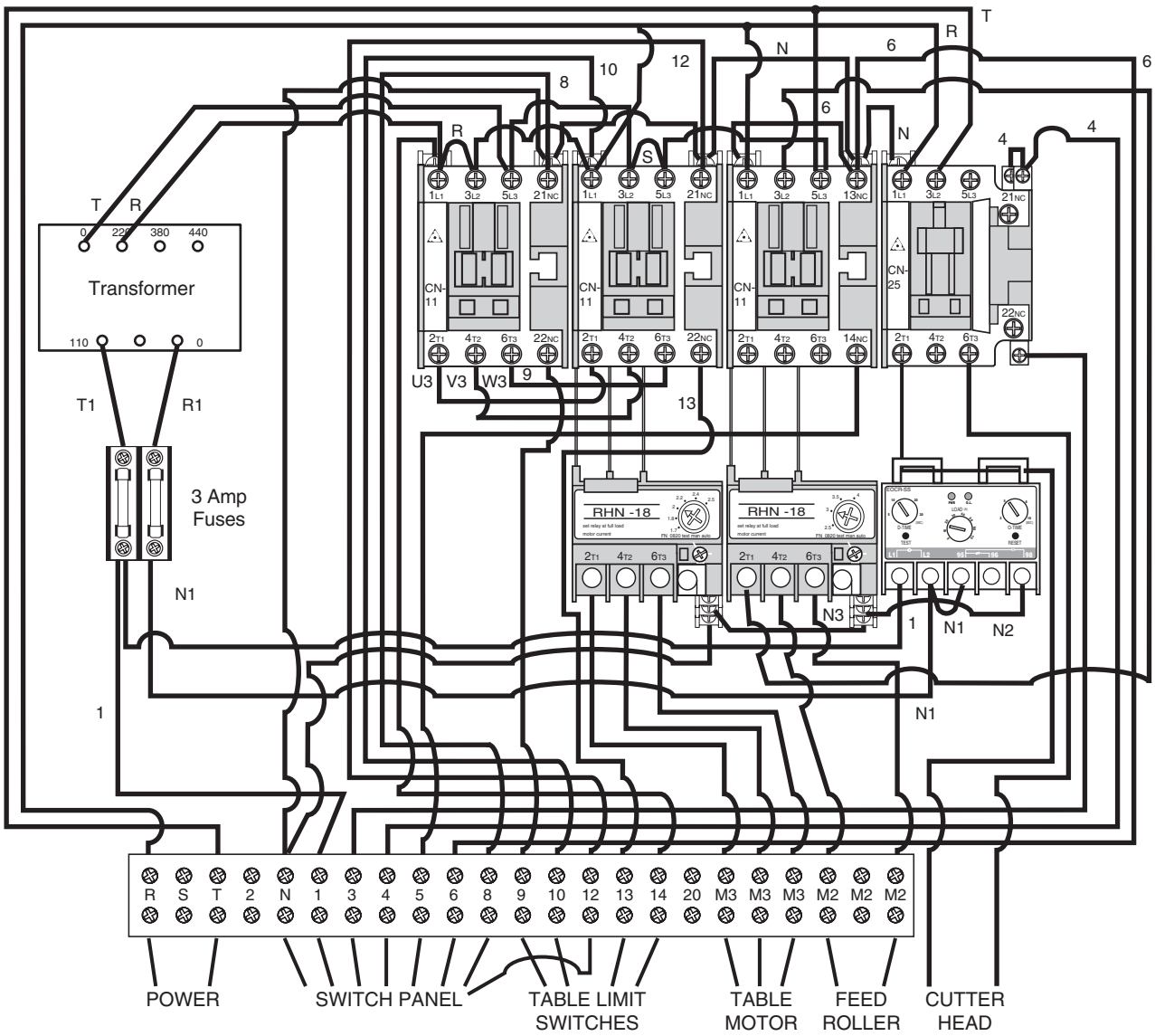

⚠DANGER

Disconnect power from machine before performing any electrical service. Failure to do this will result in a shock hazard leading to injury or death.

G9740/G9740Z

Motors
Voltage Conversion
220 Volt 3-Phase

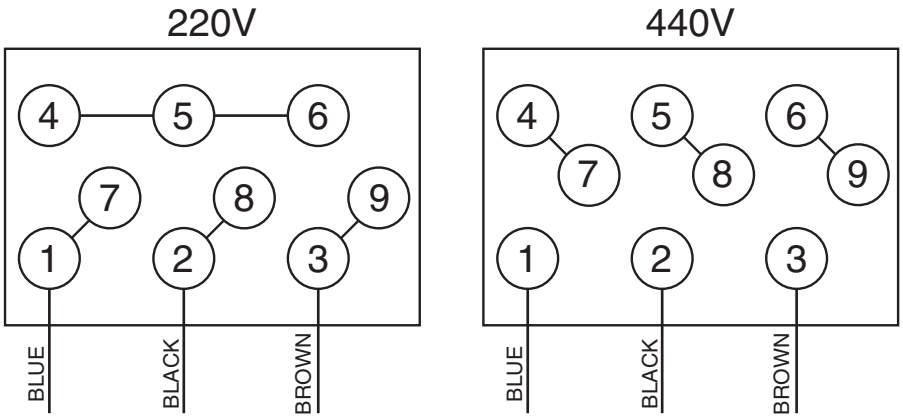

TABLE MOTOR

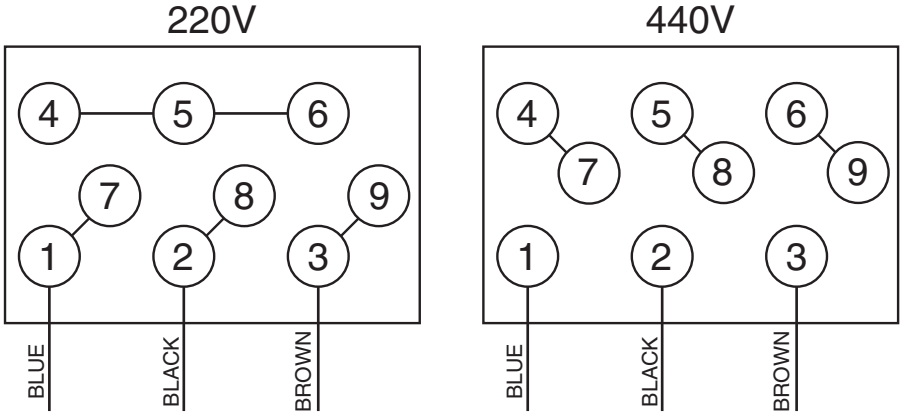

FEED ROLLER MOTOR

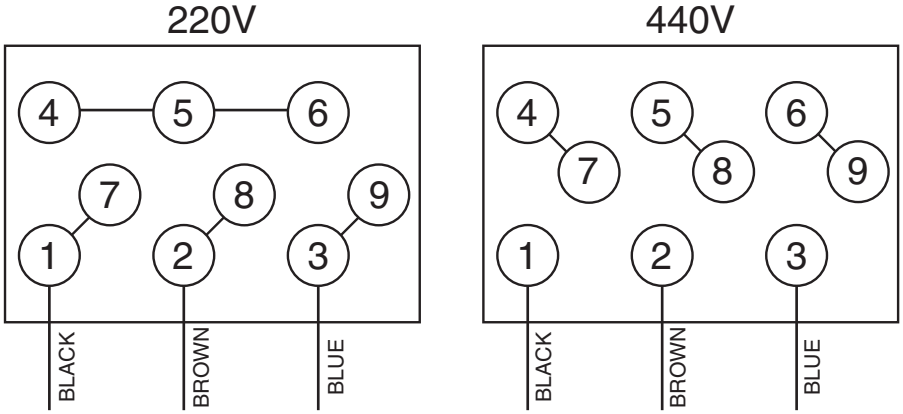

CUTTER HEAD MOTOR

⚠DANGER

Disconnect power from machine before performing any electrical service. Failure to do this will result in a shock hazard leading to injury or death.

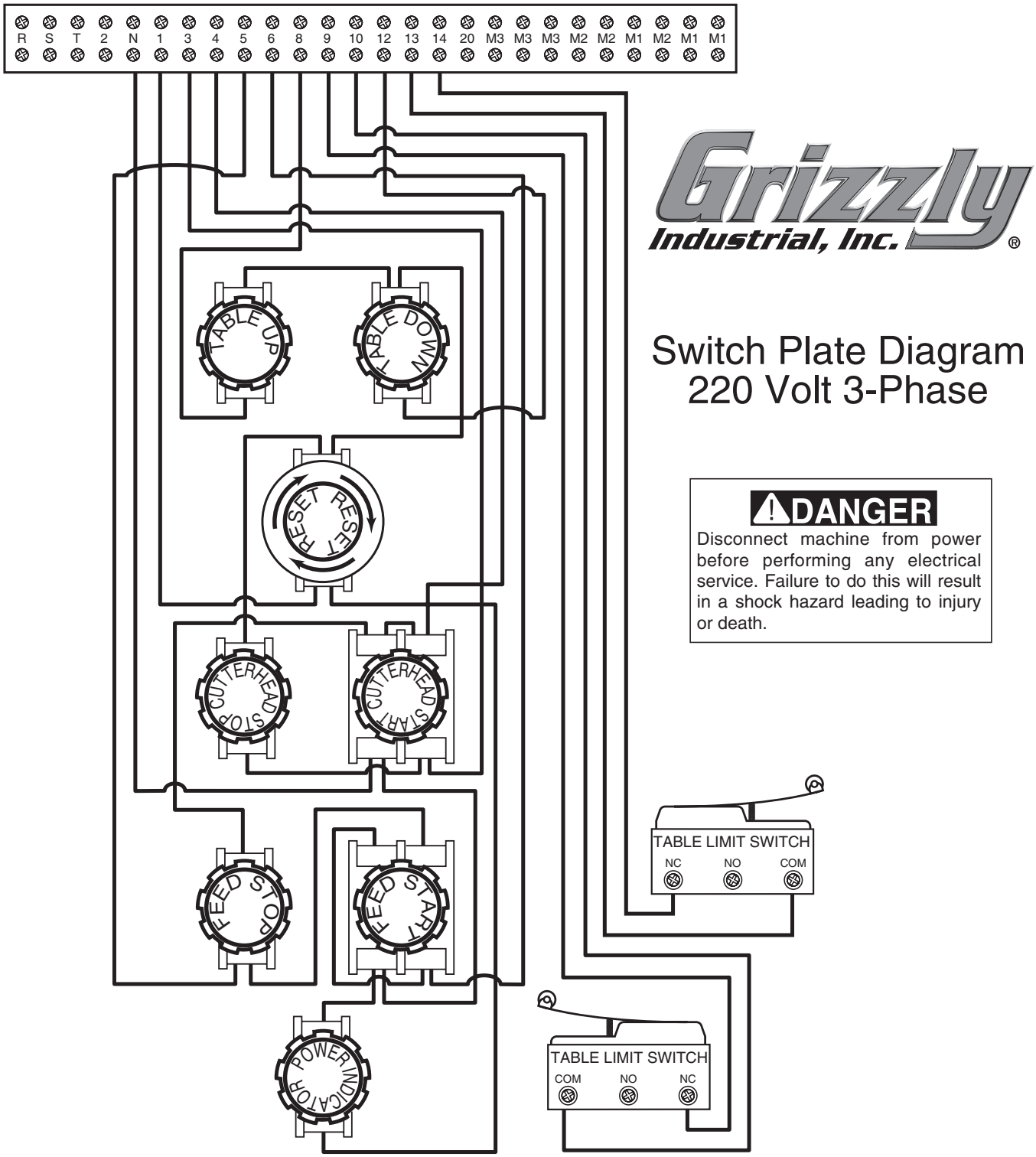

Grizzly Industrial, Inc.®

Switch Plate Diagram 220 Volt 3-Phase

DANGER

Disconnect machine from power before performing any electrical service. Failure to do this will result in a shock hazard leading to injury or death.

Grizzly Industrial, Inc.®

Main Hook Up Panel
220 Volt 3-Phase

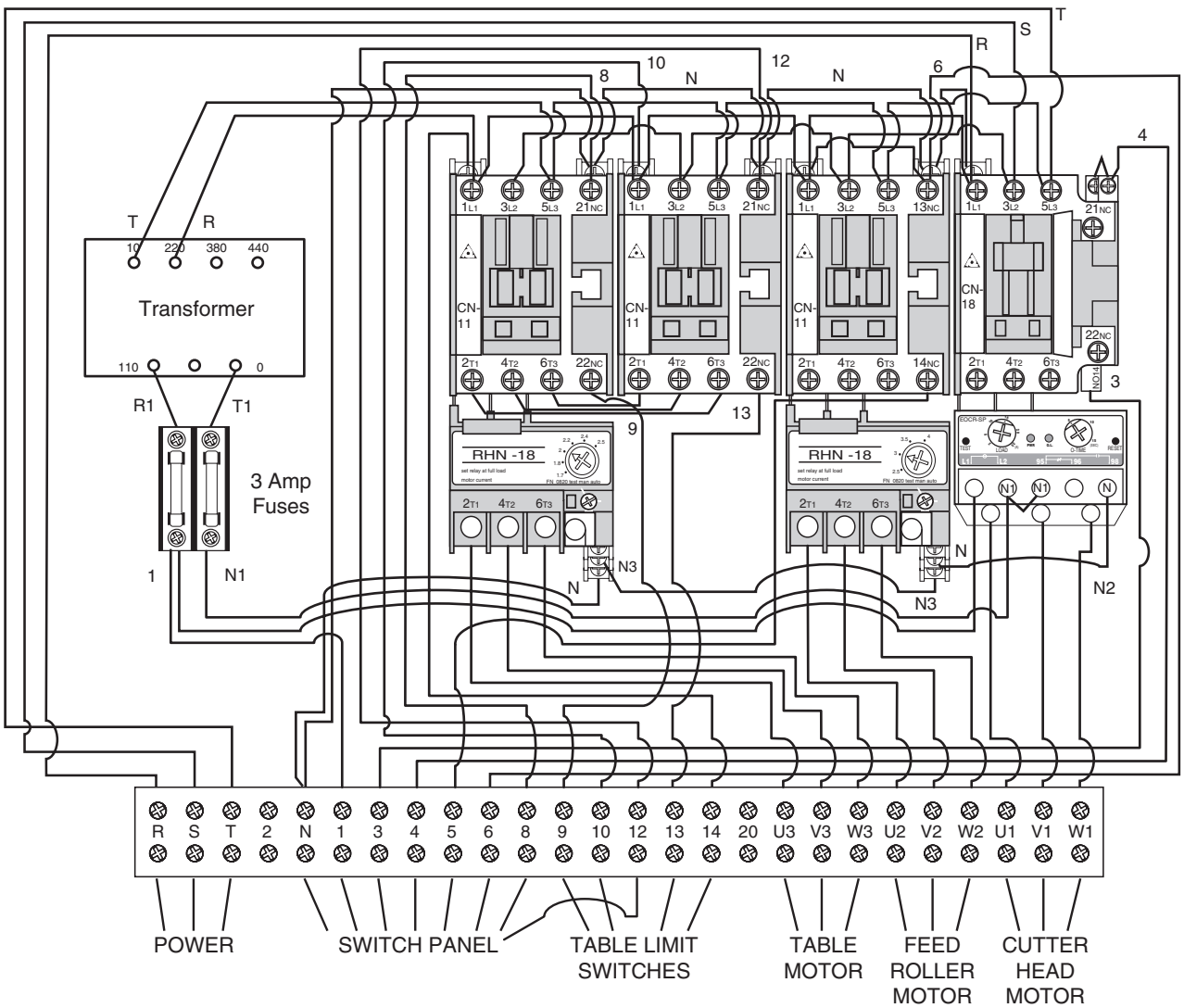

⚠DANGER

Disconnect machine from power performing any electrical service. Failure to do this will result in a shock hazard leading to injury or death.

Motors
Voltage Conversion
220V to 440V, 3-Phase

220V

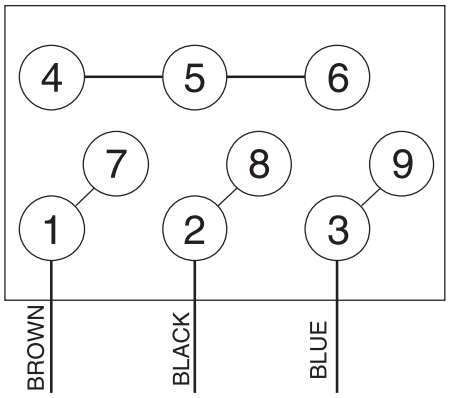

440V

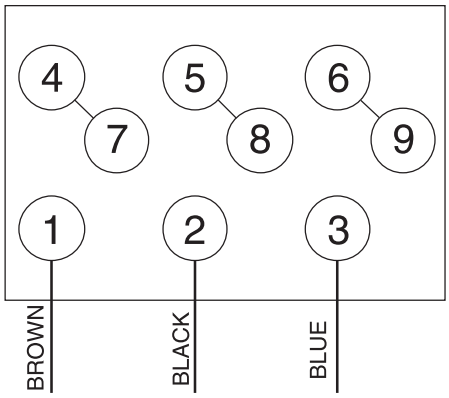

TABLE MOTOR

220V

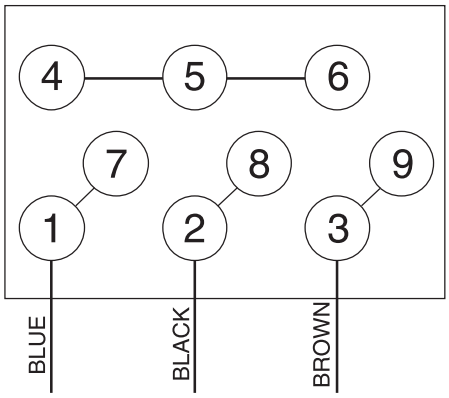

440V

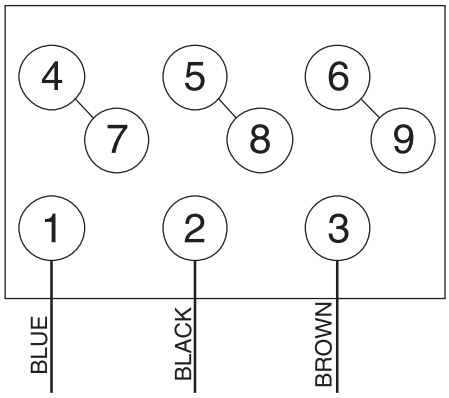

FEED ROLLER MOTOR

220V

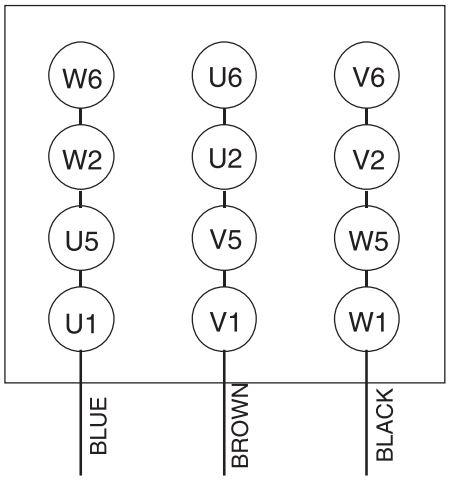

440V

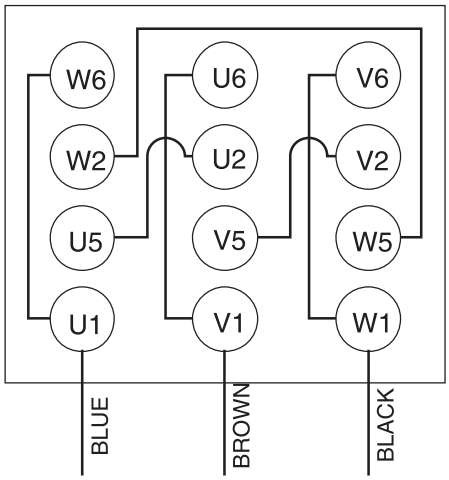

CUTTER HEAD MOTOR

DANGER
Disconnect power from machine before performing any electrical service. Failure to do this will result in a shock hazard leading to injury or death.

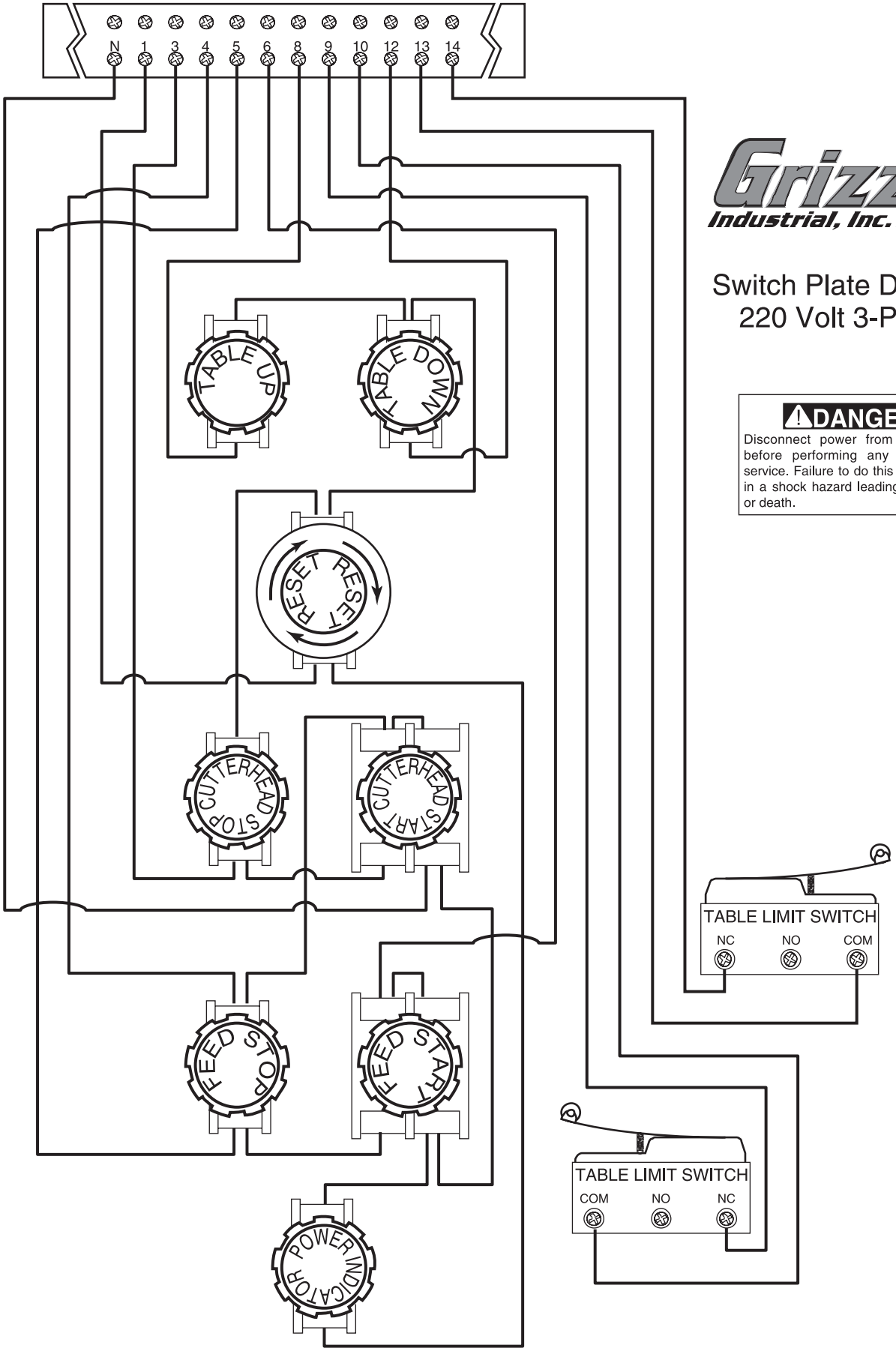

Grizzly Industrial, Inc.

Switch Plate Diagram
220 Volt 3-Phase

DANGER
Disconnect power from machine before performing any electrical service. Failure to do this will result in a shock hazard leading to injury or death.

Main Hook Up Panel
220 Volt 3-Phase

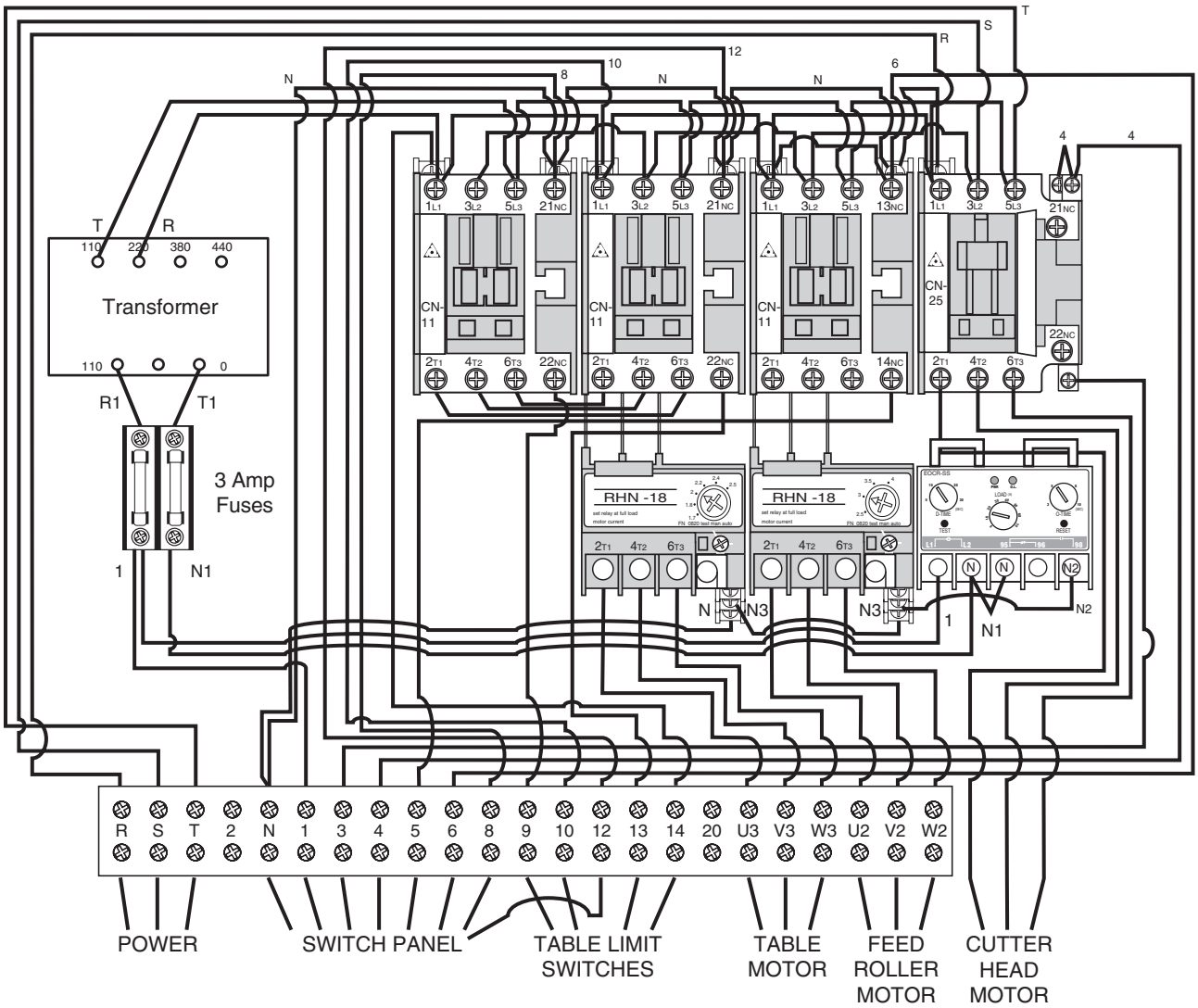

DANGER

Disconnect machine from power before performing any electrical service. Failure to do this will result in a shock hazard leading to injury or death.

Warranty and Returns

Grizzly Industrial, Inc. warrants every product it sells for a period of **1 year** to the original purchaser from the date of purchase. This warranty does not apply to defects due directly or indirectly to misuse, abuse, negligence, accidents, repairs or alterations or lack of maintenance. This is Grizzly's sole written warranty and any and all warranties that may be implied by law, including any merchantability or fitness, for any particular purpose, are hereby limited to the duration of this written warranty. We do not warrant or represent that the merchandise complies with the provisions of any law or acts unless the manufacturer so warrants. In no event shall Grizzly's liability under this warranty exceed the purchase price paid for the product and any legal actions brought against Grizzly shall be tried in the State of Washington, County of Whatcom.

We shall in no event be liable for death, injuries to persons or property or for incidental, contingent, special, or consequential damages arising from the use of our products.

To take advantage of this warranty, contact us by mail or phone and give us all the details. We will then issue you a "Return Number,'' which must be clearly posted on the outside as well as the inside of the carton. We will not accept any item back without this number. Proof of purchase must accompany the merchandise.

The manufacturers reserve the right to change specifications at any time because they constantly strive to achieve better quality equipment. We make every effort to ensure that our products meet high quality and durability standards and we hope you never need to use this warranty.

Please feel free to write or call us if you have any questions about the machine or the manual.

Thank you again for your business and continued support. We hope to serve you again soon.

WARRANTY CARD

Name_____

Street_____

City _____ State_____Zip_____

Phone Number_____E-Mail_____FAX_____

MODEL #_____Serial#_____Order #_____

The following information is given on a voluntary basis. It will be used for marketing purposes to help us develop better products and services. Of course, all information is strictly confidential.

1. How did you learn about us?

___Advertisement
___Catalog
___Friend
___World Wide Web

___Other_____

2. Which of the following magazines do you subscribe to.

___American Woodworker
___Cabinetmaker
___Family Handyman
___Fine Homebuilding
___Fine Woodworking
___Home Handyman
___Journal of Light Construction
___Old House Journal
___Popular Mechanics
___Popular Science
___Popular Woodworking
___Practical Homeowner
___Shop Notes
___Today's Homeowner
___WOOD
___Wooden Boat
___Woodshop News
___Woodsmith
___Woodwork
___Woodworker
___Woodworker's Journal
___Workbench

___Other_____

3. Which of the following woodworking/remodeling shows do you watch?

___Backyard America
___Home Time
___The American Woodworker
___The New Yankee Workshop
___This Old House
___Woodwright's Shop

___Other_____

4. What is your annual household income?

___$20,000-$29,999
___$30,000-$39,999
___$40,000-$49,999
___$50,000-$59,999
___$60,000-$69,999
___$70,000-$79,999
___$80,000-$89,999
___$90,000 +

5. What is your age group?

___20-29
___30-39
___40-49
___50-59
___60-69
___70 +

6. How long have you been a woodworker?

___0 - 2 Years
___2 - 8 Years
___8 - 20 Years
___20+ Years

7. How would you rank your woodworking skills?

___Simple
___Intermediate
___Advanced
___Master Craftsman

8. What stationary woodworking tools do you own? Check all that apply.

___Air Compressor
___Band Saw
___Drill Press
___Drum Sander
___Dust Collector
___Horizontal Boring Machine
___Jointer
___Lathe
___Mortiser
___Panel Saw
___Planer
___Power Feeder
___Radial Arm Saw
___Planer
___Spindle Sander
___Table Saw
___Vacuum Veneer Press
___Wide Belt Sander

___Other_____

9. How many of your woodworking machines are Grizzly? _____

10. Which benchtop tools do you own? Check all that apply.

___1" x 42" Belt Sander
___5" - 8" Drill Press
___8" Table Saw
___8" - 10" Bandsaw
___Disc/Belt Sander
___Mini Jointer
___6" - 8" Grinder
___Mini Lathe
___10" - 12" Thickness Planer
___Scroll Saw
___Spindle/Belt Sander

___Other_____

11. How many of the machines checked above are Grizzly? _____

12. Which portable/hand held power tools do you own? Check all that apply.

___Belt Sander
___Biscuit Joiner
___Circular Saw
___Detail Sander
___Drill/Driver
___Miter Saw
___Orbital Sander
___Palm Sander
___Portable Planer
___Saber Saw
___Reciprocating Saw
___Router

___Other_____

13. What machines/supplies would you like Grizzly Industrial to carry?

___12" Table Saw
___12" Jointer
___Combination Planer/Jointer
___Paint & Finishing Supplies
___Contractor's Supplies
___Radial Arm Saw
___Panel Saw
___Brass Hardware
___Lumber

___Other_____

14. What new accessories would you like Grizzly Industrial to carry?

___Builders Hardware
___Fasteners
___Hand Tools
___Wood Components

___Other_____

15. What other companies do you purchase your tools and supplies from?

_____

_____

16. Do you think your purchase represents good value?

___Yes ___No

17. Would you recommend Grizzly Industrial to a friend?

___Yes ___No

18. Would you allow us to use your name as a reference for Grizzly customers in your area? **Note: We never use names more than three times.**

___Yes ___No

19. Comments:_____

_____

_____

_____

_____

CUT ALONG DOTTED LINE

FOLD ALONG DOTTED LINE

Place
Stamp
Here

GRIZZLY INDUSTRIAL, INC.
P.O. BOX 2069
BELLINGHAM, WA 98227-2069

FOLD ALONG DOTTED LINE

Send a Grizzly Catalog to a friend:

Name_____

Street_____

City_____State_____Zip_____

TAPE ALONG EDGES--PLEASE DO NOT STAPLE

grizzly.com

TOOL WEBSITE

Buy Direct and Save with Grizzly® – Trusted, Proven and a Great Value!

Visit Our Website Today And Discover Why Grizzly® Is The Industry Leader!

- **SECURE ORDERING**
- **ORDERS SHIPPED WITHIN 24 HOURS**
- **E-MAIL RESPONSE WITHIN ONE HOUR**

-OR-

Call Today For A FREE Full Color Catalog

1-800-523-4777

VISA MasterCard DISCOVER NOVUS AMERICAN EXPRESS ®