MODEL T26612 STAND

MACHINE/STAND MOUNTING INSTRUCTIONS

For questions or help with this product contact Tech Support at (570) 546-9663 or techsupport@grizzly.com

Introduction

Figure 1. Model T26612 stand.

The Model T26612 stand is designed specifically for the G0758 mill/drill or machines with bases that have 8¼" wide x 6¼" deep mounting hole layouts and fit inside of the tray. The stand is 31½" tall with a 20½" wide by 18⅞" deep tray that provides a stable surface for a machine.

Anchoring Stand to Floor

Number of Mounting Holes 4
Diameter of Mounting Hardware..... ½"
(Hardware not included)

Anchoring the stand to the floor prevents machines from tipping or shifting and reduces vibration that may occur during operation, resulting in a machine that runs slightly quieter and feels more solid.

Local codes may require anchoring the stand to the floor if the machine will be installed in a commercial or workplace setting, or if it is permanently connected (hardwired) to the power supply.

If not required by any local codes, fastening the stand to the floor is an optional step. If you choose not to fasten the stand to floor, we recommend placing it on machine mounts, as these provide an easy method for leveling and they have vibration-absorbing pads.

Lag shield anchors with lag screws (see below) are a popular way to anchor machinery to a concrete floor, because the anchors sit flush with the floor surface, making it easy to unbolt and move the machine later. However, anytime local codes apply, you MUST follow the anchoring methodology specified by the code.

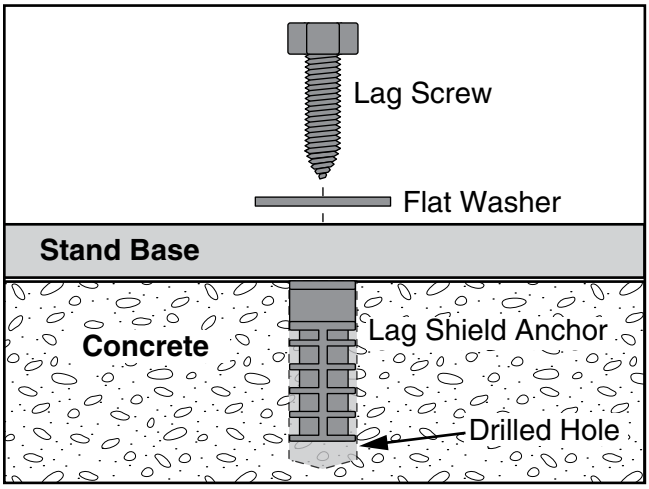

Figure 2. Popular method for anchoring machinery to a concrete floor.

#DM16511 PRINTED IN CHINA

Mounting Machine to Stand

The Model T26612 stand comes with four mounting holes with M10-1.5 hex nuts welded on below the mounting surface. Refer to **Figure 3** for mounting hole positions.

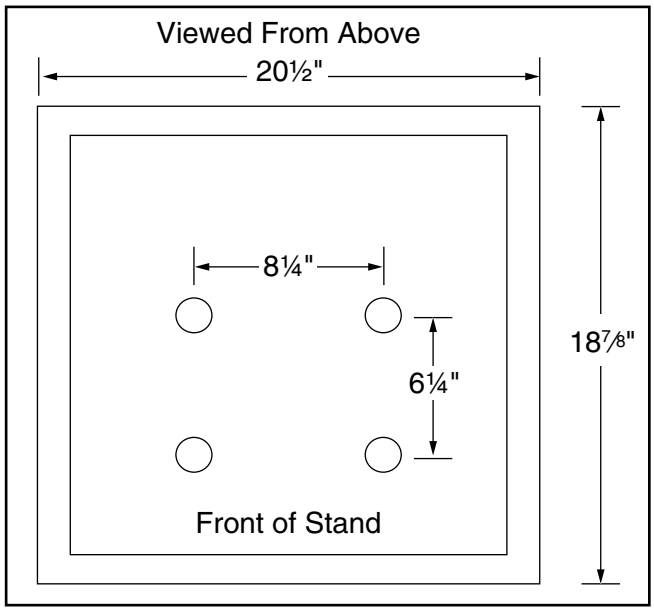

Figure 3. Layout of machine mounting holes.

Use (4) M10-1.5 hex bolts, (4) 10mm lock washers, and (4) 10mm flat washers to secure machine to stand as illlustrated in **Figure** below. Each hex bolt must extend at least a half inch below the welded on hex nut.

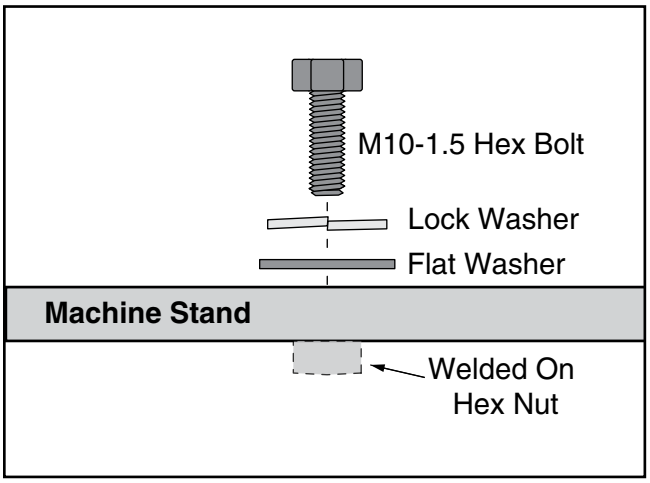

Figure 4. Mounting hardware configuration.