MODEL T30297
48" MAGNETIC
PAN & BOX BRAKE

OWNER'S MANUAL

(For models manufactured since 12/18)

#CS20185 PRINTED IN CHINA V1.07.20

⚠ WARNING!

This manual provides critical safety instructions on the proper setup, operation, maintenance, and service of this machine/tool. Save this document, refer to it often, and use it to instruct other operators.

Failure to read, understand and follow the instructions in this manual may result in fire or serious personal injury—including amputation, electrocution, or death.

The owner of this machine/tool is solely responsible for its safe use. This responsibility includes but is not limited to proper installation in a safe environment, personnel training and usage authorization, proper inspection and maintenance, manual availability and comprehension, application of safety devices, cutting/sanding/grinding tool integrity, and the usage of personal protective equipment.

The manufacturer will not be held liable for injury or property damage from negligence, improper training, machine modifications or misuse.

⚠ WARNING!

Some dust created by power sanding, sawing, grinding, drilling, and other construction activities contains chemicals known to the State of California to cause cancer, birth defects or other reproductive harm. Some examples of these chemicals are:

- **Lead from lead-based paints.**
- **Crystalline silica from bricks, cement and other masonry products.**
- **Arsenic and chromium from chemically-treated lumber.**

Your risk from these exposures varies, depending on how often you do this type of work. To reduce your exposure to these chemicals: Work in a well ventilated area, and work with approved safety equipment, such as those dust masks that are specially designed to filter out microscopic particles.

Table of Contents

INTRODUCTION

Contact Info

We stand behind our machines! If you have questions or need help, contact us with the information below. Before contacting, make sure you get the **serial number** and **manufacture date** from the machine ID label. This will help us help you faster.

Grizzly Technical Support
1815 W. Battlefield
Springfield, MO 65807
Phone: (570) 546-9663
Email: techsupport@grizzly.com

We want your feedback on this manual. What did you like about it? Where could it be improved? Please take a few minutes to give us feedback.

Grizzly Documentation Manager
P.O. Box 2069
Bellingham, WA 98227-2069
Email: manuals@grizzly.com

Manual Accuracy

We are proud to provide a high-quality owner's manual with your new machine!

We made every effort to be exact with the instructions, specifications, drawings, and photographs in this manual. Sometimes we make mistakes, but our policy of continuous improvement also means that **sometimes the machine you receive is slightly different than shown in the manual**.

If you find this to be the case, and the difference between the manual and machine leaves you confused or unsure about something, check our website for an updated version. We post current manuals and manual updates for free on our website at **www.grizzly.com**.

Alternatively, you can call our Technical Support for help. Before calling, make sure you write down the **Manufacture Date** and **Serial Number** from the machine ID label (see below). This information is required for us to provide proper tech support, and it helps us determine if updated documentation is available for your machine.

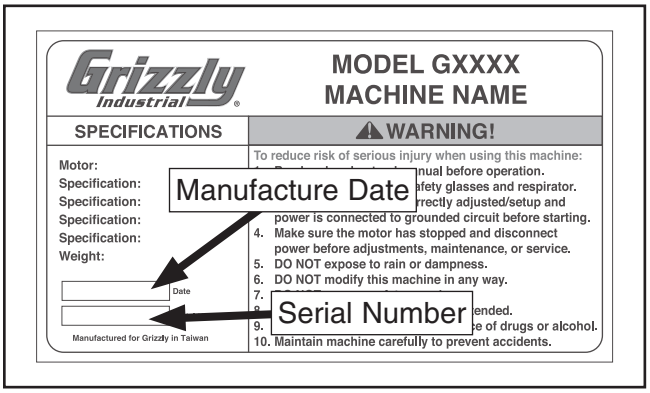

Identification

Become familiar with the names and locations of the controls and features shown below to better understand the instructions in this manual.

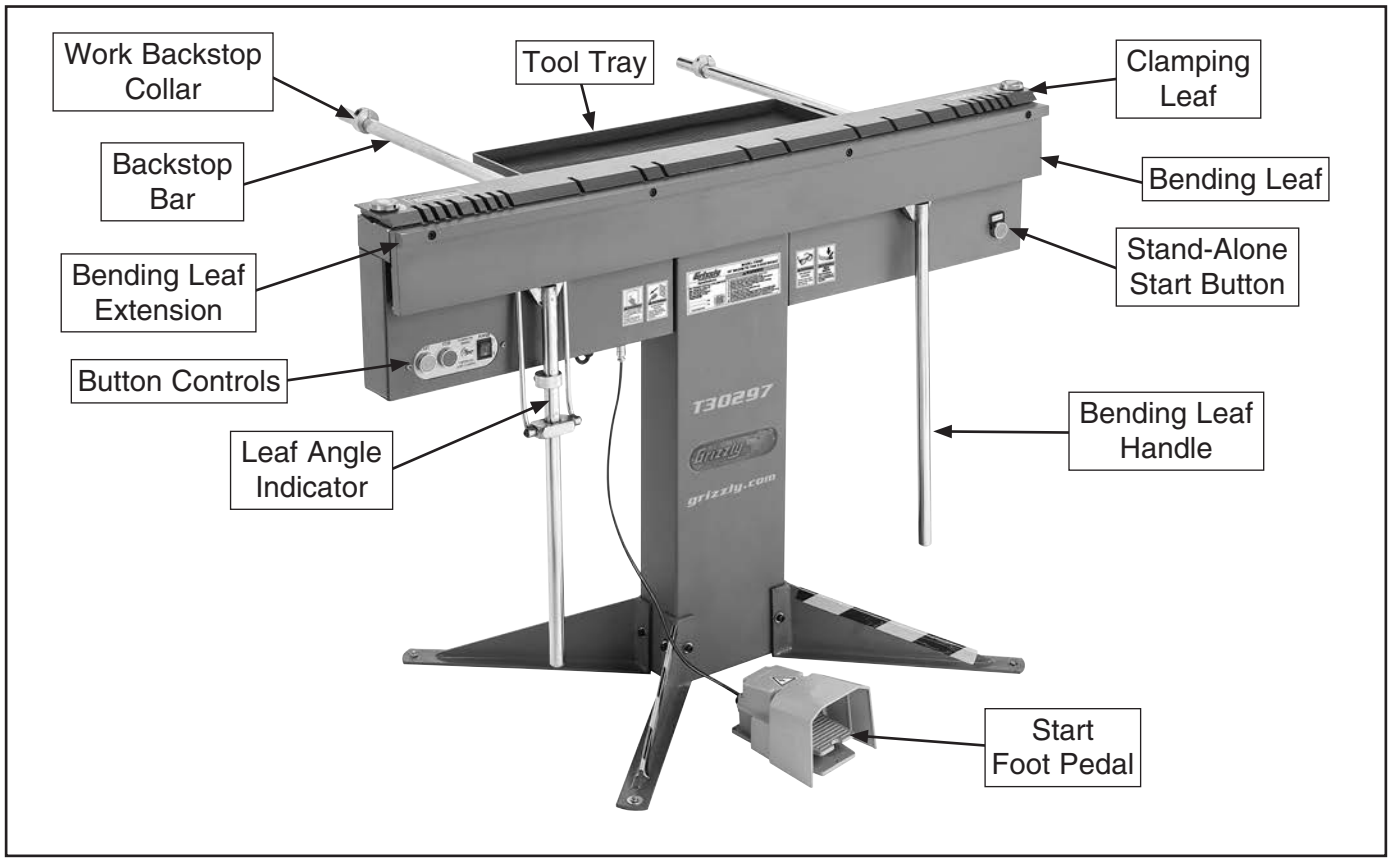

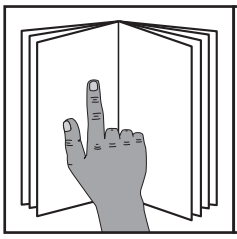

⚠WARNING

To reduce your risk of serious injury, read this entire manual BEFORE using machine.

Controls & Components

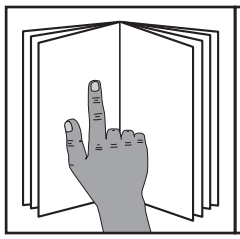

⚠WARNING

To reduce your risk of serious injury, read this entire manual BEFORE using machine.

Refer to the following figures and descriptions to become familiar with the basic controls and components of this machine. Understanding these items and how they work will help you understand the rest of the manual and minimize your risk of injury when operating this machine.

Electric Controls

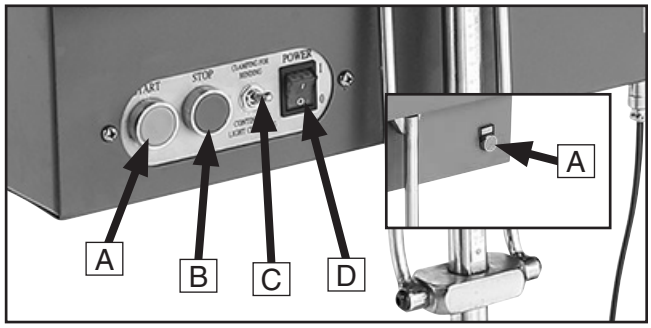

Figure 1. Main control panel and start button.

A. START Buttons: Activate pre-clamp magnet when power is ***ON*** (I). Pre-clamp magnet keeps clamping leaf/fingers in place until bending leaf is lifted and full electromagnetic force is engaged.

B. STOP Button: Deactivates magnet to release clamp bar when pressed and held for 2-3 seconds.

C. Clamp Switch: Toggles between thin and thick workpiece settings. Up position is for thick-gauged material (i.e. thicker than 20-gauge) while down position is for thin-gauged material (i.e. 20-gauge or thinner).

D. Power Switch: Machine is connected to power when in ON (I) position. Machine is disconnected from power in OFF (O) position.

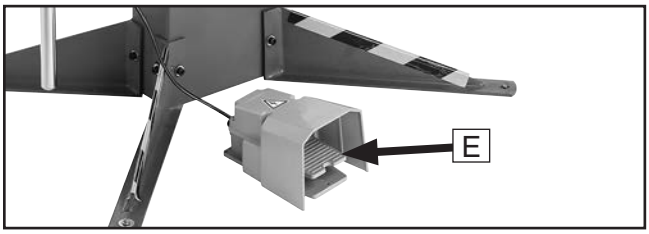

Figure 2. Start foot pedal location.

E. Start Foot Pedal: Activates pre-clamp magnet when power is ***ON*** (I). Pre-clamp magnet keeps clamping leaf/fingers in place until bending leaf is lifted and full electromagnetic force is engaged.

Manual Controls

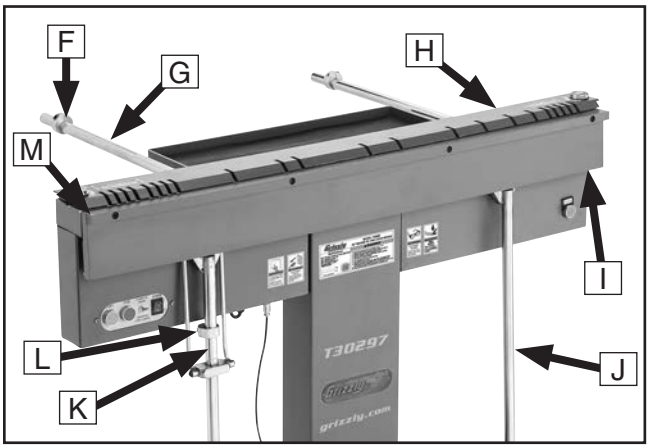

Figure 3. Bending leaf components.

F. Backstop Collar (1 of 2): Stops and holds workpiece length for repetitive bends at the same angle.

G. Backstop Bar (1 of 2): Supports workpiece.

H. Clamping Leaf: Secures workpiece to machine by magnetism.

I. Bending Leaf: Bends workpiece.

J. Bending Leaf Handle (1 of 2): Lifts bending leaf to produce bend.

K. Leaf Angle Indicator: Displays angle setting.

L. Bending Stop: Adjusts to stop operation at specific angle setting.

M. Bending Leaf Extension: Provides added support and pressure for thin-gauged bending operations.

MACHINE DATA SHEET

Customer Service #: (570) 546-9663 · To Order Call: (800) 523-4777 · Fax #: (800) 438-5901

MODEL T30297
48" MAGNETIC PAN & BOX BRAKE

Product Dimensions:

Weight	386 lbs.
Width (side-to-side) x Depth (front-to-back) x Height	51 x 39-1/2 x 37-1/2 in.
Footprint (Length/Width)	33-1/2 x 29-1/2 in.

Shipping Dimensions:

Type	Wood Crate
Weight	485 lbs.
Length x Width x Height	55 x 43 x 47 in.
Must Ship Upright	Yes

Electrical:

Power Requirement	110V, Single-Phase, 60 Hz
Full-Load Current Rating	4.3A
Minimum Circuit Size	15A
Connection Type	Cord & Plug
Power Cord Included	Yes
Power Cord Length	6 ft.
Power Cord Gauge	16 AWG
Plug Included	Yes
Included Plug Type	5-15
Switch Type	Control Panel w/ON/OFF Rocker Switch and Foot Pedal

Main Specifications:

Operation Information

Brake Range	0 - 180 deg.
Maximum Width	48 in.
Maximum Pan Depth	Unlimited
Maximum Height of Pan/Box Brake Sides	Unlimited
Minimum Reverse Bend	1 in.
Number of Fingers	7
Width of Fingers	1, 1.5, 2, 2.75, 5.5, 11, 23 in.

Capacities

Aluminum	14 Gauge
Mild Steel	16 Gauge
Stainless Steel	18 Gauge

Construction

Fingers	Precision-Ground Steel w/Hardened Edges
Base	Steel
Bending Leaf	Steel
Clamping Leaf	Steel
Paint Type/Finish	Enamel

Other Specifications:

Country of Origin	China
Warranty	1 Year
Approximate Assembly & Setup Time	30 Minutes
Serial Number Location	Machine ID Label

Features:

Foot Pedal-Activated Electromagnetic Clamping
Unlimited Pan Depth
6-Ton Clamping Force
Setback Adjustment Dials
Bending Stop

SECTION 1: SAFETY

For Your Own Safety, Read Instruction Manual Before Operating This Machine

The purpose of safety symbols is to attract your attention to possible hazardous conditions. This manual uses a series of symbols and signal words intended to convey the level of importance of the safety messages. The progression of symbols is described below. Remember that safety messages by themselves do not eliminate danger and are not a substitute for proper accident prevention measures. Always use common sense and good judgment.

DANGER	**Indicates an imminently hazardous situation which, if not avoided, WILL result in death or serious injury.**
WARNING	**Indicates a potentially hazardous situation which, if not avoided, COULD result in death or serious injury.**
CAUTION	**Indicates a potentially hazardous situation which, if not avoided, MAY result in minor or moderate injury. It may also be used to alert against unsafe practices.**
NOTICE	**Alerts the user to useful information about proper operation of the machine to avoid machine damage.**

Safety Instructions for Machinery

WARNING

OWNER'S MANUAL. Read and understand this owner's manual BEFORE using machine.

TRAINED OPERATORS ONLY. Untrained operators have a higher risk of being hurt or killed. Only allow trained/supervised people to use this machine. When machine is not being used, disconnect power, remove switch keys, or lock-out machine to prevent unauthorized use—especially around children. Make your workshop kid proof!

DANGEROUS ENVIRONMENTS. Do not use machinery in areas that are wet, cluttered, or have poor lighting. Operating machinery in these areas greatly increases the risk of accidents and injury.

MENTAL ALERTNESS REQUIRED. Full mental alertness is required for safe operation of machinery. Never operate under the influence of drugs or alcohol, when tired, or when distracted.

ELECTRICAL EQUIPMENT INJURY RISKS. You can be shocked, burned, or killed by touching live electrical components or improperly grounded machinery. To reduce this risk, only allow qualified service personnel to do electrical installation or repair work, and always disconnect power before accessing or exposing electrical equipment.

DISCONNECT POWER FIRST. Always disconnect machine from power supply BEFORE making adjustments, changing tooling, or servicing machine. This prevents an injury risk from unintended startup or contact with live electrical components.

EYE PROTECTION. Always wear ANSI-approved safety glasses or a face shield when operating or observing machinery to reduce the risk of eye injury or blindness from flying particles. Everyday eyeglasses are NOT approved safety glasses.

⚠WARNING

WEARING PROPER APPAREL. Do not wear clothing, apparel or jewelry that can become entangled in moving parts. Always tie back or cover long hair. Wear non-slip footwear to reduce risk of slipping and losing control or accidentally contacting cutting tool or moving parts.

HAZARDOUS DUST. Dust created by machinery operations may cause cancer, birth defects, or long-term respiratory damage. Be aware of dust hazards associated with each workpiece material. Always wear a NIOSH-approved respirator to reduce your risk.

HEARING PROTECTION. Always wear hearing protection when operating or observing loud machinery. Extended exposure to this noise without hearing protection can cause permanent hearing loss.

REMOVE ADJUSTING TOOLS. Tools left on machinery can become dangerous projectiles upon startup. Never leave chuck keys, wrenches, or any other tools on machine. Always verify removal before starting!

USE CORRECT TOOL FOR THE JOB. Only use this tool for its intended purpose—do not force it or an attachment to do a job for which it was not designed. Never make unapproved modifications—modifying tool or using it differently than intended may result in malfunction or mechanical failure that can lead to personal injury or death!

AWKWARD POSITIONS. Keep proper footing and balance at all times when operating machine. Do not overreach! Avoid awkward hand positions that make workpiece control difficult or increase the risk of accidental injury.

CHILDREN & BYSTANDERS. Keep children and bystanders at a safe distance from the work area. Stop using machine if they become a distraction.

GUARDS & COVERS. Guards and covers reduce accidental contact with moving parts or flying debris. Make sure they are properly installed, undamaged, and working correctly BEFORE operating machine.

FORCING MACHINERY. Do not force machine. It will do the job safer and better at the rate for which it was designed.

NEVER STAND ON MACHINE. Serious injury may occur if machine is tipped or if the cutting tool is unintentionally contacted.

STABLE MACHINE. Unexpected movement during operation greatly increases risk of injury or loss of control. Before starting, verify machine is stable and mobile base (if used) is locked.

USE RECOMMENDED ACCESSORIES. Consult this owner's manual or the manufacturer for recommended accessories. Using improper accessories will increase the risk of serious injury.

UNATTENDED OPERATION. To reduce the risk of accidental injury, turn machine ***OFF*** and ensure all moving parts completely stop before walking away. Never leave machine running while unattended.

MAINTAIN WITH CARE. Follow all maintenance instructions and lubrication schedules to keep machine in good working condition. A machine that is improperly maintained could malfunction, leading to serious personal injury or death.

DAMAGED PARTS. Regularly inspect machine for damaged, loose, or mis-adjusted parts—or any condition that could affect safe operation. Immediately repair/replace BEFORE operating machine. For your own safety, DO NOT operate machine with damaged parts!

MAINTAIN POWER CORDS. When disconnecting cord-connected machines from power, grab and pull the plug—NOT the cord. Pulling the cord may damage the wires inside. Do not handle cord/plug with wet hands. Avoid cord damage by keeping it away from heated surfaces, high traffic areas, harsh chemicals, and wet/damp locations.

EXPERIENCING DIFFICULTIES. If at any time you experience difficulties performing the intended operation, stop using the machine! Contact our Technical Support at (570) 546-9663.

Additional Safety for Magnetic Pan & Box Brakes

⚠WARNING

Fingers/hands can be severely pinched or crushed if caught between clamping and bending components during operation. Pacemakers or other electronically sensitive medical implants may be affected by magnetic fields. Severe cuts can occur to hands/fingers when contacting sharp workpiece edges. To minimize risk of injury, anyone operating this machine MUST completely heed the hazards and warnings below.

PINCHING INJURIES. The brake can quickly pinch or crush fingers, hands, or body parts. Never place fingers, hands, or body parts between or near the clamping and bending blocks during operation.

METAL EDGES. Sharp edges on sheet metal can cause severe cuts. Always wear leather gloves and chamfer/de-burr sharp sheet metal edges before bending the workpiece with this machine.

LEAVING UNATTENDED. To reduce the risk of pinching/crushing injuries with children or visitors, disconnect power when not in use.

SECURING BRAKE. Before using, secure the brake to the floor so it can support the weight and dynamic forces involved in bending sheet metal. Otherwise, the brake may unexpectedly move or tip during operation, causing serious injury or property damage.

MINIMUM CLAMPING AREA. Workpiece must extend at least 2" under clamping leaf or fingers to bend securely. If workpiece does not extend 2" under clamping leaf or fingers, use a different method or machine to bend workpiece.

HEATING METAL. Heating the workpiece with a torch or welding it while clamped in the brake may weaken the fingers, blocks, and frame of this machine. Do not use a torch, welder, or other similar heating tool near the brake.

TOOLS IN POOR CONDITION. Using this tool with loose hardware or damaged components could result in sudden, unexpected movements during use, which could result in severe injury. Inspect the brake for cracked components, levers, or loose fasteners. Correct any problems before use.

CAPACITY. Exceeding the capacity of the brake may result in sudden breakage that causes unexpected movement, ejects dangerous metal debris at the operator or bystanders, or causes machine damage. Only use sheet metal that is within the rated capacity of this brake (refer to the **Machine Data Sheet**).

MAGNETIC FIELDS. Stay at least 12" back from machine if outfitted with a pacemaker or otherwise electrically sensitive medical implant. Magnetic fields produced by electromagnet may have an effect on these objects.

⚠WARNING

Like all machinery there is potential danger when operating this machine. Accidents are frequently caused by lack of familiarity or failure to pay attention. Use this machine with respect and caution to decrease the risk of operator injury. If normal safety precautions are overlooked or ignored, serious personal injury may occur.

⚠CAUTION

No list of safety guidelines can be complete. Every shop environment is different. Always consider safety first, as it applies to your individual working conditions. Use this and other machinery with caution and respect. Failure to do so could result in serious personal injury, damage to equipment, or poor work results.

SECTION 2: POWER SUPPLY

Availability

Before installing the machine, consider the availability and proximity of the required power supply circuit. If an existing circuit does not meet the requirements for this machine, a new circuit must be installed. To minimize the risk of electrocution, fire, or equipment damage, installation work and electrical wiring must be done by an electrician or qualified service personnel in accordance with all applicable codes and standards.

⚠WARNING

Electrocution, fire, shock, or equipment damage may occur if machine is not properly grounded and connected to power supply.

Full-Load Current Rating

The full-load current rating is the amperage a machine draws at 100% of the rated output power. On machines with multiple motors, this is the amperage drawn by the largest motor or sum of all motors and electrical devices that might operate at one time during normal operations.

Full-Load Current Rating at 110V..... 4.3 Amps

The full-load current is not the maximum amount of amps that the machine will draw. If the machine is overloaded, it will draw additional amps beyond the full-load rating.

If the machine is overloaded for a sufficient length of time, damage, overheating, or fire may result—especially if connected to an undersized circuit. To reduce the risk of these hazards, avoid overloading the machine during operation and make sure it is connected to a power supply circuit that meets the specified circuit requirements.

⚠WARNING

Serious injury could occur if you connect machine to power before completing setup process. DO NOT connect to power until instructed later in this manual.

110V Circuit Requirements

This machine is prewired to operate on a power supply circuit that has a verified ground and meets the following requirements:

Nominal Voltage 110V, 115V, 120V
Cycle .....60 Hz
Phase ..... Single-Phase
Power Supply Circuit ..... 15 Amps

A power supply circuit includes all electrical equipment between the breaker box or fuse panel in the building and the machine. The power supply circuit used for this machine must be sized to safely handle the full-load current drawn from the machine for an extended period of time. (If this machine is connected to a circuit protected by fuses, use a time delay fuse marked D.)

⚠CAUTION

For your own safety and protection of property, consult an electrician if you are unsure about wiring practices or electrical codes in your area.

Note: *Circuit requirements in this manual apply to a dedicated circuit—where only one machine will be running on the circuit at a time. If machine will be connected to a shared circuit where multiple machines may be running at the same time, consult an electrician or qualified service personnel to ensure circuit is properly sized for safe operation.*

Grounding & Plug Requirements

This machine MUST be grounded. In the event of certain malfunctions or breakdowns, grounding reduces the risk of electric shock by providing a path of least resistance for electric current.

This machine is equipped with a power cord that has an equipment-grounding wire and a grounding plug. Only insert plug into a matching receptacle (outlet) that is properly installed and grounded in accordance with all local codes and ordinances. DO NOT modify the provided plug!

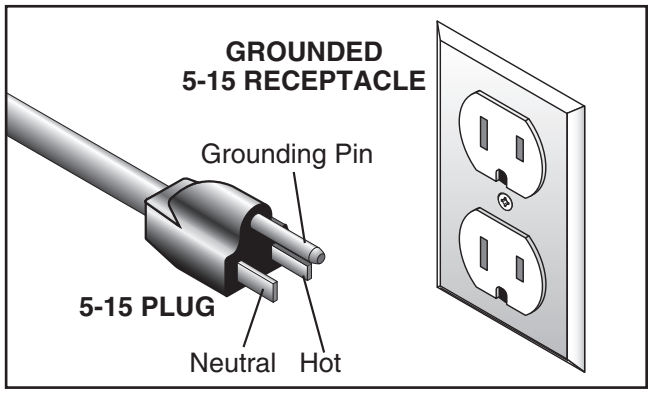

Figure 4. Typical 5-15 plug and receptacle.

⚠CAUTION

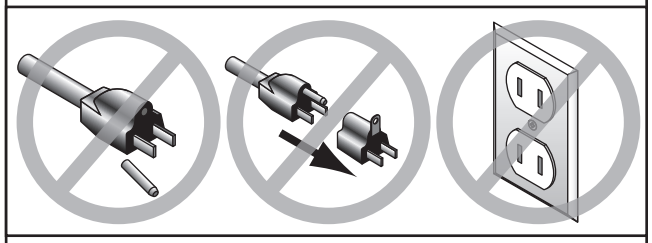

SHOCK HAZARD!

Two-prong outlets do not meet the grounding requirements for this machine. Do not modify or use an adapter on the plug provided—if it will not fit the outlet, have a qualified electrician install the proper outlet with a verified ground.

Improper connection of the equipment-grounding wire can result in a risk of electric shock. The wire with green insulation (with or without yellow stripes) is the equipment-grounding wire. If repair or replacement of the power cord or plug is necessary, do not connect the equipment-grounding wire to a live (current carrying) terminal.

Check with a qualified electrician or service personnel if you do not understand these grounding requirements, or if you are in doubt about whether the tool is properly grounded. If you ever notice that a cord or plug is damaged or worn, disconnect it from power, and immediately replace it with a new one.

Extension Cords

We do not recommend using an extension cord with this machine. If you must use an extension cord, only use it if absolutely necessary and only on a temporary basis.

Extension cords cause voltage drop, which can damage electrical components and shorten motor life. Voltage drop increases as the extension cord size gets longer and the gauge size gets smaller (higher gauge numbers indicate smaller sizes).

Any extension cord used with this machine must be in good condition and contain a ground wire and matching plug/receptacle. Additionally, it must meet the following size requirements:

Minimum Gauge Size .....14 AWG
Maximum Length (Shorter is Better).....50 ft.

SECTION 3: SETUP

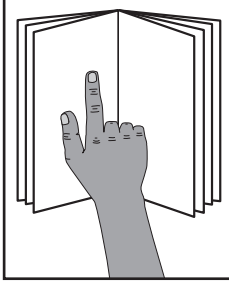

⚠WARNING

This machine presents serious injury hazards to untrained users. Read through this entire manual to become familiar with the controls and operations before starting the machine!

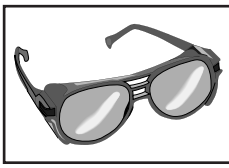

⚠WARNING

Wear safety glasses during the entire setup process!

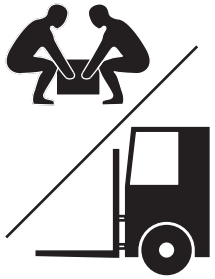

⚠WARNING

HEAVY LIFT!

Straining or crushing injury may occur from improperly lifting machine or some of its parts. To reduce this risk, get help from other people and use a forklift (or other lifting equipment) rated for weight of this machine.

Needed for Setup

The following items are needed, but not included, for the setup/assembly of this machine.

Description	Qty
• Another Person	1
• Safety Glasses (for each person)	1
• Hammer	1
• Lifting Straps (Rated for at least 750 lbs.)	2
• Lifting Equipment (Rated for at least 750 lbs.)	1
• Mounting Hardware	As Needed
• Level 12"	1
• Shims	As Needed
• Hex Wrench 6mm	1

Unpacking

This machine was carefully packaged for safe transport. When unpacking, separate all enclosed items from packaging materials and inspect them for shipping damage. ***If items are damaged, please call us immediately at (570) 546-9663.***

IMPORTANT: Save all packaging materials until you are completely satisfied with the machine and have resolved any issues between Grizzly or the shipping agent. *You MUST have the original packaging to file a freight claim. It is also extremely helpful if you need to return your machine later.*

Inventory

The following is a list of items shipped with your machine. Before beginning setup, lay these items out and inventory them.

If any non-proprietary parts are missing (e.g. a nut or a washer), we will gladly replace them; or for the sake of expediency, replacements can be obtained at your local hardware store.

NOTICE

If you cannot find an item on this list, carefully check around/inside the machine and packaging materials. Often, these items get lost in packaging materials while unpacking or they are pre-installed at the factory.

Box 1 (Figures 5–6)		**Qty**
A.	Machine	1
B.	Wide Clamping Leaf	1
C.	Narrow Clamping Leaf	1
D.	Clamping Finger Set (1, 1.5, 2, 2.75, 5.5, 11, and 23 in.)	1
E.	Slotted Clamping Leaf	1
F.	Tool Tray	1
G.	Backstop Bars	2
H.	Backstop Collars	2

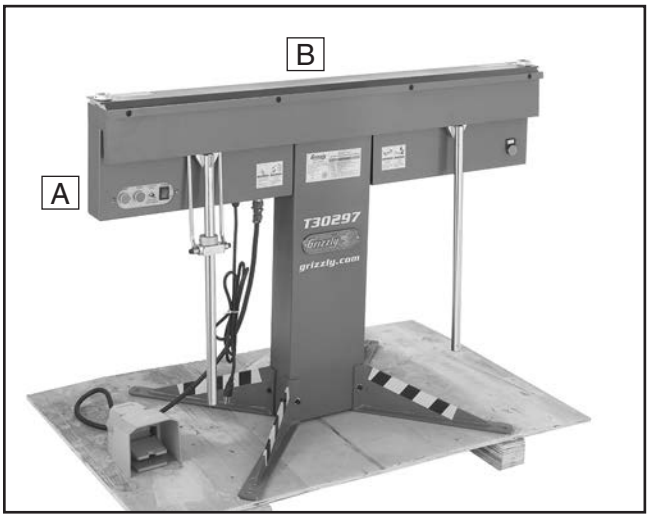

Figure 5. Machine as shipped.

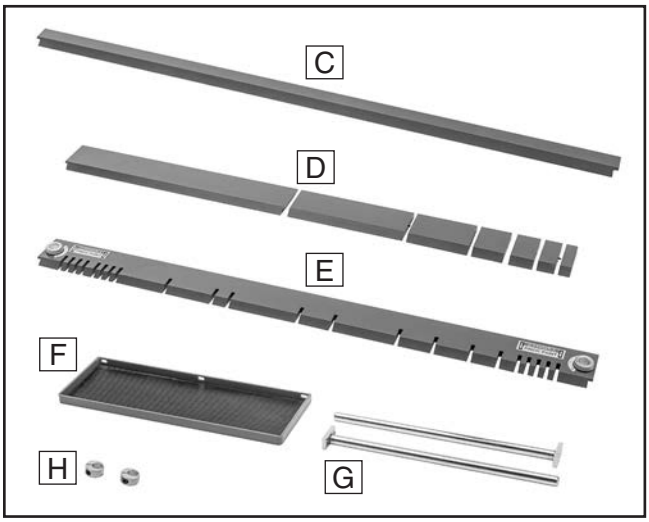

Figure 6. Loose inventory.

Site Considerations

Weight Load

Refer to the **Machine Data Sheet** for the weight of your machine. Make sure that the surface upon which the machine is placed will bear the weight of the machine, additional equipment that may be installed on the machine, and the heaviest workpiece that will be used. Additionally, consider the weight of the operator and any dynamic loading that may occur when operating the machine.

Space Allocation

Consider the largest size of workpiece that will be processed through this machine and provide enough space around the machine for adequate operator material handling or the installation of auxiliary equipment. With permanent installations, leave enough space around the machine to open or remove doors/covers as required by the maintenance and service described in this manual. **See below for required space allocation.**

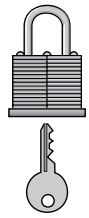

⚠CAUTION

Children or untrained people may be seriously injured by this machine. Only install in an access restricted location.

Physical Environment

The physical environment where the machine is operated is important for safe operation and longevity of machine components. For best results, operate this machine in a dry environment that is free from excessive moisture, hazardous chemicals, airborne abrasives, or extreme conditions. Extreme conditions for this type of machinery are generally those where the ambient temperature range exceeds 41°–104°F; the relative humidity range exceeds 20%–95% (non-condensing); or the environment is subject to vibration, shocks, or bumps.

Electrical Installation

Place this machine near an existing power source. Make sure all power cords are protected from traffic, material handling, moisture, chemicals, or other hazards. Make sure to leave enough space around machine to disconnect power supply or apply a lockout/tagout device, if required.

Lighting

Lighting around the machine must be adequate enough that operations can be performed safely. Shadows, glare, or strobe effects that may distract or impede the operator must be eliminated.

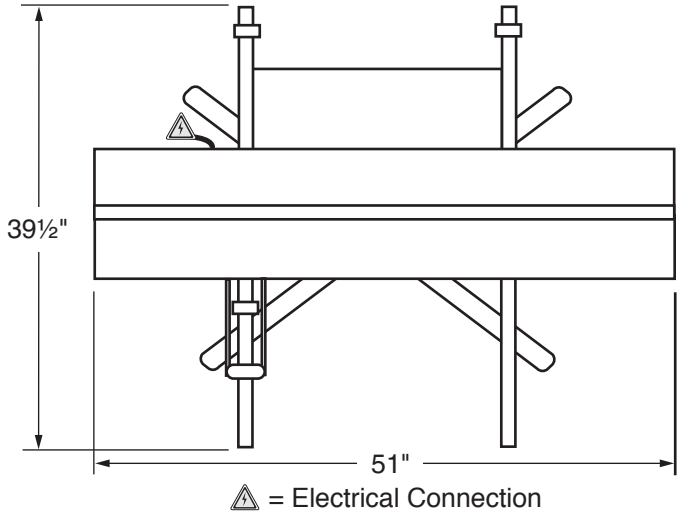

Figure 7. Minimum working clearances.

Lifting & Placing

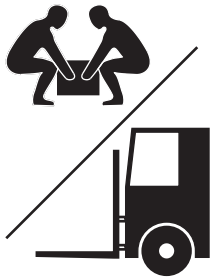

⚠WARNING

HEAVY LIFT!

Straining or crushing injury may occur from improperly lifting machine or some of its parts. To reduce this risk, get help from other people and use a forklift (or other lifting equipment) rated for weight of this machine.

Do not attempt to lift or move this machine without using the proper lifting equipment (such as forklift or crane). Each piece of lifting equipment must be rated for at least 750 lbs. to support dynamic loads that may be applied while lifting. Refer to **Needed for Setup** on **Page 12** for complete list of needed equipment for setup and installation.

To lift and place machine:

1. Remove shipping crate top and sides, then remove small components from shipping pallet.

2. Remove clamping leaf that ships on machine (see **Figure 8**).

3. Loosen and unplug foot pedal cord from socket underneath control panel (see **Figure 8**) and remove foot pedal from pallet.

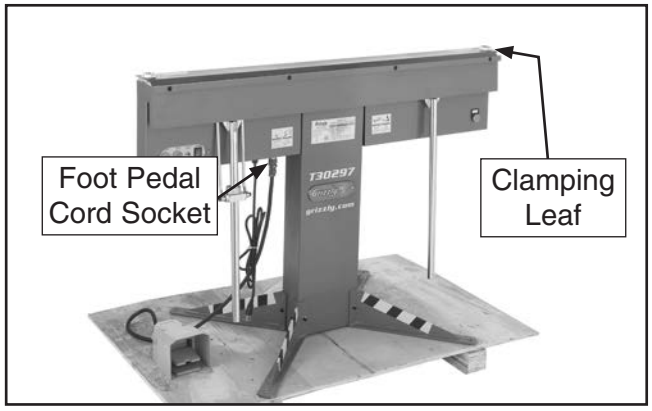

Figure 8. Location of clamping leaf and foot pedal cord socket.

4. Move machine to its prepared location while it is still attached to shipping pallet.

5. Remove (4) lag bolts and flat washers that secure machine to pallet (see **Figure 9**).

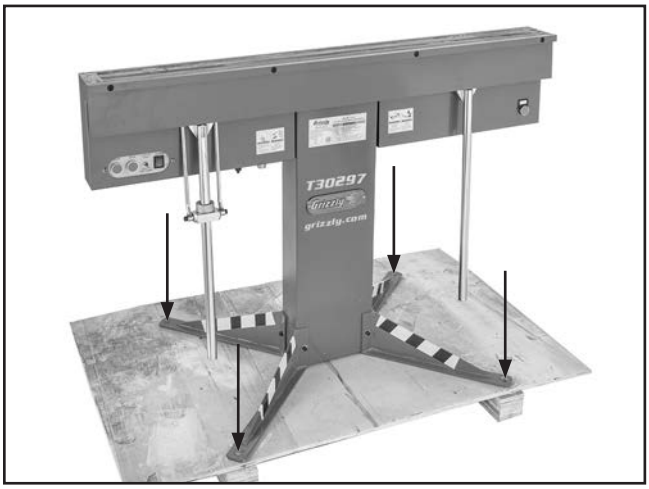

Figure 9. Location of lag bolts.

6. Wrap web slings underneath machine at locations shown in **Figure 10** and attach them to lifting device.

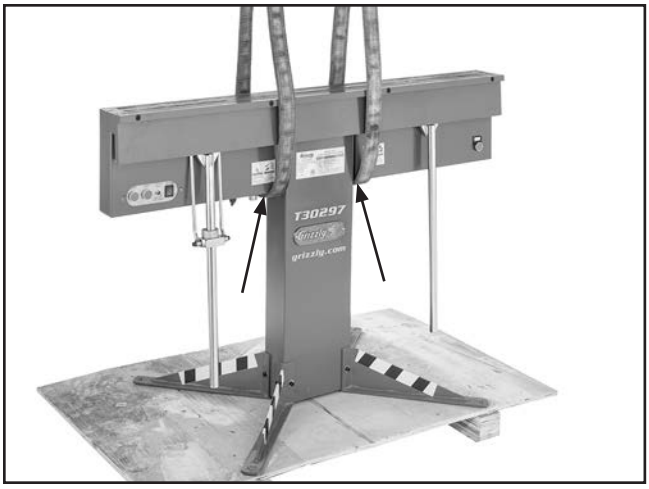

Figure 10. Locations for lifting.

7. Have an assistant help stabilize machine from swinging or rocking when lifted, and raise machine just enough to clear shipping pallet, then remove pallet.

8. Lower machine onto floor and refer to **Leveling** and **Anchoring to Floor** on **Page 16** to secure machine.

Leveling

Leveling the brake helps the leafs and other cast-iron components remain straight and flat during the lifespan of the machine. Components on an unlevel machine may slowly twist due to the dynamic loads placed on the machine during operation, which will negatively affect the ability of the brake to produce accurate bends.

IMPORTANT: Use only hand tools to secure machine to floor. Do not tighten with impact tools, which can permanently twist and bend components and pull a level machine out of alignment.

If needed, use metal shims between the base and the floor when leveling the machine.

Anchoring to Floor

Number of Mounting Holes 4
Diameter of Mounting Hardware..... 7/16"

⚠WARNING

A machine not properly anchored to floor may tip during operation, causing crushing injuries or property damage. Anchor this machine to the floor using holes shown in Figure 11 to prevent tipping or shifting that may occur during operation.

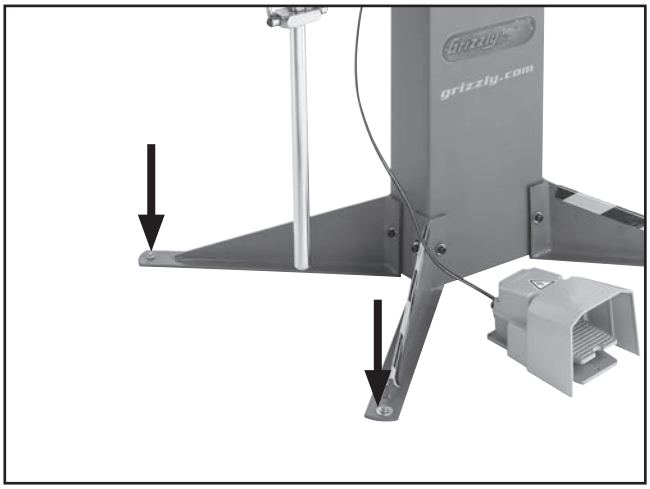

Figure 11. Location of mounting holes (2 of 4).

Anchoring to Concrete Floors

Lag shield anchors with lag screws (see below) are a popular way to anchor machinery to a concrete floor, because the anchors sit flush with the floor surface, making it easy to unbolt and move the machine later, if needed. However, anytime local codes apply, you MUST follow the anchoring methodology specified by the code.

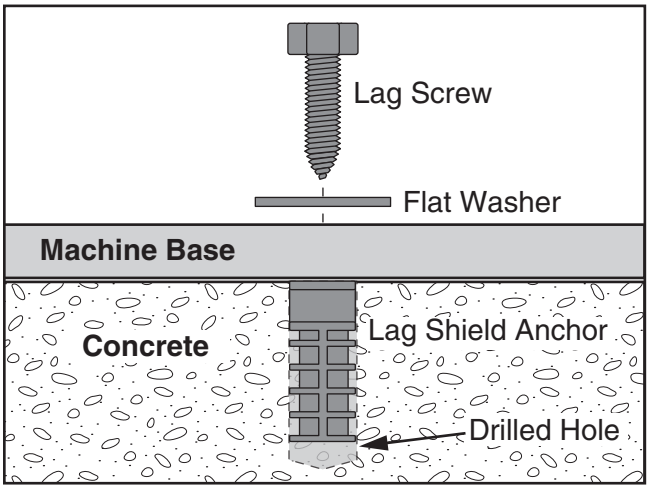

Figure 12. Popular method for anchoring machinery to a concrete floor.

Cleanup

The unpainted surfaces of your machine are coated with a heavy-duty rust preventative that prevents corrosion during shipment and storage. This rust preventative works extremely well, but it will take a little time to clean.

Be patient and do a thorough job cleaning your machine. The time you spend doing this now will give you a better appreciation for the proper care of your machine's unpainted surfaces.

There are many ways to remove this rust preventative, but the following steps work well in a wide variety of situations. Always follow the manufacturer's instructions with any cleaning product you use and make sure you work in a well-ventilated area to minimize exposure to toxic fumes.

Before cleaning, gather the following:
- Disposable rags
- Cleaner/degreaser (WD•40 works well)
- Safety glasses & disposable gloves
- Plastic paint scraper (optional)

Basic steps for removing rust preventative:

1. Put on safety glasses.

2. Coat the rust preventative with a liberal amount of cleaner/degreaser, then let it soak for 5–10 minutes.

3. Wipe off the surfaces. If your cleaner/degreaser is effective, the rust preventative will wipe off easily. If you have a plastic paint scraper, scrape off as much as you can first, then wipe off the rest with the rag.

4. Repeat **Steps 2–3** as necessary until clean, then coat all unpainted surfaces with a quality metal protectant to prevent rust.

WARNING

Gasoline and petroleum products have low flash points and can explode or cause fire if used to clean machinery. Avoid using these products to clean machinery.

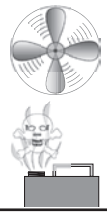

CAUTION

Many cleaning solvents are toxic if inhaled. Only work in a well-ventilated area.

NOTICE

Avoid harsh solvents like acetone or brake parts cleaner that may damage painted surfaces. Always test on a small, inconspicuous location first.

T23692—Orange Power Degreaser
A great product for removing the waxy shipping grease from the ***non-painted*** parts of the machine during clean up.

Figure 13. T23692 Orange Power Degreaser.

Assembly

The machine must be fully assembled before it can be operated. Before beginning the assembly process, refer to **Needed for Setup** and gather all listed items. To ensure the assembly process goes smoothly, first clean any parts that are covered or coated in heavy-duty rust preventative (if applicable).

The Model T30297 comes fully assembled except for the backstop bars, backstop collars, and tool tray. However, for the Test Run, you must also install one of the clamping leaves and a workpiece.

To assemble machine:

1. Align numbered terminals, then plug foot pedal cord into socket in bottom of control panel (see **Figure 14**).

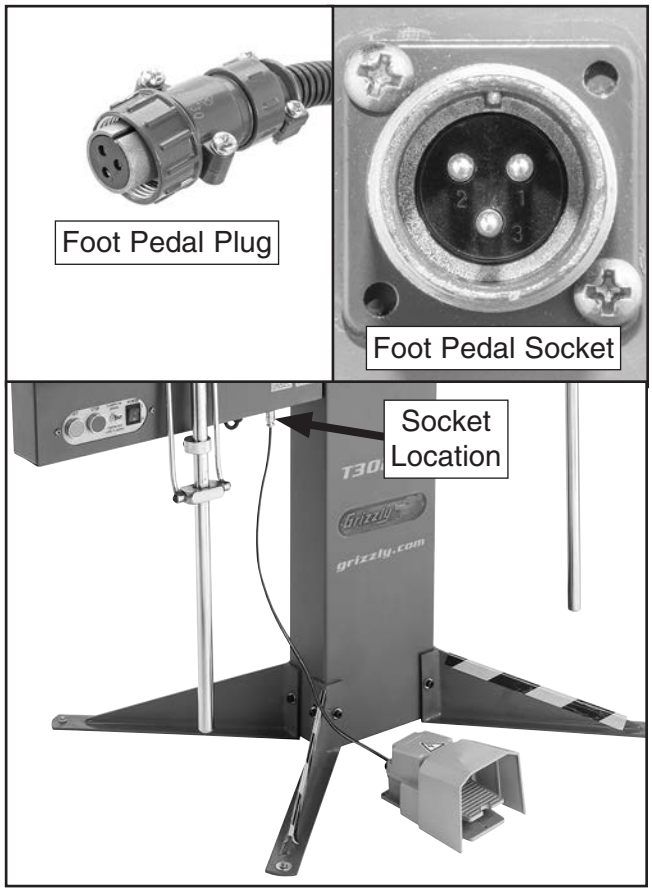

Figure 14. Foot pedal cord components.

2. Attach each backstop bar to back of brake using (2) pre-installed cap screws (see **Figure 15**).

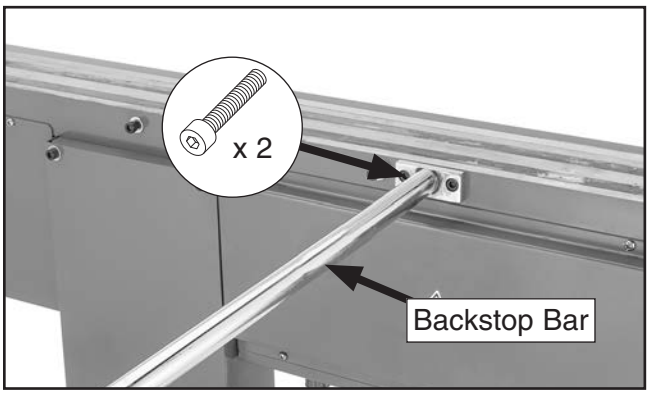

Figure 15. Backstop bar attached to brake.

3. Slide a backstop collar onto each backstop bar and secure pre-installed cap screw (see **Figure 16**).

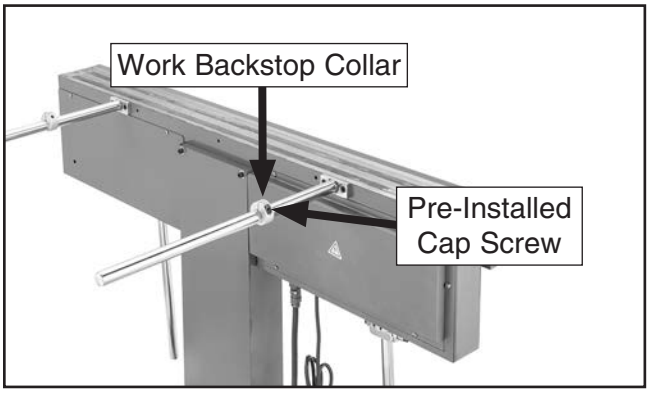

Figure 16. Collar installed on backstop bar.

4. Attach tool tray to back of brake between backstop bars using (3) pre-installed cap screws and flat washers (see **Figure 17**).

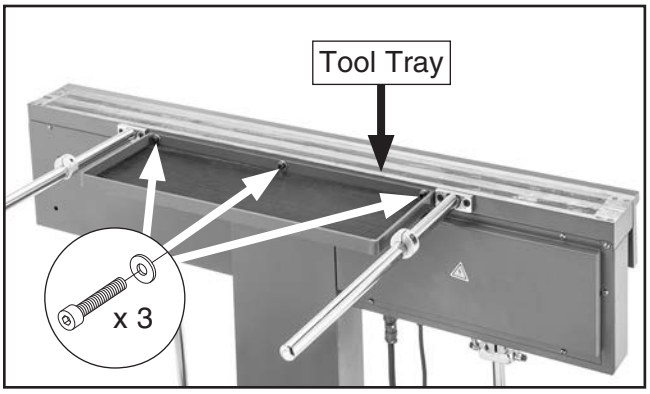

Figure 17. Tool tray attached to brake with cap screws.

Test Run

Once assembly is complete, test run the machine to ensure it is properly connected to power and safety components are functioning correctly.

If you find an unusual problem during the test run, immediately stop the machine, disconnect it from power, and fix the problem BEFORE operating the machine again. The **Troubleshooting** table in the **SERVICE** section of this manual can help.

The Test Run consists of verifying the following: 1) The magnet and magnet controls work correctly, 2) the de-magnetizing pulse works correctly, and 3) the magnet micro-switch operates correctly.

⚠WARNING

Serious injury or death can result from using this machine BEFORE understanding its controls and related safety information. DO NOT operate, or allow others to operate, machine until the information is understood.

⚠WARNING

DO NOT start machine until all preceding setup instructions have been performed. Operating an improperly set up machine may result in malfunction or unexpected results that can lead to serious injury, death, or machine/property damage.

⚠WARNING

Stay at least 12 inches back from machine if outfitted with a pacemaker or otherwise electronically sensitive medical implant. Magnetic fields produced by electromagnet may have an effect on these objects.

Items Needed	**Qty**
Scrap Sheet Metal (20-Gauge)	1

To test run machine:

1. Place workpiece on top of machine as shown in **Figure 18**.

Figure 18. Workpiece placed on machine.

2. Clear all setup tools away from machine.

3. Place slotted clamping leaf on top of workpiece, aligning dial shafts at each end with divots on machine (see **Figure 19**).

4. Adjust each dial indicator to 0 (see **Figure 19**).

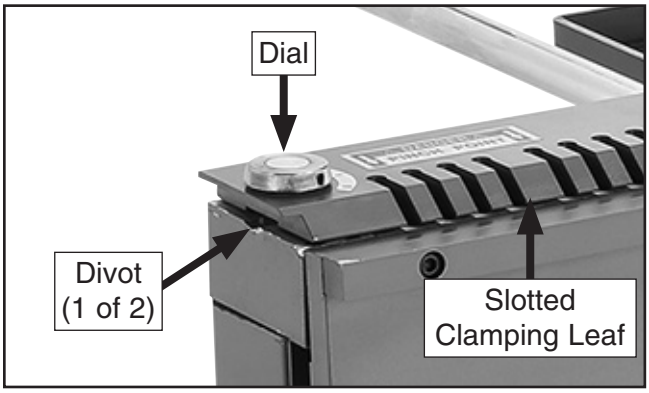

Figure 19. Clamping leaf dial shafts aligned with divots.

5. Toggle power switch to (O) position (see **Figure 20**).

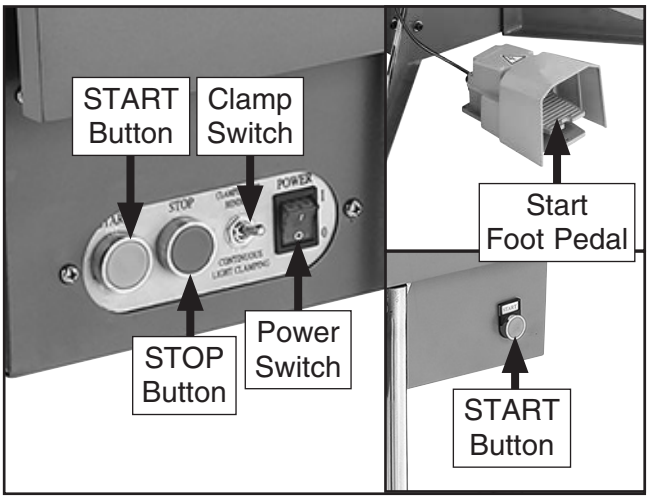

Figure 20. Electrical controls.

6. Toggle clamp switch to CONTINUOUS LIGHT CLAMPING.

7. Connect machine to power supply.

8. Toggle power switch to (I) position to turn power ***ON*** (see **Figure 20**).

9. Press green START (I) button on control panel to activate magnet (see **Figure 20**).

10. Try to move clamping leaf to verify magnet is adhering workpiece against machine. Clamping leaf should NOT move.

11. Press red STOP (O) button to deactivate magnet (see **Figure 20**).

12. Try to remove clamping leaf from machine.

    — If clamping leaf releases from machine, de-magnetizing pulse is working correctly. Proceed to **Step 13**.

    — If clamping leaf *does not* release from machine, de-magnetizing pulse or STOP button is not working correctly. Refer to **Troubleshooting** on **Page 35** before proceeding.

13. Press stand-alone green START (I) button on to activate magnet (see **Figure 20**).

14. Try to move clamping leaf to verify magnet is adhering workpiece against machine. Clamping leaf should NOT move.

15. Press red STOP (O) button.

16. Press start foot pedal to activate magnet (see **Figure 20**).

17. Try to move clamping leaf to verify magnet is adhering workpiece against machine. Clamping leaf should NOT move.

18. Use bending leaf handles to lift bending leaf and bend workpiece.

    — If workpiece *does not* release from machine during operation, magnet micro-switch is working correctly. Proceed to **Step 19**.

    — If workpiece *does* release from machine during operation, magnet micro-switch is not working correctly. Stop bending operation and toggle power to (O) position to turn power ***OFF***. Micro-switch must be adjusted or replaced before proceeding, refer to **Adjusting Magnet Micro-Switch** on **Page 36**.

19. Lower bending leaf.

20. Press red STOP (O) button.

21. Toggle power switch to (O) position to turn power ***OFF*** (see **Figure 20**).

SECTION 4: OPERATIONS

Operation Overview

The purpose of this overview is to provide the novice machine operator with a basic understanding of how the machine is used during operation, so the machine controls/components discussed later in this manual are easier to understand.

Due to the generic nature of this overview, it is **not** intended to be an instructional guide. To learn more about specific operations, read this entire manual, seek additional training from experienced machine operators, and do additional research outside of this manual by reading "how-to" books, trade magazines, or websites.

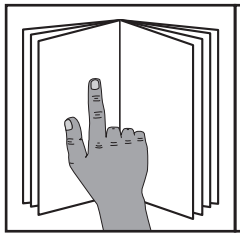

WARNING

To reduce your risk of serious injury, read this entire manual BEFORE using machine.

WARNING

Bodily injury could result from using this machine. Always wear safety glasses, leather work boots, and heavy duty leather work gloves when operating this machine or whenever handling sheet metal.

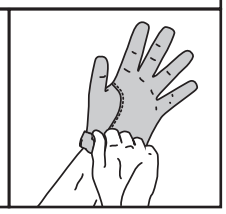

WARNING

Stay at least 12 inches back from machine if outfitted with a pacemaker or otherwise electronically sensitive medical implant. Magnetic fields produced by electromagnet may have an effect on these objects.

NOTICE

If you are not experienced with this type of machine, WE STRONGLY RECOMMEND that you seek additional training outside of this manual. Read books/magazines or get formal training before beginning any projects. Regardless of the content in this section, Grizzly Industrial will not be held liable for accidents caused by lack of training.

To complete a typical operation, the operator does the following:

1. Examines workpiece to make sure it is suitable for bending.
2. Selects clamping leaf or fingers for operation.
3. Removes or installs bending leaf extension, depending on operation.
4. Puts on safety glasses, leather boots, and leather gloves.
5. Aligns clamping fixture to workpiece bend.
6. Correctly adjusts setback and backstops.
7. Connects machine to power.
8. Turns machine ***ON*** and activates magnet to secure workpiece.
9. Checks leaf or finger alignment with bend.
10. Adjusts clamping power and bending stop.
11. Using proper body position and both hands, raises bending leaf and activates full magnet power to form correct bend angle.
12. Lowers bending leaf, then deactivates magnet to release workpiece.
13. Disconnects machine from power.
14. Removes workpiece from machine.

Bend Allowance

When a bend is made in sheet metal, the inside surface of the bend compresses and the outside surface stretches. To bend metal objects accurately, you need to consider the length of each bend, especially when more than one bend is required. This is called bend allowance.

The bend allowance is added to the sum of the outside dimensions of the workpiece flat surfaces to obtain the overall length and width of the blank needed to make a particular part.

Exact allowances can only be obtained by trial due to differences in sheet metal hardness, how the workpiece is positioned, and difficulties in making an exact bend radius. Formulas for calculating the bend allowance can be found in metalworking handbooks or the internet.

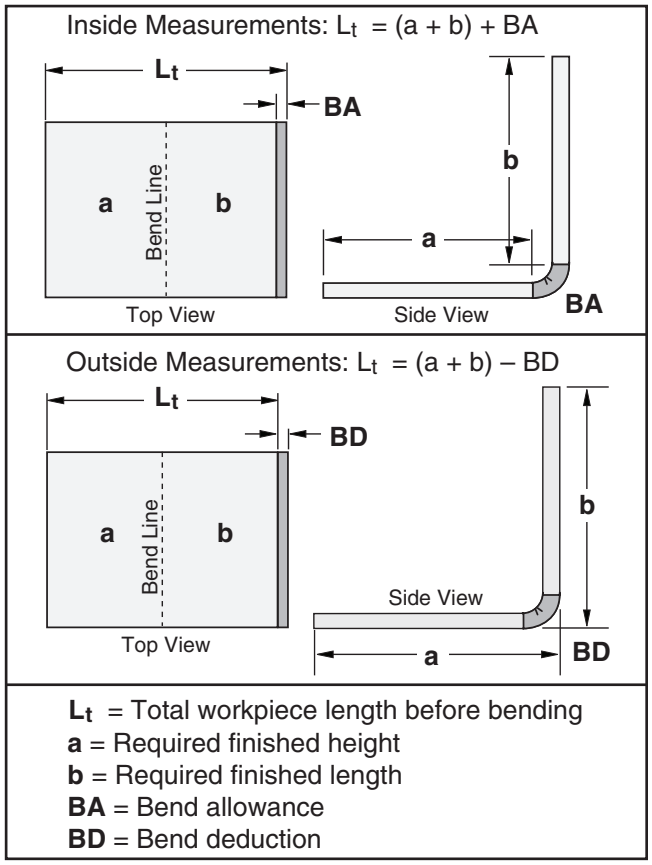

Figure 21. Bend allowance measurements.

Straight Bending

If all your operation requires is bending a straight line, you can use any of the clamping fixtures included with your machine.

The wide clamping leaf (see **Figure 22**) provides a larger surface for clamping. This leaf's width and setback dial make it ideal for thicker and larger workpieces.

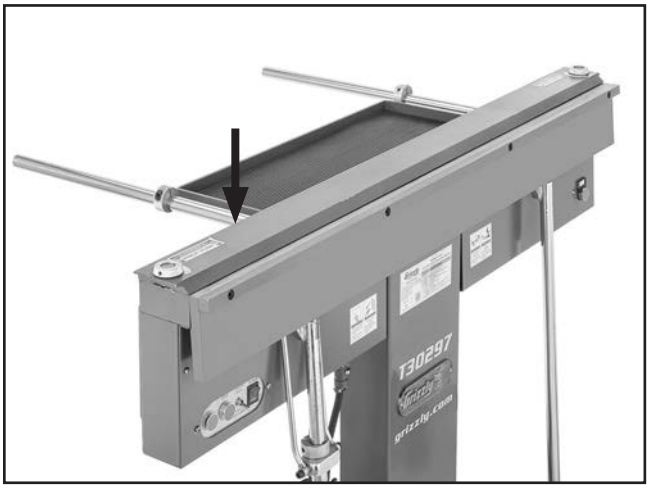

Figure 22. Wide clamping leaf installed.

The narrow clamping leaf (see **Figure 23**) is much thinner for projects that do not require as much holding power. Workpieces need to extend at least 2" under any clamping fixture you use, and at just over 2" wide, the narrow clamping leaf does not require the use of scrap metal to support its full width with small or shallow workpieces.

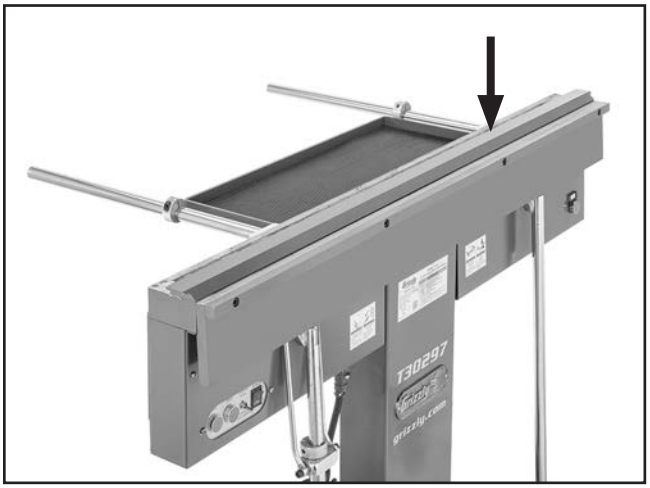

Figure 23. Narrow clamping leaf installed.

The slotted clamping leaf (see **Figure 24**) is the same width as the wide clamping leaf, but it is slotted to also provide clearances between bends. This leaf is one piece, as opposed to being comprised of separate fingers, which means it will not need to be aligned beyond lining it up with the intended bend. To allow for this easy installation, the slots are shallow, so this fixture is best for bending boxes that will have a depth less than 1½".

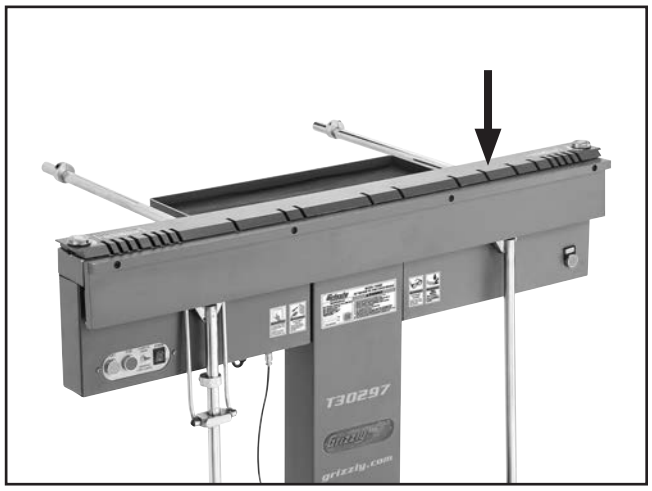

Figure 24. Slotted clamping leaf installed.

Multiple clamping fingers (see **Figure 25**), when used all together, can achieve the same results as the wide clamping leaf. When separated, the fingers can be arranged for any operation supported by the capabilities of the machine (see **Page 5**).

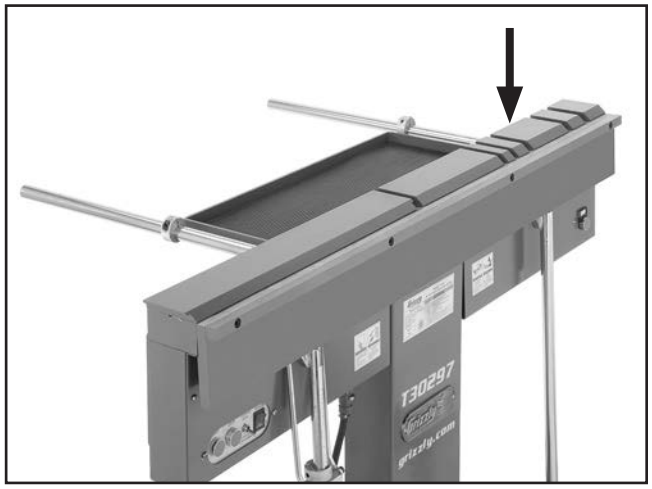

Figure 25. Individual clamping fingers installed.

Pan & Box Bending

When bending a piece of flat metal into a box, you should be able to make the first two bends with whichever clamping leaf you like (see **Figure 26**).

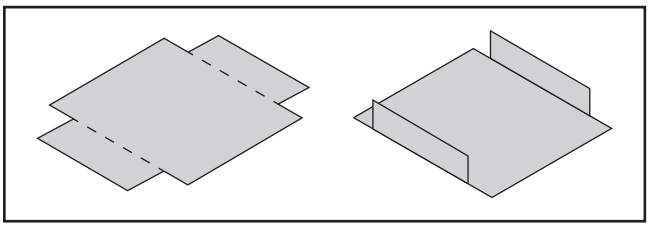

Figure 26. Example of straight bending.

However, for the remaining bends, there needs to be clearance for those first bends (see **Figure 27**).

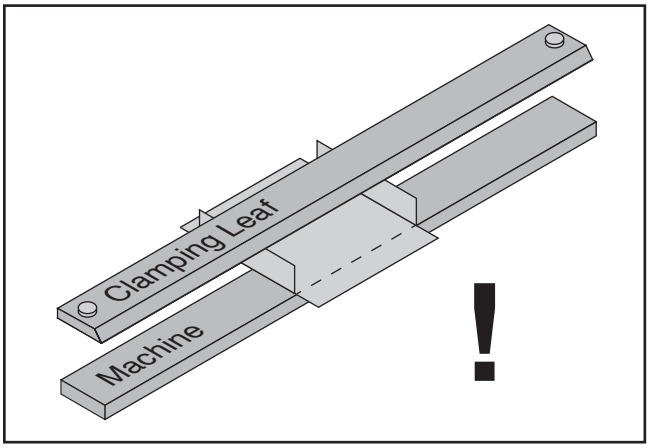

Figure 27. No clearance for first bends.

To provide the necessary clearance (see **Figure 28**), install either the slotted clamping leaf for shallow bending (see **Dial Leaf Clamping** on **Page 24**) or clamping fingers (see **Finger Clamping** on **Page 25**).

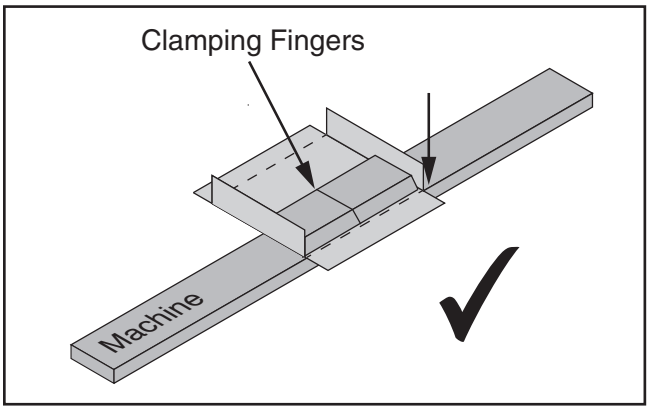

Figure 28. Clearance for first bends.

Dial Leaf Clamping

The wide clamping leaf and the slotted clamping leaf included with the Model T30297 are constructed with setback dials on either end. These dials keep the leaf in place on the machine due to two divots machined into the top (see **Figure 29**).

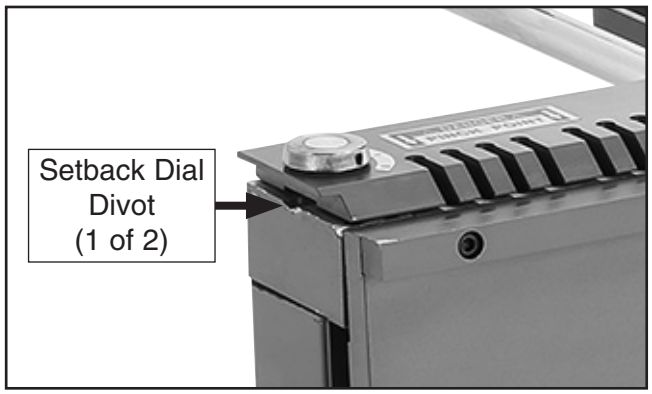

Figure 29. Setback dial divots.

The setback dials rest in these divots, and when the dials are turned, they adjust the setback forward or backward. However, if the dials are not aligned with the divots, this adjustment will not be accurate.

To clamp with dial leaf:

1. Mark workpiece with location of desired bend.

2. Secure workpiece on machine with clamping leaf, aligning front of leaf with line marked in **Step 1** and both setback dials with divots.

⚠CAUTION

A workpiece may be heavy or sharp and can injure operator or bystander if it is not secure and comes loose during bending operation. Workpiece must extend a minimum of 2" under clamping leaf for clamping leaf to secure it fully. If workpiece does not extend the full width of clamping leaf, use scrap material of same thickness as workpiece to allow clamping leaf to sit flat on machine (see Figure 30).

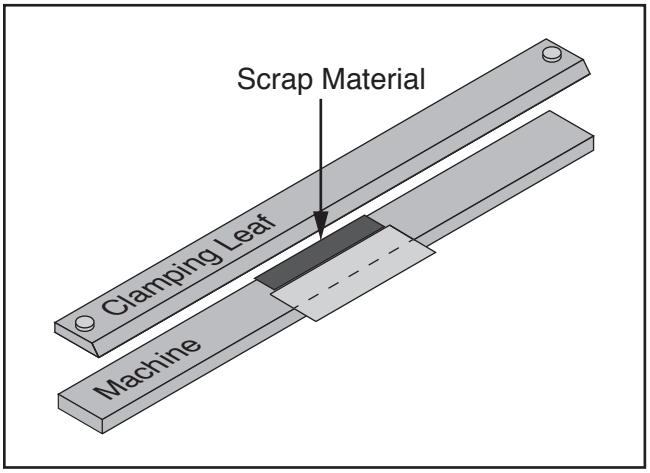

Figure 30. Scrap material used to level clamping leaf.

3. Adjust setback (refer to **Adjusting Setback** on **Page 26**).

4. Press START button or foot pedal to apply pre-clamping force.

5. Check alignment of leaf and workpiece to ensure bend will be straight along workpiece length before performing bending operation.

Narrow Leaf Clamping

Since the narrow clamping leaf is without setback dials, a bit more care needs to be taken when installing so the bend occurs where you would like it.

To clamp with narrow leaf:

1. Mark workpiece with location of desired bend.

2. Secure workpiece on machine with narrow clamping leaf, aligning front of leaf with line marked in **Step 1** (see **Figure 31**).

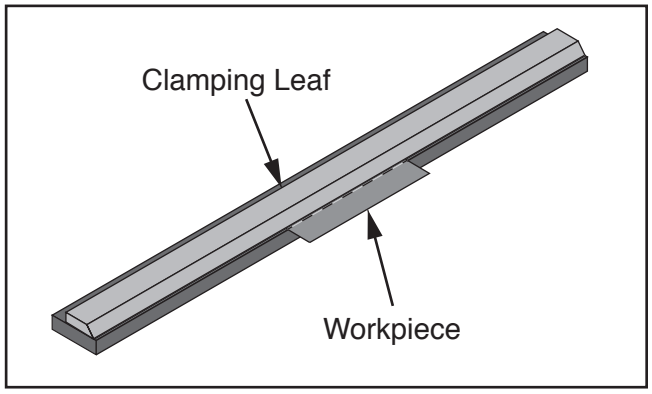

Figure 31. Narrow clamping leaf aligned with bend mark.

⚠CAUTION

A workpiece may be heavy or sharp and can injure operator or bystander if it is not secure and comes loose during bending operation. Workpiece must extend fully under narrow clamping leaf for clamping leaf to be secure. If workpiece does not extend the full width of clamping leaf, use a different method or machine to bend workpiece.

3. Adjust setback (refer to **Adjusting Setback** on **Page 26**).

4. Press START button or foot pedal to apply pre-clamping force.

5. Check alignment of leaf and workpiece to ensure bend will be straight along workpiece length before performing bending operation.

Finger Clamping

The clamping fingers are the most versatile of the clamping fixtures included with the Model T30297. The whole set can be used together to accomplish straight bends, or you can use them separately to create bends necessary for boxes and pans (see **Figure 32**).

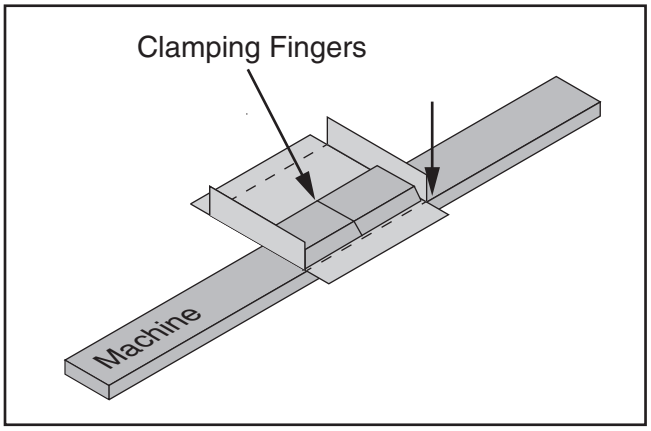

Figure 32. Clearance for box bends.

Tools Needed	**Qty**
Straightedge	1

To clamp with fingers:

1. Mark workpiece with location of desired bend and determine length of bend (see **Figure 33**).

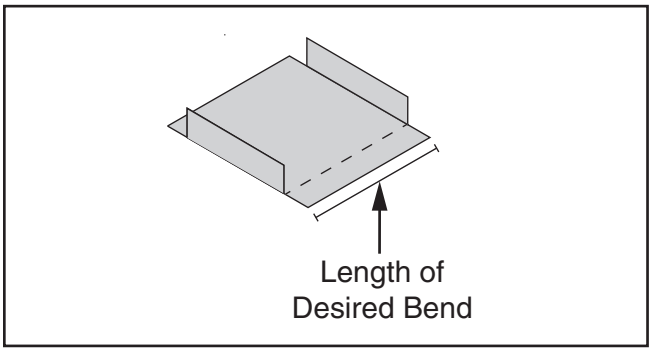

Figure 33. Measuring workpiece for bend.

2. Select finger or fingers that will provide the length necessary. Use included roll pins to secure them together when appropriate.

Note: *Fingers do not need to equal length of bend. They can be placed with a small distance between them (see* ***Figure*** **34***) as long as outside length equals workpiece bend.*

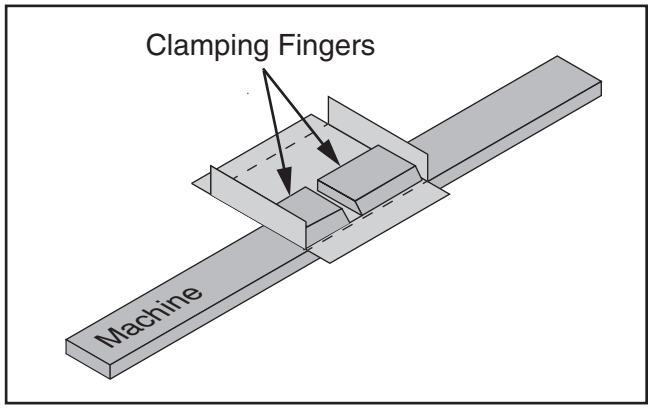

Figure 34. Proper clamping finger placement.

3. Secure workpiece on machine with clamping fingers, aligning front of fingers with line marked in **Step 1**.

⚠ CAUTION

A workpiece may be heavy or sharp and can injure operator or bystander if it is not secure and comes loose during bending operation. Workpiece must extend a minimum of 2" under clamping fingers for clamping fingers to secure it fully. If workpiece does not extend the full width of clamping fingers, use scrap material of same thickness as workpiece to allow clamping fingers to sit flat on machine (see Figure 35).

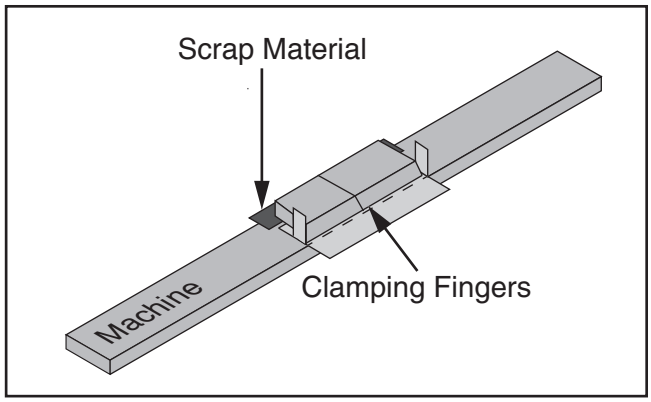

Figure 35. Scrap material used to level clamping fingers.

4. Adjust setback (refer to **Adjusting Setback** on **Page 26**).

5. Press START button or foot pedal to apply pre-clamping force.

6. Check alignment of fingers with a straightedge to ensure bend will be straight along workpiece length before performing bending operation.

Adjusting Setback

Setback is the required distance between the bending leaf and the clamping leaf or fingers to properly make the bend (see **Figure 36**). A number of factors determine the correct setback distance, such as bend allowance, bend radius, and material thickness.

There are many sources to help you calculate the correct setback for your operation, such as metalworking handbooks, the internet, or experienced sheet metal workers.

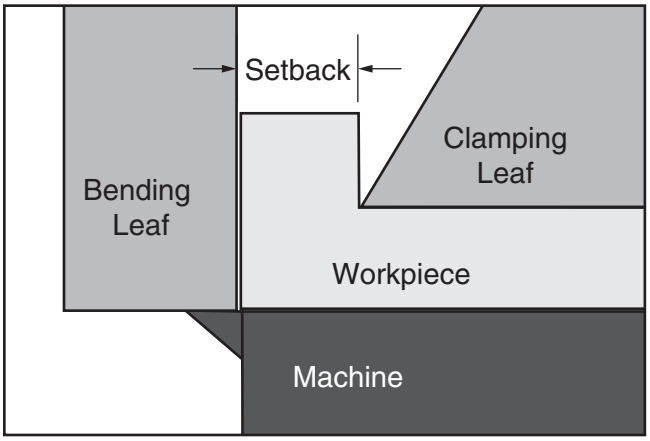

Figure 36. Identification of setback.

The narrow clamping leaf and clamping fingers require manual setback adjustment while the wide and slotted clamping leaf both have two setback dials for easy adjusting.

Adjusting Setback for Narrow Clamping Leaf or Clamping Fingers

Tools Needed **Qty**
Calipers 1

To adjust setback for narrow clamping leaf or clamping fingers:

1. Align front of clamping leaf or fingers to bend.

2. Use calipers to measure distance between both ends of clamping fixture and where workpiece will contact bending leaf (see **Figure 37**).

Figure 37. Measuring setback.

3. Adjust clamping fixture until desired setback is even along length.

Adjusting Setback for Wide or Slotted Clamping Leaf

Tools Needed **Qty**
Calipers 1

To adjust setback for wide or slotted clamping leaf:

1. Secure workpiece to machine using clamping leaf (refer to **Dial Leaf Clamping** on **Page 24**).

2. Turn setback dials the same amount to adjust leaf to desired setback (see **Figure 38**).

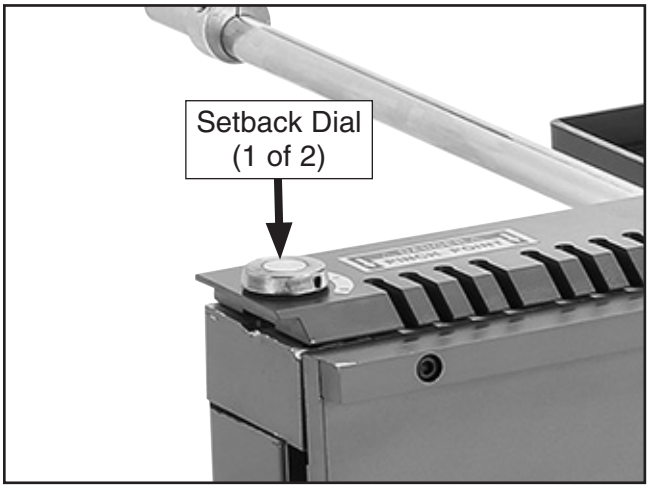

Figure 38. Location of setback dials.

3. Use calipers to confirm setback along workpiece length after magnetizing before performing bending operation.

Adjusting Backstop Collars

When workpieces extend past the back of the clamping leaf or fingers, the backstop bars provide support so the weight of the workpiece will not bend or otherwise cause it to warp. The adjustable collars on these bars function as work stops that you can adjust to the length of the workpiece as long as the workpiece does not extend past the end of the bars.

Each collar has a cap screw securing it to the backstop bar. Loosen the cap screw to adjust each collar position (see **Figure 39**). Tighten the cap screw when desired position has been achieved.

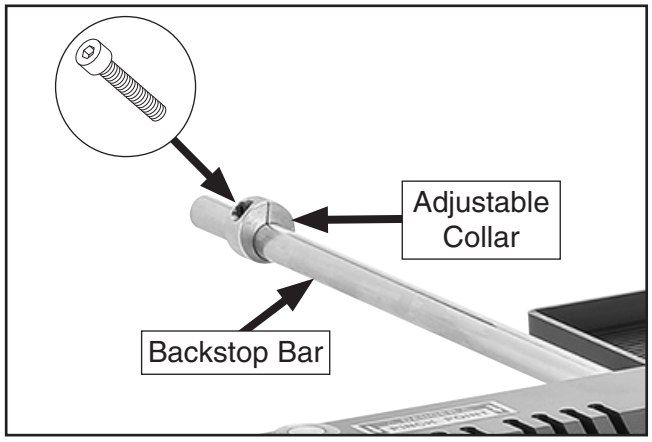

Figure 39. Backstop bar components.

Tool Needed	**Qty**
Hex Wrench 6mm	1

Adjusting Bending Stop

The adjustable collar on the bending angle indicator acts as a bending stop, allowing the operator to produce repetitive bends at the same angle.

Item Needed	**Qty**
Hex Wrench 6mm	1

To adjust bending stop:

1. Loosen clamping cap screw on bending stop collar (see **Figure 40**) so stop collar is loose on angle indicator shaft.

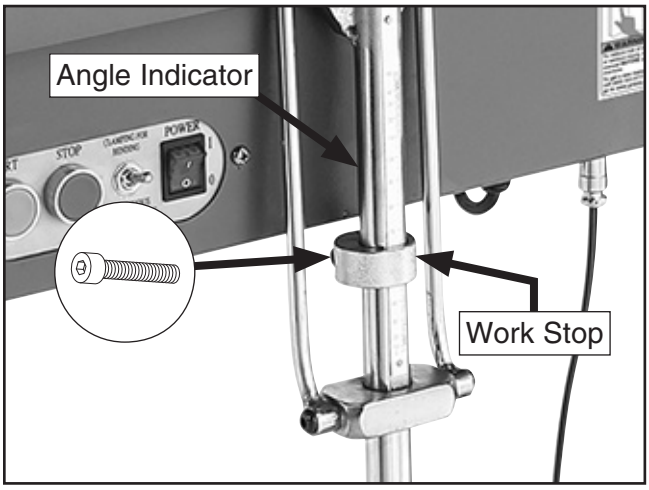

Figure 40. Bending stop controls.

2. Adjust collar to desired angle on angle indicator shaft.

3. Tighten clamping cap screw on bending stop collar to secure bending leaf angle setting.

Toggling Clamp Switch

The clamp switch controls two different settings: clamping for bending and continuous light clamping. All this really means is that there are two different magnetic settings for holding your workpiece and the securing clamping fixture to the machine.

For thinner material (20-gauge or thinner), toggle the switch to CONTINUOUS LIGHT CLAMPING (see **Figure 41**).

For thicker material (thicker than 20-gauge), when you'll need a bit more power to secure your workpiece for the entire operation, toggle the switch to CLAMPING FOR BENDING (see **Figure 41**).

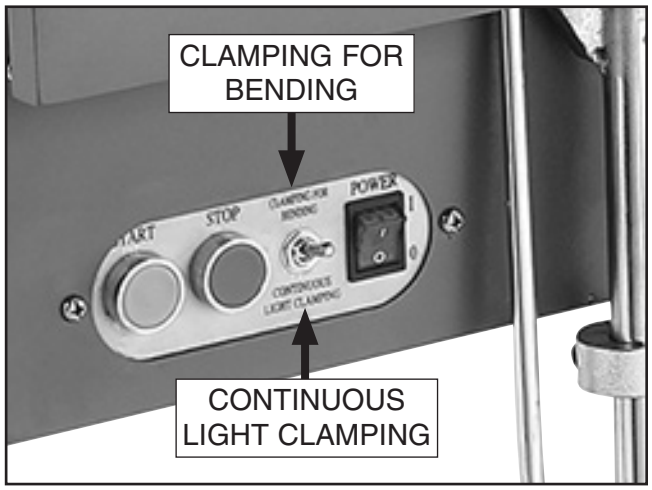

Figure 41. Clamp switch settings.

Installing/Removing Leaf Extension

The bending leaf extension ships installed on the Model T30297, but it is not appropriate for every operation possible.

Typically, for thicker workpieces (such as 16-gauge mild steel), the extension should be removed, but it offers extra bending support and pressure for thinner materials (such as 20-gauge or thinner). For most round stock, installing the extension is appropriate.

The bending leaf extension is attached to the bending leaf with four cap screws (see **Figure 42**). Use these to remove or install the leaf extension as needed. When installing, confirm the length of the leaf extension is aligned with the top of the bending leaf (see **Figure 42**). If the extension is not aligned, the operation will not produce an even bend.

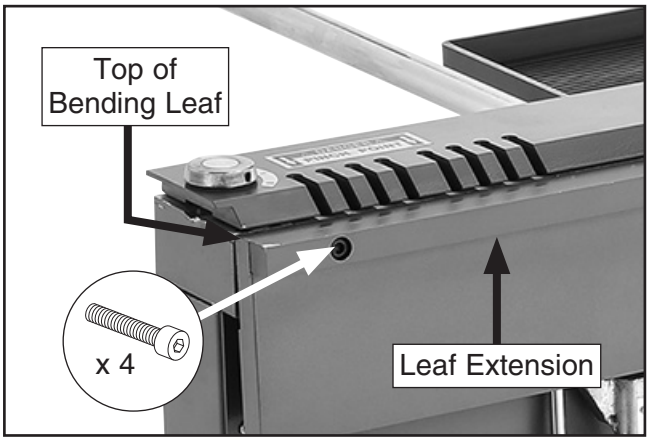

Figure 42. Bending leaf extension installed.

Tool Needed	**Qty**
Hex Wrench 6mm	1

SECTION 5: ACCESSORIES

⚠WARNING

Installing unapproved accessories may cause machine to malfunction, resulting in serious personal injury or machine damage. To reduce this risk, only install accessories recommended for this machine by Grizzly.

NOTICE

Refer to our website or latest catalog for additional recommended accessories.

T10091—Deburring and Beveling Machine
Deburr & bevel adges the easy way while getting consistent results every time. This stationary Deburring & Beveling Machine is powered by a ½ HP motor and includes a carbide cutter. Features include variable-speed to 4300 RPM & adjustable depth of cut.

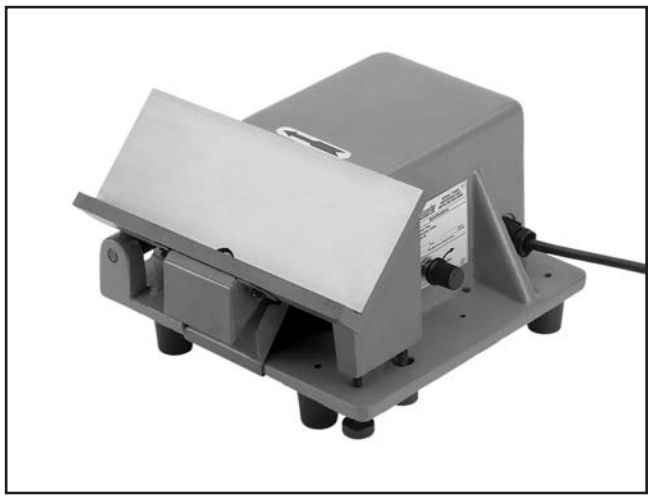

Figure 43. Model T10091 Deburring and Beveling Machine.

T25208—23-Pc. Deburring Set
Includes: 380-0060 double burr; 2-piece 380-0088 handle; 380-0097, 380-0098, and 380-0091 holders; D25 and D40 scrapers; C20 countersink; ES100 and ES200 blades (5 each); V13, and A13 blades; wrench and hex wrenches; case.

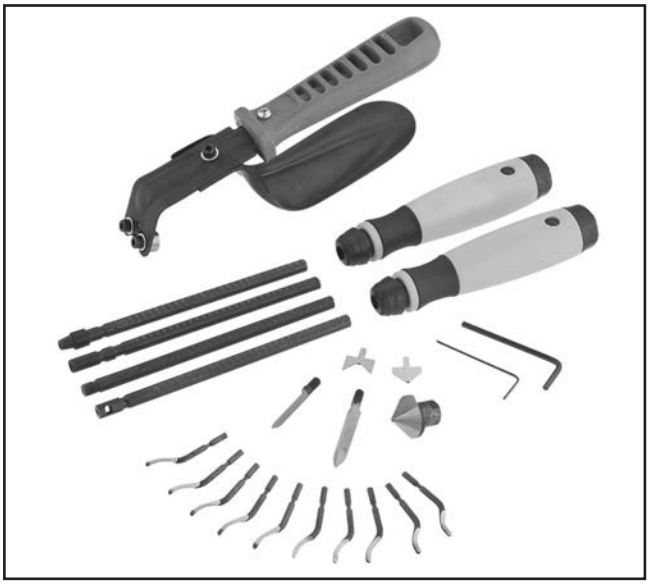

Figure 44. Model T25208 23-Pc. Deburring Set.

G9257—8" Dial Caliper
This traditional dial caliper is accurate to 0.001" and can measure outside surfaces, inside surfaces, and heights/depths. Features stainless steel, shock resistant construction and a dust proof display. An absolute treat for the perfectionist!

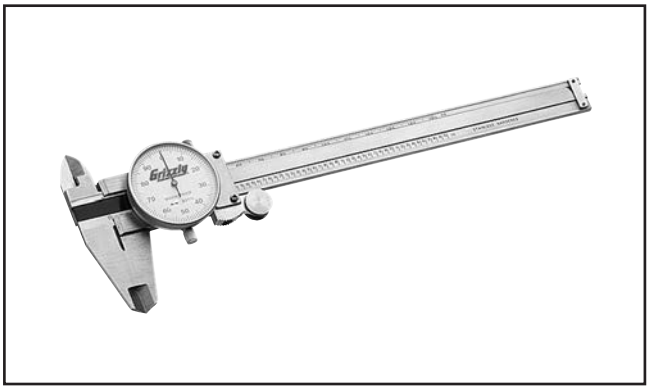

Figure 45. Model G9257 8" Dial Calipers.

H5503—Electric Sheet Metal Shear
This Electric Sheet Metal Shear has a ½ HP, 3.8 amp motor, variable-speed from 0-2500 RPM, can cut up to 14-gauge mild steel and 18-gauge stainless steel, and has 360° swivel head adjustment.

Figure 46. Model H5503 Electric Sheet Metal Shear.

T10717—50" Deluxe Foot Shear
This 50" Deluxe Foot Shear has 7⁄16" blades, 0"–35" front scale length, and 0"–24" rear stop scale length with dual locks and micro-adjustable dials. Will cut a maximum of 16-gauge mild steel at half width and 18-gauge at full width. The shear head sliding rails feature fully adjustable gib plates.

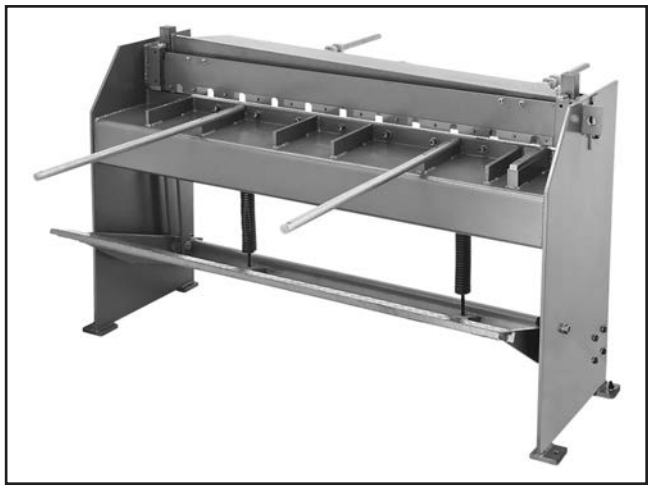

Figure 47. Model T10717 50" Deluxe Foot Shear.

T21321—Hand Punch
For repetitive hole punching, nothing beats the speed of a hand punch. With a throat depth of 6⁹⁄₃₂", this versatile punch can make a hole in mild steel up to ³⁄₁₆" thick. Measures 5½" wide by 31½" tall (without handle). Approximate shipping weight: 192 lbs.

Figure 48. Model T21321 Hand Punch.

T23085—Pneumatic Nibbler
This push-type Pneumatic Nibbler makes quick work of sheet steel up to 16-gauge without leaving burrs or deforming edges. Features 3800 strokes per minute, and adjustable die can be turned to suit various cutting positions.

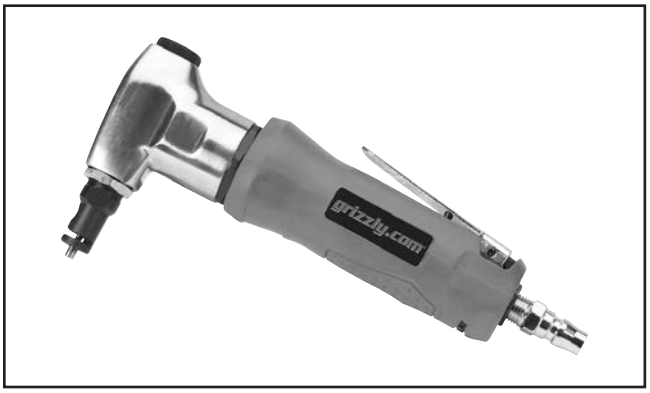

Figure 49. Model T23085 Pneumatic Nibbler.

Basic Eye Protection

T20501—Face Shield Crown Protector 4"
T20502—Face Shield Crown Protector 7"
T20503—Face Shield Window
T20451—"Kirova" Clear Safety Glasses
T20452—"Kirova" Anti-Reflective S. Glasses
T20456—DAKURA Safety Glasses, Black/Clear

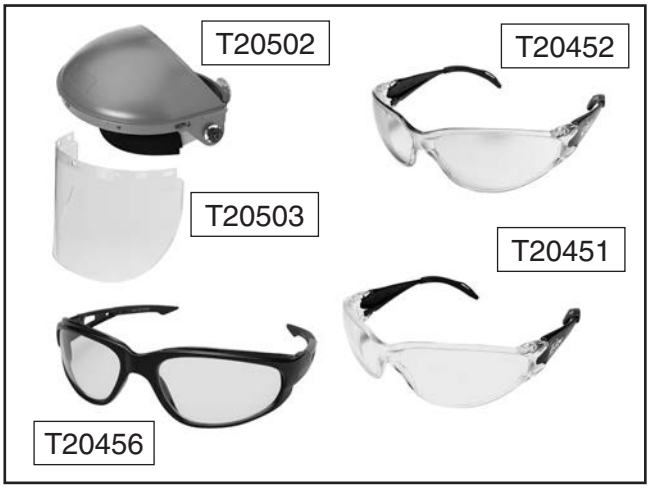

Figure 50. Assortment of basic eye protection.

Milwaukee® Performance Work Gloves

T31087—S
T31088—M
T31089—L
T31090—XL
T31091—XXL

Milwaukee® Performance Work Gloves are designed to provide ultimate durability and all day comfort.

Figure 51. Milwaukee® Performance Work Gloves.

Milwaukee® Aviation Snips

T31158—Long Cut Offset Left
T31159—Right Cutting Right Angle
T31160—Left Cutting Right Angle
T31179—Long Cut Straight
T31202—Straight Cutting Offset
T31203—Right Cutting Offset
T31204—Left Cutting Offset
T31233—Bulldog
T31267—Left Cutting
T31268—Right Cutting
T31269—Straight Cutting

Milwaukee® Aviation Snips are built for long life and durability. Forged blades deliver up to 10X more cuts than cast blades.

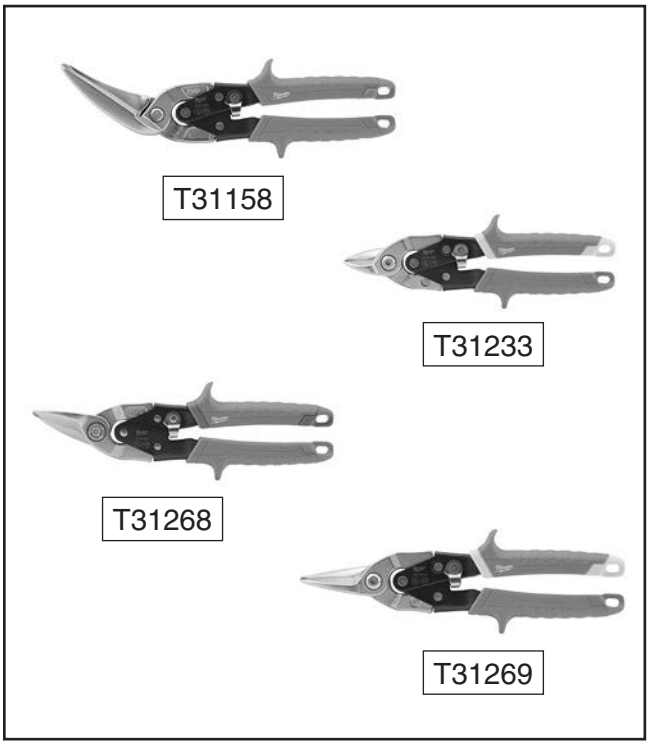

Figure 52. Assortment of Milwaukee® Aviation Snips.

SECTION 6: MAINTENANCE

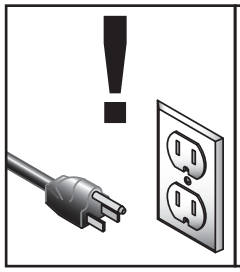

⚠WARNING

To reduce risk of shock or accidental startup, always disconnect machine from power before adjustments, maintenance, or service.

Schedule

For optimum performance from this machine, this maintenance schedule must be strictly followed.

Ongoing

To minimize your risk of injury and maintain proper machine operation, shut down the machine immediately if you ever observe any of the items below, and fix the problem before continuing operations:

- Loose mounting bolts.
- Worn or damaged clamping leaf or finger.
- Worn or damaged wires.
- Any other unsafe condition.

Weekly Maintenance

- Lubricate bending leaf hinges.
- Lubricate bending slide cap screws.
- Lubricate setback shafts.

Cleaning & Protecting

Use a brush to clear away any metal debris and dust from the clamping fixtures, bending leaf, and machine.

Use a shop rag to carefully apply a thin coat of quality metal protectant (see below for recommended products) to all exposed unpainted surfaces to prevent corrosion.

Recommended Metal Protectants

G5562—SLIPIT® 1 Qt. Gel
G5563—SLIPIT® 12 Oz. Spray
G2871—Boeshield® T-9 12 Oz. Spray
G2870—Boeshield® T-9 4 Oz. Spray
H3788—G96® Gun Treatment 12 Oz. Spray
H3789—G96® Gun Treatment 4.5 Oz. Spray

Figure 53. Recommended products for protecting unpainted cast iron/steel parts on machinery.

Lubrication

When lubricating this machine, first clean the components before lubricating them.

This step is critical because grime and dust build up on lubricated components, which makes them hard to move. Simply adding more lubricant will not result in smooth moving parts.

For lubricating, we suggest an ISO 68 equivalent lubricant like the one below.

SB1365—South Bend Way Oil-ISO 68

Figure 54. Recommended product for machine lubrication.

Bending Slide Cap Screws

Oil Type ..... SB1365 or ISO 68 Equivalent
Oil Amount..... 1 or 2 Drops
Lubrication Frequency .....Weekly

The angle indicator slide on one of the bending leaf handles must slide smoothly in order to achieve bends. Provide lubrication to locations shown in **Figure 55**.

Figure 55. Bending slide lubrication locations.

Setback Dial Shafts

Oil Type ..... SB1365 or ISO 68 Equivalent
Oil Amount..... 1 Drop at Each Location
Lubrication Frequency .....Weekly

Turn wide clamping leaf and slotted clamping leaf over then add one drop of oil to each setback shaft location like the one shown in **Figure 56**. Turn the setback adjustment dials to distribute the lubricant.

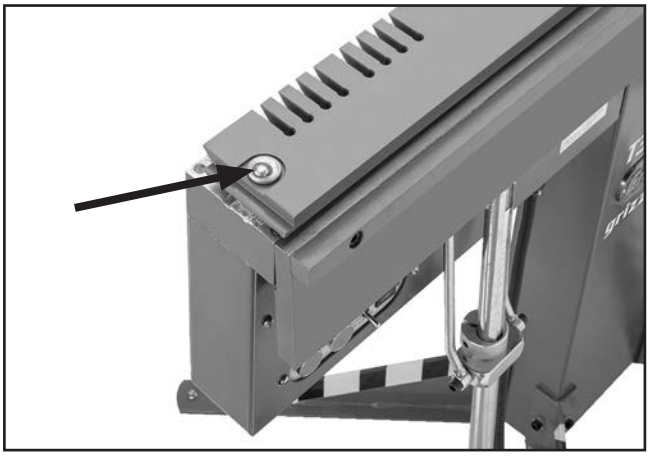

Figure 56. Setback dial shaft lubrication location.

Bending Leaf Hinges

Oil Type ..... SB1365 or ISO 68 Equivalent
Oil Amount..... 1 or 2 Drops
Lubrication Frequency .....Weekly

DISCONNECT MACHINE FROM POWER! The three bending leaf hinges support the bending leaf and undergo a lot of movement. Provide lubrication to locations shown in **Figure 57** to keep them functioning as they should.

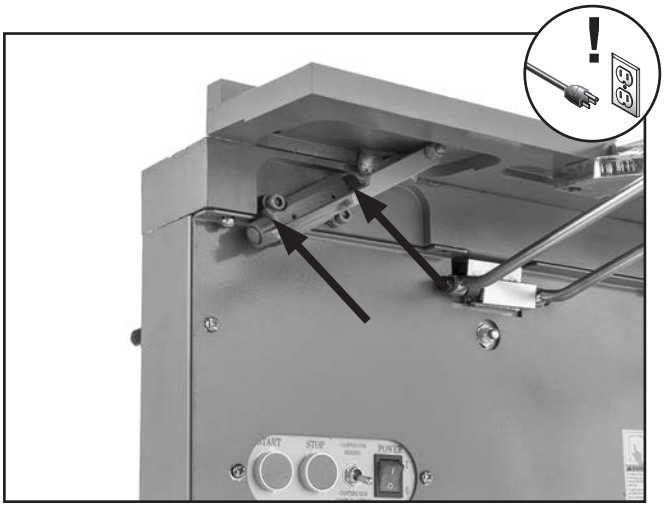

Figure 57. Bending leaf hinge lubrication locations.

SECTION 7: SERVICE

Review the troubleshooting procedures in this section if a problem develops with your machine. If you need replacement parts or additional help with a procedure, call our Technical Support. **Note:** *Please gather the serial number and manufacture date of your machine before calling.*

Troubleshooting

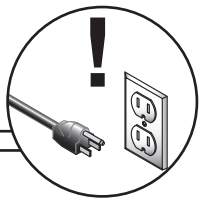

Motor & Electrical

Symptom	Possible Cause	Possible Solution
Machine does not magnetize, or power supply breaker immediately trips after startup.	1. Power switch in OFF position. 2. Bending leaf lifted before START button or pedal pressed. 3. Machine circuit breaker tripped. 4. Incorrect power supply voltage or circuit size. 5. Power supply circuit breaker tripped or fuse blown. 6. Start capacitor at fault. 7. Contactor not energized/at fault. 8. Wiring broken, disconnected, or corroded. 9. START button or pedal at fault. 10. Circuit board at fault. 11. Bridge rectifier is tripping circuit breaker.	1. Turn power switch to ON position. 2. Press START button or pedal before lifting bending leaf. 3. Reset machine circuit breaker. 4. Ensure correct power supply voltage and circuit size. 5. Ensure circuit is sized correctly and free of shorts. Reset circuit breaker or replace fuse. 6. Test/replace if at fault. 7. Test all legs for power; replace if necessary. 8. Fix broken wires or disconnected/corroded connections. 9. Replace button/pedal. 10. Inspect/replace if at fault. 11. Replace bridge rectifier.
Magnet is underpowered.	1. Wrong workpiece material. 2. Magnet micro-switch needs adjustment or is at fault. 3. Machine overheated. 4. Run capacitor at fault. 5. Contactor not energized/at fault.	1. Use correct type/gauge of metal. 2. Adjust micro-switch (**Page 36**); replace. 3. Let cool, reduce workload. 4. Test/repair/replace. 5. Test all legs for power; repair/replace if at fault.
Clamping leaf/ fingers will not release.	1. Magnet activated without workpiece. 2. De-magnetizing circuit of time relay at fault.	1. Do not activate magnet without workpiece present. Disconnect from power to release clamping fixtures. 2. Clean sticky contacts on time relay; replace.

Operation

Symptom	Possible Cause	Possible Solution
Heavy resistance during bends.	1. Machine capacities exceeded. 2. Not enough setback.	1. Use sheet metal gauge/thickness size within machine capacities (**Page 5**). 2. Properly calculate and adjust setback (**Page 26**).
Bend radius is not consistent across workpiece.	1. Clamping leaf not parallel with bending leaf. 2. Clamping fingers not properly aligned. 3. Too much setback.	1. Adjust clamping leaf parallel with bending leaf (**Page 26**). 2. Properly align clamping fingers (**Page 25**). 3. Properly calculate and adjust setback (**Page 26**).
Workpiece moves while bending.	1. Machine capacities exceeded. 2. Workpiece length does not extend a minimum of 2" under clamping fixture.	1. Use sheet metal gauge/thickness size within machine capacities (**Page 5**). 2. Extend workpiece a minimum of 2" under clamping fixture (**Page 24**, **25**, **26**)

Adjusting Magnet Micro-Switch

While the START buttons and foot pedal activate the pre-clamp magnet, the full force of the magnet will not activate until the bending leaf is lifted. There is a micro-switch that stays depressed while the bending leaf is down, but once the leaf is lifted, the switch is no longer depressed, and the full magnet is activated (see **Figure 58**).

If the full magnet force is not being activated, the position of the micro-switch may need to be adjusted.

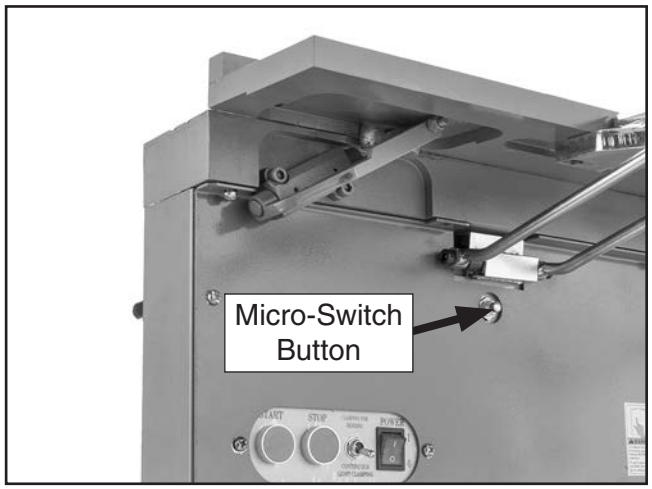

Figure 58. Location of micro-switch under bending leaf.

Tools Needed	**Qty**
Hex Wrench 6mm	1
Phillips Head Screwdriver #2	1
Open-End Wrench 19mm	1

To adjust magnet micro-switch:

1. DISCONNECT MACHINE FROM POWER!

2. Lift and lower bending leaf a few times and listen for micro-switch "click" when bending leaf is lowered.

— If there *is* a click, micro-switch is adjusted correctly. Switch may need to be replaced.

— If there *is not* a click, micro-switch requires adjustment. Proceed to **Step 3**.

3. Remove a work backstop collar from one of the backstop bars.

4. Lift bending leaf to 90˚ and lock in place by installing and tightening backstop collar on angle indicator handle (see **Figure 59**).

Figure 59. Bending leaf locked at 90˚.

5. Confirm that cap screws at both ends of bending leaf hinge shaft are tight (see **Figure 60**).

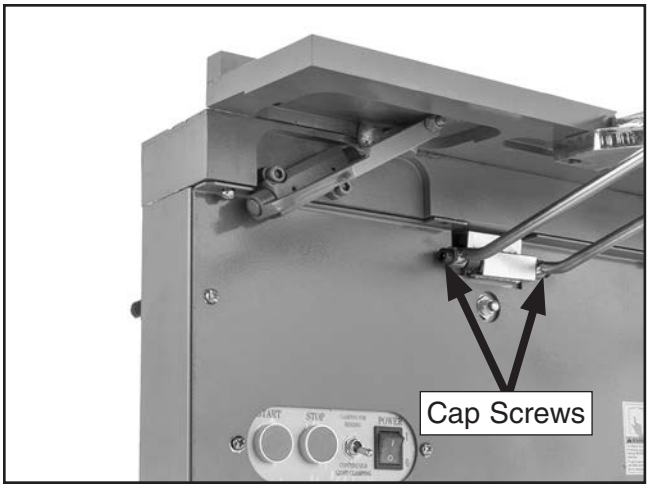

Figure 60. Bending leaf hinge shaft cap screw locations.

— If cap screws *are not* tight, tighten cap screws. Loosen backstop collar to repeat test from **Step 2**. Proceed to **Step 6**, if applicable.

— If cap screws *are* tight, proceed to **Step 6**.

6. Remove (4) Phillips head screws and control panel cover (see **Figure 61**).

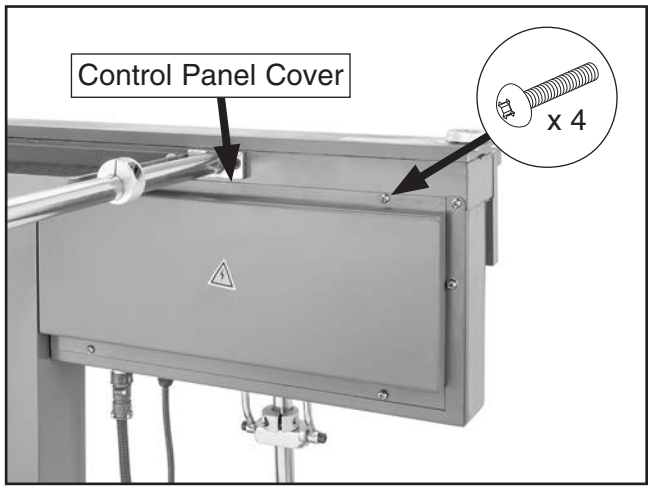

Figure 61. Control panel and securing Phillips head screws.

7. Adjust (2) hex nuts on micro-switch shown in **Figure 62** until micro-switch clicks when bending leaf is lowered.

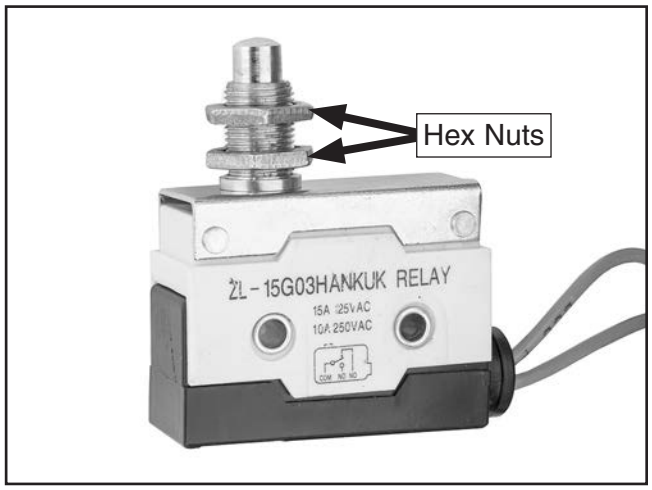

Figure 62. Micro-switch hex nut locations (removed from control panel for clarity).

8. Install control panel cover.

9. Connect machine to power and perform bending operation to test magnet and switch.

   — If magnet functions correctly, micro-switch is adjusted correctly.

   — If magnet *does not* function correctly, micro-switch requires replacement.

SECTION 8: WIRING

These pages are current at the time of printing. However, in the spirit of improvement, we may make changes to the electrical systems of future machines. Compare the manufacture date of your machine to the one stated in this manual, and study this section carefully.

If there are differences between your machine and what is shown in this section, call Technical Support at (570) 546-9663 for assistance BEFORE making any changes to the wiring on your machine. An updated wiring diagram may be available. **Note:** *Please gather the serial number and manufacture date of your machine before calling. This information can be found on the main machine label.*

⚠WARNING
Wiring Safety Instructions

SHOCK HAZARD. Working on wiring that is connected to a power source is extremely dangerous. Touching electrified parts will result in personal injury including but not limited to severe burns, electrocution, or death. Disconnect the power from the machine before servicing electrical components!

MODIFICATIONS. Modifying the wiring beyond what is shown in the diagram may lead to unpredictable results, including serious injury or fire. This includes the installation of unapproved aftermarket parts.

WIRE CONNECTIONS. All connections must be tight to prevent wires from loosening during machine operation. Double-check all wires disconnected or connected during any wiring task to ensure tight connections.

CIRCUIT REQUIREMENTS. You MUST follow the requirements at the beginning of this manual when connecting your machine to a power source.

WIRE/COMPONENT DAMAGE. Damaged wires or components increase the risk of serious personal injury, fire, or machine damage. If you notice that any wires or components are damaged while performing a wiring task, replace those wires or components.

MOTOR WIRING. The motor wiring shown in these diagrams is current at the time of printing but may not match your machine. If you find this to be the case, use the wiring diagram inside the motor junction box.

CAPACITORS/INVERTERS. Some capacitors and power inverters store an electrical charge for up to 10 minutes after being disconnected from the power source. To reduce the risk of being shocked, wait at least this long before working on capacitors.

EXPERIENCING DIFFICULTIES. If you are experiencing difficulties understanding the information included in this section, contact our Technical Support at (570) 546-9663.

NOTICE

The photos and diagrams included in this section are best viewed in color. You can view these pages in color at www.grizzly.com.

COLOR KEY

BLACK	Bk	BLUE	Bl	YELLOW	Yl	LIGHT BLUE	Lb
WHITE	Wt	BROWN	Br	YELLOW GREEN	Yg	BLUE WHITE	Bw
GREEN	Gn	GRAY	Gy	PURPLE	Pu	TUR-QUOISE	Tu
RED	Rd	ORANGE	Or	PINK	Pk		

Wiring Diagram

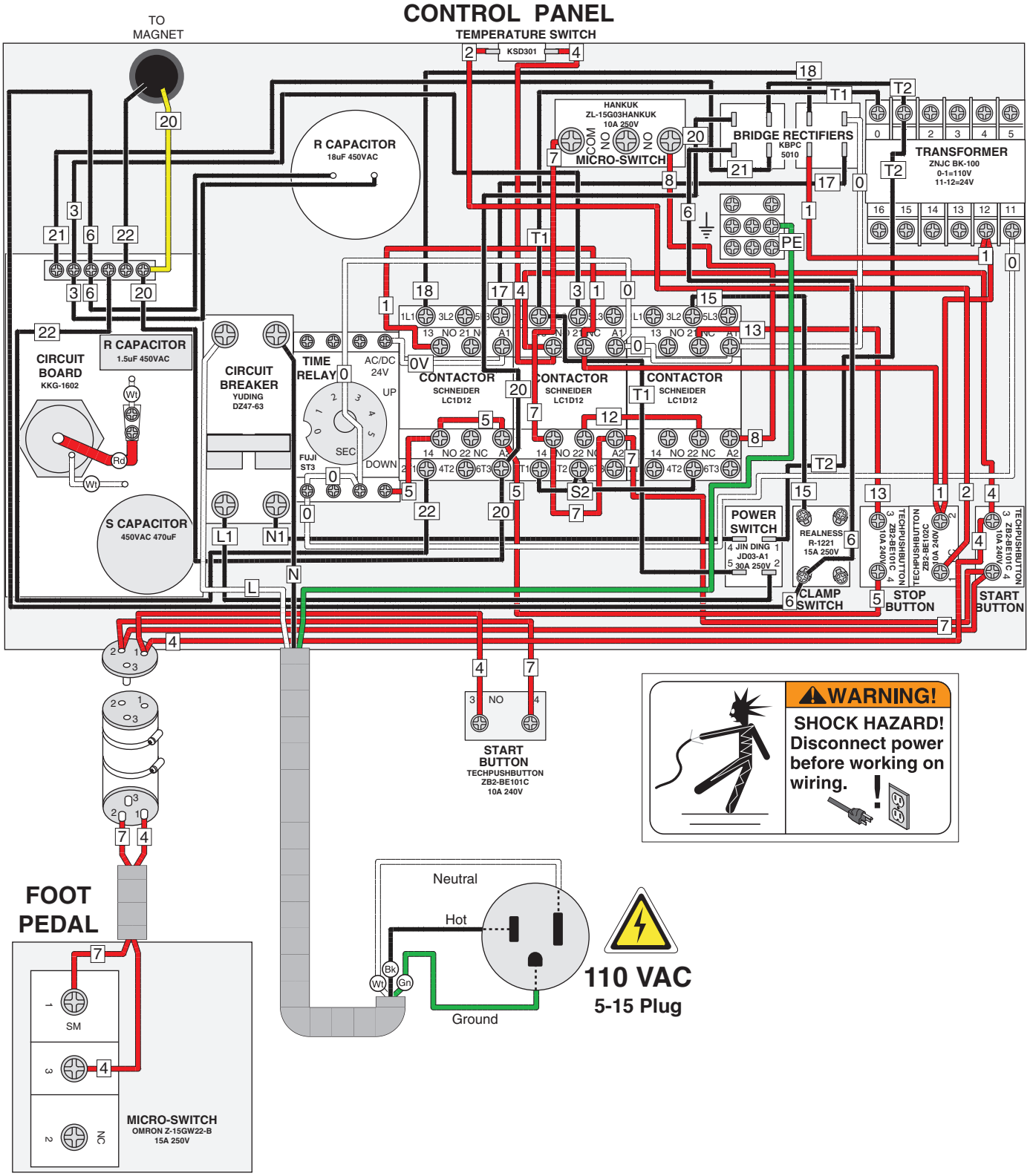

STOP READ ELECTRICAL SAFETY ON PAGE 38!

Electrical Component Photos

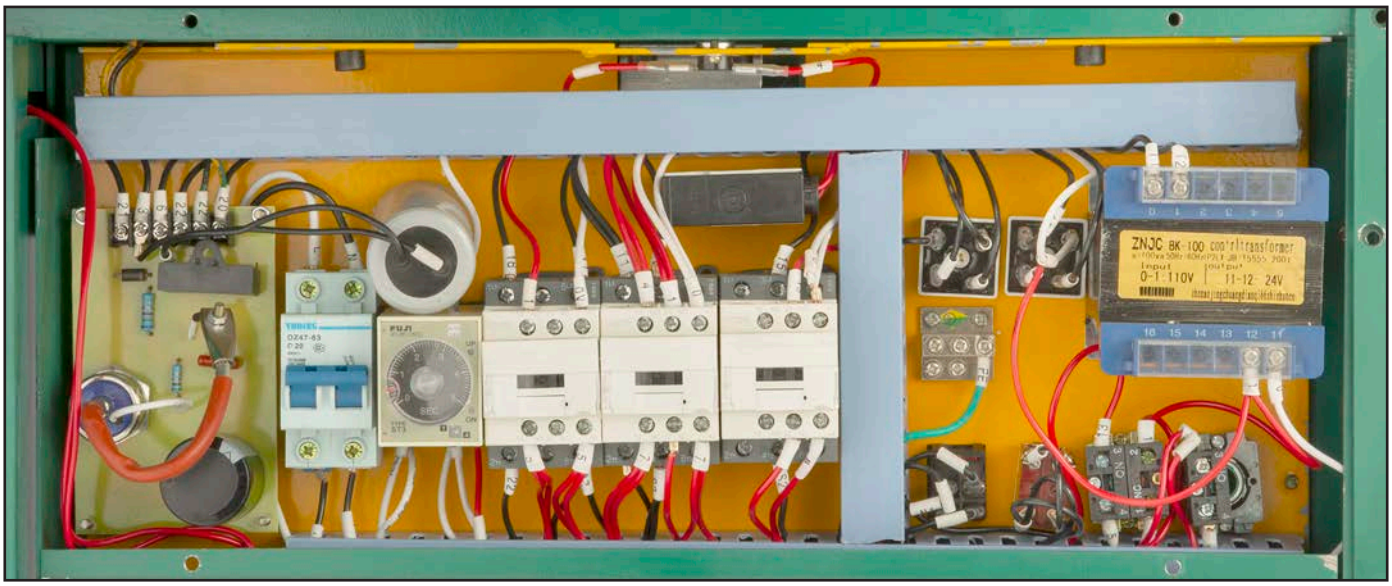

Figure 63. Control panel electrical components.

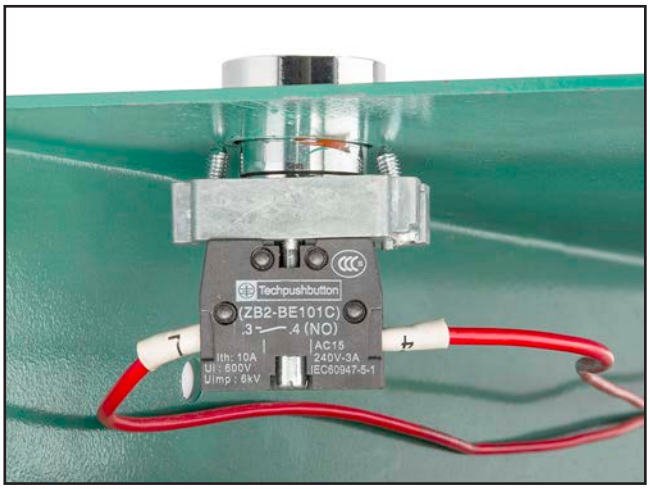

Figure 64. Stand-alone START button.

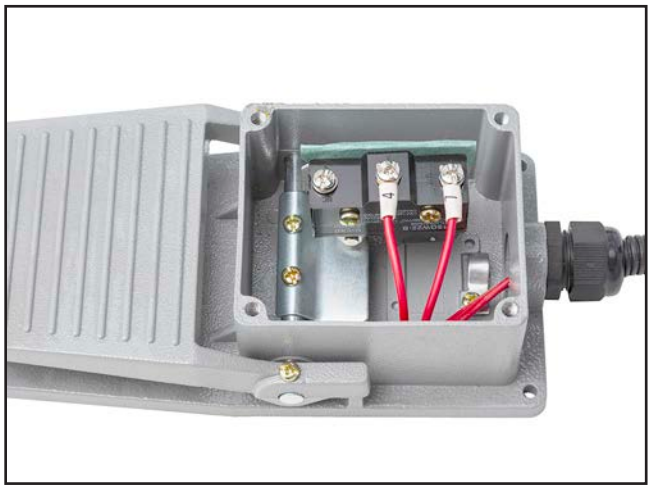

Figure 65. Start foot pedal.

READ ELECTRICAL SAFETY ON PAGE 38!

SECTION 9: PARTS

We do our best to stock replacement parts when possible, but we cannot guarantee that all parts shown are available for purchase. Call **(800) 523-4777** or visit **www.grizzly.com/parts** to check for availability.

Main

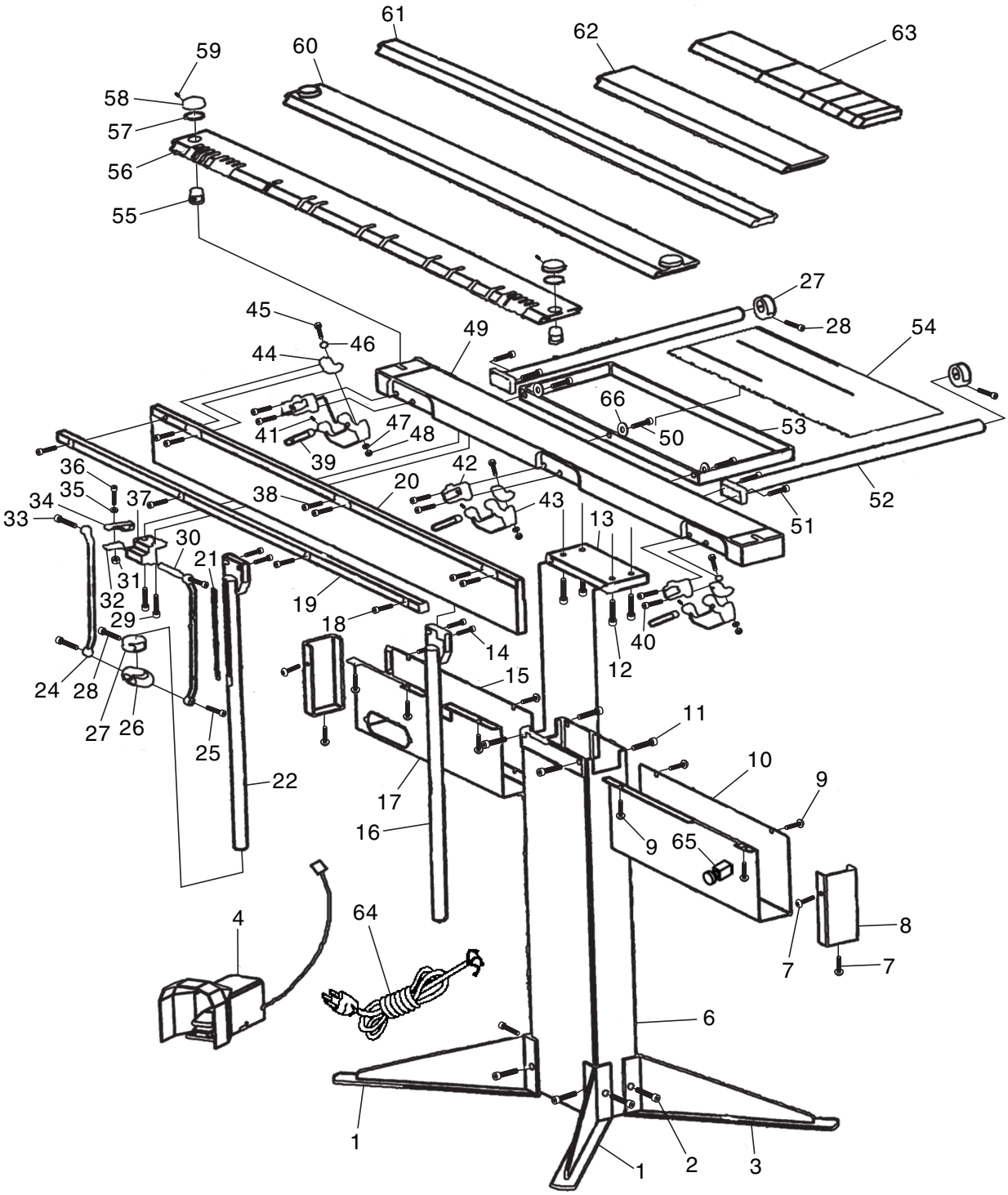

Main Parts List

REF	PART #	DESCRIPTION
1	PT30297001	BASE FOOT (FRONT)
2	PT30297002	CAP SCREW M10-1.5 X 20
3	PT30297003	BASE FOOT (REAR)
4	PT30297004	FOOT PEDAL ASSEMBLY
6	PT30297006	STAND
7	PT30297007	PHLP HD SCR M6-1 X 12
8	PT30297008	END PLATE
9	PT30297009	PHLP HD SCR M6-1 X 12
10	PT30297010	SHIELD COVER (RIGHT)
11	PT30297011	CAP SCREW M8-1.25 X 20
12	PT30297012	CAP SCREW M8-1.25 X 30
13	PT30297013	CONNECTING PLATE
14	PT30297014	CAP SCREW M8-1.25 X 16
15	PT30297015	ELECTRICAL BOX COVER
16	PT30297016	HANDLE (RIGHT)
17	PT30297017	SHIELD COVER (LEFT)
18	PT30297018	CAP SCREW M8-1.25 X 20
19	PT30297019	BENDING LEAF EXTENSION
20	PT30297020	BENDING LEAF
21	PT30297021	SCALE
22	PT30297022	HANDLE (LEFT)
23	PT30297023	BUTTON HD CAP SCR M8-1.25 X 20
24	PT30297024	CONNECTING ROD
26	PT30297026	SLIDE
27	PT30297027	STOP COLLAR
28	PT30297028	CAP SCREW M8-1.25 X 20
29	PT30297029	CAP SCREW M8-1.25 X 20
30	PT30297030	SHAFT
31	PT30297031	HEX NUT M6-1
32	PT30297032	BLOCK (LOWER)
33	PT30297033	CAP SCREW M8-1.25 X 20
34	PT30297034	BLOCK (UPPER)

REF	PART #	DESCRIPTION
35	PT30297035	LOCK WASHER 6MM
36	PT30297036	CAP SCREW M6-1 X 25
37	PT30297037	BRACKET
38	PT30297038	CAP SCREW M8-1.25 X 20
39	PT30297039	PIN 12 X 100
40	PT30297040	CAP SCREW M8-1.25 X 20
41	PT30297041	SET SCREW M5-.8 X 4
42	PT30297042	FIXED BODY
43	PT30297043	HINGE BODY
44	PT30297044	U-BLOCK
45	PT30297045	HEX BOLT M6-1 X 50
46	PT30297046	BALL SEAT
47	PT30297047	LOCK WASHER 6MM
48	PT30297048	LOCK NUT M6-1
49	PT30297049	WORKBENCH
50	PT30297050	CAP SCREW M8-1.25 X 16
51	PT30297051	CAP SCREW M8-1.25 X 16
52	PT30297052	BACKSTOP BAR
53	PT30297053	TRAY
54	PT30297054	RUBBER MAT
55	PT30297055	DIAL SHAFT
56	PT30297056	SLOTTED CLAMPING LEAF
57	PT30297057	DIAL SPRING
58	PT30297058	INDICATOR DIAL
59	PT30297059	SET SCREW M6-1 X 8
60	PT30297060	WIDE CLAMPING LEAF
61	PT30297061	NARROW CLAMPING LEAF
62	PT30297062	CLAMPING LEAF 23"
63	PT30297063	CLAMPING FINGER SET
64	PT30297064	POWER CORD 16G 3W 72" 5-15P
65	PT30297065	BUTTON SWITCH 29MM GRN
66	PT30297066	FLAT WASHER 8MM

Electrical Components

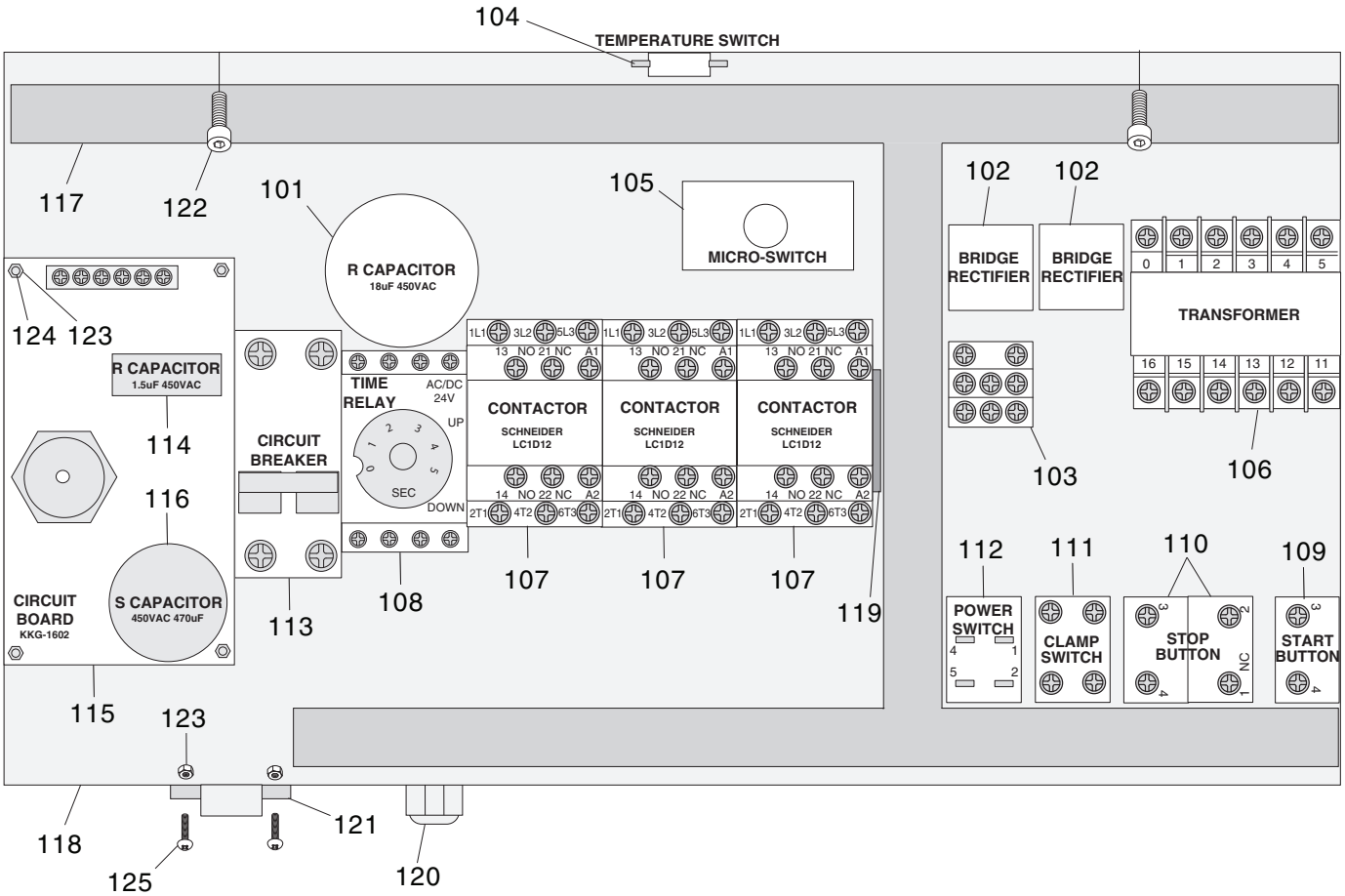

REF	PART #	DESCRIPTION
101	PT30297101	R CAPACITOR 18M 450V 1-3/8 X 3
102	PT30297102	BRIDGE RECTIFIER KBPC 5010
103	PT30297103	TERMINAL BAR 3P
104	PT30297104	TEMPERATURE SWITCH KSD301
105	PT30297105	MICRO-SWITCH HANKUK ZL-15G03
106	PT30297106	TRANSFORMER ZNJC BK100 220V
107	PT30297107	CONTACTOR SCHNEIDER LC1D12 220V
108	PT30297108	TIME DELAY FUJI ST3 24V
109	PT30297109	BUTTON SWITCH 29MM GRN
110	PT30297110	BUTTON SWITCH 29MM RED
111	PT30297111	TOGGLE SWITCH REALNESS R-1221 15A 250V
112	PT30297112	ON/OFF ROCKER SWITCH JD03-A1 30A 250V
113	PT30297113	CIRCUIT BREAKER 20A YUDING DZ47-63 C20

REF	PART #	DESCRIPTION
114	PT30297114	R CAPACITOR 1.5M 450V 1-1/2 X 1/2 X 1
115	PT30297115	CIRCUIT BOARD KKG-1602
116	PT30297116	S CAPACITOR 470M 450V 1-3/8 X 2
117	PT30297117	WIRE LOOM
118	PT30297118	ELECTRICAL PANEL MOUNTING PLATE
119	PT30297119	DIN RAIL
120	PT30297120	STRAIN RELIEF TYPE-3 M14-2
121	PT30297121	CIRCULAR CONNECTION SOCKET
122	PT30297122	CAP SCREW M8-1.25 X 10
123	PT30297123	HEX NUT M4-.7
124	PT30297124	PHLP HD SCR M4-.7 X 40
125	PT30297125	PHLP HD SCR M4-.7 X 10

Labels & Cosmetics

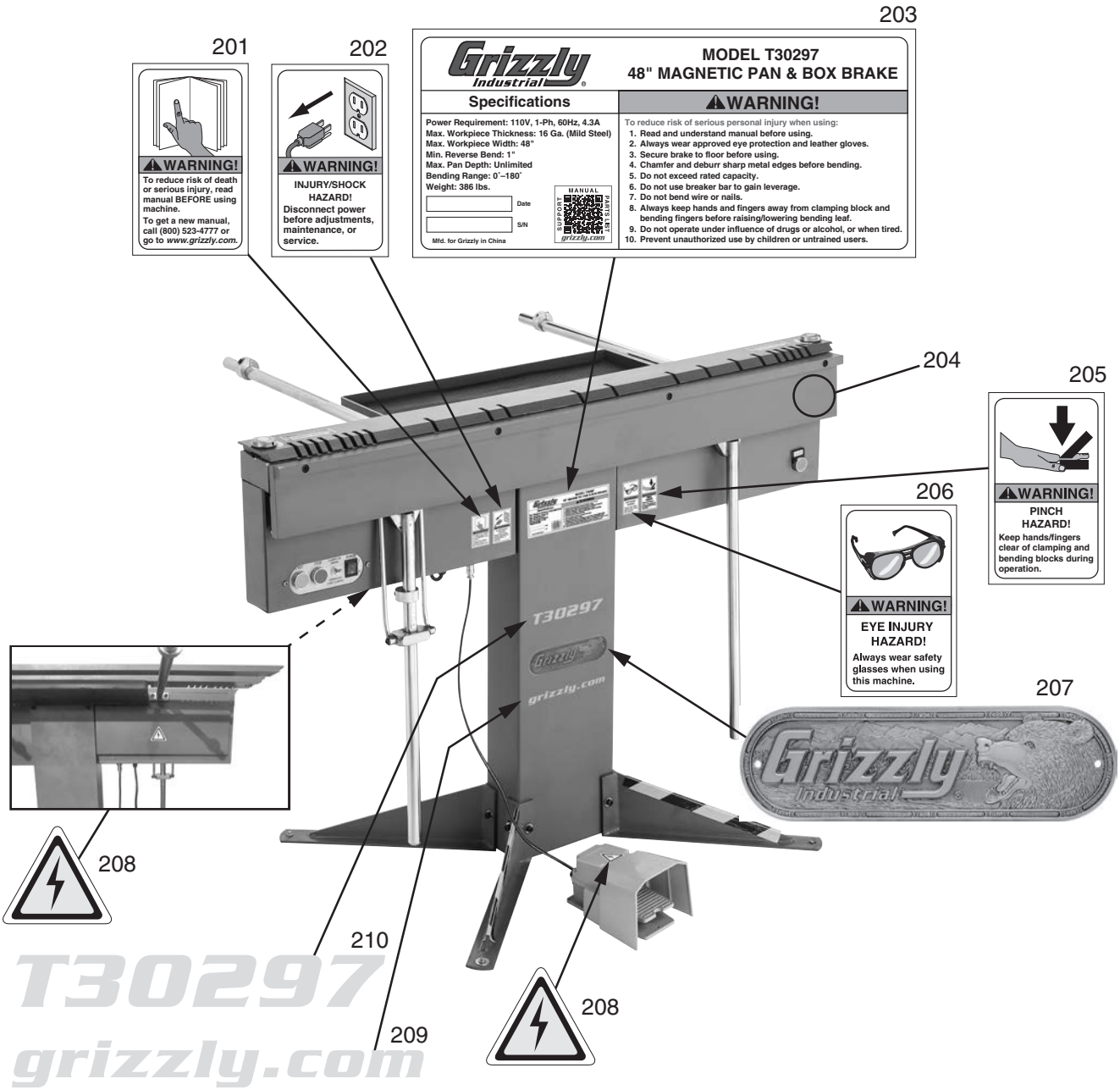

REF	PART #	DESCRIPTION
201	PT30297201	READ MANUAL LABEL
202	PT30297202	DISCONNECT POWER LABEL
203	PT30297203	MACHINE ID LABEL
204	PT30297204	TOUCH-UP PAINT, GRIZZLY GREEN
205	PT30297205	PINCH HAZARD LABEL

REF	PART #	DESCRIPTION
206	PT30297206	EYE INJURY WARNING LABEL
207	PT30297207	GRIZZLY NAMEPLATE
208	PT30297208	ELECTRICITY WARNING LABEL
209	PT30297209	GRIZZLY.COM LABEL
210	PT30297210	MODEL NUMBER LABEL

⚠WARNING

Safety labels help reduce the risk of serious injury caused by machine hazards. If any label comes off or becomes unreadable, the owner of this machine MUST replace it in the original location before resuming operations. For replacements, contact (800) 523-4777 or www.grizzly.com.

WARRANTY & RETURNS

Grizzly Industrial, Inc. warrants every product it sells for a period of **1 year** to the original purchaser from the date of purchase. This warranty does not apply to defects due directly or indirectly to misuse, abuse, negligence, accidents, repairs or alterations or lack of maintenance. This is Grizzly's sole written warranty and any and all warranties that may be implied by law, including any merchantability or fitness, for any particular purpose, are hereby limited to the duration of this written warranty. We do not warrant or represent that the merchandise complies with the provisions of any law or acts unless the manufacturer so warrants. In no event shall Grizzly's liability under this warranty exceed the purchase price paid for the product and any legal actions brought against Grizzly shall be tried in the State of Washington, County of Whatcom.

We shall in no event be liable for death, injuries to persons or property or for incidental, contingent, special, or consequential damages arising from the use of our products.

The manufacturers reserve the right to change specifications at any time because they constantly strive to achieve better quality equipment. We make every effort to ensure that our products meet high quality and durability standards and we hope you never need to use this warranty.

In the event you need to use this warranty, contact us by mail or phone and give us all the details. We will then issue you a "Return Number," which must be clearly posted on the outside as well as the inside of the carton. We will not accept any item back without this number. Proof of purchase must accompany the merchandise.

Please feel free to write or call us if you have any questions about the machine or the manual.

Thank you again for your business and continued support. We hope to serve you again soon.

To take advantage of this warranty, you must register it at **https://www.grizzly.com/secureforms/warranty-card**, or you can scan the QR code below to be automatically directed to our warranty registration page. Enter all applicable information for the product.

WARRANTY

grizzly.com