MODEL T34658
42" 6-DRAWER TOP TOOL CHEST
INSTRUCTIONS

For questions or help with this product contact Tech Support at (570) 546-9663 or techsupport@grizzly.com

Introduction

The Model T34658 features a built-in power strip and a locking cantilever lid with lift assist. Six locking drawers are supported by ball-bearing slides.



Figure 1. Model T34658.

⚠WARNING

- **To reduce risk of crushing injuries from tool chest tipping over on you:**
  - **— Do not stand on chest or in drawers.**
  - **— Only open one drawer at a time.**
  - **— Only move or transport chest with all drawers closed and locked.**
- **Do not exceed weight capacities:**
  - **— Per large drawer: 65 lbs.**
  - **— Per small drawer: 45 lbs.**
  - **— Chest plus contents: 475 lbs.**
- **Do not allow children to have unsupervised access to chest.**

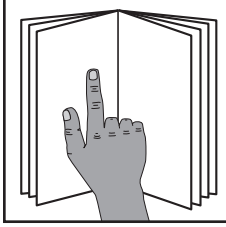

⚠WARNING

To reduce your risk of serious injury, read this entire manual BEFORE using chest.

Specifications

Product Weight	106 lbs.
Dimensions	42 x 18 x 22½ in.
Maximum Weight Capacity:	
Per Large Drawer	65 lbs.
Per Small Drawer	45 lbs.
Total (Chest Plus Contents)	475 lbs.

Inventory

	Description	Qty
A.	Tool Chest	1
B.	Keys	2

Note: *Keys may be stored in drawers.*

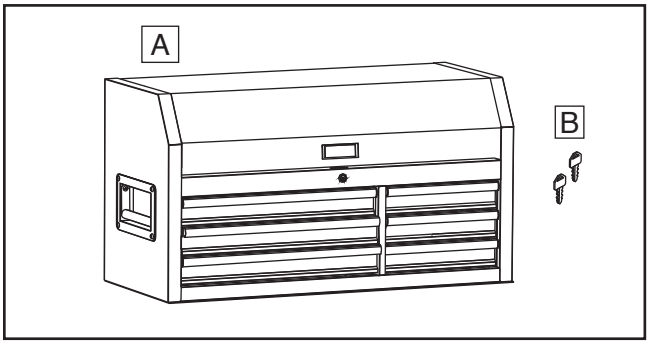

Figure 2. Inventory.

COPYRIGHT © FEBRUARY, 2026 BY GRIZZLY INDUSTRIAL, INC.
NO PORTION OF THIS MANUAL MAY BE REPRODUCED IN ANY SHAPE OR FORM WITHOUT THE WRITTEN APPROVAL OF GRIZZLY INDUSTRIAL, INC.
(FOR MODELS MFD. SINCE 01/26) #SG 23919 PRINTED IN CAMBODIA V1.02.26

******Keep for Future Reference******

Power Strip

The T34658 features a pre-installed power strip with four 5-15 outlets and two USB ports conveniently located for easy access. The included power strip has the following ratings:

Max. Amperage Load.....15A
Max. Voltage 125V
Cycle..... 50/60 Hz
Max. Wattage 1875W
USB Output..... 5VDC, 2.1A

⚠WARNING

- **Do not connect to plug receptacle via extension cords or in series with other power strips.**
- **Keep electrical connections clear of flammable materials.**
- **Keep electrical connections dry. Do not use in damp or wet conditions.**
- **Do not connect devices to power strip that draw more than listed power strip rating. Equipment must be used in accordance with any instructions or labeling.**
- **Power strips are designed for use with low-powered loads, such as battery chargers. Not designed for use with high-powered loads, such as space heaters or microwaves.**
- **Do not run cord under floor coverings or where it may be tripped over.**
- **Not meant for outdoor use.**
- **Prevent unauthorized use by children or untrained users.**

125V Circuit Requirements

This power strip is prewired to connect to a power supply circuit that has a verified ground and meets the following requirements:

Nominal Voltage 110V, 115V, 120V, 125V
Cycle.....60 Hz
Phase..... Single-Phase
Power Supply Circuit ..... 15 Amps
Plug/Receptacle ..... NEMA 5-15

A power supply circuit includes all electrical equipment between the breaker box or fuse panel in the building and the power strip. The power supply circuit used for this power strip must be sized to safely handle the full-load current drawn from the power strip for an extended period of time. (If this power strip is connected to a circuit protected by fuses, use a time delay fuse marked D.)

Grounding & Plug Requirements

This power strip MUST be grounded. In the event of certain malfunctions or breakdowns, grounding reduces the risk of electric shock by providing a path of least resistance for electric current.

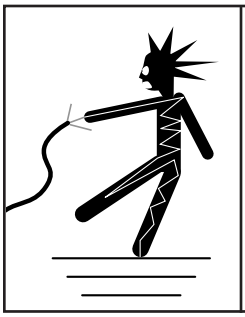

⚠WARNING

Electrocution, fire, shock, or equipment damage may occur if power strip is not properly grounded and connected to power supply.

This power strip is equipped with a power cord that has an equipment-grounding wire and a grounding plug. Only insert plug into a matching receptacle (outlet) that is properly installed and grounded in accordance with all local codes and ordinances. DO NOT modify the provided plug!

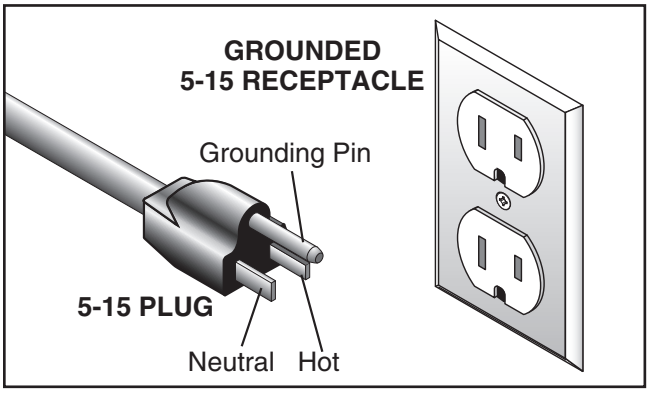

Figure 3. Typical 5-15 plug and receptacle.

Removing & Installing Drawers

1. Remove contents from one drawer, then fully extend drawer.

2. Simultaneously lift lever *up* on left drawer slide, while pushing lever *down* on right drawer slide, then remove drawer from chest (see **Figure 4**).

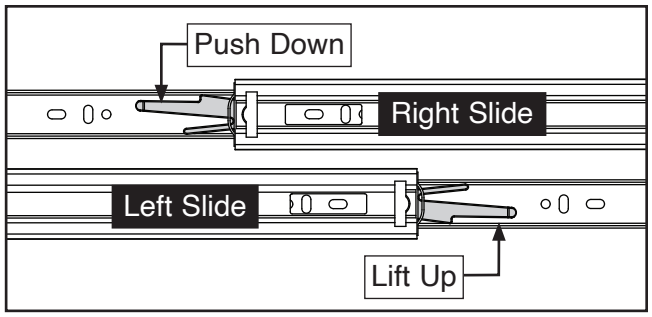

Figure 4. Removing drawers.

3. To install drawer, extend one outer rail until it slides partially onto corresponding inner rail, then repeat on other side (see **Figure 5**).

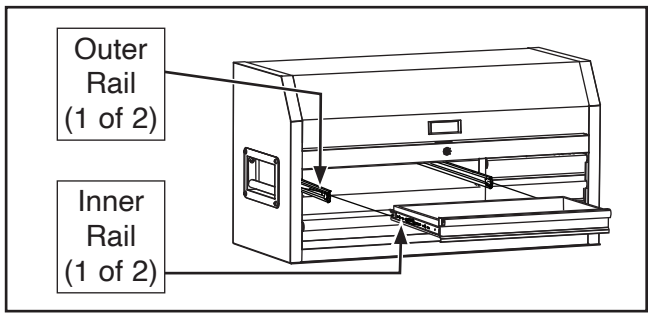

Figure 5. Installing drawer.

4. Slowly push drawer until it is fully closed, then test to verify drawer slides smoothly and stops at full extension.

Locking Drawers

Use the included keys to secure the drawers. Only completely closed drawers will lock.

Maintenance

- Use soft, clean cloth and soapy water (use regular dish soap) to remove grease, dirt, or oil. Do not use solvents or flammable liquids.
- Lubricate drawer slides as needed with dry lubricant, such as Grizzly's Model T33964 Quest Micro-Dry PTFE Dry Lubricant.
- Use graphite lubricant on lock annually.

Attaching to Roller Cabinet (Optional)

The Model T34658 can be used with the Model T34659 42" Tool Roller Cabinet (see **Figure 6**). This mobile unit features five locking drawers with ball-bearing slides, one locking cabinet, and four wheel casters (two locking).



Figure 6. T34659 42" 6-Drawer Tool Roller Cabinet.

Items Needed	**Qty**
Additional Person	1
Wrench or Socket 14mm	1

To attach top tool chest to roller cabinet:

1. Lock swivel casters on roller cabinet.

2. With help from an assistant, place tool chest on top of rolling cabinet.

3. Attach (2) connector brackets to back side of cabinet/chest with (4) M6-1 x 20 hex bolts (see **Figure 7**).

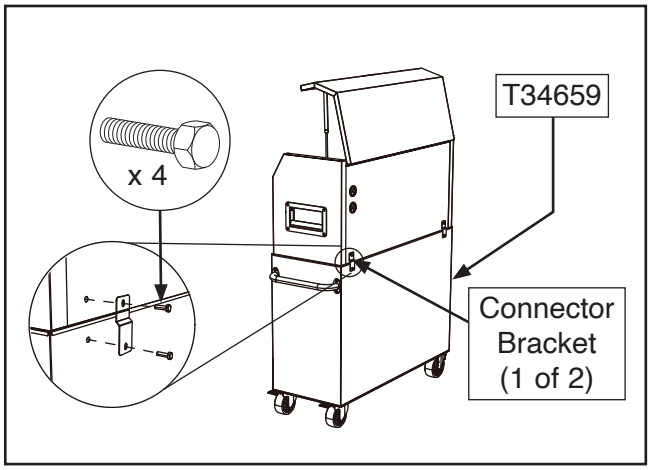

Figure 7. Model T34659 attached with connector brackets.

T34658 Parts

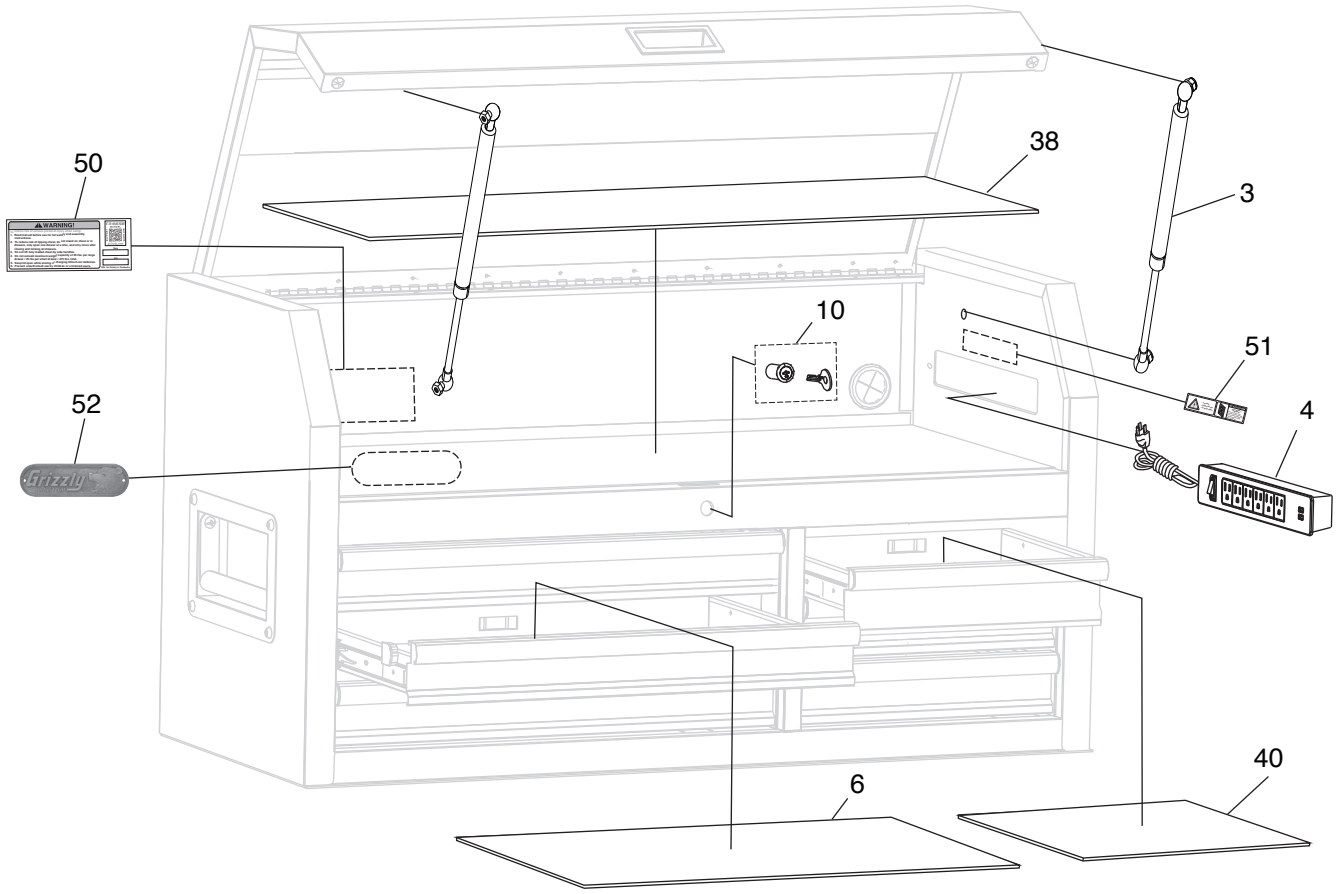

REF	PART #	DESCRIPTION
3	PT34658003	GAS STRUT
4	PT34658004	POWER STRIP W/USB 125V 5-15P
6	PT34658006	DRAWER LINER, MED 22-1/4" X 15-1/4"
10	PT34658010	LOCK SET W/2 KEYS
38	PT34658038	CHEST LINER 38-3/8" X 16-1/4"

REF	PART #	DESCRIPTION
40	PT34658040	DRAWER LINER, SM 15-1/4" X 12-1/2"
50	PT34658050	MACHINE ID LABEL
51	PT34658051	COMBO ELECTRICITY LABEL
52	PT34658052	GRIZZLY OBLONG NAMEPLATE-MINI

Please Note: *We do our best to stock replacement parts whenever possible, but we cannot guarantee that all parts shown here are available for purchase. Call* ***(800) 523-4777*** *or visit our online parts store at* ***www.grizzly.com*** *to check for availability.*

BUY PARTS ONLINE AT GRIZZLY.COM!
Scan QR code to visit our Parts Store.