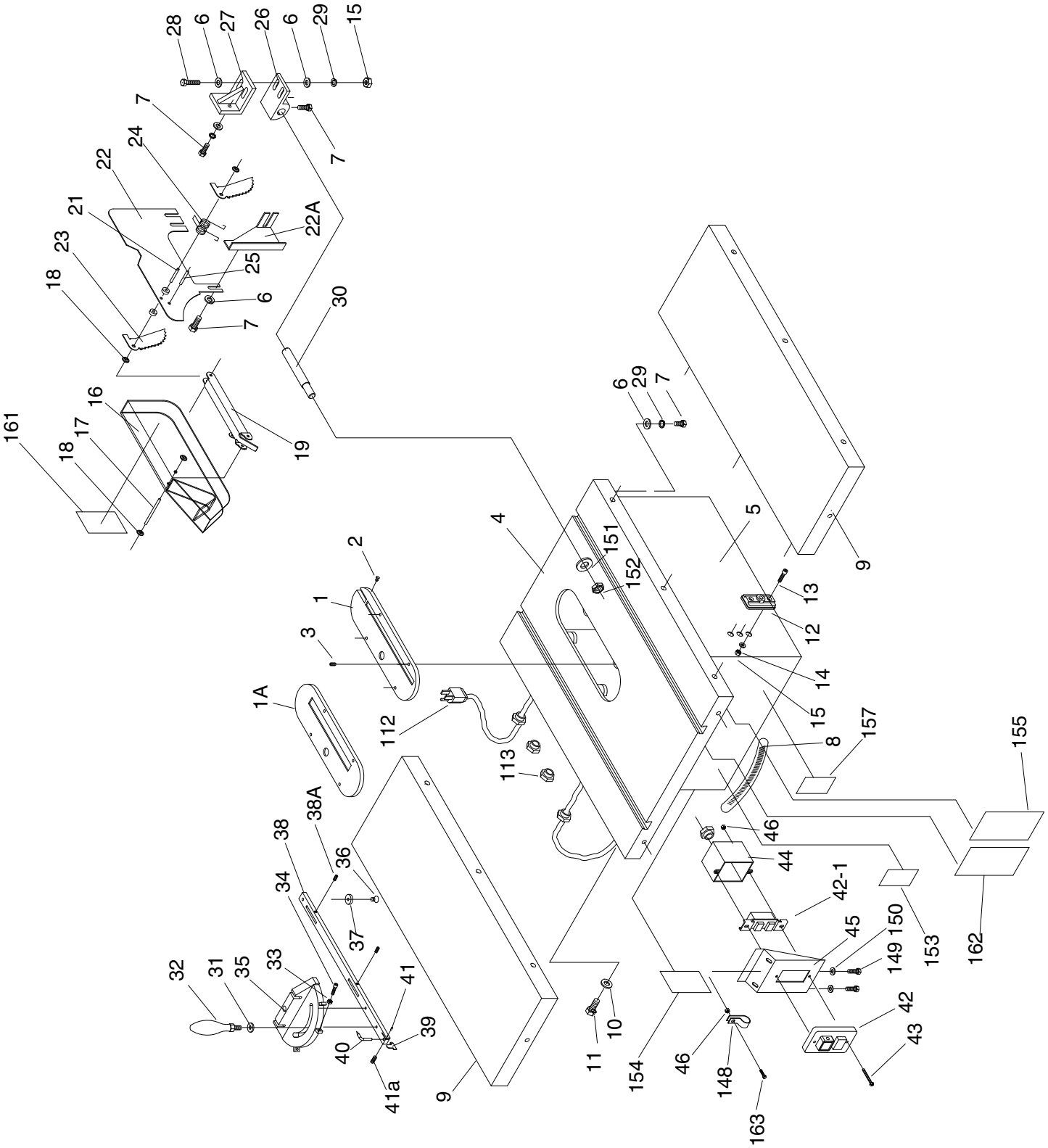
28
6
27
26
6
29
15
7
7
24
22
21
22A
23
25
18
6
7
30
16
161
17
18
19
6
29
7
4
151
152
5
9
2
1
3
13
12
14
15
1A
112
113
8
157
155
38A
38
36
34
46
44
42-1
37
45
150
149
153
162
32
31
35
33
41
39
40
41a
9
11
10
154
46
148
163
42
43

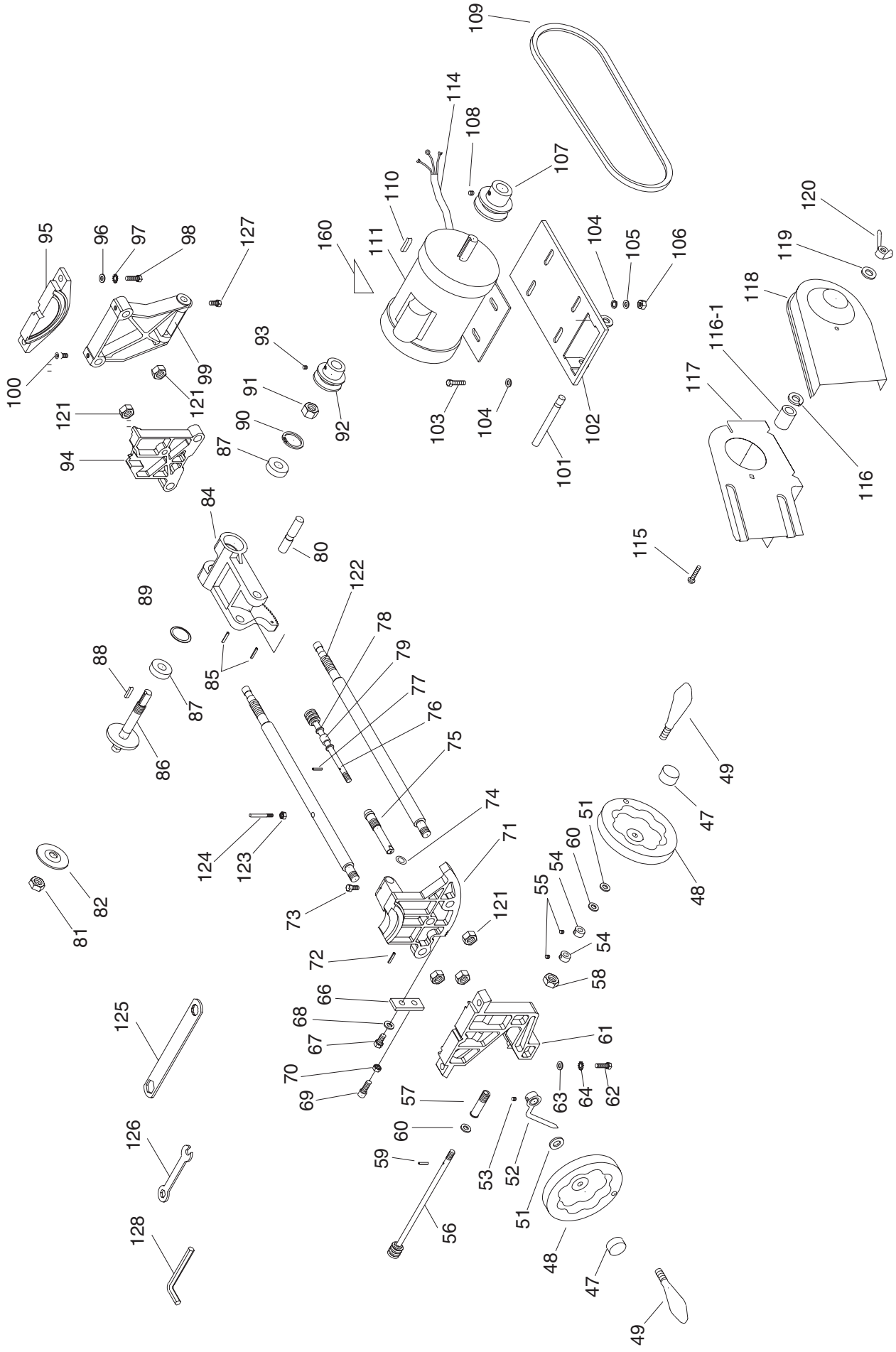
109
114
108
107
110
111
160
95
96
97
98
127
100
99
121
121
94
93
91
90
87
92
104
105
106
103
104
102
101
120
119
118
116-1
117
116
115
84
80
89
122
78
79
77
76
75
88
87
85
86
49
47
48
51
60
54
55
54
58
74
71
124
123
73
82
81
121
72
66
68
67
70
69
125
61
63
64
62
57
60
59
53
52
51
56
126
128
48
47
49

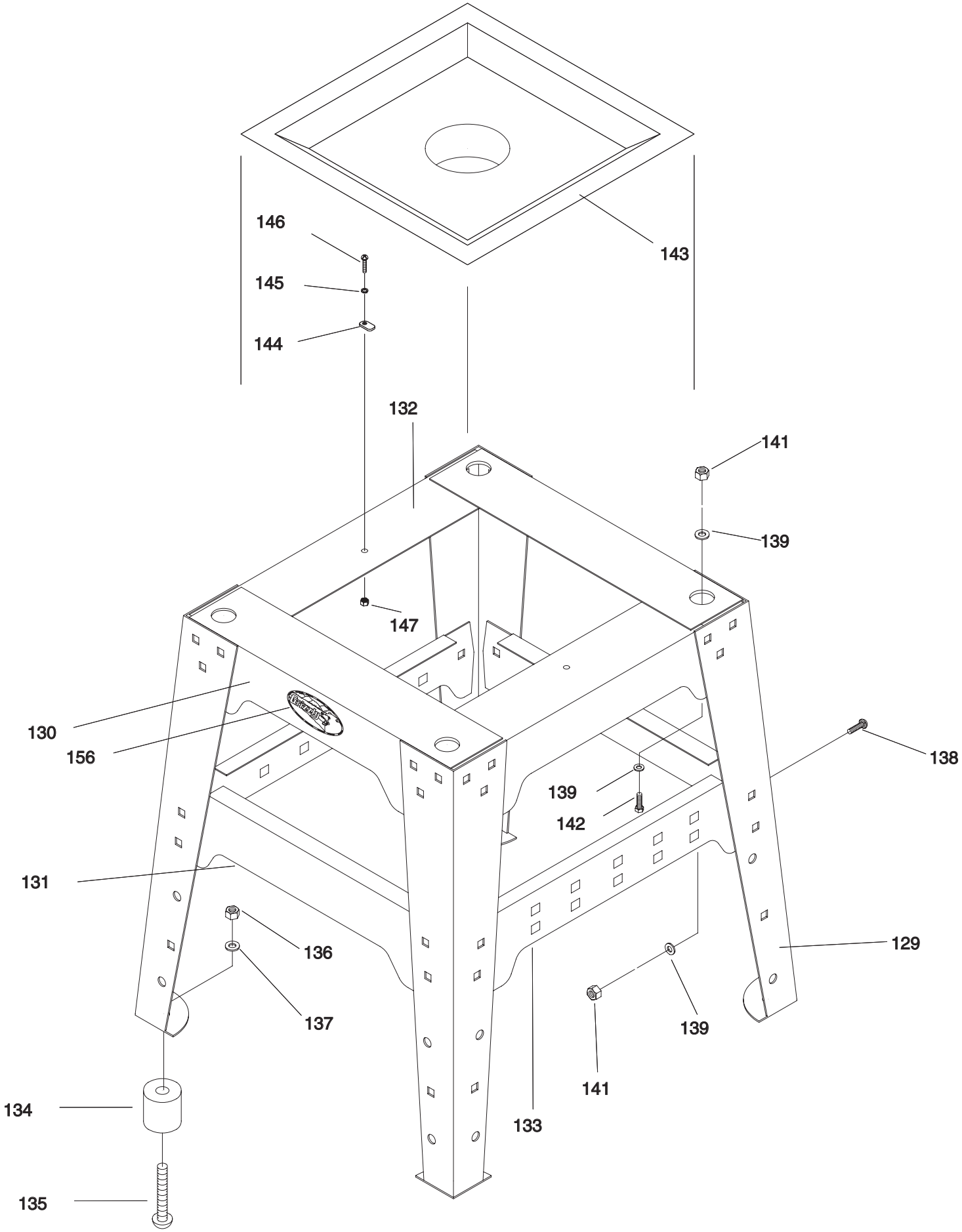
146
145
144
143
132
141
139
147
130
156
138
139
142
131
136
137
129
139
141
134
133
135

REF	PART #	DESCRIPTION
1A	P0444001A	DADO TABLE INSERT
1	P0444001	TABLE INSERT
2	P0444002	BUMPER
3	PSS04	SETSCREW 1/4-20 X 5/16"
4	P0444004	TABLE
5	P0444005	CABINET
6	PW07	FLAT WASHER 5/16"
7	PB32	HEX BOLT 5/16-18 X 5/8"
8	P0444008	SCALE
9	P0444009	EXTENSION WING - SHEET
9	P0444Z009	EXTENSION WING - CAST IRON
10	PLW05	LOCK WASHER 7/16"
11	PB90	HEX BOLT 7/16-14 X 1 1/4"
12	P0444012	BEARING BRACKET
13	PS35	PHLP HD SCR 5/16-18 X 3/4"
14	PW07	FLAT WASHER 5/16"
15	PN02	HEX NUT 5/16-18
16	P0444016	BLADE GUARD
17	PRP68M	ROLL PIN 6 X 48
18	P0444018	SPEED NUT
19	P0444019	SUPPORTING ARM
21	P0444021	PIN 6 X 30
22	P0444022	SPLITTER
22A	P0444022A	MOUNT
23	P0444023	ANTI-KICKBACK
24	P0444024	ANTI-KICKBACK SPRING
25	P0444025	ROLL PIN 8 X 20
26	P0444026	BRACKET
27	P0444027	BRACKET
28	PB12	HEX BOLT 5/16-18 X 1 1/4"
29	PLW01	LOCK WASHER 5/16"
30	P0444030	GUARD SUPPORT SHAFT
31	PW07	FLAT WASHER 5/16"
32	P0444032	HAND KNOB
33	PN14	HEX NUT 8-32
34	PS21	PHLP HD SCR 8-32 X 3/4"
35	P0444035	MITER GAUGE BODY
36	PFH09	FLAT HD SCR 1/4-20 X 5/16"
37	P0444037	SLIDING BLOCK
38	P0444038	MITER BAR
38A	PSS34	SETSCREW 10-24 X 5/8"
39	P0444039	STOP LINK
40	P0444040	POINTER
41	PRP14M	ROLL PIN 3 X 6
41A	PSS11	SETSCREW 1/4-20 X 1/4"
42	P0444042	SWITCH BOX WITH 2 BUTTONS
42-1	P0444042-1	SWITCH
43	PS10	PHLP HD SCR 10-24 X 1 1/2"
44	P0444044	SWITCH BOX
45	P0444045	SWITCH FIXING PLATE
46	PN07	HEX NUT 10-24
47	P0444047	HANDWHEEL KNOB

REF	PART #	DESCRIPTION
48	P0444048	HANDWHEEL
49	P0444049	HANDWHEEL HANDLE
51	PW02	FLAT WASHER 3/8"
52	P0444052	POINTER
53	PSS11	SETSCREW 1/4-20 X 1/4"
54	P0444054	SET COLLAR
55	PSS11	SETSCREW 1/4-20 X 1/4"
56	P0444056	TILT SHAFT
57	P0444057	ECCENTRIC
58	P0444058	HEX NUT 9/16-20
59	P0444059	ROLL PIN 3.5 X 20
60	P0444060	FIBER WASHER
61	P0444061	FRONT BRACKET
62	PB12	HEX BOLT 5/16-18 X 1 1/4"
63	PW07	FLAT WASHER 5/16"
64	PLW01	LOCK WASHER 5/16"
66	P0444066	STOP BLOCK
67	PB05	HEX BOLT 1/4-20 X 3/4"
68	PW06	FLAT WASHER 1/4"
69	PSS16	SETSCREW 1/4-20 X 1 1/2"
70	PN05	HEX NUT 1/4-20
71	P0444071	FRONT TRUNNION
72	PRP49M	ROLL PIN 5 X 25
73	PB32	HEX BOLT 5/16-18 X 5/8"
74	P0444074	WAVE WASHER
75	P0444075	ECCENTRIC
76	P0444076	ELEVATING SHAFT
77	P0444077	ROLL PIN 3.5 X 20
78	P0444078	FIBER WASHER
79	P0444079	SPACER
80	P0444080	ARBOR BRACKET SHAFT
81	P0444081	ARBOR NUT
82	P0444082	FLANGE
83	P0444083	BLADE OPTIONAL
84	P0444084	ARBOR BRACKET
85	PRP49M	ROLL PIN 5 X 25
86	P0444086	ARBOR
87	P6203	BALL BEARING 6203ZZ
88	PK23M	KEY 5 X 5 X 25
89	P0444089	LOADING SPRING
90	PR23M	INT RETAINING RING 40MM
91	P0444091	JAM NUT 5/8-24
92	P0444092	ARBOR PULLEY
93	PSS05	SETSCREW 5/16-18 X 1/4"
94	P0444094	REAR TRUNNION
95	P0444095	REAR TRUNNION BRACKET
96	PW07	FLAT WASHER 5/16"
97	PLW01	LOCK WASHER 5/16"
98	PB03	HEX BOLT 5/16-18 X 1
99	P0444099	MOTOR BRACKET
100	PSS17	SETSCREW 5/16-18 X 5/16"
101	P0444101	MOTOR PLATE ROD

REF	PART #	DESCRIPTION
102	P0444102	MOTOR PLATE
103	PB03	HEX BOLT 5/16-18 X 1
104	PW07	FLAT WASHER 5/16"
105	PLW01	LOCK WASHER 5/16"
106	PN02	HEX NUT 5/16-18
107	P0444107	MOTOR PULLEY
108	PSS11	SETSCREW 1/4-20 X 1/4"
109	P0444109	V-BELT 3VX-470
110	PK23M	KEY 5 X 5 X 25
111	P0444111	MOTOR 1.5 HP (G0444)
111	P0444Z111	MOTOR 2 HP (G0444Z)
112	PWRCRD110L	CORD 110V, LONG W/PLUG
112	PWRCRD220L	CORD 220V, LONG W/PLUG
113	P0444113	NYLON CLAMP
114	PWRCRD110S	POWER CORD 110V, SHORT
114	PWRCRD220S	POWER CORD 220V, SHORT
115	PCB09	CARRIAGE BOLT 5/16-18 X 1 3/4"
116	PEC07M	E-CLIP 7MM
116-1	P0444116-1	SPACER
117	P0444117	GUARD PLATE
118	P0444118	GUARD COVER
119	P0444119	FIBER WASHER 5/16"
120	PWN03	WING NUT 5/16-18
121	PN09	HEX NUT 5/8-18
122	P0444122	TIE-ROD
123	PN08	HEX NUT 3/8-16
124	P0444124	ADJUSTABLE STOP 3/8-16 X 2
125	PWR23	23MM WRENCH
126	PWR1213	12MM X 13MM WRENCH
127	PB05	HEX BOLT 1/4-20 X 3/4"
128	PAW02M	ALLEN WRENCH 2MM
128B	PAW04M	ALLEN WRENCH 4MM

REF	PART #	DESCRIPTION
128A	PAW03M	ALLEN WRENCH 3MM
129	P0444129	FOOT STAND
130	P0444130	TOP SHORT BRACKET
131	P0444131	BOTTOM SHORT BRACKET
132	P0444132	TOP LONG BRACKET
133	P0444133	BOTTOM LONG BRACKET
134	P0444134	RUBBER FEET
135	PS19	PHLP HD SCR 1/4-20 X 1
136	PN05	HEX NUT 1/4-20
137	PW06	FLAT WASHER 1/4"
138	PCB01	CARRIAGE BOLT 5/16-18 X 5/8"
139	PW07	FLAT WASHER 5/16"
141	PN02	HEX NUT 5/16-18
142	PB03	HEX BOLT 5/16-18 X 1
143	P0444143	DUST HOOD
144	P0444144	PLATE
145	PTLW01	EXT TOOTH WASHER #10
146	PS22	PHLP HD SCR 10-24 X 5/8"
147	PN07	HEX NUT 10-24
148	P0444148	CORD CLIP
149	PB05	HEX BOLT 1/4-20 X 3/4"
150	PW06	FLAT WASHER 1/4"
151	PW01	FLAT WASHER 1/2"
152	PN06	HEX NUT 1/2-12
153	P0444153	SAFETY GLASSES LABEL
154	P0444154	UNPLUG WARNING LABEL
155	P0444155	WARNING LABEL
156	P0444156	GRIZZLY CAST LOGO
157	P0444157	READ MANUAL LABEL
160	P0444160	ELECTRICITY LABEL
161	P0444161	BLADE GUARD LABEL
162	P0444162	MACHINE ID LABEL (G0444)
162	P0444Z162	MACHINE ID LABEL (G0444Z)
163	PB96	HEX BOLT 10-24 X 5/8