# SECTION 9: PARTS

## G0514X Main

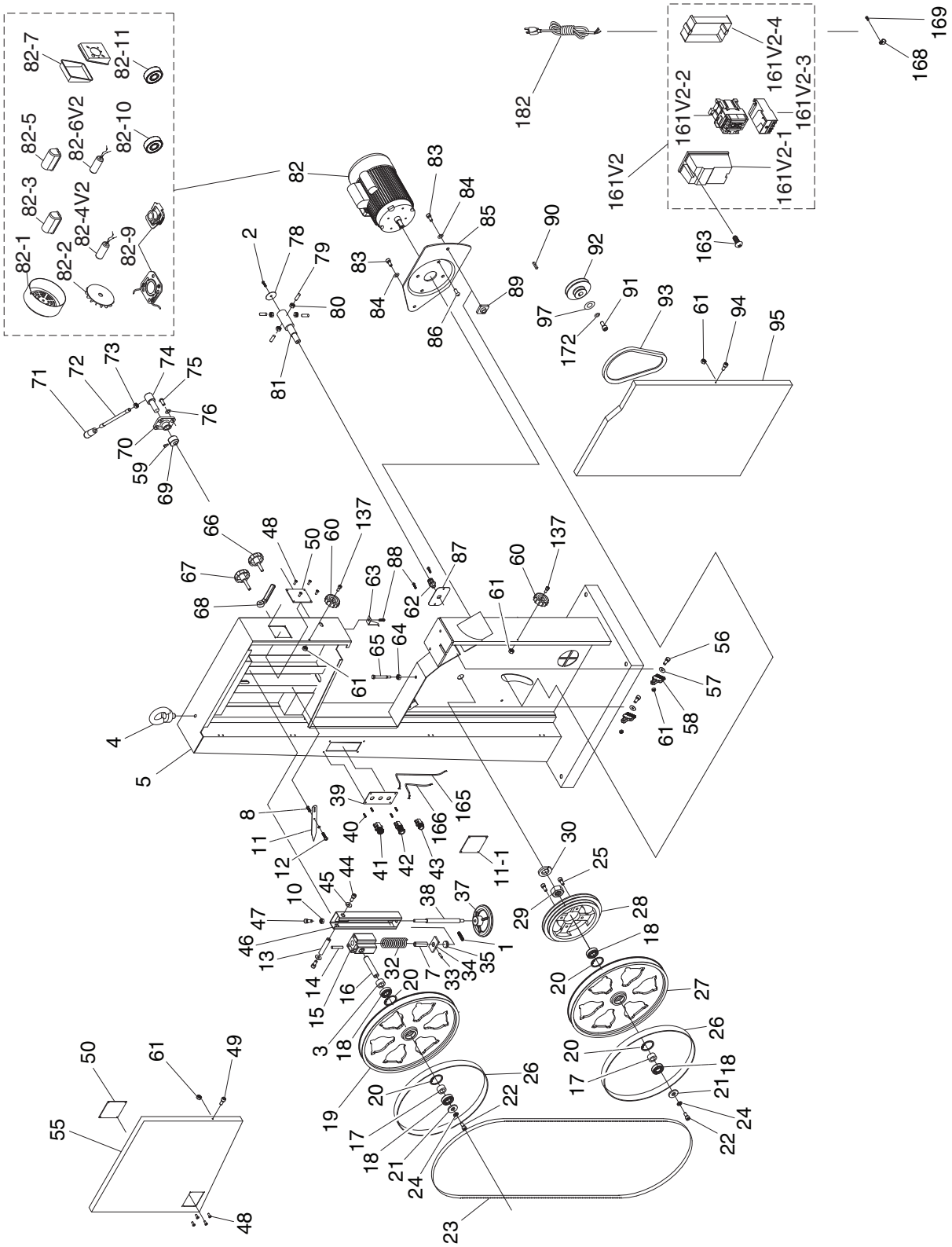

# G0514X Main Parts List

| REF | PART # | DESCRIPTION |
|---|---|---|
| 1 | P0514X001 | SET SCREW M6-1 X 10 |
| 2 | P0514X002 | FLANGE SCREW M5-.8 X 10 |
| 3 | P0514X003 | BUSHING |
| 4 | P0514X004 | LIFTING EYE BOLT M10-1.5 |
| 5 | P0514X005 | MACHINE BODY |
| 7 | P0514X007 | BUSHING |
| 8 | P0514X008 | FLAT WASHER 6MM |
| 10 | P0514X010 | HEX NUT M6-1 |
| 11 | P0514X011 | POINTER |
| 11-1 | P0514X011-1 | TENSION SCALE LABEL |
| 12 | P0514X012 | SHOULDER SCREW M4-.7 X 5 |
| 13 | P0514X013 | UPPER SHAFT |
| 14 | P0514X014 | ROLL PIN 5 X 36 |
| 15 | P0514X015 | UPPER WHEEL SHAFT HINGE |
| 16 | P0514X016 | UPPER WHEEL SHAFT |
| 17 | P0514X017 | BUSHING |
| 18 | P0514X018 | BALL BEARING 6204 2RS |
| 19 | P0514X019 | UPPER WHEEL 19" |
| 20 | P0514X020 | INT RETAINING RING 47MM |
| 21 | P0514X021 | WHEEL FLAT WASHER 8MM |
| 22 | P0514X022 | CAP SCREW M8-1.25 X 16 |
| 23 | P0514X023 | BLADE 6TPI HOOK 143" |
| 24 | P0514X024 | LOCK WASHER 8MM |
| 25 | P0514X025 | CAP SCREW M8-1.25 X 20 |
| 26 | P0514X026 | URETHANE TIRE PAIR |
| 27 | P0514X027 | LOWER WHEEL 19" |
| 28 | P0514X028 | IDLER PULLEY |
| 29 | P0514X029 | HEX NUT 1-14 |
| 30 | P0514X030 | LOCK WASHER 1" |
| 32 | P0514X032 | COMPRESSION SPRING |
| 33 | P0514X033 | ROLL PIN 3 X 16 |
| 34 | P0514X034 | LOCATE BLOCK |
| 35 | P0514X035 | THRUST BEARING 51201 |
| 37 | P0514X037 | HANDWHEEL |
| 38 | P0514X038 | ADJUSTING BOLT |
| 39 | P0514X039 | CONTROL PANEL PLATE |
| 40 | P0514X040 | TAP SCREW M4 X 10 |
| 41 | P0514X041 | KEYED POWER SWITCH |
| 42 | P0514X042 | ON BUTTON |
| 43 | P0514X043 | OFF BUTTON |
| 44 | P0514X044 | CAP SCREW M8-1.25 X 16 |
| 45 | P0514X045 | FENDER WASHER 8MM |
| 46 | P0514X046 | UPPER WHEEL SLIDING BRACKET |
| 47 | P0514X047 | CAP SCREW M8-1.25 X 90 |
| 48 | P0514X048 | STEEL BLIND RIVET 3 X 10MM |
| 49 | P0514X049 | CAP SCREW M6-1 X 10 |
| 50 | P0514X050 | CLEAR WINDOW |
| 55 | P0514X055 | UPPER WHEEL COVER |
| 56 | P0514X056 | CAP SCREW M6-1 X 25 |
| 57 | P0514X057 | FLAT WASHER 6MM |
| 58 | P0514X058 | BRUSH |
| 59 | P0514X059 | CAP SCREW M6-1 X 25 |
| 60 | P0514X060 | STAR HANDLE |
| 61 | P0514X061 | LOCK NUT 6MM |
| 62 | P0514X062 | STRAIN RELIEF 16MM |
| 63 | P0514X063 | HEIGHT POINTER |

| REF | PART # | DESCRIPTION |
|---|---|---|
| 64 | P0514X064 | HEX NUT M8-1.25 |
| 65 | P0514X065 | HEX BOLT M8-1.25 X 90 |
| 66 | P0514X066 | KNOB SCREW M10-1.5 X 20 |
| 67 | P0514X067 | KNOB SCREW M10-1.5 X 55 |
| 68 | P0514X068 | THREADED HANDLE 10MM |
| 69 | P0514X069 | CAM |
| 70 | P0514X070 | PILLOW BLOCK |
| 71 | P0514X071 | HANDLE M10-1.5 |
| 72 | P0514X072 | LEVER ROD |
| 73 | P0514X073 | HEX NUT M12-1.75 |
| 74 | P0514X074 | SHAFT |
| 75 | P0514X075 | BUTTON HD CAP SCR M8-1.25 X 20 |
| 76 | P0514X076 | LOCK WASHER 8MM |
| 78 | P0514X078 | COVER |
| 79 | P0514X079 | SET SCREW M8-1.25 X 20 |
| 80 | P0514X080 | HEX NUT M8-1.25 |
| 81 | P0514X081 | LOWER WHEEL SHAFT |
| 82 | P0514X082 | MOTOR 3HP 220V 1PH 60HZ |
| 82-1 | P0514X082-1 | MOTOR FAN COVER |
| 82-2 | P0514X082-2 | MOTOR FAN |
| 82-3 | P0514X082-3 | CAPACITOR COVER |
| 82-4V2 | P0514X082-4V2 | S CAPACITOR 300M 250V V2.05.11 |
| 82-5 | P0514X082-5 | CAPACITOR COVER |
| 82-6V2 | P0514X082-6V2 | R CAPACITOR 60M 300V V2.02.11 |
| 82-7 | P0514X082-7 | MOTOR JUNCTION BOX |
| 82-9 | P0514X082-9 | CENTRIFUGAL SWITCH W/ CONTACT PLATE |
| 82-10 | P0514X082-10 | FRONT MOTOR BEARING |
| 82-11 | P0514X082-11 | REAR MOTOR BEARING |
| 83 | P0514X083 | HEX BOLT M10-1.5 X 25 |
| 84 | P0514X084 | LOCK WASHER 10MM |
| 85 | P0514X085 | MOTOR BRACKET |
| 86 | P0514X086 | BUTTON HD CAP SCR M8-1.25 X 20 |
| 87 | P0514X087 | PLATE |
| 88 | P0514X088 | FLANGE SCREW M5-.8 X 10 |
| 89 | P0514X089 | PILLOW BLOCK |
| 90 | P0514X090 | KEY 5 X 5 X 35 |
| 91 | P0514X091 | HEX BOLT M8-1.25 X 20 LH |
| 92 | P0514X092 | MOTOR PULLEY |
| 93 | P0514X093 | V-BELT A-42 4L420 |
| 94 | P0514X094 | CAP SCREW M6-1 X 10 |
| 95 | P0514X095 | LOWER WHEEL COVER |
| 97 | P0514X097 | FENDER WASHER 8MM |
| 137 | P0514X137 | CAP SCREW M6-1 X 20 |
| 161V2 | P0514X161V2 | MAG SWITCH ASSY 3HP 220V V2.05.11 |
| 161V2-1 | P0514X161V2-1 | SWITCH FRONT COVER |
| 161V2-2 | P0514X161V2-2 | CONTACTOR SDE MA-18 220V |
| 161V2-3 | P0514X161V2-3 | OL RELAY SDE RA-20 12-18A |
| 161V2-4 | P0514X161V2-4 | SWITCH BACK COVER |
| 163 | P0514X163 | FLANGE SCREW M5-.8 X 10 |
| 165 | P0514X165 | CONTROL CORD 16G 3W |
| 166 | P0514X166 | MOTOR CORD 14G 3W |
| 168 | P0514X168 | CORD CLAMP |
| 169 | P0514X169 | FLANGE SCREW M5-.8 X 12 |
| 172 | P0514X172 | LOCK WASHER 8MM |
| 182 | P0514X182 | POWER CORD 14G 3W 6-15 |

# G0514X Fence/Guides

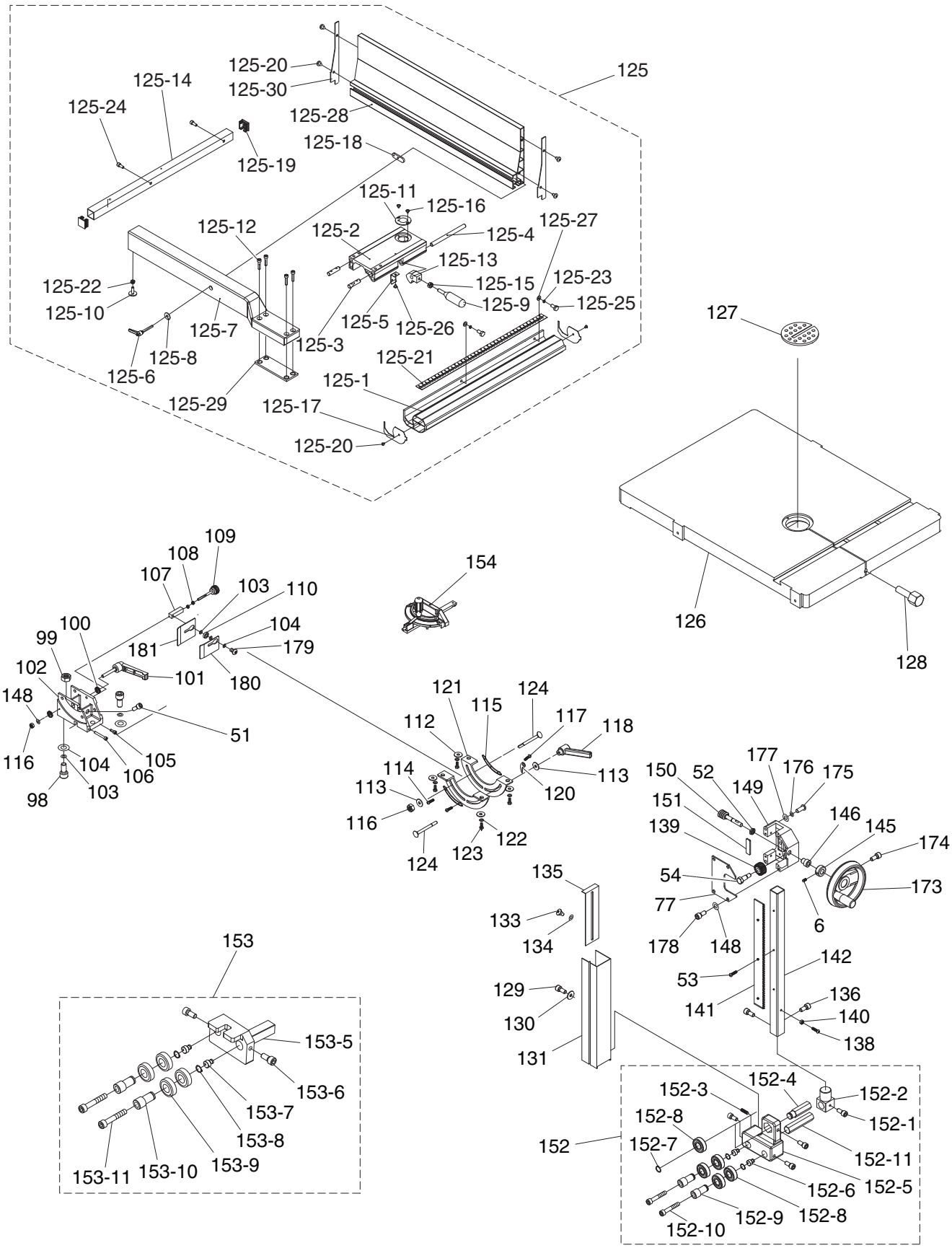

# G0514X Fence/Guide Parts List

| REF | PART # | DESCRIPTION |
|---|---|---|
| 6 | P0514X006 | SET SCREW M5-.8 X 5 |
| 51 | P0514X051 | CAP SCREW M6-1 X 20 |
| 52 | P0514X052 | WORM SHAFT THIN NUT |
| 53 | P0514X053 | FLAT HD SCR M4-.7 X 8 |
| 54 | P0514X054 | STEP BOLT M8-1.25 X 80 |
| 77 | P0514X077 | COVER |
| 98 | P0514X098 | CAP SCREW M10-1.5 X 35 |
| 99 | P0514X099 | HEX NUT M10-1.5 |
| 100 | P0514X100 | SMALL GEAR |
| 101 | P0514X101 | LOCK HANDLE |
| 102 | P0514X102 | TRUNNION SUPPORT BRACKET |
| 103 | P0514X103 | LOCK WASHER 10MM |
| 104 | P0514X104 | FLAT WASHER 10MM |
| 105 | P0514X105 | HEX BOLT M6-1 X 20 |
| 106 | P0514X106 | CAP SCREW M6-1 X 45 |
| 107 | P0514X107 | PILLOW BLOCK |
| 108 | P0514X108 | HEX NUT M6-1 |
| 109 | P0514X109 | ADJUST BOLT M6 |
| 110 | P0514X110 | BALL BEARING 6000ZZ |
| 112 | P0514X112 | FLAT WASHER 8MM |
| 113 | P0514X113 | FLAT WASHER 8MM |
| 114 | P0514X114 | PHLP HD SCR M4-.7 X 6 |
| 115 | P0514X115 | GEAR PLATE |
| 116 | P0514X116 | LOCK NUT M8-1.25 |
| 117 | P0514X117 | PHLP HD SCR M4-.7 X 6 |
| 118 | P0514X118 | LOCK HANDLE |
| 120 | P0514X120 | POINTER |
| 121 | P0514X121 | TRUNNION |
| 122 | P0514X122 | LOCK WASHER 8MM |
| 123 | P0514X123 | HEX BOLT M8-1.25 X 16 |
| 124 | P0514X124 | CARRIAGE BOLT M8-1.25 X 80 |
| 125 | P0514X125 | FENCE ASSEMBLY |
| 125-1 | P0514X125-1 | FIXED BASE 710MM |
| 125-2 | P0514X125-2 | ADJUST BASE |
| 125-3 | P0514X125-3 | FIXED SHAFT |
| 125-4 | P0514X125-4 | SHAFT |
| 125-5 | P0514X125-5 | SPRING PIECE |
| 125-6 | P0514X125-6 | ADJUSTMENT HANDLE M8 X 44 |
| 125-7 | P0514X125-7 | SUPPORT TUBE 640MM |
| 125-8 | P0514X125-8 | FLAT WASHER 8MM |
| 125-9 | P0514X125-9 | FENCE HANDLE M8-1.25 X 22 |
| 125-10 | P0514X125-10 | RAIL PAD ADJUSTMENT SCREW |
| 125-11 | P0514X125-11 | CONVEX |
| 125-12 | P0514X125-12 | CAP SCREW M6-1 X 25 |
| 125-13 | P0514X125-13 | FIXED LUMP |
| 125-14 | P0514X125-14 | REAR RAIL 710MM |
| 125-15 | P0514X125-15 | HEX NUT M8-1.25 |
| 125-16 | P0514X125-16 | FLANGE SCREW M4-.7 X 6 |
| 125-17 | P0514X125-17 | GUARD PIECE |
| 125-18 | P0514X125-18 | MOVING PLATE |
| 125-19 | P0514X125-19 | PLUGGED |
| 125-20 | P0514X125-20 | TAP SCREW M3.5 X 8 |
| 125-21 | P0514X125-21 | SCALE |
| 125-22 | P0514X125-22 | HEX NUT M6-1 |
| 125-23 | P0514X125-23 | LOCK WASHER 6MM |
| 125-24 | P0514X125-24 | CAP SCREW M6-1 X 16 |
| 125-25 | P0514X125-25 | HEX BOLT M6-1 X 20 |
| 125-26 | P0514X125-26 | FLANGE BOLT M4-.7 X 8 |
| 125-27 | P0514X125-27 | FLAT WASHER 6MM |
| 125-28 | P0514X125-28 | RESAW FENCE AL 640MM |
| 125-29 | P0514X125-29 | SPACER PLATE |
| 125-30 | P0514X125-30 | RESAW FENCE END PLATE |
| 126 | P0514X126 | TABLE 26-3/4" X 19" |
| 127 | P0514X127 | TABLE INSERT |
| 128 | P0514X128 | TABLE PIN |
| 129 | P0514X129 | CAP SCREW M5-.8 X 10 |
| 130 | P0514X130 | FLAT WASHER 5MM |
| 131 | P0514X131 | GUIDE POST COVER |
| 133 | P0514X133 | SHOULDER SCREW |
| 134 | P0514X134 | FIBER WASHER 13MM |
| 135 | P0514X135 | SLIDING PLATE |
| 136 | P0514X136 | CAP SCREW M6-1 X 16 |
| 138 | P0514X138 | PHLP HD SCR M4-.7 X 10 |
| 139 | P0514X139 | GEAR |
| 140 | P0514X140 | HEX NUT M4-.7 |
| 141 | P0514X141 | RACK |
| 142 | P0514X142 | UPPER GUIDE TUBE |
| 145 | P0514X145 | LOCK COLLAR |
| 146 | P0514X146 | BUSHING |
| 148 | P0514X148 | LOCK WASHER 8MM |
| 149 | P0514X149 | GUIDE BRACKET |
| 150 | P0514X150 | WORM CYLINDER |
| 151 | P0514X151 | FIXED PLATE |
| 152 | P0514X152 | UPPER BLADE GUIDE ASSEMBLY |
| 152-1 | P0514X152-1 | CAP SCREW M6-1 X 16 |
| 152-2 | P0514X152-2 | UPPER GUIDE SUPPORT BLOCK |
| 152-3 | P0514X152-3 | SET SCREW M6-1 X 10 |
| 152-4 | P0514X152-4 | ADJUST BAR |
| 152-5 | P0514X152-5 | UPPER BLADE GUIDE SUPPORT |
| 152-6 | P0514X152-6 | BIAS SHAFT |
| 152-7 | P0514X152-7 | EXT RETAINING RING 15MM |
| 152-8 | P0514X152-8 | BALL BEARING 6202 ZZ |
| 152-9 | P0514X152-9 | HANDLE BUSHING |
| 152-10 | P0514X152-10 | CAP SCREW M6-1 X 35 |
| 152-11 | P0514X152-11 | UPPER SPACING SLEEVE |
| 153 | P0514X153 | LOWER BLADE GUIDE ASSEMBLY |
| 153-5 | P0514X153-5 | LOWER BLADE GUIDE SUPPORT |
| 153-6 | P0514X153-6 | CAP SCREW M6-1 X 16 |
| 153-7 | P0514X153-7 | BIAS SHAFT |
| 153-8 | P0514X153-8 | EXT RETAINING RING 15MM |
| 153-9 | P0514X153-9 | BALL BEARING 6202 ZZ |
| 153-10 | P0514X153-10 | HANDLE BUSHING |
| 153-11 | P0514X153-11 | CAP SCREW M6-1 X 35 |
| 154 | P0514X154 | MITER GAUGE ASSEMBLY |
| 173 | P0514X173 | GUIDE POST HANDWHEEL |
| 174 | P0514X174 | CAP SCREW M6-1 X 20 |
| 175 | P0514X175 | BUTTON HD CAP SCR M8-1.25 X 20 |
| 176 | P0514X176 | LOCK WASHER 8MM |
| 177 | P0514X177 | FLAT WASHER 8MM |
| 178 | P0514X178 | CAP SCREW M8-1.25 X 16 |
| 179 | P0514X179 | BUTTON HD CAP SCR M10-1.5 X 20 |
| 180 | P0514X180 | RIGHT CLAMP PLATE |
| 181 | P0514X181 | LEFT CLAMP PLATE |

# G0514X Labels & Parts List

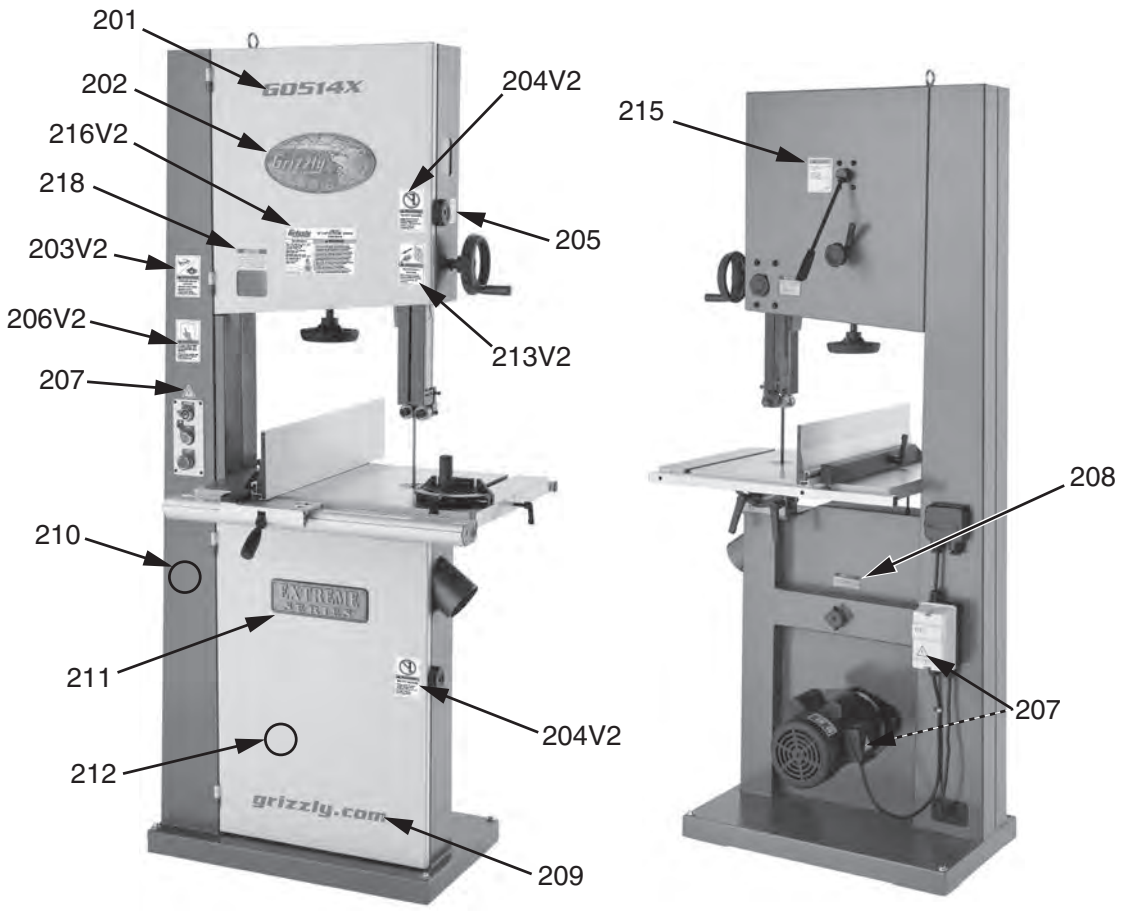


| REF | PART # | DESCRIPTION |
|---|---|---|
| 201 | P0514X201 | MODEL NUMBER LABEL |
| 202 | P0514X202 | GRIZZLY LOGO PLATE |
| 203V2 | P0514X203V2 | GLASSES/RESPIRATOR LABEL V2.08.13 |
| 204V2 | P0514X204V2 | OPEN DOOR LABEL V2.08.13 |
| 205 | P0514X205 | GUARD ADJ LABEL |
| 206V2 | P0514X206V2 | READ MANUAL LABEL V2.08.13 |
| 207 | P0514X207 | ELECTRICITY LABEL |
| 208 | P0514X208 | TABLE LOCK LEVER LABEL |

| REF | PART # | DESCRIPTION |
|---|---|---|
| 209 | P0514X209 | GRIZZLY.COM LABEL |
| 210 | P0514X210 | TOUCH-UP PAINT, GRIZZLY GREEN |
| 211 | P0514X211 | EXTREME SERIES NAMEPLATE |
| 212 | P0514X212 | TOUCH-UP PAINT, PUTTY |
| 213V2 | P0514X213V2 | DISCONNECT POWER LABEL V2.08.13 |
| 215 | P0514X215 | TENSION ADJ LABEL |
| 216V2 | P0514X216V2 | MACHINE ID LABEL V2.02.12 |
| 218 | P0514X218 | BLADE TENSION LABEL |

## ⚠WARNING

**Safety labels warn about machine hazards and ways to prevent injury. The owner of this machine MUST maintain the original location and readability of the labels on the machine. If any label is removed or becomes unreadable, REPLACE that label before using the machine again. Contact Grizzly at (800) 523-4777 or www.grizzly.com to order new labels.**