Upper Front-Half

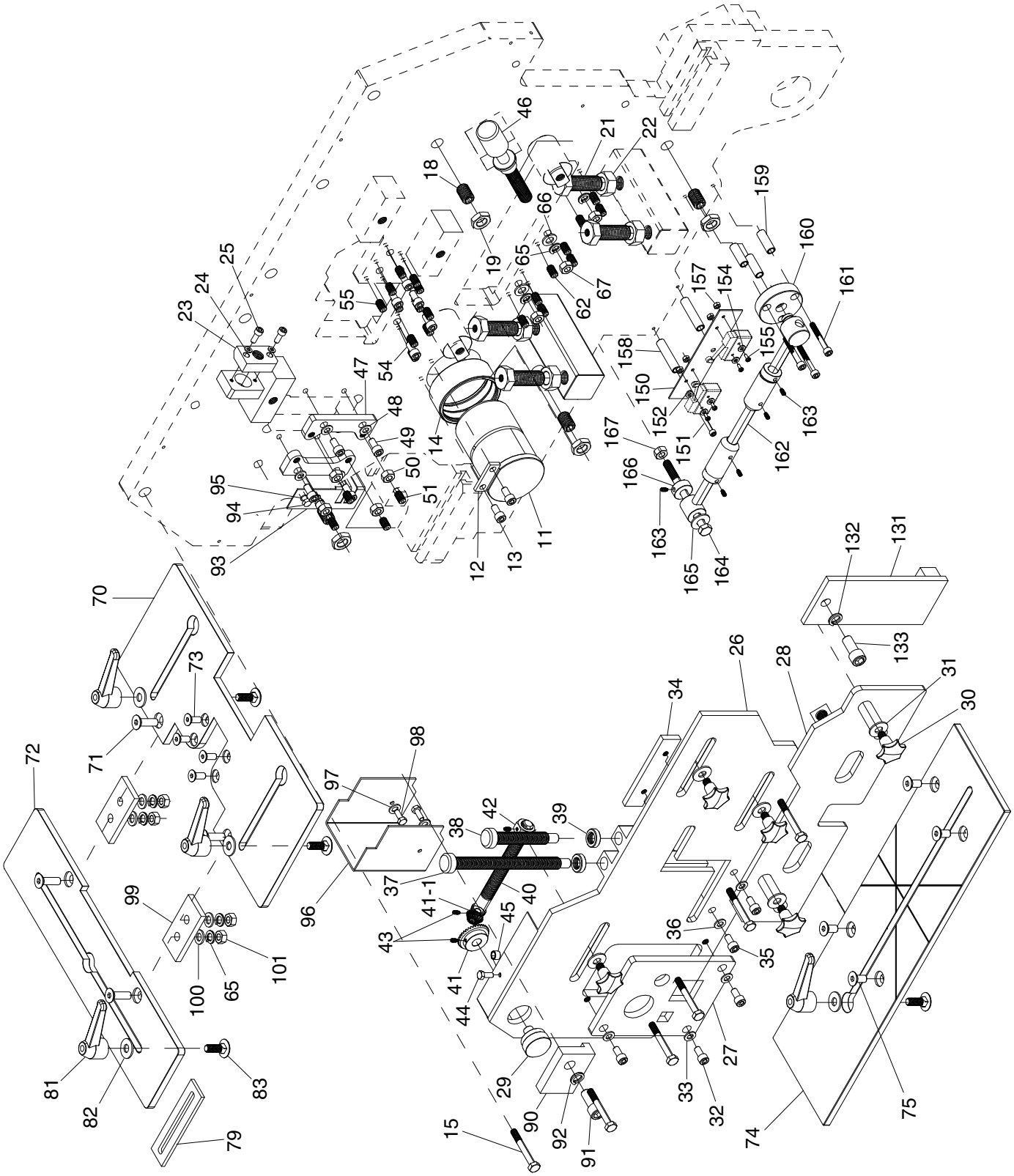

G0647 Upper Front-Half Parts List

REF	PART #	DESCRIPTION
11	P0647011	PIVOT SHAFT
12	P0647012	LOCK PLATE
13	PSB61M	CAP SCREW M10-1.5 X 20
14	P0647014	PIVOT SHAFT BUSHING
15	P0646015	HEX BOLT M20-2.5 X 140
18	P0646018	SET SCREW M24-3 X 50
19	PN44M	HEX NUT M24-3
21	P0646021	HEX BOLT M24-3 X 65
22	PN44M	HEX NUT M24-3
23	P0647023	LEAD SCREW NUT
24	PW03M	FLAT WASHER 6MM
25	PSB07M	CAP SCREW M6-1 X 30
26	P0647026	HOLD-DOWN UPPER
27	P0647027	SECTION FRAME
28	P0647028	HOLD-DOWN LOWER
29	P0647029	HANDWHEEL
30	P0646030	STAR KNOB M16-2 X 30
31	PW08M	FLAT WASHER 16MM
32	PSB36M	CAP SCREW M12-1.75 X 25
33	PW06M	FLAT WASHER 12MM
34	P0647034	SUPPORT PLATE
35	PSB61M	CAP SCREW M10-1.5 X 20
36	PW04M	FLAT WASHER 10MM
37	P0647037	ANGLE HOLD-DOWN BOLT LONG
38	P0647038	ANGLE HOLD-DOWN BOLT SHORT
39	P0647039	KNURLED LOCK RING
40	P0647040	UPPER HOLD-DOWN LEAD SCREW
41	P0647041	BEVEL GEAR LARGE
41-1	P0647041-1	BEVEL GEAR SMALL
42	P0647042	SPECIAL HEX NUT
43	PSS01M	SET SCREW M6-1 X 10
44	PB47M	HEX BOLT M6-1 X 40
45	P0647045	BUSHING
46	P0647046	LOWER HOLD-DOWN ADJUST ROD
47	P0647047	SECTION BLADE CLAMP
48	PLW05M	LOCK WASHER 12MM
49	PSB77M	CAP SCREW M12-1.75 X 30
50	PN09M	HEX NUT M12-1.75
51	PSS104M	SET SCREW M12-1.75 X 45
54	PSB111M	CAP SCREW M12-1.75 X 35
55	PSS10M	SET SCREW M10-1.5 X 20
62	PSS10M	SET SCREW M10-1.5 X 20
65	PLW05M	LOCK WASHER 12MM

REF	PART #	DESCRIPTION
66	PW06M	FLAT WASHER 12MM
67	PN09M	HEX NUT M12-1.75
70	P0647070	PUNCH TABLE
71	PFH61M	FLAT HD CAP SCR M12-1.75 X 35
72	P0647072	PUNCH TABLE EXTENSION
73	PFH62M	FLAT HD CAP SCR M12-1.75 X 20
74	P0647074	SHEAR TABLE
75	PFH63M	FLAT HD CAP SCR M12-1.75 X 25
79	P0647079	TABLE GUIDE
81	P0647081	LOCK HANDLE 1/2-13
82	PW01	FLAT WASHER 1/2
83	PCB32M	CARRIAGE BOLT 1/2-13 X 1-3/4
90	P0647090	MOUNTING BLOCK
91	PSB54M	CAP SCREW M16-2 X 40
92	PLW10M	LOCK WASHER 16MM
93	P0647093	PUNCH SIDE GUARD
94	PB04M	HEX BOLT M6-1 X 10
95	PW03M	FLAT WASHER 6MM
96	P0647096	PUNCH GUARD PLEXIGLASS
97	PW03M	FLAT WASHER 6MM
98	PB04M	HEX BOLT M6-1 X 10
99	P0647099	PUNCH TABLE CONNECTING PLATE
100	PW06M	FLAT WASHER 12MM
101	PN09M	HEX NUT M12-1.75
131	P0647131	NOTCH STRIPPER PLATE
132	PLW10M	LOCK WASHER 16MM
133	PSB166M	CAP SCREW M16-2 X 30
150	P0647150	MOUNTING PLATE
151	PSB167M	CAP SCREW M6-1 X 70
152	PW03M	FLAT WASHER 6MM
154	PW05M	FLAT WASHER 4MM
155	PS51M	PHLP HD SCR M4-.7 X 30
157	PN04M	HEX NUT M4-.7
158	P0647158	SPACER 6MM
159	P0647159	SPACER 8MM
160	P0647160	LIMIT STOP BRACKET
161	PSB60M	CAP SCREW M8-1.25 X 55
162	P0647162	LIMIT STOP ASSEMBLY
163	PSS16M	SET SCREW M8-1.25 X 10
164	P0646164	HEX BOLT M12-1.75 X 150
165	PW06M	FLAT WASHER 12MM
166	P0647166	LOCK COLLAR
167	PN09M	HEX NUT M12-1.75

Upper Rear-Half

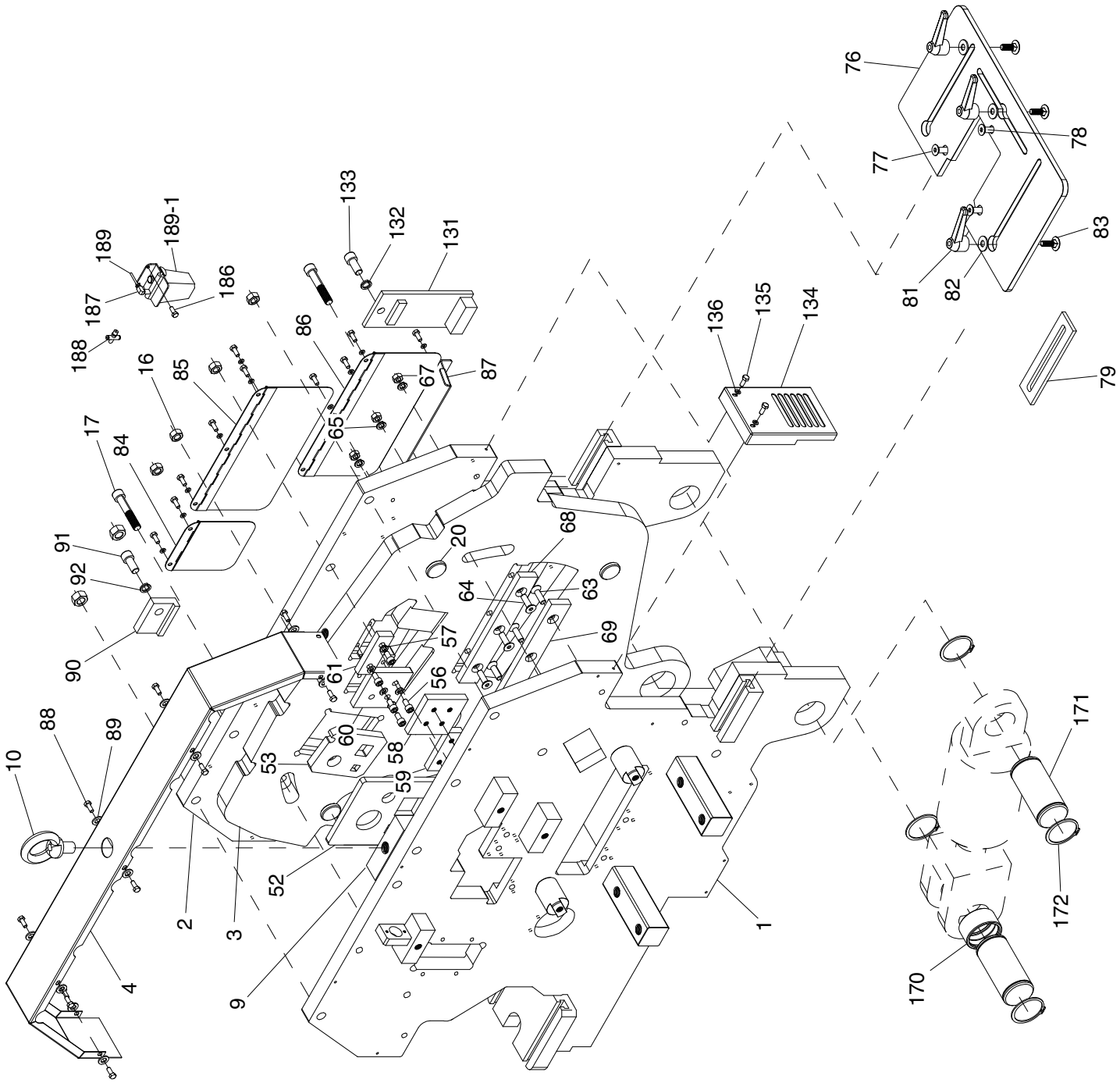

G0647 Upper Rear-Half Parts List

REF	PART #	DESCRIPTION
1	P0647001	TOP PANEL FRONT
2	P0647002	TOP PANEL REAR
3	P0647003	HANGER FRAME
4	P0647004	TOP COVER
9	P0647009	LIFTING EYE BOLT MOUNT
10	P0646010	LIFTING EYE BOLT
16	PN28M	HEX NUT M20-2.5
17	P0646017	HEX BOLT M20-2.5 X 125
20	P0647020	PRESSURE PAD
52	P0647052	SECTION BLADE ARM
53	P0647053	SECTION BLADE BODY
56	PSB92M	CAP SCREW M12-1.75 X 40
57	PLW05M	LOCK WASHER 12MM
58	P0647058	ANGLE BLADE BODY UPPER
59	P0647059	ANGLE BLADE BODY LOWER
60	P0647060	ANGLE BLADE ARM LOWER
61	P0647061	ANGLE BLADE ARM UPPER
63	PFH64M	FLAT HD CAP SCR M10-1.5 X 60
64	PFH65M	FLAT HD CAP SCR M10-1.5 X 55
65	PLW05M	LOCK WASHER 12MM
67	PN09M	HEX NUT M12-1.75
68	P0647068	SHEAR BLADE ARM
69	P0647069	SHEAR BLADE BODY
76	P0647076	NOTCH TABLE
77	PFH66M	FLAT HD CAP SCR M10-1.5 X 30
78	PFH67M	FLAT HD CAP SCR M8-1.25 X 25
79	P0647079	TABLE GUIDE

REF	PART #	DESCRIPTION
81	P0647081	LOCK HANDLE 1/2-13
82	PW01	FLAT WASHER 1/2
83	PCB32M	CARRIAGE BOLT 1/2-13 X 1-3/4
84	P0647084	SECTION REAR COVER
85	P0647085	ANGLE REAR COVER
86	P0647086	SHEAR REAR COVER
87	P0647087	SHEAR BOTTOM COVER
88	PB04M	HEX BOLT M6-1 X 10
89	PW03M	FLAT WASHER 6MM
90	P0647090	MOUNTING BLOCK
91	PSB54M	CAP SCREW M16-2 X 40
92	PLW10M	LOCK WASHER 16MM
131	P0647131	NOTCH SIDE PLATE
132	PLW10M	LOCK WASHER 16MM
133	PSB166M	CAP SCREW M16-2 X 30
134	P0647134	NOTCH END GUARD
135	PB04M	HEX BOLT M6-1 X 10
136	PW03M	FLAT WASHER 6MM
170	P0647170	BUSHING
171	P0647171	CYLINDER AXLE
172	P0647172	SPECIAL EXT RETAINING RING
186	PSB50M	CAP SCREW M5-.8 X 10
187	P0646187	OIL LINE ELBOW CONNECTOR 4MM
188	P0646188	OIL LINE 4-WAY CONNECTOR 4MM
189	P0646189	OIL LINE 4MM
189-1	P0646189-1	ONE-SHOT OILER

Cabinet

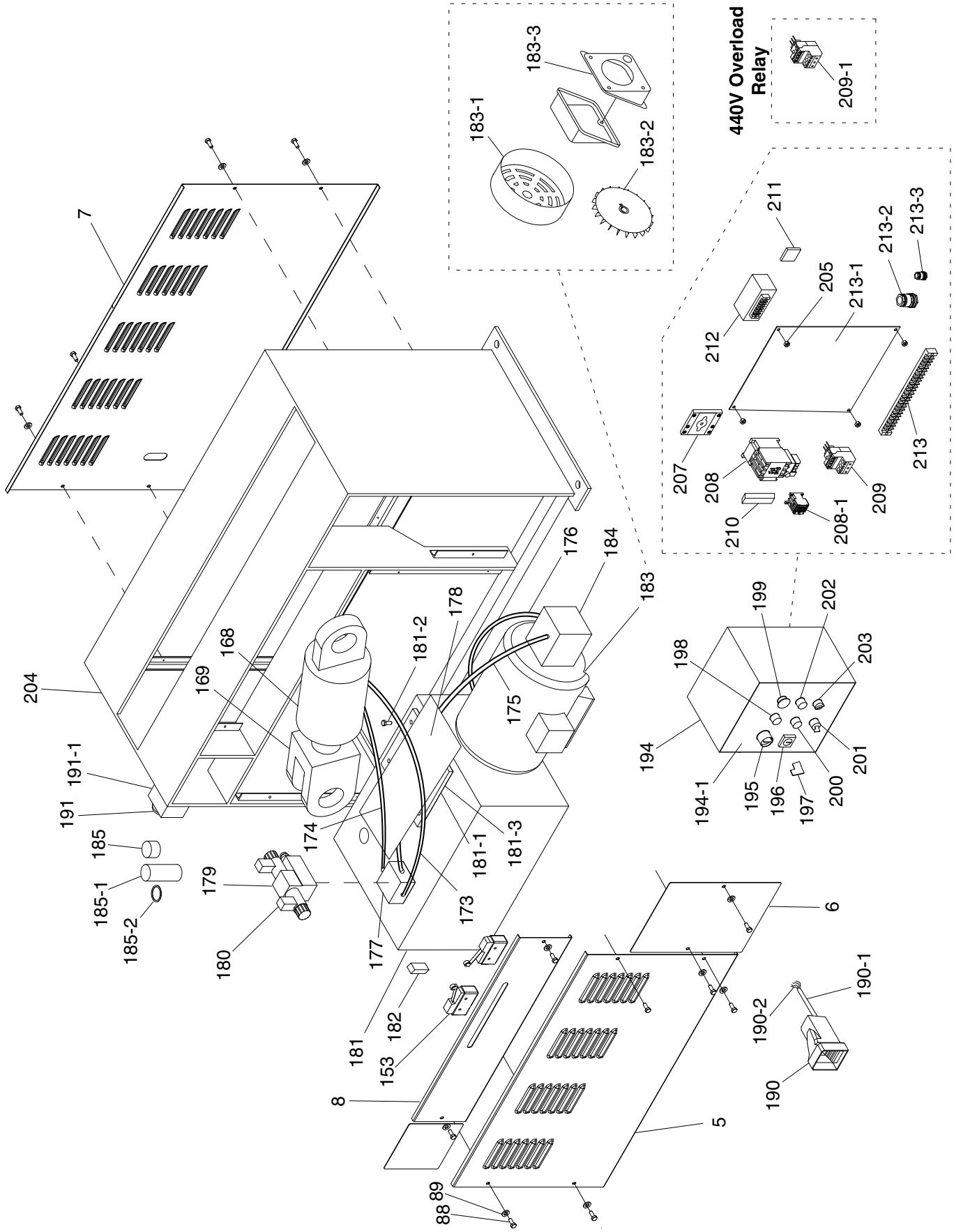
440V Overload Relay
209-1
183-3
183-1
183-2
211
213-2
213-3
205
213-1
212
213
207
208
209
210
208-1
7
176
184
183
178
181-2
168
169
204
175
199
202
198
203
194
201
191-1
191
194-1
195
196
197
200
185
174
181-1
181-3
185-1
179
173
6
185-2
180
177
190-1
182
190-2
181
153
190
8
5
89
88

G0647 Cabinet

REF	PART #	DESCRIPTION
5	P0647005	FRONT ACCESS PANEL
6	P0647006	SUB-PANEL
7	P0647007	REAR ACCESS PANEL
8	P0647008	LIMIT SWITCH ACCESS PANEL
88	PB04M	HEX BOLT M6-1 X 10
89	PW03M	FLAT WASHER 6MM
153	P0646153	RAM LIMIT SWITCH
168	P0647168	HYDRAULIC CYLINDER
169	P0647169	RAM
173	P0646173	HYD. LINE MANIFOLD-CYLINDER
174	P0646174	HYD. LINE MANIFOLD-CYLINDER
175	P0646175	HYD. LINE PUMP-MANIFOLD
176	P0646176	HYD. LINE TANK-PUMP
177	P0646177	HYDRAULIC MANIFOLD
178	P0646178	OIL CATCH PAN
179	P0646179	HYDRAULIC CONTROL VALVE ASSY
180	P0646180	HYDRAULIC VALVE SOLENOID
181	P0646181	HYDRAULIC RESERVOIR
181-1	P0646181-1	RESERVOIR ACCESS PANEL
181-2	PB04M	HEX BOLT M6-1 X 10
181-3	P0646181-3	RES. ACCESS PANEL GASKET
182	P0646182	OIL SIGHT GLASS & THERMOMETER
183	P0647183	MOTOR 5HP 220/440V 3-PH
183-1	P0647183-1	MOTOR FAN COVER
183-2	P0647183-2	MOTOR FAN
183-3	P0647183-3	MOTOR JUNCTION BOX
184	P0647184	HYDRAULIC PUMP
185	P0646185	FILLER CAP
185-1	P0646185-1	FILLER SCREEN
185-2	P0646185-2	FILLER CAP GASKET

REF	PART #	DESCRIPTION
190	P0646190	FOOT PEDAL
190-1	P0646190-1	FOOT PEDAL FLEXIBLE CONDUIT
190-2	P0646190-2	FOOT PEDAL ELECTRICAL CABLE
191	P0646191	SIDE EMERGENCY STOP BUTTON
191-1	P0646191-1	EMERGENCY STOP BUTTON BOX
194	P0646194	ELECTRICAL CABINET
194-1	P0646194-1	CABINET DOOR
195	P0646195	ROTARY SWITCH
196	P0646196	DOOR LOCK
197	P0646197	DOOR LOCK KEY PLASTIC
198	P0646198	POWER LAMP
199	P0646199	EMERGENCY STOP BUTTON
200	P0646200	MOTOR START BUTTON
201	P0646201	NORMAL/INCH SWITCH
202	P0646202	MOTOR STOP BUTTON
203	P0646203	PUNCH/NOTCH SWITCH
204	P0647204	BASE
205	PN01M	HEX NUT M6-1
207	P0646207	MAIN POWER SWITCH
208	P0646208	CONTACTOR TECO 16-N 220/440V
208-1	P0646208-1	CONTACTOR TECO CNA-2 220/440V
209	P0646209	OL RELAY TECO RHN-10K 12.5-18
209-1	P0646209-1	OL RELAY TECO RHN10K 7-11
210	P0646210	FUSE ASSEMBLY 5A
211	P0646211	ELECTRICAL COMMUTATOR
212	P0646212	TRANSFORMER
213	P0646213	TERMINAL BLOCK
213-1	P0646213-1	ELECTRICAL PANEL
213-2	P0646213-2	STRAIN RELIEF LARGE
213-3	P0646213-3	STRAIN RELIEF SMALL

Notching Station

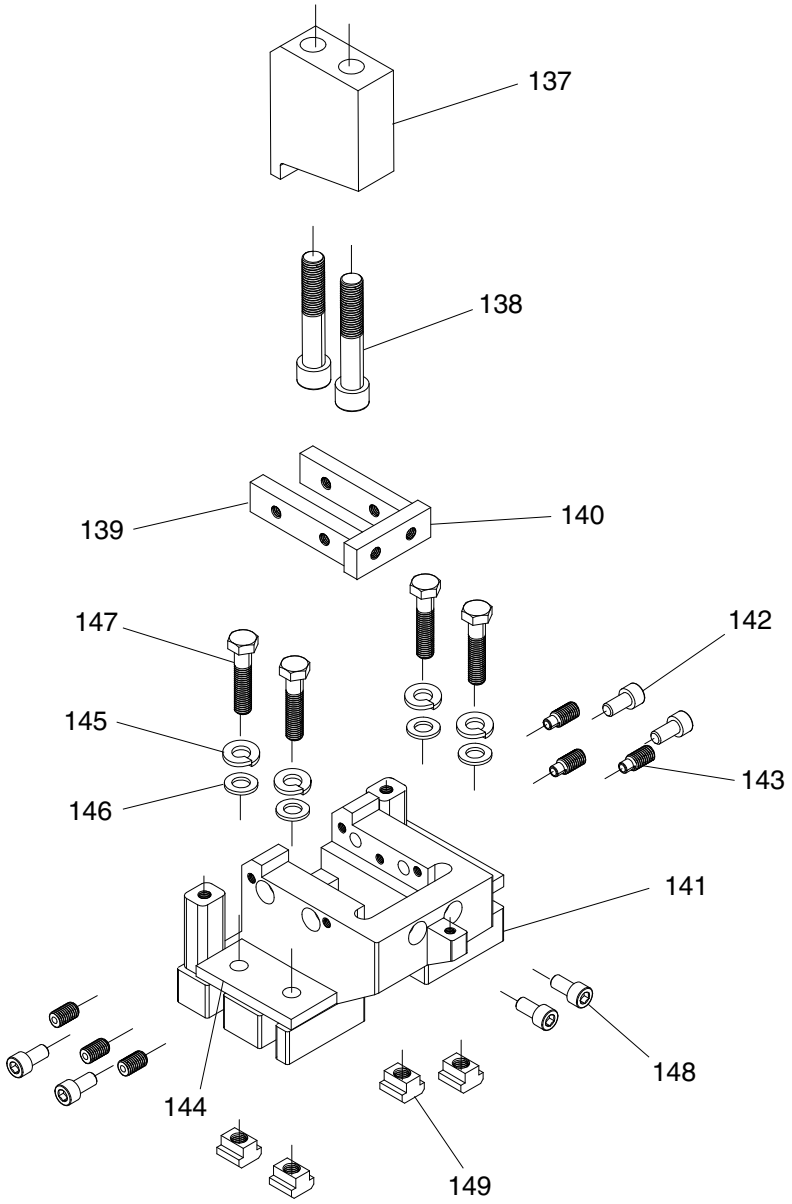

REF	PART #	DESCRIPTION
137	P0646137	NOTCH PUNCH
138	P0646138	CAP SCREW M20-2.5 X 90
139	P0646139	NOTCH SIDE DIE
140	P0646140	NOTCH END DIE
141	P0646141	NOTCH BOLSTER
142	PSB64M	CAP SCREW M10-1.5 X 25
143	PSS21M	SET SCREW M8-1.25 X 25

REF	PART #	DESCRIPTION
144	P0646144	NOTCH BOLSTER CLAMP
145	PLW05M	LOCK WASHER 12MM
146	PW06M	FLAT WASHER 12MM
147	PB12M	HEX BOLT M12-1.75 X 55
148	PSB64M	CAP SCREW M10-1.5 X 25
149	P0646149	TEE NUT M12-1.75

Punching Station

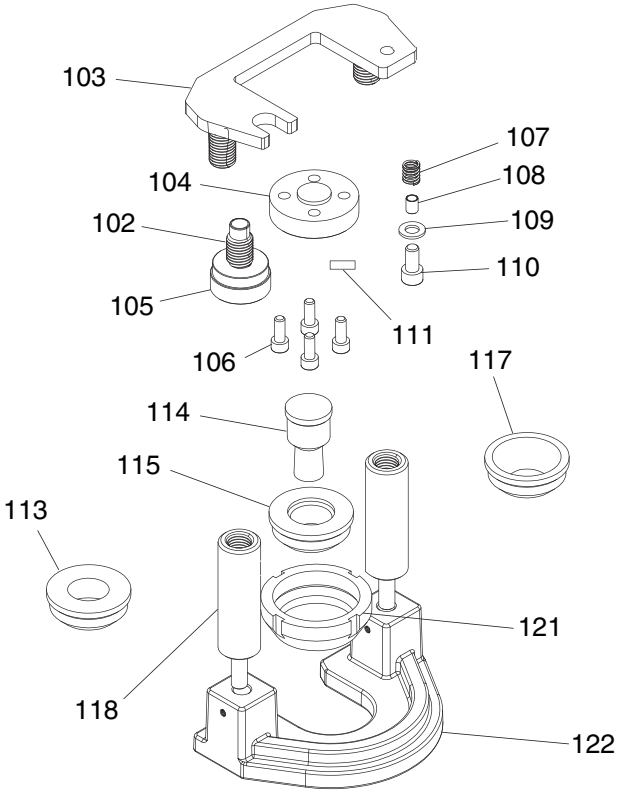

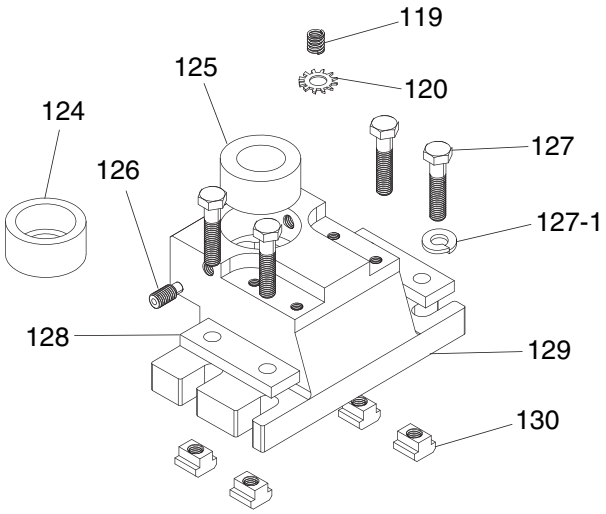

REF	PART #	DESCRIPTION
102	P0646102	SPECIAL SET SCREW
103	P0646103	PUNCH STRIPPER TOP PLATE
104	P0646104	PUNCH PRESSURE PLATE
105	P0646105	KNURLED KNOB
106	PSB31M	CAP SCREW M8-1.25 X 25
107	P0646107	COMPRESSION SPRING
108	P0646108	BUSHING
109	PW04M	FLAT WASHER 10MM
110	PSB47M	CAP SCREW M10-1.5 X 40
111	P0646111	PUNCH LOCATION KEY
113	P0646113	PUNCH ADAPTER 81031 3-19MM
114	P0646114	ROUND PUNCH 22MM
115	P0646115	ROUND PUNCH ADAPTER 5-29MM
117	P0646117	PUNCH ADAPTER 9036 13-38MM

REF	PART #	DESCRIPTION
118	P0646118	STRIPPER ADJUSTMENT SHAFT
119	P0646119	COMPRESSION SPRING
120	PTLW12M	EXT TOOTH WASHER 12MM
121	P0646121	PUNCH RETAINING RING
122	P0646122	PUNCH STRIPPER BASE
124	P0646124	ROUND DIE SHOE
125	P0646125	ROUND DIE 5-29MM
126	PSS106M	SET SCREW M12-1.75 X 55
127	PB12M	HEX BOLT M12-1.75 X 55
127-1	PLW05M	LOCK WASHER 12MM
128	P0646128	PUNCH BOLSTER CLAMP
129	P0646129	PUNCH BOLSTER
130	P0646130	TEE NUT M12-1.75

Extension Bar & Tools

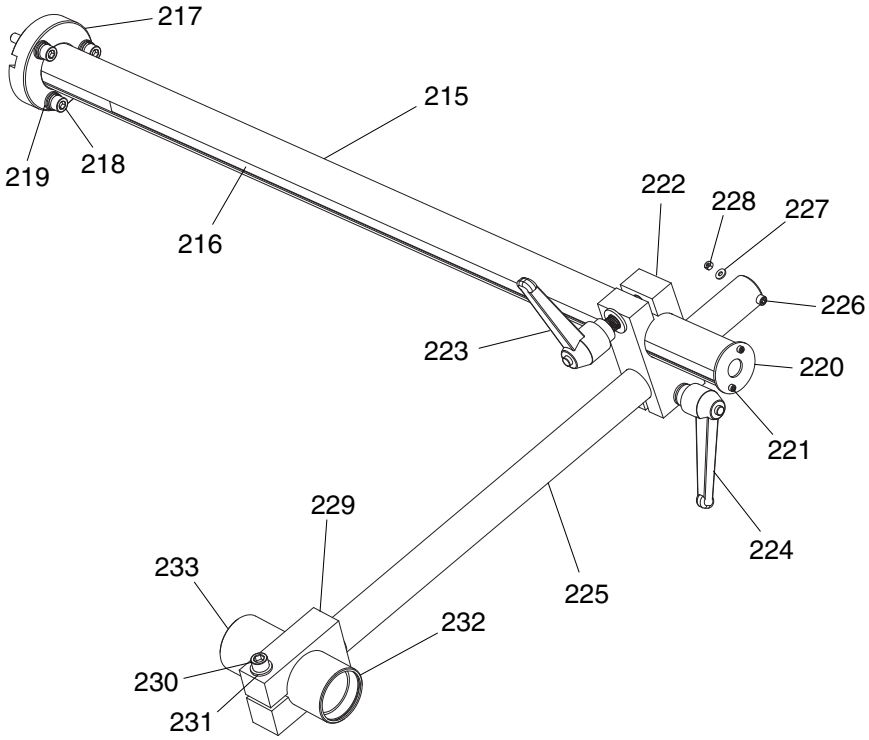

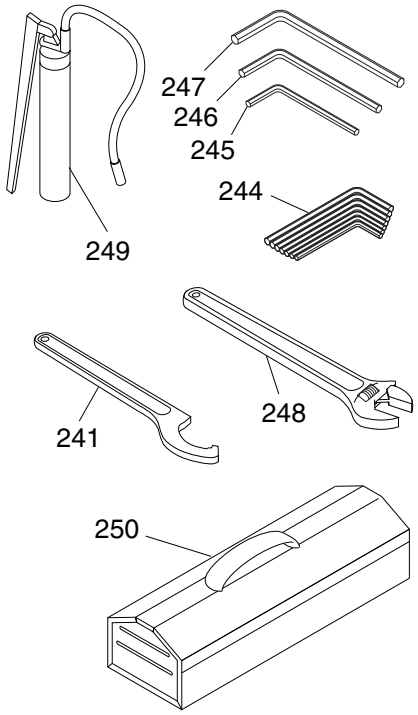

REF	PART #	DESCRIPTION
215	P0646215	GUIDE BAR
216	P0646216	SCALE 1M
217	P0646217	MOUNTING BRACKET
218	PSB70M	CAP SCREW M10-1.5 X 45
219	PLW06M	LOCK WASHER 10MM
220	P0646220	END CAP
221	PSB17M	CAP SCREW M4-.7 X 10
222	P0646222	PIVOT CLAMP
223	P0646223	LOCK LEVER M12-1.75 X 40
224	P0646224	LOCK LEVER M16-2 X 45
225	P0646225	EXTENSION BAR
226	PSB83M	CAP SCREW M6-1 X 55
227	PW03M	FLAT WASHER 6MM
228	PN01M	HEX NUT M6-1

REF	PART #	DESCRIPTION
229	P0646229	CLAMP
230	PSB169M	CAP SCREW M12-1.75 X 75
231	PW06M	FLAT WASHER 12MM
232	P0646232	SUPPORT SHAFT
233	P0646233	SENSOR MOUNT END CAP
241	P0646241	SPANNER WRENCH
244	P0646244	HEX WRENCH KIT 2.5-10MM
245	PAW12M	HEX WRENCH 12MM
246	PAW14M	HEX WRENCH 14MM
247	PAW17M	HEX WRENCH 17MM
248	P0646248	ADJUSTABLE WRENCH
249	P0646249	GREASE GUN
250	P0646250	TOOL BOX

Label Placement

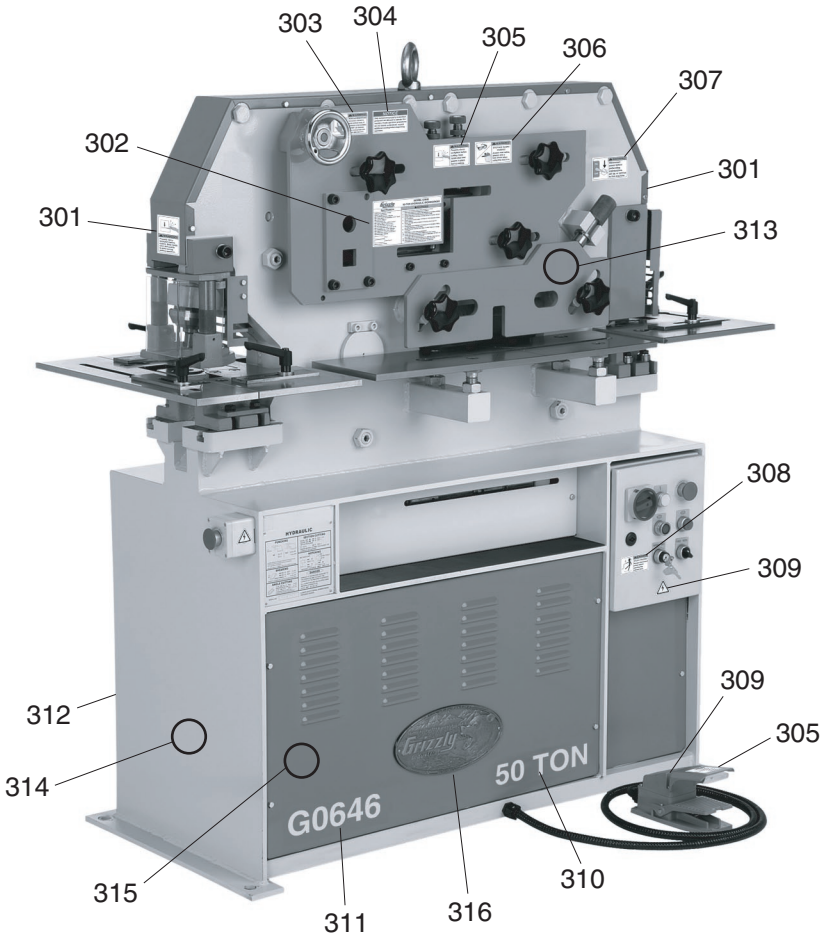

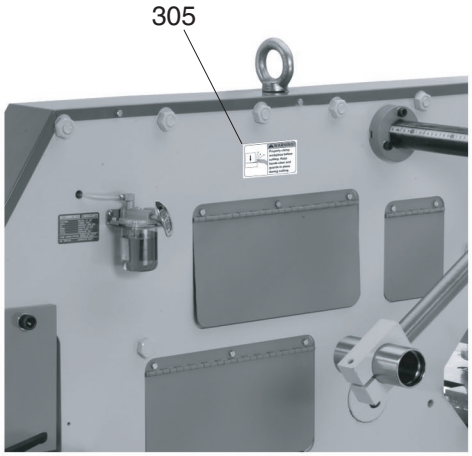

REF	PART #	DESCRIPTION
301	P0646301	CLAMP WARNING LABEL VERT.
302	P0646302	MACHINE ID LABEL (G0646)
302	P0647302	MACHINE ID LABEL (G0647)
303	PLABEL-12B	READ MANUAL LABEL HORZ.
304	P0646304	SAFE OPERATION NOTICE LABEL
305	P0646305	CLAMP WARNING LABEL HORZ.
306	P0646306	EYE/FACE HAZARD LABEL HORZ.
307	P0646307	DISCONNECT POWER LABEL HORZ.
308	P0646308	SHOCK HAZARD LABEL HORZ.
309	PLABEL-14	ELECTRICITY LABEL

REF	PART #	DESCRIPTION
310	P0646310	TONNAGE LABEL (G0646)
310	P0647310	TONNAGE LABEL (G0647)
311	P0646311	MODEL NUMBER LABEL (G0646)
311	P0647311	MODEL NUMBER LABEL (G0647)
312	PLABEL-34	PREWIRED 220V LABEL
313	P0646313	ORANGE TOUCH UP PAINT
314	PPAINT-11	GRIZZLY PUTTY TOUCH UP PAINT
315	PPAINT-1	GRIZZLY GREEN TOUCH UP PAINT
316	G8588	GRIZZLY OVAL NAMEPLATE

⚠WARNING

Safety labels warn about machine hazards and ways to prevent injury. The owner of this machine MUST maintain the original location and readability of the labels on the machine. If any label is removed or becomes unreadable, REPLACE that label before using the machine again. Contact Grizzly at (800) 523-4777 or www.grizzly.com to order new labels.