READ THIS FIRST

Model G0811

IMPORTANT UPDATE

For Machines Mfd. Since 02/16
and Owner's Manual Printed 11/16

For questions or help with this product contact Tech Support at (570) 546-9663 or techsupport@grizzly.com

The following changes were recently made since the owner's manual was printed:

- Specifications have been revised.
- Correct blade tension indicator has been added.
- Inventory list has been revised.
- **Steps 1–9** in the **Assembly** section have been revised.

Aside from this information, all other content in the owner's manual applies and MUST be read and understood for your own safety. **IMPORTANT: Keep this update with the owner's manual for future reference.**

For questions or help, contact our Tech Support at (570) 546-9663 or techsupport@grizzly.com.

Revised Specifications

Product Dimensions:

Weight ..... 572 lbs.

Shipping Dimensions:

Type ..... Cardboard w/Wood Pallet
Weight ..... 638 lbs.
Length x Width x Height ..... 64 x 23 x 48 in.

Corrected Part

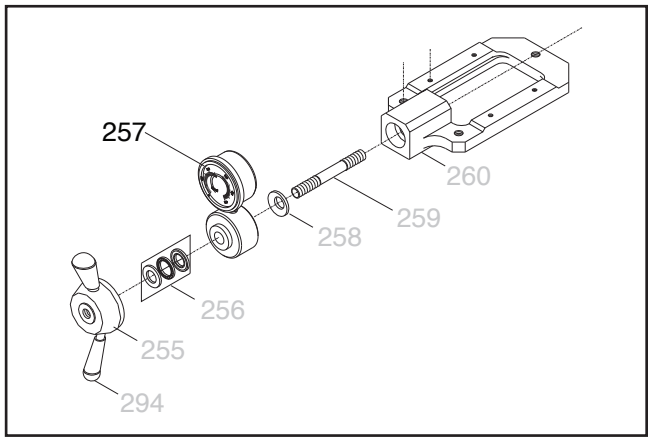

REF	PART #	DESCRIPTION
257	P0811257	HYDRAULIC BLADE TENSION GAUGE W/BASE

Hydraulic Tension Gauge

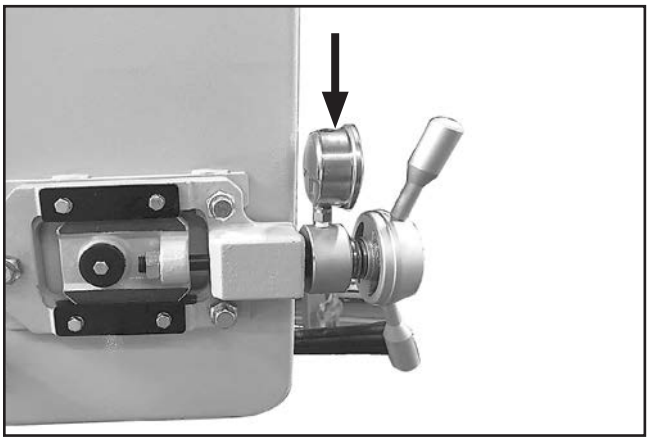

Figure 1. Location of hydraulic tension gauge.

COPYRIGHT © SEPTEMBER, 2017 BY GRIZZLY INDUSTRIAL, INC.
WARNING: NO PORTION OF THIS MANUAL MAY BE REPRODUCED IN ANY SHAPE OR FORM WITHOUT THE WRITTEN APPROVAL OF GRIZZLY INDUSTRIAL, INC.
#BL19183 PRINTED IN TAIWAN

SECTION 9: PARTS

We do our best to stock replacement parts when possible, but we cannot guarantee that all parts shown are available for purchase. Call **(800) 523-4777** or visit **www.grizzly.com/parts** to check for availability.

Stand & Base

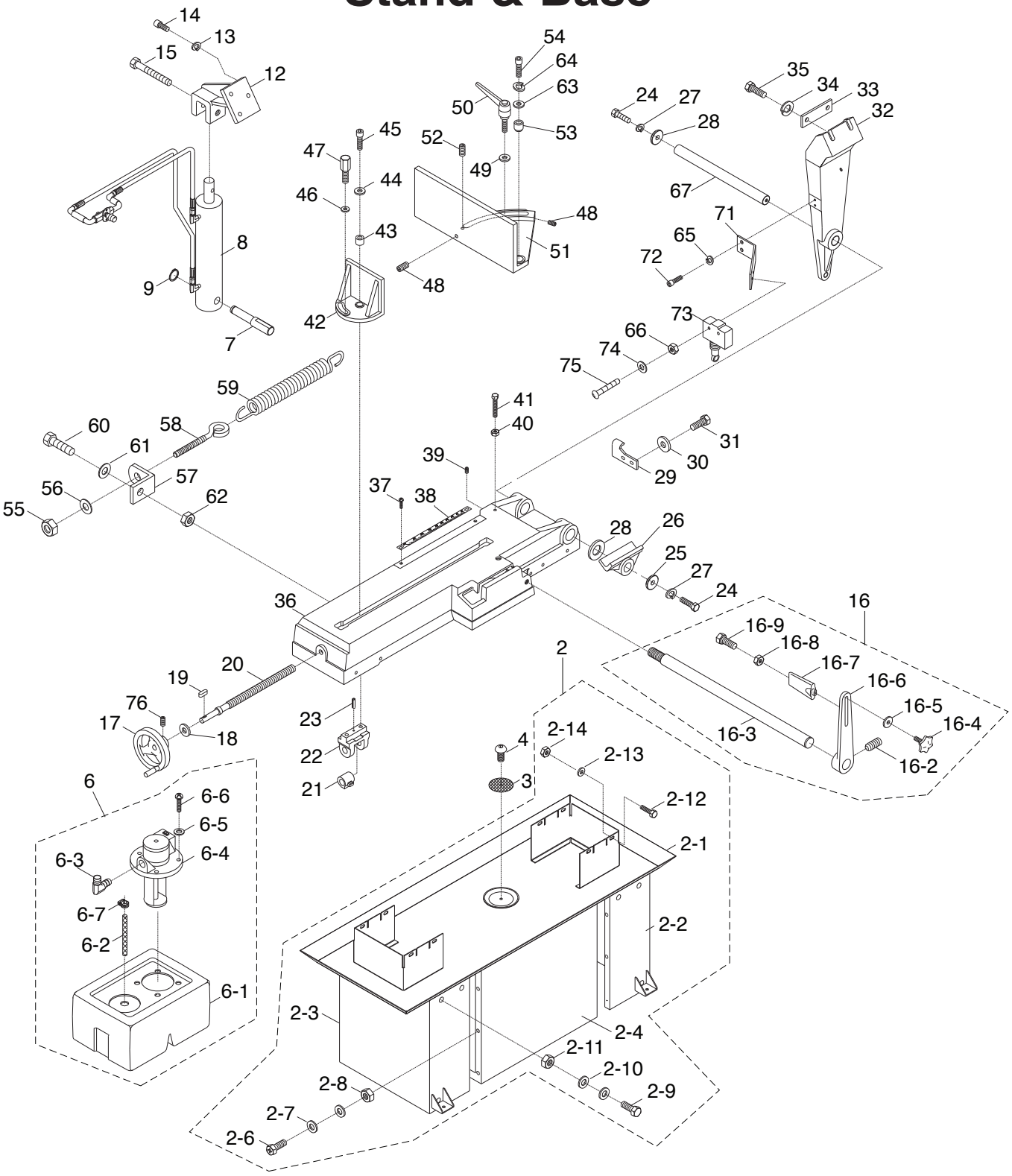

Stand & Base Parts List

REF	PART #	DESCRIPTION
2	P0811002	STAND ASSEMBLY
2-1	P0811002-1	COOLANT PAN
2-2	P0811002-2	STAND LEG (RIGHT)
2-3	P0811002-3	STAND LEG (LEFT)
2-4	P0811002-4	STAND LEG (FRONT)
2-6	P0811002-6	HEX BOLT 1/4-20 X 3/4
2-7	P0811002-7	FLAT WASHER 1/4
2-8	P0811002-8	HEX NUT 1/4-20
2-9	P0811002-9	HEX BOLT M10-1.5 X 20
2-10	P0811002-10	FLAT WASHER 10MM
2-11	P0811002-11	HEX NUT M10-1.5
2-12	P0811002-12	HEX BOLT M8-1.25 X 25
2-13	P0811002-13	FLAT WASHER 8MM
2-14	P0811002-14	HEX NUT M8-1.25
3	P0811003	COOLANT SCREEN
4	P0811004	BUTTON HD CAP SCR M6-1 X 15
6	P0811006	COOLANT PUMP ASSEMBLY
6-1	P0811006-1	COOLANT TANK
6-2	P0811006-2	COOLANT HOSE 3/4" X 20"
6-3	P0811006-3	PIPE ELBOW 1/2" X 3/8"
6-4	P0811006-4	COOLANT PUMP MOTOR 53W 220V 1-PH
6-5	P0811006-5	FLAT WASHER 1/4
6-6	P0811006-6	PHLP HD SCR 1/4-20 X 5/8
6-7	P0811006-7	HOSE CLAMP 3/4"
7	P0811007	CYLINDER PIVOT SHAFT
8	P0811008	HYDRAULIC CYLINDER ASSEMBLY
9	P0811009	EXT RETAINING RING 18MM
12	P0811012	UPPER CYLINDER BRACKET
13	P0811013	LOCK WASHER 8MM
14	P0811014	CAP SCREW M8-1.25 X 30
15	P0811015	CAP SCREW M10-1.5 X 50
16	P0811016	WORK STOP ASSEMBLY
16-2	P0811016-2	SET SCREW M6-1 X 10
16-3	P0811016-3	WORK STOP ROD
16-4	P0811016-4	KNOB BOLT M6-1 X 30, 6-LOBE
16-5	P0811016-5	FLAT WASHER 1/4
16-6	P0811016-6	WORK STOP BRACKET
16-7	P0811016-7	DISTANCE SET BRACKET
16-8	P0811016-8	HEX NUT M10-1.5
16-9	P0811016-9	HEX BOLT M10-1.5 X 25
17	P0811017	HANDWHEEL TYPE-3 140D X 14B-K X M8-1.25
18	P0811018	FLAT WASHER 7/16
19	P0811019	KEY 5 X 5 X 15
20	P0811020	VISE LEADSCREW
21	P0811021	LEADSCREW NUT
22	P0811022	LEADSCREW NUT BRACKET
23	P0811023	DOWEL PIN 5 X 34
24	P0811024	CAP SCREW M10-1.5 X 25

REF	PART #	DESCRIPTION
25	P0811025	DOCK WASHER 10 X 40 X 6MM
27	P0811027	LOCK WASHER 10MM
28	P0811028	SPACER 10MM
29	P0811029	LIMIT SWITCH BRACKET
30	P0811030	FLAT WASHER 8MM
31	P0811031	HEX BOLT M8-1.25 X 20
32	P0811032	REAR PIVOT BRACKET
33	P0811033	SPRING BRACKET
34	P0811034	LOCK WASHER 10MM
35	P0811035	HEX BOLT M10-1.5 X 35
36	P0811036	VISE BASE
37	P0811037	PHLP HD SCR M5-.8 X 8
38	P0811038	VISE SCALE
39	P0811039	SET SCREW M8-1.25 X 10
40	P0811040	HEX NUT M10-1.5
41	P0811041	HEX BOLT M10-1.5 X 45
42	P0811042	VISE JAW BRACKET
43	P0811043	BUSHING
44	P0811044	FLAT WASHER 10MM
45	P0811045	CAP SCREW M10-1.5 X 35
46	P0811046	FLAT WASHER 10MM
47	P0811047	HEX LOCK BOLT M10-1.5 X 35, 80L
48	P0811048	SET SCREW M8-1.25 X 30
49	P0811049	FLAT WASHER 10MM
50	P0811050	ADJUSTABLE HANDLE M10-1.5 X 40, 100L
51	P0811051	VISE JAW BRACKET (REAR)
52	P0811052	SET SCREW M6-1 X 10
53	P0811053	BUSHING
54	P0811054	CAP SCREW M12-1.75 X 40
55	P0811055	HEX NUT M10-1.5
56	P0811056	FLAT WASHER 10MM
57	P0811057	SPRING HANDLE BRACKET
58	P0811058	EYE BOLT M10-1.5 X 70, 20 I.D.
59	P0811059	EXTENSION SPRING 6.65 X 300 X 38
60	P0811060	HEX BOLT M8-1.25 X 10
61	P0811061	FLAT WASHER 8MM
62	P0811062	HEX NUT M8-1.25
63	P0811063	FLAT WASHER 12MM
64	P0811064	LOCK WASHER 12MM
65	P0811065	FLAT WASHER 6MM
66	P0811066	HEX NUT M4-.7
67	P0811067	PIVOT SHAFT
71	P0811071	LIMIT SWITCH SUPPORT
72	P0811072	BUTTON HD CAP SCR M6-1 X 12
73	P0811073	LIMIT SWITCH KEYON KM1309
74	P0811074	EXT TOOTH WASHER 6MM
75	P0811075	PHLP HD SCR M4-.7 X 30
76	P0811076	SET SCREW M8-1.25 X 14

Frame & Motor

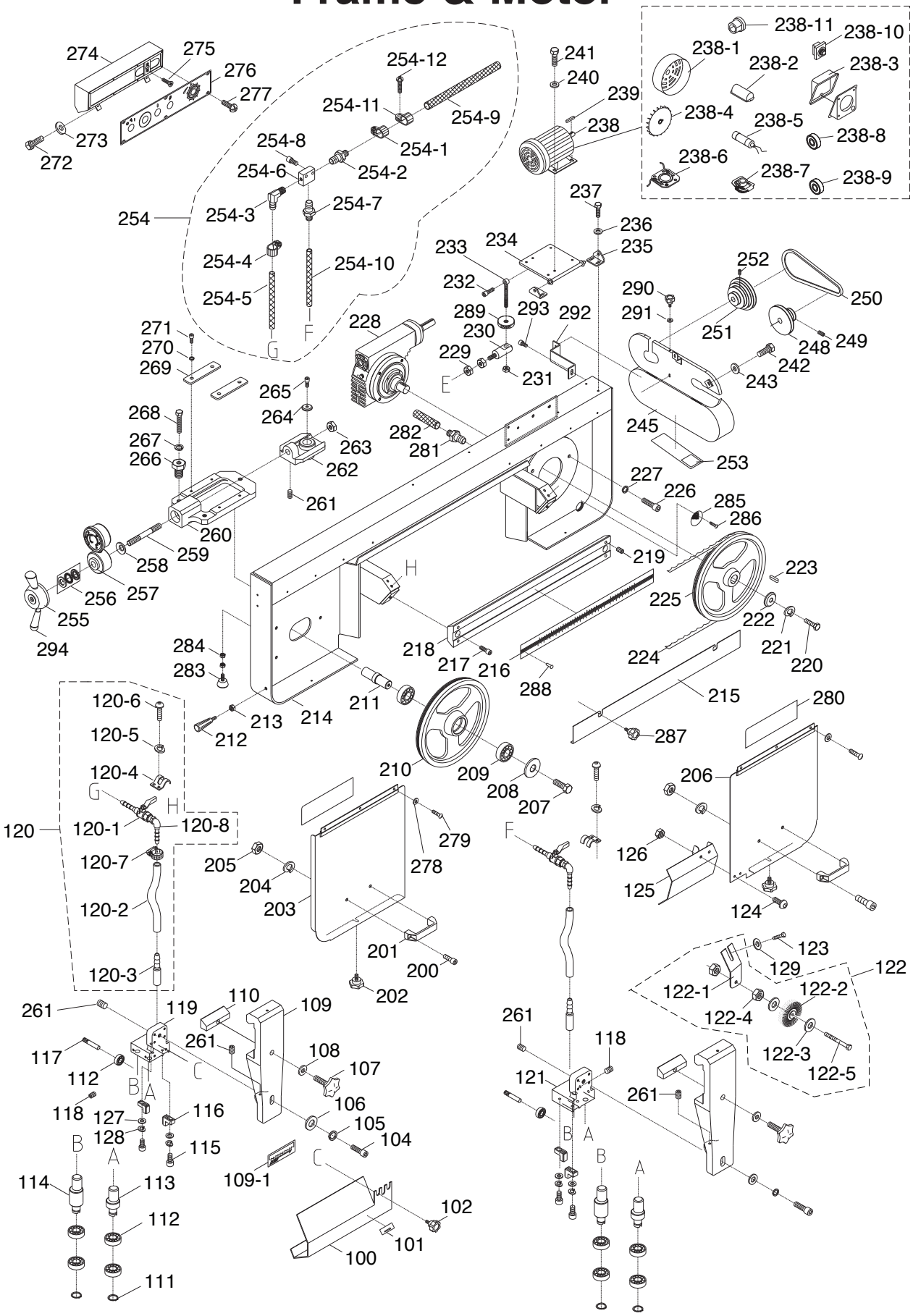

274
275
276
277
273
272
254-12
254-11
254-9
254-8
254-1
254-6
254-2
254-3
254-7
254
254-4
254-10
254-5
G
F
241
240
239
238
238-11
238-10
238-1
238-2
238-3
238-4
238-5
238-8
238-6
238-7
238-9
237
236
235
234
233
232
289
293
292
230
229
231
E
228
271
270
269
265
264
263
262
261
268
267
266
282
281
290
291
252
250
251
248
249
242
243
245
253
227
226
285
286
260
259
258
257
256
255
294
H
219
223
225
222
221
220
224
218
217
216
288
284
283
213
214
211
212
215
287
280
120-6
120-5
120-4
G
H
120
120-1
120-8
120-7
120-2
120-3
210
209
208
207
206
279
278
205
204
203
201
200
202
F
126
125
124
123
129
122
122-1
122-2
122-4
122-3
122-5
261
119
110
109
117
112
B
A
C
108
107
106
105
104
118
127
128
116
115
114
113
109-1
102
101
100
111
121
B
A

Frame & Motor Parts List

REF	PART #	DESCRIPTION
100	P0811100	BLADE GUARD (FRONT)
101	P0811101	BLADE DIRECTION LABEL
102	P0811102	KNOB BOLT M6-1 X 10, 6-LOBE
104	P0811104	CAP SCREW M10-1.5 X 30
105	P0811105	LOCK WASHER 10MM
106	P0811106	FLAT WASHER 10MM
107	P0811107	KNOB BOLT M10-1.5, 6-LOBE
108	P0811108	FLAT WASHER 10MM
109	P0811109	ARM (LEFT)
109-1	P0811109-1	BLADE DIRECTION LABEL
110	P0811110	GIB
111	P0811111	EXT RETAINING RING 8MM
112	P0811112	BALL BEARING 608-2RS
113	P0811113	BLADE GUIDE SHAFT (REAR)
114	P0811114	BLADE GUIDE SHAFT (FRONT)
115	P0811115	CAP SCREW M6-1 X 20
116	P0811116	BLADE GUIDE, CARBIDE
117	P0811117	BEARING SHAFT
118	P0811118	SET SCREW M6-1 X 10
119	P0811119	BLADE GUIDE ADJ BRACKET (LEFT)
120	P0811120	COOLANT HOSE ASSEMBLY
120-1	P0811120-1	COOLANT VALVE 1/2"
120-2	P0811120-2	COOLANT HOSE 1/4" X 60"
120-3	P0811120-3	HOSE FITTING 1/4"
120-4	P0811120-4	COOLANT VALVE MOUNTING BRACKET
120-5	P0811120-5	LOCK WASHER 6MM
120-6	P0811120-6	BUTTON HD CAP SCR M6-1 X 12
120-7	P0811120-7	HOSE CLAMP 1/4"
120-8	P0811120-8	COOLANT VALVE BODY 1/8 X 1/4 (90 DEG)
121	P0811121	BLADE GUIDE ADJ BRACKET (REAR)
122	P0811122	BLADE BRUSH ASSEMBLY
122-1	P0811122-1	BRUSH SUPPORT
122-2	P0811122-2	BRUSH
122-3	P0811122-3	FLAT WASHER 6MM
122-4	P0811122-4	HEX NUT M6-1
122-5	P0811122-5	HEX BOLT M6-1 X 35
123	P0811123	HEX BOLT M6-1 X 10
124	P0811124	BUTTON HD CAP SCR M6-1 X 12
125	P0811125	BLADE GUARD (REAR)
126	P0811126	HEX NUT M6-1
127	P0811127	FLAT WASHER 6MM
128	P0811128	LOCK WASHER 6MM
129	P0811129	FLAT WASHER 6MM
200	P0811200	CAP SCREW M8-1.25 X 15
201	P0811201	HANDLE
202	P0811202	KNOB BOLT M6-1 X 10, 7-LOBE
203	P0811203	BLADE COVER (LEFT)
204	P0811204	LOCK WASHER 8MM
205	P0811205	HEX NUT M8-1.25
206	P0811206	BLADE COVER (RIGHT)
207	P0811207	HEX BOLT M8-1.25 X 20
208	P0811208	DOCK WASHER 8 X 40 X 6.3MM
209	P0811209	BALL BEARING 6205ZZ
210	P0811210	IDLER WHEEL 1-1/8" X 12"
211	P0811211	IDLER SHAFT
212	P0811212	HANDLE M10-1.5 X 16, 112L

REF	PART #	DESCRIPTION
213	P0811213	HEX NUT 3/8-16
214	P0811214	BODY FRAME
215	P0811215	BLADE COVER
216	P0811216	SCALE
217	P0811217	CAP SCREW M12-1.75 X 20
218	P0811218	SCALE BRACKET
219	P0811219	SET SCREW M8-1.25 X 20
220	P0811220	HEX BOLT M10-1.5 X 20
221	P0811221	LOCK WASHER 10MM
222	P0811222	DOCK WASHER 10 X 40 X 6MM
223	P0811223	KEY 7 X 7 X 30
224	P0811224	BLADE 114-1/2" X 1" X .035"
225	P0811225	DRIVE WHEEL 1-1/8" X 12"
226	P0811226	CAP SCREW M10-1.5 X 20
227	P0811227	LOCK WASHER 10MM
228	P0811228	GEARBOX ASSEMBLY
229	P0811229	LOCK NUT M10-1.5
230	P0811230	MOTOR ELEVATION MOUNT M10-1.5 X 30
231	P0811231	HEX NUT M12-1.75
232	P0811232	CAP SCREW M10-1.5 X 50
233	P0811233	MOTOR ELEVATION BOLT M12-1.75 X 120
234	P0811234	MOTOR PLATE
235	P0811235	MOTOR BRACKET
236	P0811236	FLAT WASHER 6MM
237	P0811237	HEX BOLT M6-1 X 15
238	P0811238	MOTOR 1.5HP 220V 1-PH
238-1	P0811238-1	MOTOR FAN COVER
238-2	P0811238-2	CAPACITOR COVER
238-3	P0811238-3	MOTOR JUNCTION BOX
238-4	P0811238-4	MOTOR FAN
238-5	P0811238-5	S CAPACITOR 150M 250V 1-3/8 X 2-5/8
238-6	P0811238-6	CONTACT PLATE
238-7	P0811238-7	CENTRIFUGAL SWITCH
238-8	P0811238-8	BALL BEARING 6205ZZ
238-9	P0811238-9	BALL BEARING 6203ZZ
238-10	P0811238-10	CIRCUIT BREAKER KUOYUH 88 SERIES 13A
238-11	P0811238-11	STRAIN RELIEF TYPE-2 16MM
239	P0811239	KEY 6 X 6 X 35
240	P0811240	FLAT WASHER 8MM
241	P0811241	HEX BOLT M8-1.25 X 15
242	P0811242	HEX BOLT M8-1.25 X 15
243	P0811243	FLAT WASHER 8MM
245	P0811245	MOTOR PULLEY COVER ASSEMBLY
248	P0811248	SPINDLE PULLEY
249	P0811249	SET SCREW M8-1.25 X 10
250	P0811250	V-BELT A32
251	P0811251	MOTOR PULLEY
252	P0811252	SET SCREW M8-1.25 X 10
253	P0811253	BLADE SPEED LABEL
254	P0811254	3-WAY VALVE ASSEMBLY
254-1	P0811254-1	HOSE CLAMP 1/2"
254-2	P0811254-2	MICRO CONTROL BLOCK 1/4" X 1/2" (ST)
254-3	P0811254-3	MICRO CONTROL BLOCK 1/4" X 1/2" (90 DEG)
254-4	P0811254-4	HOSE CLAMP 1/2"
254-5	P0811254-5	COOLANT HOSE 1/4" X 3/32" X 32"
254-6	P0811254-6	3-WAY VALVE

Frame & Motor Parts List (Cont.)

REF	PART #	DESCRIPTION
254-7	P0811254-7	STRAIGHT CONNECTOR PT 1/4" X 1/4"
254-8	P0811254-8	CAP SCREW M6-1 X 30
254-9	P0811254-9	COOLANT HOSE 1/4" X 3/32" X 57"
254-10	P0811254-10	COOLANT HOSE 1/4" X 1/8" X 13"
254-11	P0811254-11	HOSE CLIP 1/2"
254-12	P0811254-12	PHLP HD SCR M6-1 X 10
255	P0811255	BLADE TENSION HUB
256	P0811256	THRUST BEARING 51203
257	P0811257	HYDRAULIC BLADE TENSION GAUGE W/BASE
258	P0811258	BELLEVILLE DISC SPRING 16.3 X 31.5 X 1.8
259	P0811259	BLADE TENSION LEADSCREW
260	P0811260	BLADE TENSION BRACKET
261	P0811261	SET SCREW M6-1 X 16
262	P0811262	ANCHOR BRACKET
263	P0811263	HEX NUT M16-2
264	P0811264	DOCK WASHER 8MM
265	P0811265	HEX BOLT M8-1.25 X 20
266	P0811266	HEX BOLT W/INT. THREADS M10-1.5
267	P0811267	LOCK WASHER 10MM
268	P0811268	HEX BOLT M10-1.5 X 60
269	P0811269	SLIDING PLATE
270	P0811270	LOCK WASHER 8MM
271	P0811271	CAP SCREW M8-1.25 X 10

REF	PART #	DESCRIPTION
272	P0811272	HEX BOLT M6-1 X 12
273	P0811273	FLAT WASHER 6MM
274	P0811274	CONTROL PANEL BOX
275	P0811275	FLAT HD SCR M6-1 X 12
276	P0811276	CONTROL PANEL FACEPLATE
277	P0811277	PHLP HD SCR M5-.8 X 8
278	P0811278	FLAT WASHER 6MM
279	P0811279	BUTTON HD CAP SCR M6-1 X 10
280	P0811280	BLADE COVER GASKET
281	P0811281	COOLANT HOSE CONNECTOR 1/2" NPT
282	P0811282	COOLANT HOSE 18 X 2.4 X 190MM
283	P0811283	ADJUSTABLE STOP M8-1.25 X 20 RUBBER
284	P0811284	HEX NUT M8-1.25
285	P0811285	SCREEN
286	P0811286	BUTTON HD CAP SCR M6-1 X 10
287	P0811287	KNOB BOLT M6-1 X 10, 6-LOBE
288	P0811288	RIVET 2 X 5MM NAMEPLATE STEEL
289	P0811289	KNURLED KNOB M12-1.75
290	P0811290	KNOB BOLT M6-1 X 14, 6-LOBE
291	P0811291	FLAT WASHER 6MM
292	P0811292	PULLEY COVER BRACKET
293	P0811293	CAP SCREW M6-1 X 10
294	P0811294	HANDLE M12-1.75 X 10, 97L

Electrical Components

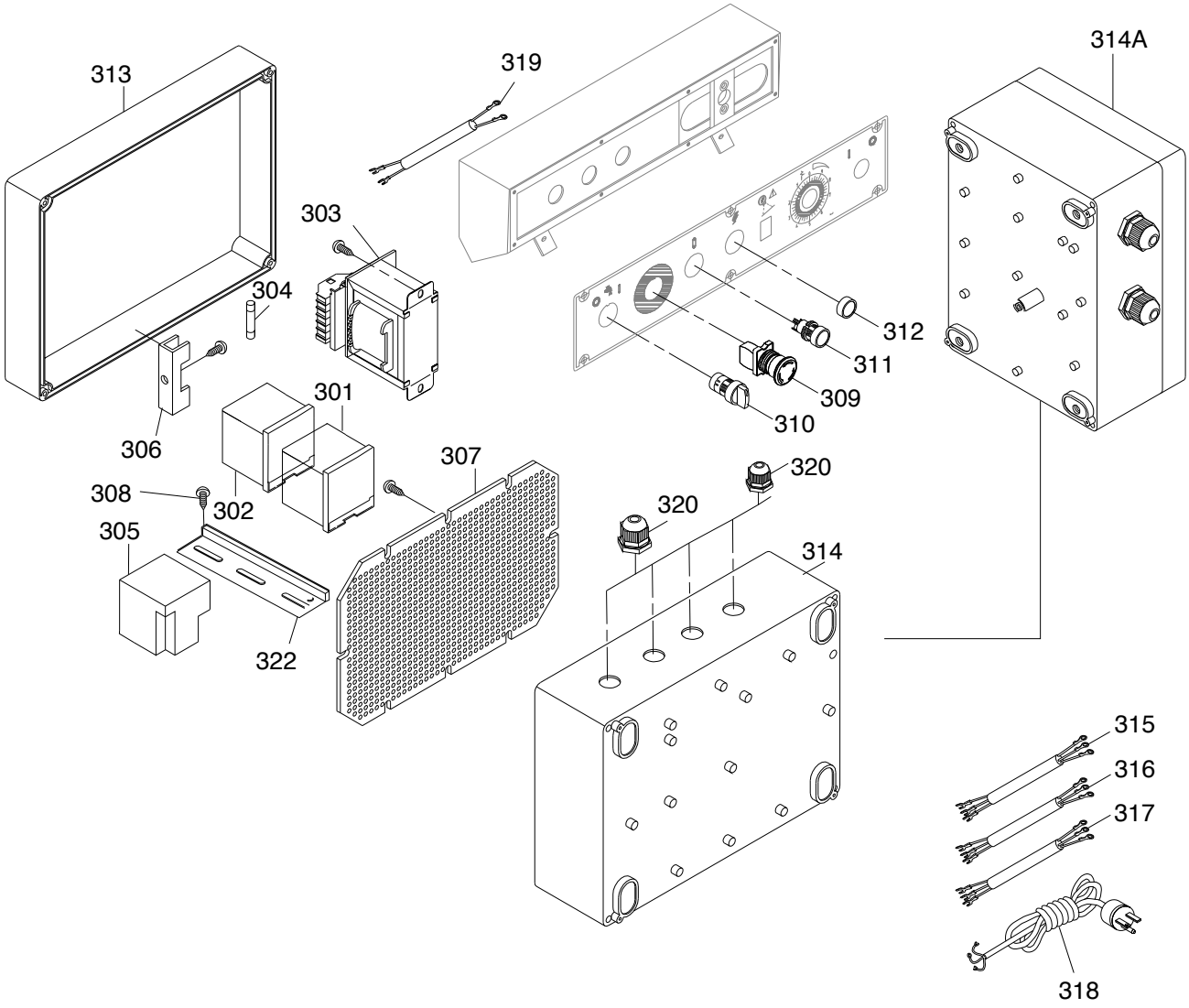

REF	PART #	DESCRIPTION
301	P0811301	CONTACTOR TECO CU-11 24V
302	P0811302	CONTACTOR KEDU JD6 24V
303	P0811303	TRANSFORMER LCE TBSM-100030
304	P0811304	FUSE 2A 250V FAST-ACTING GLASS
305	P0811305	OL RELAY TECO RHU-10/16K 11.3-16A
306	P0811306	FUSE BASE
307	P0811307	MOUNTING PANEL
308	P0811308	TAP SCREW #10 X 3/8
309	P0811309	E-STOP KEDU HY57B 22MM
310	P0811310	PUMP SWITCH NHD CB-10 22MM
311	P0811311	POWER SWITCH NHD CB-10 22MM

REF	PART #	DESCRIPTION
312	P0811312	POWER LIGHT NHD NLD-22
313	P0811313	ELECTRICAL BOX COVER (REAR)
314A	P0811314A	ELECTRICAL BOX ASSEMBLY
314	P0811314	ELECTRICAL BOX COVER (FRONT)
315	P0811315	CONTROL CORD 19G 5W 62"
316	P0811316	MOTOR CORD 14G 3W 46"
317	P0811317	PUMP CORD 18G 3W 30"
318	P0811318	POWER CORD 14G 3W 72" 6-15P
319	P0811319	LIMIT SWITCH CORD 18G 2W 36"
320	P0811320	STRAIN RELIEF TYPE-3 PG11
322	P0811322	DIN RAIL 3-1/2"

Labels & Cosmetics

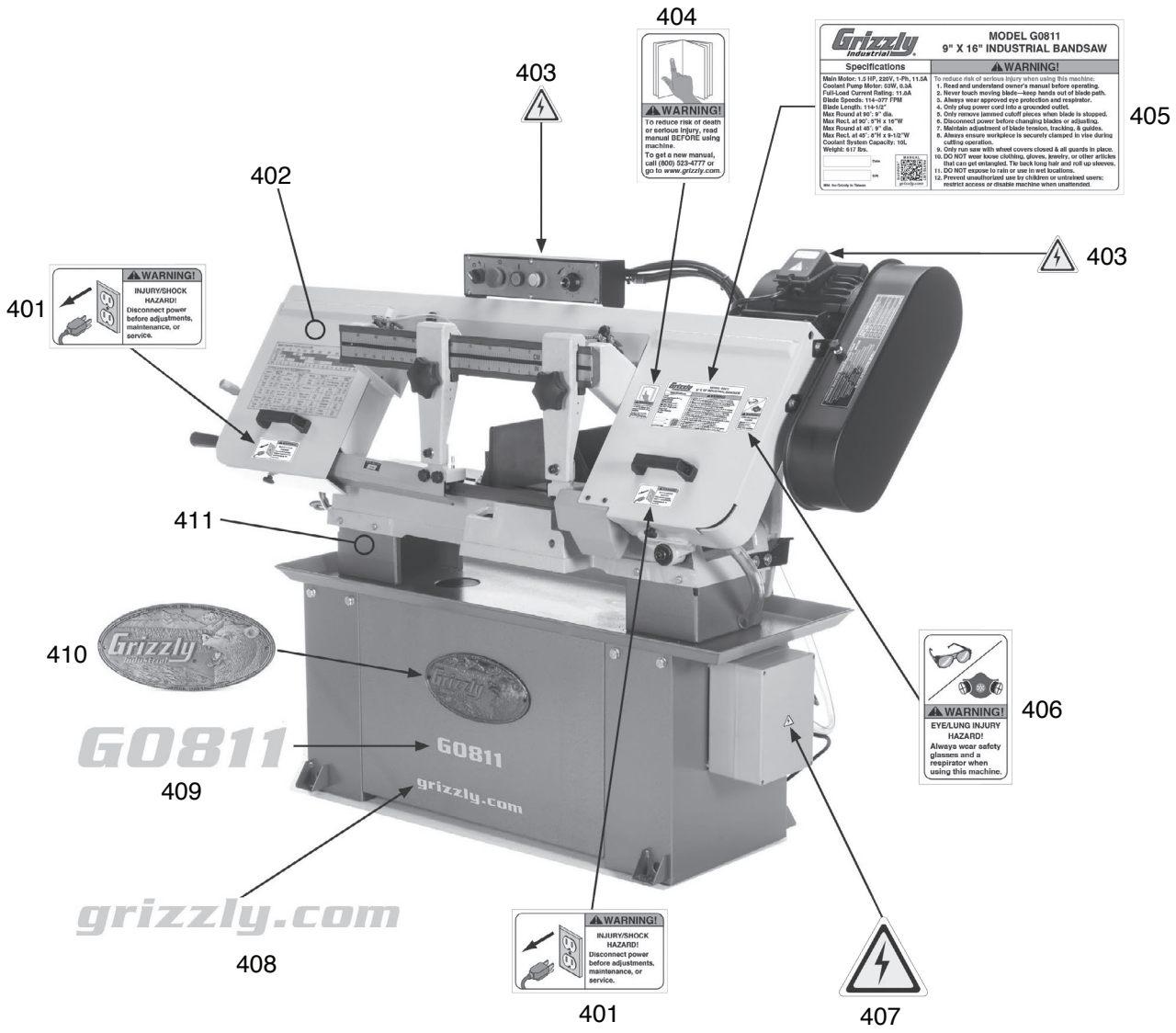

REF	PART #	DESCRIPTION
401	P0811401	DISCONNECT POWER LABEL
402	P0811402	TOUCH-UP PAINT, GRIZZLY BEIGE
403	P0811403	ELECTRICITY LABEL, MEDIUM
404	P0811404	READ MANUAL LABEL
405	P0811405	MACHINE ID LABEL
406	P0811406	GLASSES/RESPIRATOR LABEL

REF	PART #	DESCRIPTION
407	P0811407	ELECTRICITY LABEL, LARGE
408	P0811408	GRIZZLY.COM LABEL
409	P0811409	MODEL NUMBER LABEL
410	P0811410	GRIZZLY NAMEPLATE
411	P0811411	TOUCH-UP PAINT, GRIZZLY GREEN

⚠WARNING

Safety labels help reduce the risk of serious injury caused by machine hazards. If any label comes off or becomes unreadable, the owner of this machine MUST replace it in the original location before resuming operations. For replacements, contact (800) 523-4777 or www.grizzly.com.