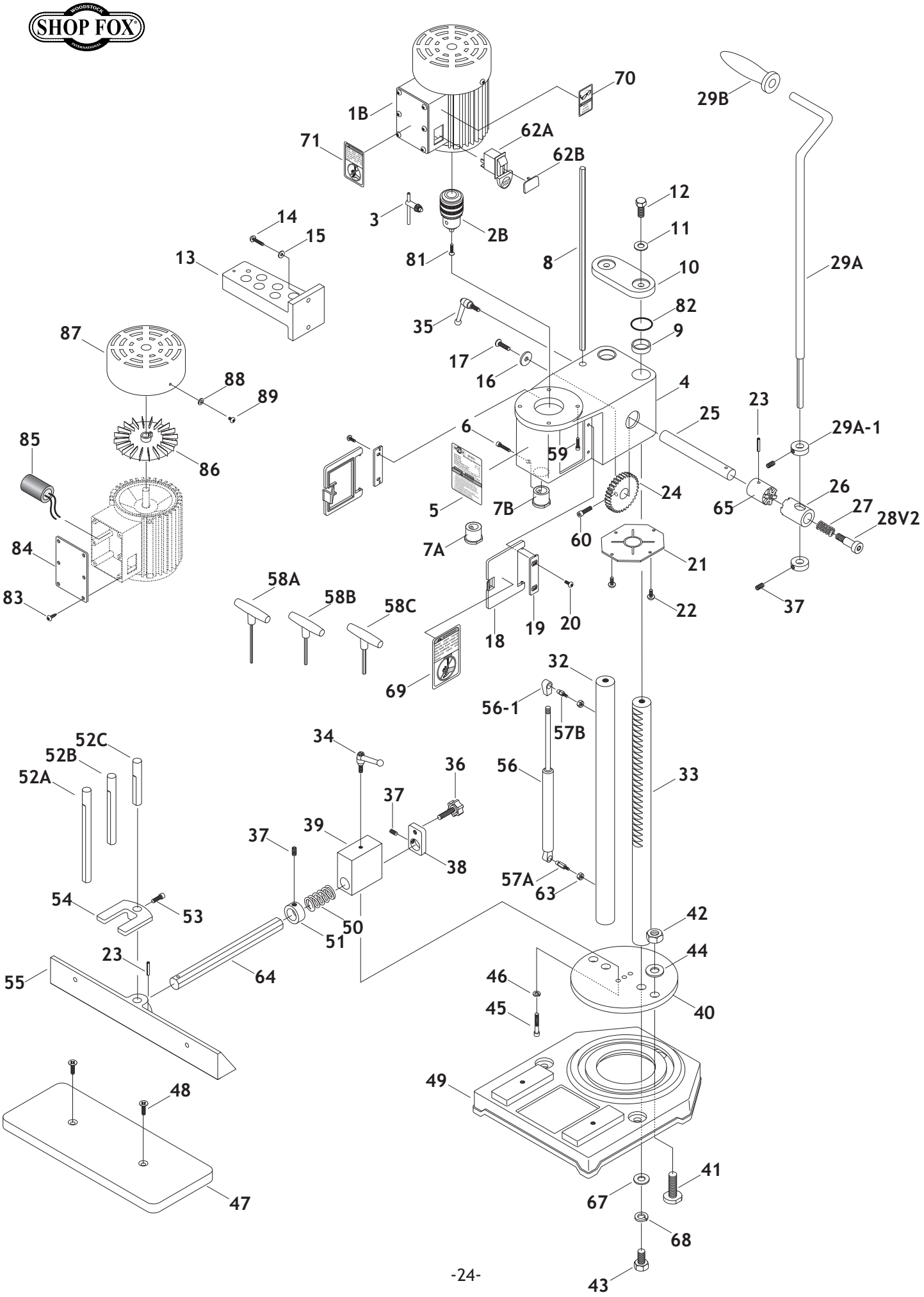

SHOP FOX
WOODSTOCK INTERNATIONAL
1B
70
29B
71
62A
62B
12
3
2B
11
14
15
13
81
8
10
29A
82
35
9
87
17
16
4
88
89
23
25
29A-1
6
85
59
86
24
26
5
7B
65
27
28V2
60
7A
21
84
58A
58B
58C
22
37
83
18
19
20
32
69
56-1
57B
52C
34
52B
36
56
33
52A
37
39
37
38
57A
63
54
53
50
51
42
23
44
55
64
46
40
45
49
48
41
47
67
68
43

PARTS

REF	PART #	DESCRIPTION
01B	X1671001B	MOTOR
02B	X1671002B	CHUCK JT MOUNT
3	X1671003	CHUCK KEY
4	X1671004	HEAD CASTING
5	X1671005	LABEL
6	X1671006	CAP SCREW M8-1.25 X 20
07A	X1671007A	⅝" BUSHING
07B	X1671007B	¾" BUSHING
8	X1671008	DEPTH STOP ROD
9	X1671009	GUIDE BUSHING
10	X1671010	STOP PLATE
11	X1671011	FLAT WASHER 10MM
12	X1671012	HEX BOLT M10-1.5 X 25
13	X1671013	HOLDER
14	X1671014	PHLP HD SCR M6-1 X 12
15	X1671015	FLAT WASHER 6MM
16	X1671016	SPECIAL WASHER 6MM
17	X1671017	FLAT HD SCR M6-1 X 12
18	X1671018	COVER
19	X1671019	HINGE
20	X1671020	PHLP HD SCR 5-.8 X 10
21	X1671021	COVER PLATE
22	X1671022	PHLP HD SCR M4-.7 X 12
23	X1671023	ROLL PIN 5 X 30
24	X1671024	GEAR
25	X1671025	GEAR SHAFT
26	X1671026	CLUTCH COLLAR
27	X1671027	SPRING
28	X1671028	SHOULDER BOLT M10-1.5 X 15
28V2	X1671028V2	SHOULDER BOLT M10-1.5 X 28 V2.11.11
29A	X1671029A	HANDLE
29A-1	X1671029A-1	STOP COLLAR
29B	X1671029B	HAND GRIP
32	X1671032	COLUMN
33	X1671033	RACK COLUMN
34	X1671034	LOCK KNOB M8-1.25 X 35
35	X1671035	LOCK KNOB M8-1.25 X 20
36	X1671036	KNOB M8-1.25 X 56
37	X1671037	SETSCREW M8-1.25 X 10
38	X1671038	STOP BRACKET
39	X1671039	GUIDE BRACKET
40	X1671040	ROTARY TABLE TOP
41	X1671041	STUD
42	X1671042	HEX NUT M14-2

REF	PART #	DESCRIPTION
43	X1671043	HEX BOLT M10-1.5 X 25
44	X1671044	FLAT WASHER 9/16"
45	X1671045	CAP SCREW M10-1.5 X 25
46	X1671046	LOCK WASHER 8MM
47	X1671047	TABLE
48	X1671048	FLAT HD SCR M8-1.25 X 25
49	X1671049	BASE
50	X1671050	SPRING
51	X1671051	COLLAR
52A	X1671052A	ROD
52B	X1671052B	ROD
52C	X1671052C	ROD
53	X1671053	CAP SCREW M8-1.25 X 20
54	X1671054	HOLD DOWN
55	X1671055	FENCE
56	X1671056	GAS SPRING
56-1	X1671056-1	GAS SPRING END
57A	X1671057A	LOWER JUNCTION SCREW
57B	X1671057B	UPPER JUNCTION SCREW
58A	X1671058A	T-HANDLE 4MM
58B	X1671058B	T-HANDLE 6MM
58C	X1671058C	T-HANDLE 8MM
59	X1671059	CAP SCREW M6-1 X 25
60	X1671060	CAP SCREW M8-1.25 X 25
62A	X1671062A	SWITCH
62B	X1671062B	SWITCH KEY
63	X1671063	HEX NUT M6-1
64	X1671064	FENCE SUPPORT ROD
65	X1671065	CLUTCH
67	X1671067	FLAT WASHER 10MM
68	X1671068	LOCK WASHER 10MM
69	X1671069	HAND/CHISEL WARNING
70	X1671070	SAFETY GLASSES WARNING
71	X1671071	DEPTH STOP WARNING
80	X1671080	COLLAR
81	X1671081	FLAT HD SCR M6-1 X 20
82	X1671082	O-RING 32 X 3
83	X1671083	WOOD SCREW M3 X 12
84	X1671084	LID
85	X1671085	CAPACITOR 30 MFD
86	X1671086	MOTOR FAN
87	X1671087	FAN COVER
88	X1671088	FLAT WASHER 5MM
89	X1671089	PHLP HD SCR M5-.8 X 8MM