SECTION 8: PARTS

Main

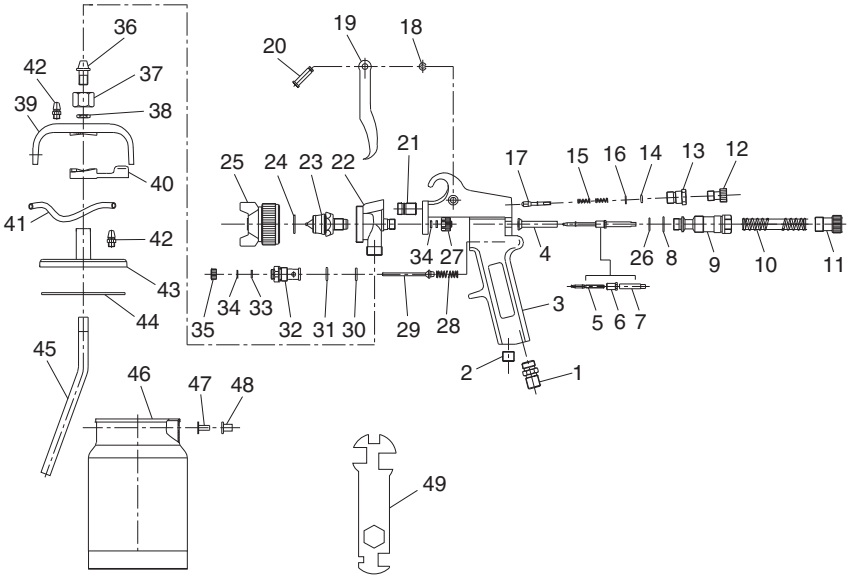

REF	PART #	DESCRIPTION
1	PT23092001	AIR INLET CONNECTOR 1/4" NPT
2	PT23092002	INLET SCREW
3	PT23092003	GUN BODY
4	PT23092004	NEEDLE HOUSING
5	PT23092005	FLUID ADJUSTMENT NEEDLE
6	PT23092006	NEEDLE SLEEVE
7	PT23092007	SPRING CORE
8	PT23092008	FLAT WASHER 12.5 X 15.7 X 1 PL
9	PT23092009	SPRING HOUSING
10	PT23092010	NEEDLE COMPRESSION SPRING
11	PT23092011	FLUID CONTROL KNOB
12	PT23092012	PATTERN CONTROL KNOB
13	PT23092013	PATTERN NEEDLE SEAT
14	PT23092014	O-RING 2.5 X 2.1
15	PT23092015	PATTERN SPRING
16	PT23092016	FLAT WASHER 3.2 X 6 X 0.5
17	PT23092017	PATTERN NEEDLE
18	PT23092018	EXT RETAINING RING 4MM
19	PT23092019	TRIGGER
20	PT23092020	TRIGGER PIN
21	PT23092021	CONNECTOR SCREW
22	PT23092022	HEAD
23	PT23092023	NOZZLE
24	PT23092024	FLAT WASHER 29 X 36.8 X 5.5 PL
25	PT23092025	ATOMIZING CAP

REF	PART #	DESCRIPTION
26	PT23092026	O-RING 8.5 X 1.2
27	PT23092027	DIRECTION SCREW
28	PT23092028	COMPRESSION SPRING 0.8 X 7.3 X 30.2
29	PT23092029	TRIGGER STEM
30	PT23092030	STEM WASHER
31	PT23092031	O-RING 9 X 1.8
32	PT23092032	STEM SEAT
33	PT23092033	FLAT WASHER 2.8 X 8 X 1 FIBER
34	PT23092034	O-RING 2 X 1.5
35	PT23092035	STEM SEAT NUT
36	PT23092036	FLUID INLET NOZZLE
37	PT23092037	INLET HEX NUT
38	PT23092038	INLET THIN NUT
39	PT23092039	LOCK ARM
40	PT23092040	LOCK LEVER
41	PT23092041	FLUID HOSE
42	PT23092042	HOSE CONNECTOR
43	PT23092043	CUP LID
44	PT23092044	LID GASKET
45	PT23092045	SYPHON TUBE
46	PT23092046	FLUID CUP
47	PT23092047	CUP SCREW
48	PT23092048	CUP PIN
49	PT23092049	MULTI-WRENCH

Parts breakdown provided for reference only. Not all parts shown are available for purchase.

BUY PARTS ONLINE AT GRIZZLY.COM!
Scan QR code to visit our Parts Store.