PARTS

Main

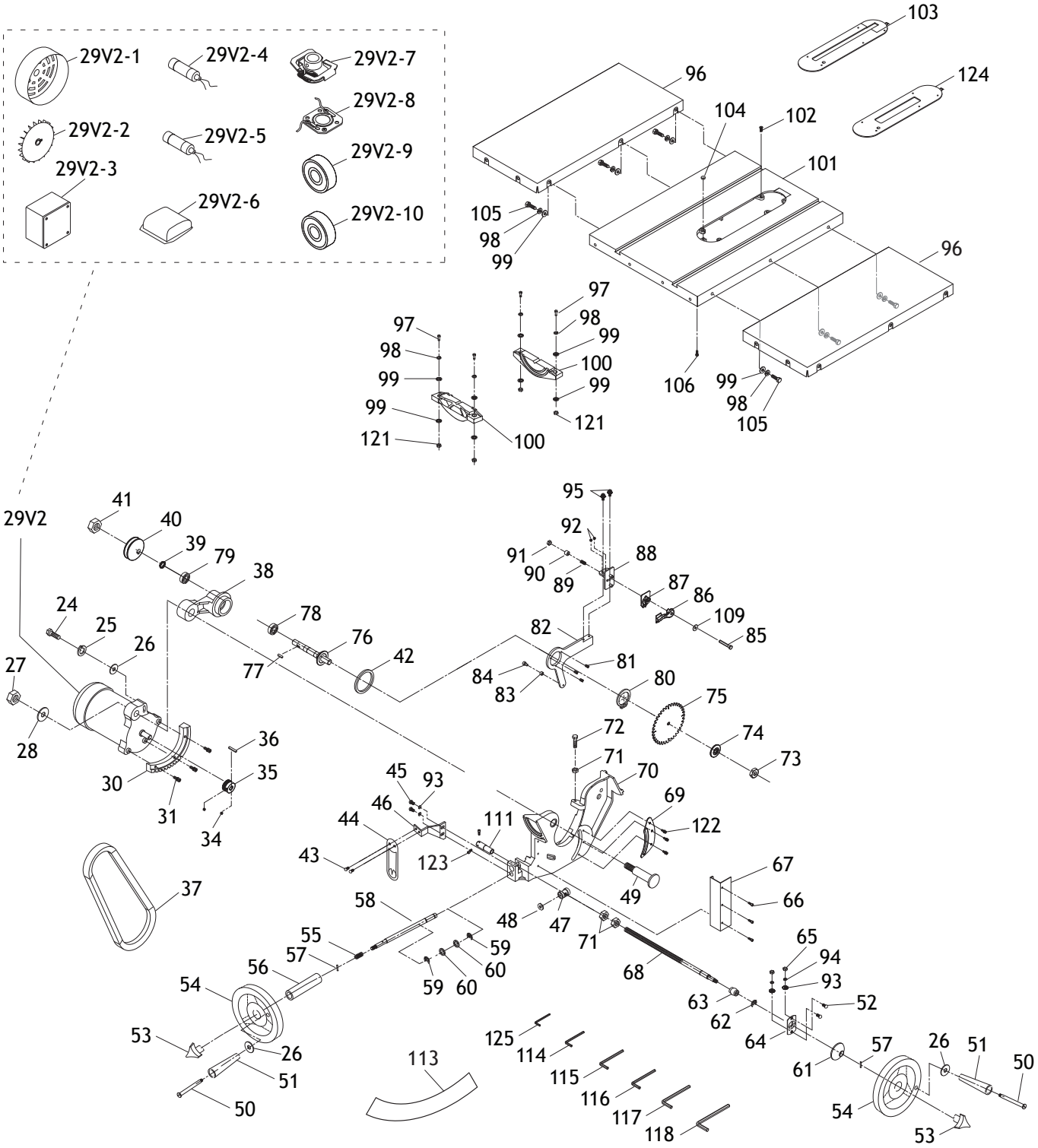
29V2-1
29V2-4
29V2-7
29V2-8
29V2-2
29V2-5
29V2-9
29V2-3
29V2-6
29V2-10
103
124
96
104
102
101
105
98
99
96
97
98
99
100
99
121
106
99
98
105
97
98
99
99
121
100
29V2
41
40
39
79
38
24
25
26
27
28
78
76
42
77
95
92
91
90
89
88
87
86
109
85
82
81
84
83
80
75
74
73
72
71
70
69
122
36
35
30
31
34
45
93
46
44
43
111
123
49
67
66
37
58
48
47
71
68
55
57
56
54
59
60
59
60
65
94
93
52
63
62
64
53
26
51
50
125
114
115
116
117
118
113
61
57
26
51
50
54
53

Main Parts List

REF	PART #	DESCRIPTION
24	X1837024	HEX BOLT M8-1.25 X 30
25	X1837025	LOCK WASHER 8MM
26	X1837026	FLAT WASHER 8MM
27	X1837027	LOCK NUT M16-2
28	X1837028	FLAT WASHER 16MM
29V2	X1837029V2	MOTOR 2HP 110V/220V 1-PH V2.02.21
29V2-1	X1837029V2-1	MOTOR FAN COVER
29V2-2	X1837029V2-2	MOTOR FAN
29V2-3	X1837029V2-3	MOTOR JUNCTION BOX
29V2-4	X1837029V2-4	R CAPACITOR 30M 350V 1-5/8 X 3-1/8
29V2-5	X1837029V2-5	S CAPACITOR 200M 250V 1-3/8 X 2-11/16
29V2-6	X1837029V2-6	CAPACITOR COVER
29V2-7	X1837029V2-7	CENTRIFUGAL SWITCH L19-15 4S
29V2-8	X1837029V2-8	CONTACT PLATE
29V2-9	X1837029V2-9	BALL BEARING 6203-2RS
29V2-10	X1837029V2-10	BALL BEARING 6202ZZ
30	X1837030	BULL GEAR
31	X1837031	CAP SCREW W/WASHER M6-1 X 25
34	X1837034	SET SCREW M5-.8 X 8
35	X1837035	MOTOR PULLEY J6 X 5/8" BORE
36	X1837036	KEY 5 X 5 X 30
37	X1837037	V-BELT 355J6 POLYFLEX
38	X1837038	BLADE BRACKET
39	X1837039	ARBOR BUSHING
40	X1837040	ARBOR PULLEY J6
41	X1837041	LOCK NUT M12-1.5
42	X1837042	SHIM WASHER
43	X1837043	PHLP HD SCR M4-.7 X 6
44	X1837044	BEVEL INDICATOR
45	X1837045	CAP SCREW M5-.8 X 8
46	X1837046	POINTER SEAT
47	X1837047	BEVEL NUT
48	X1837048	SHIM WASHER
49	X1837049	MAIN TRUNNION SHAFT
50	X1837050	SHOULDER SCREW M8-1.25 X 14, 9 X 100
51	X1837051	HANDWHEEL HANDLE 106MM SS
52	X1837052	CAP SCREW M5-.8 X 16
53	X1837053	LOCK HANDLE KNOB M8-1.25 3 LOBE
54	X1837054	HANDWHEEL TYPE-01 180D X 11K X M8-1.25
55	X1837055	COMPRESSION SPRING
56	X1837056	ELEVATION BUSHING
57	X1837057	ROLL PIN 3 X 20
58	X1837058	ELEVATION SHAFT
59	X1837059	E-CLIP 14MM
60	X1837060	SPACER
61	X1837061	BEVEL PLATE
62	X1837062	E-CLIP 9MM
63	X1837063	BALL BEARING 6201ZZ
64	X1837064	BEARING SEAT
65	X1837065	HEX NUT M5-.8
66	X1837066	CAP SCREW M5-.8 X 10
67	X1837067	BLADE GUARD

REF	PART #	DESCRIPTION
68	X1837068	TILT SHAFT
69	X1837069	RIVING GUIDE
70	X1837070	MAIN TRUNNION
71	X1837071	HEX NUT M8-1.25
72	X1837072	HEX BOLT M8-1.25 X 40
73	X1837073	ARBOR NUT 5/8-18
74	X1837074	BLADE FLANGE
75	X1837075	BLADE 10" X 5/8" X 40T
76	X1837076	ARBOR
77	X1837077	KEY 5 X 5 X 12
78	X1837078	BALL BEARING 6203ZZ
79	X1837079	BALL BEARING 6202ZZ
80	X1837080	EXT RETAINING RING 52MM
81	X1837081	CAP SCREW M5-.8 X 6
82	X1837082	MOUNTING PLATE
83	X1837083	BUSHING
84	X1837084	SHAFT PIN
85	X1837085	CLAMP LOCK BOLT M8-1.25 X 54
86	X1837086	RIVING KNIFE LOCK LEVER
87	X1837087	RIVING KNIFE CLAMP PLATE
88	X1837088	RIVING KNIFE MOUNTING BLOCK
89	X1837089	COMPRESSION SPRING 8 X 18MM
90	X1837090	BUSHING 8 X 10 X 12MM
91	X1837091	LOCK NUT M8-1.25
92	X1837092	SET SCREW M5-.8 X 10
93	X1837093	FLAT WASHER 5MM
94	X1837094	LOCK WASHER 5MM
95	X1837095	CAP SCREW W/WASHER M5-.8 X 16
96	X1837096	EXTENSION WING
97	X1837097	CAP SCREW M10-1.5 X 40
98	X1837098	LOCK WASHER 10MM
99	X1837099	FLAT WASHER 10MM
100	X1837100	TRUNNION
101	X1837101	MAIN TABLE
102	X1837102	FLAT HD SCR 8-32 X 1/2
103	X1837103	TABLE INSERT
104	X1837104	TABLE INSERT MAGNET
105	X1837105	CAP SCREW M10-1.5 X 25
106	X1837106	FLANGE BOLT M8-1.25 X 16
109	X1837109	FLAT WASHER 8MM
111	X1837111	90° LIMITING BLOCK
113	X1837113	BEVEL LABEL
114	X1837114	HEX WRENCH 3MM
115	X1837115	HEX WRENCH 4MM
116	X1837116	HEX WRENCH 5MM
117	X1837117	HEX WRENCH 6MM
118	X1837118	HEX WRENCH 8MM
121	X1837121	HEX NUT M10-1.5
122	X1837122	CAP SCREW W/WASHER M5-.8 X 10
123	X1837123	CAP SCREW M5-.8 X 10
124	X1837124	DADO TABLE INSERT
125	X1837125	HEX WRENCH 2.5MM

Cabinet & Stand

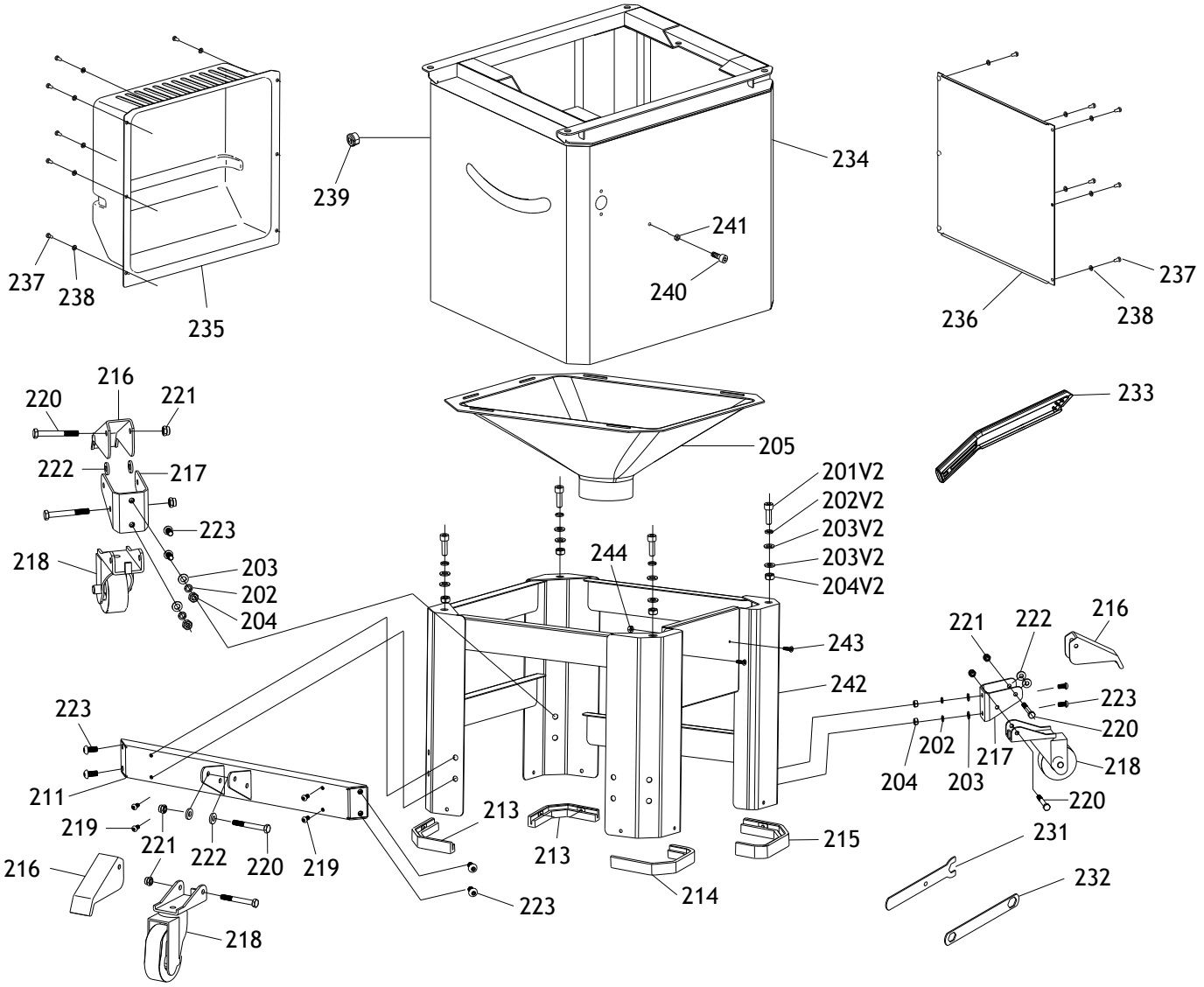

REF	PART #	DESCRIPTION
201V2	X1837201V2	CAP SCREW M10-1.5 X 40 V2.08.18
202	X1837202	LOCK WASHER 8MM
202V2	X1837202V2	LOCK WASHER 10MM V2.08.18
203	X1837203	FLAT WASHER 8MM
203V2	X1837203V2	FLAT WASHER 10MM V2.08.18
204	X1837204	HEX NUT M8-1.25
204V2	X1837204V2	HEX NUT M10-1.5 V2.08.18
205	X1837205	DUST CHUTE
211	X1837211	LEG BRACE W/CASTER MOUNT
213	X1837213	RUBBER FOOT BACK LEFT/RIGHT
214	X1837214	RUBBER FOOT FRONT LEFT
215	X1837215	RUBBER FOOT FRONT RIGHT
216	X1837216	FOOT LEVER
217	X1837217	CASTER SUPPORT BRACKET
218	X1837218	CASTER
219	X1837219	BUTTON HD CAP SCR M6-1 X 12
220	X1837220	HEX BOLT M8-1.25 X 65

REF	PART #	DESCRIPTION
221	X1837221	LOCK NUT M8-1.25
222	X1837222	FLAT WASHER 8MM
223	X1837223	BUTTON HD CAP SCREW M8-1.25 X 16
231	X1837231	ARBOR WRENCH 16 X 23MM OPEN-END
232	X1837232	ARBOR WRENCH 13 X 22MM CLOSED-ENDS
233	X1837233	PUSH STICK
234	X1837234	CABINET
235	X1837235	MOTOR COVER
236	X1837236	REAR ACCESS PANEL
237	X1837237	BUTTON HD CAP SCREW M5-.8 X 12
238	X1837238	FLAT WASHER 5MM
239	X1837239	STRAIN RELIEF 1/2"-3/8" SNAP-IN ST
240	X1837240	CAP SCREW M5-.8 X 25
241	X1837241	HEX NUT M5-.8
242	X1837242	STAND, 1-PIECE WELDED
243	X1837243	FLAT HD SCR M3-.5 X 16
244	X1837244	HEX NUT M3-.5

Fence & Rails

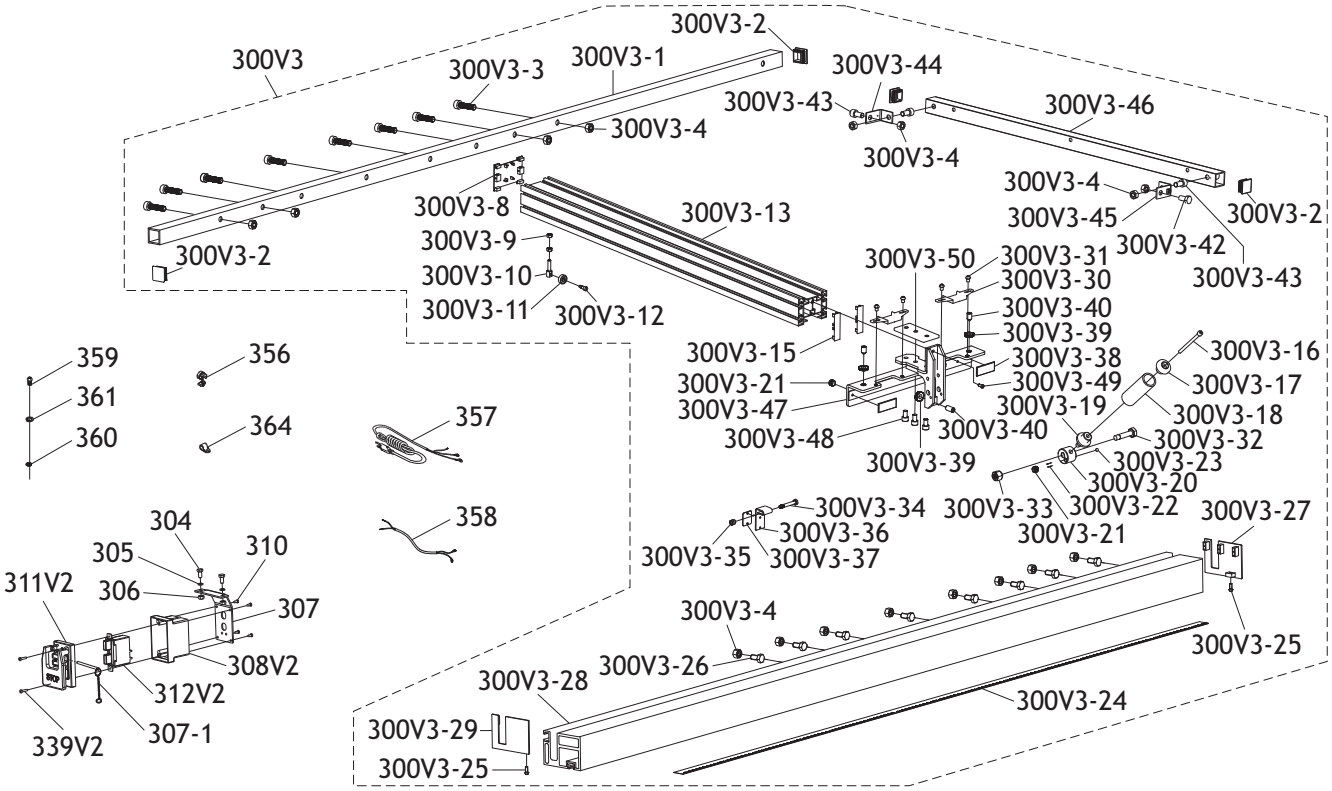

REF	PART #	DESCRIPTION
304	X1837304	HEX BOLT M8-1.25 X 16
305	X1837305	LOCK WASHER 8MM
306	X1837306	HEX NUT M8-1.25
307	X1837307	SWITCH BRACKET
307-1	X1837307-1	LOCKOUT PIN AND CHAIN
308V2	X1837308V2	SWITCH BOX V2.09.17
310	X1837310	TAP SCREW M4 X 14
311V2	X1837311V2	SWITCH PADDLE V2.09.17
312V2	X1837312V2	SWITCH KEDU HY56-3 V2.09.17
339V2	X1837339	TAP SCREW M4 X 25 V2.09.17
356	X1837356	STRAIN RELIEF 1/2"-3/8" SNAP-IN ST
357	X1837357	POWER CORD 14G 3W 72" 5-15P
358	X1837358	MOTOR CORD 14G 3W 39"
359	X1837359	PHLP HD SCR M5-.8 X 8
360	X1837360	LOCK WASHER 5MM
361	X1837361	INT TOOTH WASHER 5MM
364	X1837364	ADJUSTABLE CABLE CLAMP
300V3	X1837300V3	FENCE & RAIL ASSEMBLY V3.06.19
300V3-1	X1837300V3-1	REAR RAIL
300V3-2	X1837300V3-2	REAR RAIL CAP
300V3-3	X1837300V3-3	CAP SCREW M8-1.25 X 25
300V3-4	X1837300V3-4	HEX NUT M8-1.25
300V3-8	X1837300V3-8	FENCE ASSEMBLY CAP
300V3-9	X1837300V3-9	HEX NUT M6-1
300V3-10	X1837300V3-10	LIMIT SHAFT M6-1
300V3-11	X1837300V3-11	BALL BEARING 696-2RS
300V3-12	X1837300V3-12	CAP SCREW M5-.8 X 12
300V3-13	X1837300V3-13	FENCE BASE
300V3-15	X1837300V3-15	FENCE FACE CAP
300V3-16	X1837300V3-16	CAP SCREW M8-1.25 X 85
300V3-17	X1837300V3-17	FENCE HANDLE END COVER
300V3-18	X1837300V3-18	FENCE HANDLE 90L X 32OD X 19ID

REF	PART #	DESCRIPTION
300V3-19	X1837300V3-19	HANDLE BASE SCR M8-1.25 X 8, 11 X 11
300V3-20	X1837300V3-20	FENCE HANDLE CAM
300V3-21	X1837300V3-21	SET SCREW M8-1.25 X 8
300V3-22	X1837300V3-22	COMPRESSION SPRING 0.8 X 5 X 15MM
300V3-23	X1837300V3-23	STEEL BALL 6MM
300V3-24	X1837300V3-24	SCALE LABEL 1620 X 20MM
300V3-25	X1837300V3-25	TAP SCREW 3.5 X 9.5
300V3-26	X1837300V3-26	HEX BOLT M8-1.25 X 25
300V3-27	X1837300V3-27	FRONT RAIL CAP (R)
300V3-28	X1837300V3-28	FRONT RAIL
300V3-29	X1837300V3-29	FRONT RAIL CAP (L)
300V3-30	X1837300V3-30	INDICATOR
300V3-31	X1837300V3-31	PHLP HD SCR M6-1 X 8
300V3-32	X1837300V3-32	HEX BOLT M10-1.5 X 45
300V3-33	X1837300V3-33	LOCK NUT M10-1.5
300V3-34	X1837300V3-34	HEX BOLT M6-1 X 40
300V3-35	X1837300V3-35	LOCK NUT M6-1
300V3-36	X1837300V3-36	SPRING PLATE
300V3-37	X1837300V3-37	SLIDE PLATE 30 X 24 X 2
300V3-38	X1837300V3-38	SLIDE PLATE 50 X 20 X 2
300V3-39	X1837300V3-39	KNURLED NUT M10-1.5
300V3-40	X1837300V3-40	SET SCREW M10-1.5 X 15, NYLON TIP
300V3-42	X1837300V3-42	HEX BOLT M8-1.25 X 16
300V3-43	X1837300V3-43	CAP SCREW M8-1.25 X 16
300V3-44	X1837300V3-44	CONNECTION PLATE (L)
300V3-45	X1837300V3-45	CONNECTION PLATE (R)
300V3-46	X1837300V3-46	RAIL BRACE
300V3-47	X1837300V3-47	FENCE FIXED SEAT
300V3-48	X1837300V3-48	CAP SCREW M8-1.25 X 16
300V3-49	X1837300V3-49	TAP SCREW M4.2 X 13
300V3-50	X1837300V3-50	FENCE PLATE

Blade Guard

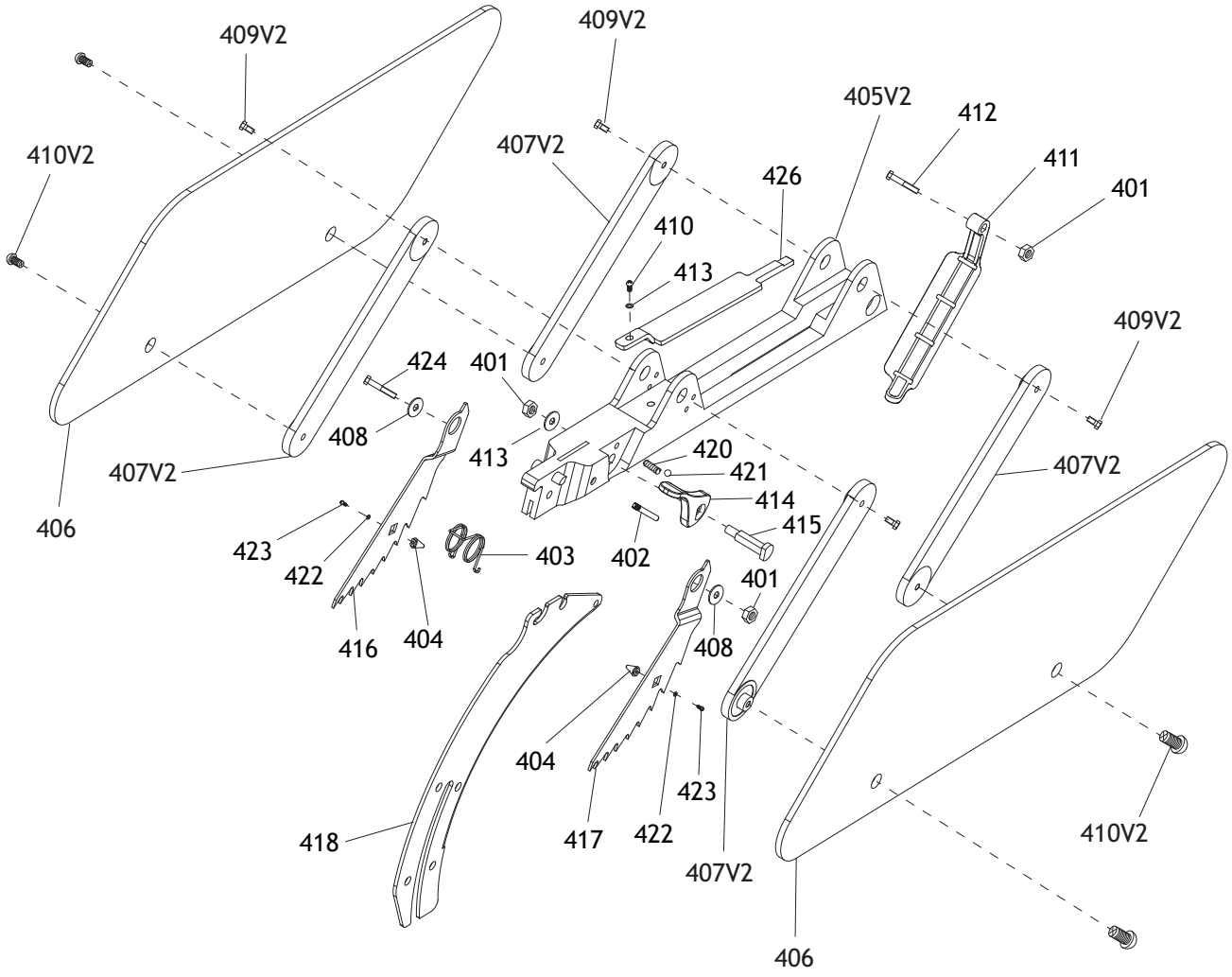

REF	PART #	DESCRIPTION
401	X1837401	LOCK NUT M5-.8
402	X1837402	SET PIN
403	X1837403	TORSION SPRING
404	X1837404	SCREW CAP
405V2	X1837405V2	BLADE GUARD BODY V2.02.21
406	X1837406	BARRIER
407V2	X1837407V2	BARRIER CONNECTING BAR V2.02.21
408	X1837408	FLAT WASHER 5MM
409V2	X1837409V2	SHOULDER SCR M5-.8 X 10, 7 X 5 V2.02.21
410	X1837410	PHLP HD SCR M5-.8 X 10
410V2	X1837410V2	SHOULDER SCREW M6-1 X 10, 8 X 4 V2.02.21
411	X1837411	GUARD RAIL

REF	PART #	DESCRIPTION
412	X1837412	PHLP HD SCR M5-.8 X 25
413	X1837413	FLAT WASHER 5MM
414	X1837414	BLADE GUARD LOCK LEVER
415	X1837415	BLADE GUARD LOCK LEVER SCREW
416	X1837416	ANTI-KICKBACK PAWL (L)
417	X1837417	ANTI-KICKBACK PAWL (R)
418	X1837418	SPREADER/RIVING KNIFE
420	X1837420	COMPRESSION SPRING
421	X1837421	STEEL BALL 4MM
422	X1837422	FLAT WASHER 3MM
423	X1837423	TAP SCREW M3 X 6

Miter Gauge

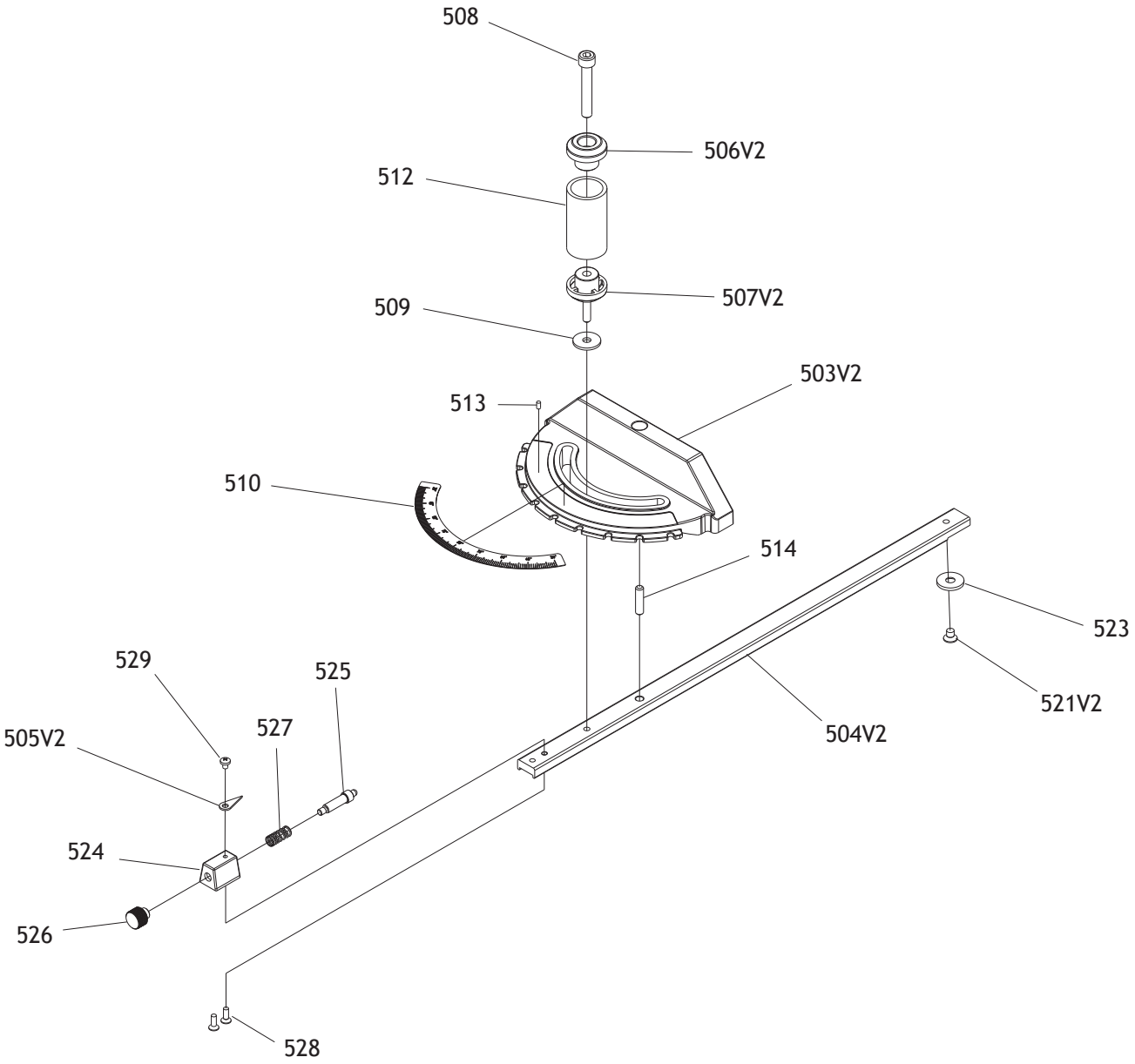

REF	PART #	DESCRIPTION
503V2	X1837503V2	MITER GAUGE BODY V2.04.22
504V2	X1837504V2	MITER BAR V2.04.22
505V2	X1837505V2	ANGLE INDICATOR V2.04.22
506V2	X1837506V2	UPPER HANDLE CAP V2.04.22
507V2	X1837507V2	LOWER HANDLE CAP V2.04.22
508V2	X1837508V2	CAP SCREW M8-1.25 X 55 V2.04.22
509	X1837509	HANDLE WASHER 6 X 20
510	X1837510	MITER SCALE
512	X1837512	MITER HANDLE
513	X1837513	RIVET 2 X 5MM

REF	PART #	DESCRIPTION
514	X1837514	MITER PIN
521V2	X1837521V2	FLAT HD SCR M6-1 X 8 V2.04.22
523	X1837523	MITER BAR GUIDE WASHER
524	X1837524	ANGLE INDICATOR SEAT
525	X1837525	STOP PIN
526	X1837526	STOP PIN KNOB
527	X1837527	COMPRESSION SPRING 0.5 X 9.5 X 24
528	X1837528	PHLP HD SCR M4-.7 X 10
529	X1837529	PHLP HD SCR M4-.7 X 6

Labels & Cosmetics

REF	PART #	DESCRIPTION
601	X1837601	ELECTRICITY LABEL
602	X1837602	DISCONNECT POWER LABEL
603	X1837603	BLADE GUARD LABEL
604	X1837604	MACHINE ID LABEL
605	X1837605	EYE/LUNG HAZARD LABEL

REF	PART #	DESCRIPTION
606	X1837606	SHOP FOX NAMEPLATE
607	X1837607	MODEL NUMBER LABEL
608	X1837608	READ MANUAL LABEL
609	X1837609	TABLE SAW WARNING LABEL
610	X1837610	KICKBACK HAZARD LABEL

⚠WARNING

Safety labels warn about machine hazards and how to prevent serious personal injury. The owner of this machine MUST maintain the original location and readability of all labels on this machine. If any label is removed or becomes unreadable, REPLACE that label before allowing machine to be operated again. Contact us at (360) 734-3482 or www.shopfoxtools.com to order new labels.