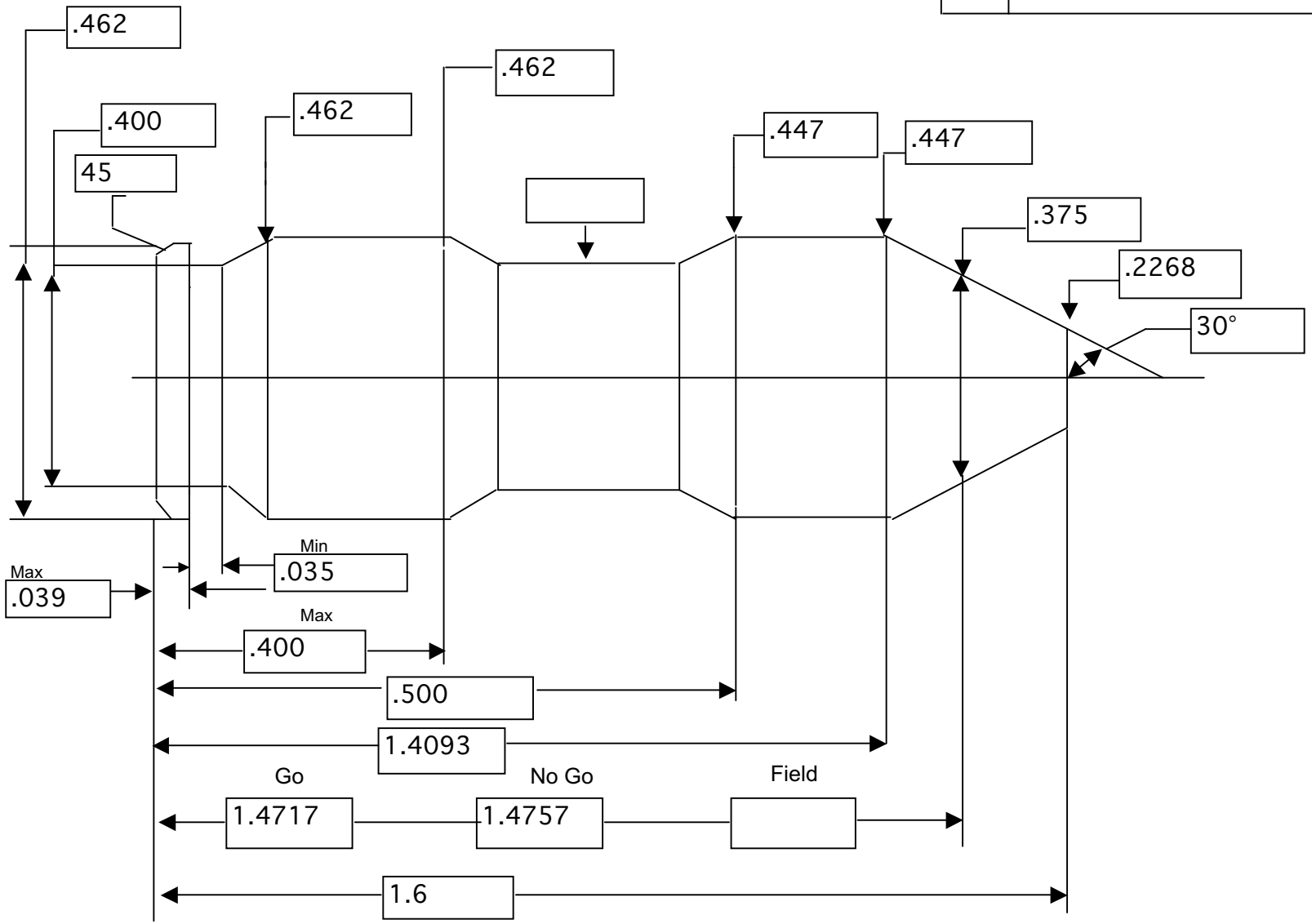	Revisions		
LTR.	Descirption	Date	Approved
	6mm-47 Lapua & 6.5mm-47 Lapua		DK
	Grizzly Industrial - T10199 & T10200	2/3/12